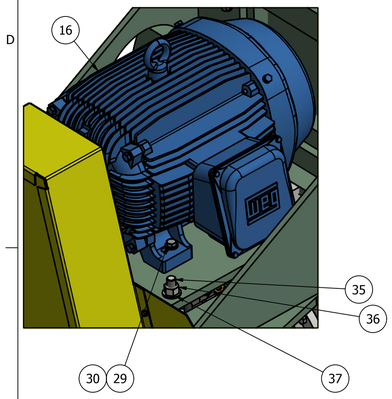

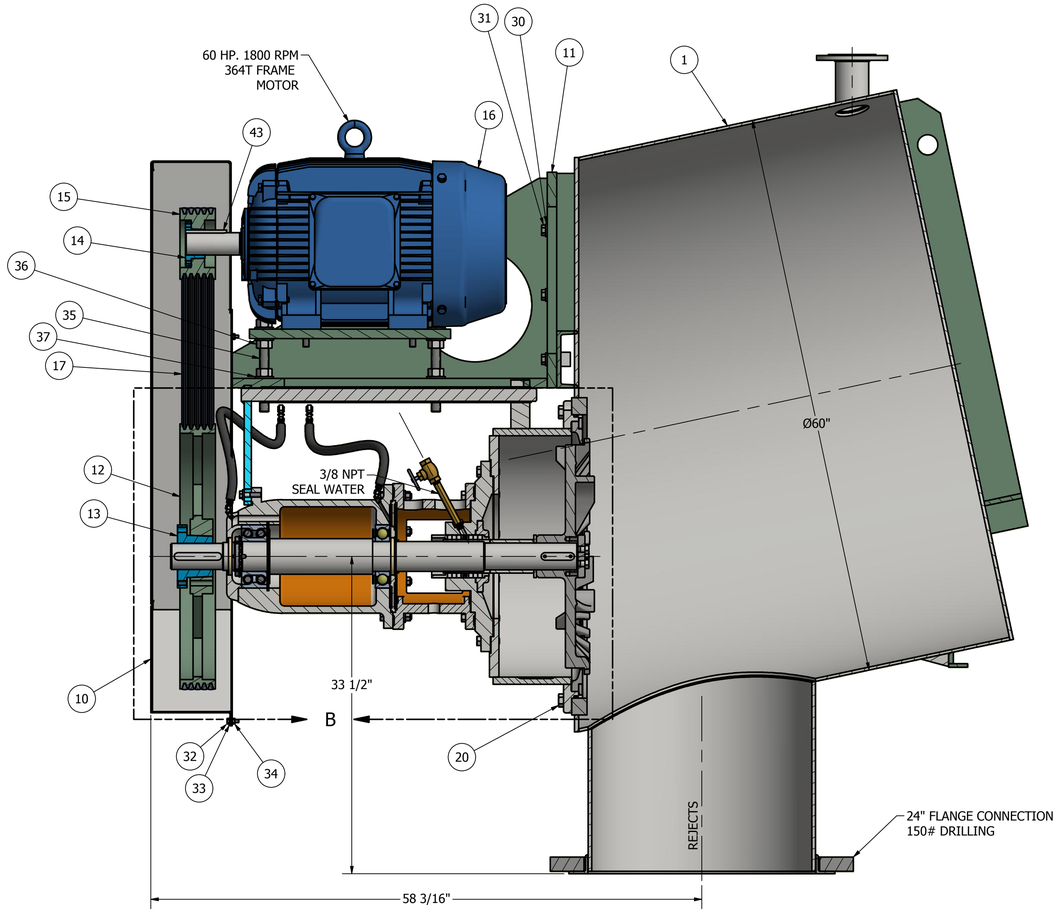

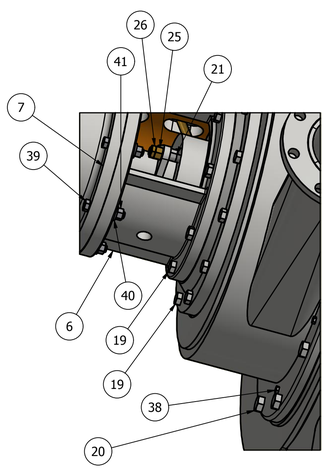

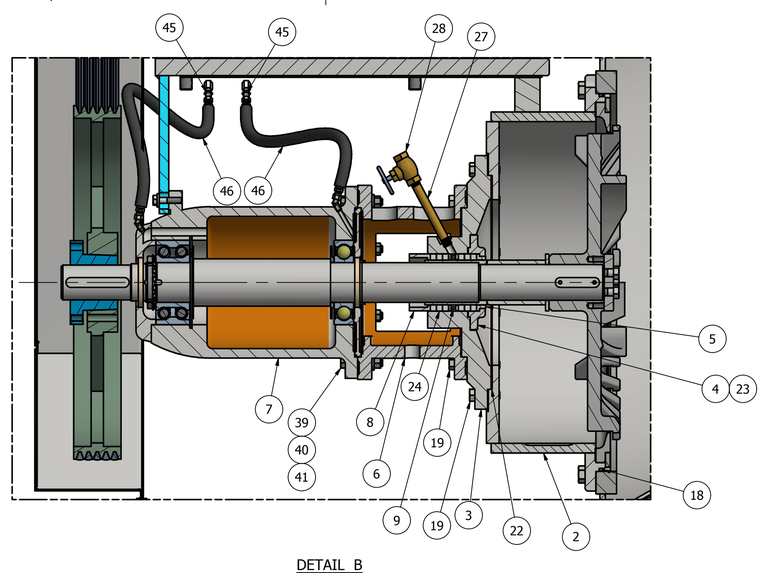

DETAIL B

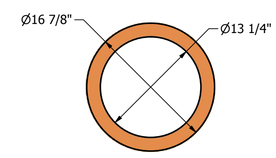

DETAIL ITEM #22
(1) REQ., 3/32" TK., BUNA-N

PARTS LIST

ITEM	QTY	MATERIAL	PART NUMBER	DESCRIPTION	NEW	RE-USE	BY CUST.
1	1	S.S.	550-D-1659	BODY (REPAIRED)		X	
2	1	Stainless Steel	550-D-1457	ROTOR HOUSING		X	
3	1	Stainless	550-C-853	STUFFING BOX		X	
4	1	Stainless	550-B-590	CAP, STUFFING BOX		X	
5	1	Stainless	550-A-413	RETAINER, PACKING RING		X	
6	1	Cast Iron	550-C-858	HOUSING, STUFFING BOX		X	
7	1		550-D-1454	ASSEMBLY, DRIVE (REBUILT)		X	
8	1	Stainless	550-B-591	GLAND, PACKING		X	
9	1	PTFE	550-B-592	RING, LANTERN	X		
10	1	Steel	550-C-857	GUARD, BELT	X		
11	1	Steel, Carbon	550-C-1054	MOTOR MOUNT/SUPPORT BRACKET (REPAIRED)		X	
12	1	Steel		5V-D-QD Sheave			X
13	1	Steel		F Type-QD Bushing			X
14	1	Steel		SF Type-QD Bushing			X
15	1	Steel		5V-D-QD Sheave			X
16	1			MOTOR, 364T FRAME			X
17	5	Rubber		BELT, 5VX 1250			X
18	1	Buna-N		O-RING, 8MM SECT. X 29.313" ID	X		
19	20	Stainless		H.H.C.S., M16 X 2 X 50 LG	X		
20	10	Stainless		H.H.C.S., M20 X 2.5 X 50 LG	X		
21	2	Stainless		FULLY THREADED STUDM16 X 2 X 80 LG	X		
22	1	Rubber		GASKET. 080" TK.	X		
23	4	S.S.		H.H.C.S., M8 X 1.25 X 30 LG	X		
24	6			PACKING RING, 1/2" SQUARE X 12-11/16" LG	X		
25	2	Brass		HEX NUT, M16 X 2	X		
26	2	Brass		HEX JAM NUT, M16 X 2	X		
27	1	Brass		NIPPLE 3/8" NPT BOTH ENDS X 6" LG	X		
28	1	BRONZE		Globe Valve, 3/8" NPT	X		
29	4	Steel		H.H.C.S., M16 X 2 X 90 LG	X		
30	10	Steel		WASHER, 16MM	X		
31	6	Steel		H.H.C.S., M16 X 2 X 35MM LG	X		
32	5	Steel		H.H.C.S., 5/16"-18 X 1" LG	X		
33	5	Steel		WASHER, 5/16"	X		
34	5	Steel		HEX NUT, 5/16"-18	X		
35	4	Stainless		THREADED ROD, 1"-8 X 12" LG	X		
36	16	Steel		HEX NUT, 1"-8	X		
37	16	Steel		FLAT WASHER FOR 24MM BOLT	X		
38	8	S.S.		H.H.C.S., M8 X 1.25 X 50 LG	X		
39	8	Steel		H.H.C.S., M14 X 2 X 75	X		
40	8	Steel		WASHER, 14MM	X		
41	8	Steel		HEX NUT, M14 X 2	X		
42	4	Steel		HEX NUT, M16 X 2	X		
43	1	Steel		KEY, MOTOR SHAFT			X
45	2	Stainless Steel		BULKHEAD FTG - 1/8"-27 FEMALE NPT TO 7/16"-20 MALE JIC	X		
46	2	RUBBER		HOSE ASSEMBLY, 7/16-20 JIC FEMALE SWIVEL, BOTH ENDS	X		

REF. FIBERPREP INSTALLATION DWG. #D SJC2-2513
REF. FIBERPREP DRIVE ASSY' DWG. #D SJC2-0961

JOB #56340-O (CAN-AM)

CONFIDENTIAL
THIS DRAWING AND THE ARTICLE(S) IT DEPICTS ARE THE PROPERTY OF MTR ENTERPRISES, LLC. THEY MAY NOT BE DISCLOSED OR USED BY ANYONE WITHOUT THE EXPRESSED WRITTEN CONSENT OF MTR ENTERPRISES, LLC.

WEIGHT (pounds): 5744.734 lbmass

STANDARD TOLERANCE UNLESS OTHERWISE SPECIFIED
ONE (1) DECIMAL DIM. +/- 0.060" | ANGLES +/- 1/2°
TWO (2) DECIMAL DIM. +/- 0.010" | UNFINISHED SURFACES +/- 0.125"
THREE (3) DECIMAL DIM. +/- 0.003" | FRACTIONAL DIM. +/- 1/32"

NO FINISH NORMALLY REQUIRED, CLEAN UP ONLY TO MAINTAIN DIMENSIONAL STABILITY OR TO REMOVE GLOBAL SURFACE IRREGULARITIES.

MTR Martco
New Components - Rebuilds - Repairs

TITLE SCAVENGER II - FIBERPREP CONTINUOUS

DRAWN BY	DRAWN DATE	CHK BY	CHK DATE	DWG. NO.	REV.
Dan Miller	7/23/2019			550-D-1660	

SHEET 1 OF 2