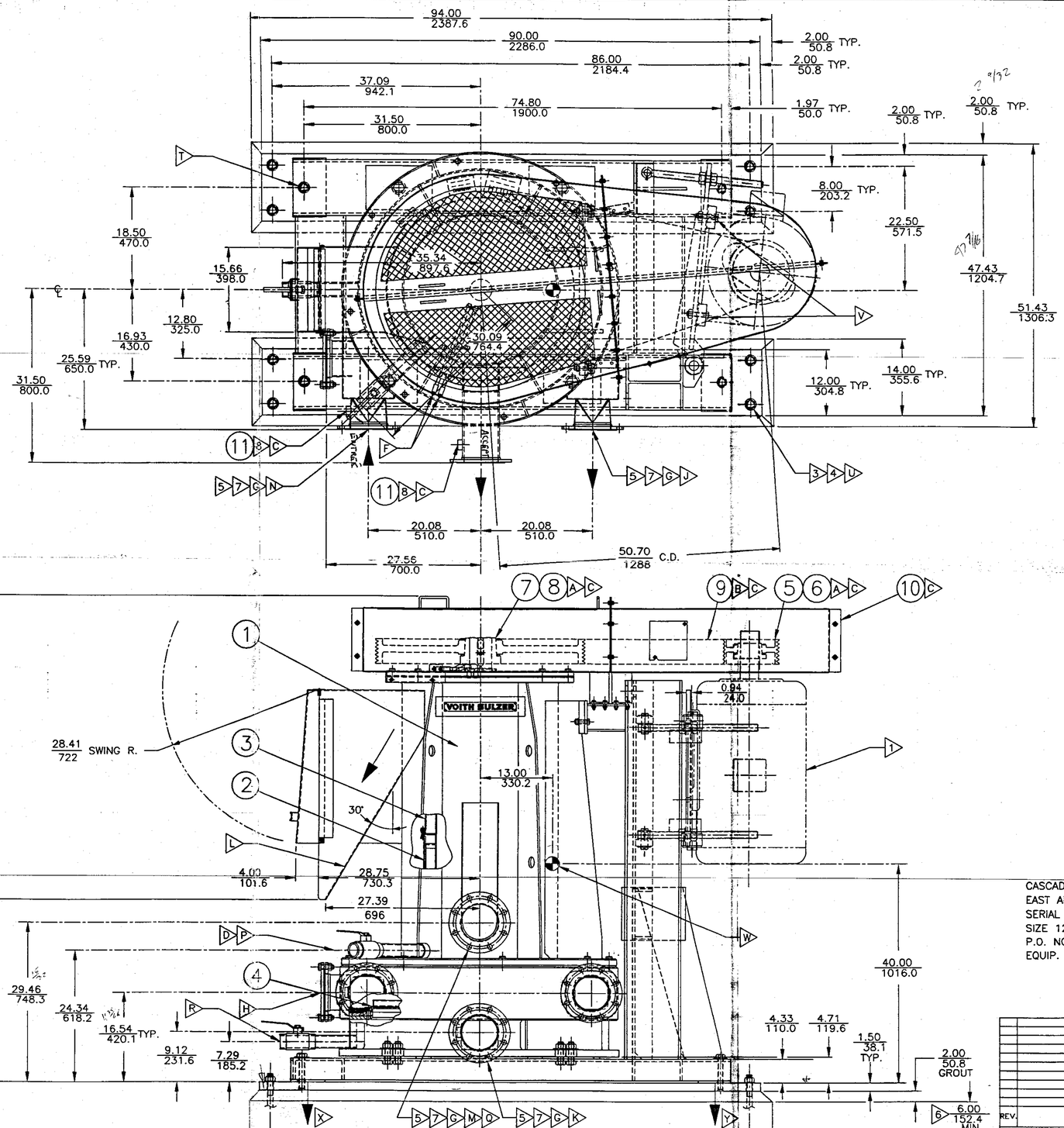

CASCADES INC.
EAST ANGUS, QUEBEC
SERIAL NO. 3709
SIZE 12 COMBISORTER
P.O. NO. 55175
EQUIP. NO.

SUPPLIED BY VOITH SULZER

ITEM	PART NUMBER	DESCRIPTION	DRAWING NUMBER	QTY
1	200089	COMBISORTER SIZE 12 316L	D28-100001	1
2	116506	BSKT SCRN 316 COMBISORTER LWR 2.40 mm HOLE 26.60% O.A., CP	07.0878.10	1
3	116505	BSKT SCRN 316 COMBISORTER UPR 2.40 mm HOLE 27.60% O.A., CP	07.0860.80	1
4	113737	PL SCRN DISK 316L COMBISORTER 2.60 mm HOLE 26.60% O.A., CP	07.0873.31	1
5	104126	SHV 6GV 5V10.3 OD QD		1
6	106571	BSHG QD E TYPE 3.375 SHAFT W/ 0.875 X 0.500 KEY (SHALLOW)		1
7	116895	SHV 6GV 5V37.50 OD QD		1
8	112780	BSHG QD J TYPE M100 H7mm BORE W/ 28 P9 mm X 6.00 mm KEYWAY		1
9	113840	BELT PWR BAND 3/5VX1800		2
10	118459	ASSY GUARD DRIVE COMBISORTER W/ HARDWARE	D28-724006	1
11	111118	WELD-ON NIPPLE (PMC-LT-07-SAN) FOR USE WITH PMC OR EQUIVALENT PRESSURE MEASURING INSTRUMENTS		2

SUPPLIED BY CUSTOMER

1. MOTOR 125 HP, 1800 RPM, 444T FRAME, 1.15 SF WITH CONTROLS AND WIRING
2. SOLEPLATES
3. ANCHOR BOLTS
4. SHIMS WITH AMPLE SUPPORT AREA
5. INLET, ACCEPT AND REJECT PIPNG WITH SUPPORTS
6. FOUNDATION, ERECTION, AND INSTALLATION
7. FABRICATION TOLERANCES APPLY TO NOZZLE LOCATIONAL DIMENSIONS. CUSTOMER MUST PROVIDE LOOSE ANGLE STYLE FACE RINGS AND SUFFICIENT NUMBER OF FIELD FIT JOINTS IN ADJOINING PIPING TO ACCOMMODATE MINOR VARIATIONS IN TRUE POSITION.
8. PMC (OR EQUIVALENT) GAUGES OR TRANSMITTERS

NOTES

A. ALIGN DRIVE & DRIVEN SHEAVES TO MANUFACTURER'S SPECIFICATIONS.
B. TENSION BELTS TO MANUFACTURER'S SPECIFICATIONS.
C. CUSTOMER IS RESPONSIBLE FOR THE INSTALLATION OF:
   1. DRIVE SHEAVE AND BELTS
   2. PMC (OR EQUIVALENT) GAUGES OR TRANSMITTERS
   3. DRIVE GUARD
D. CUSTOMER TO SUPPLY DILUTION WATER 80 GPM MAX. 25 GPM MIN. MIN. PSI. TO OVERCOME 3 FT. STATIC HEAD, MAX. 7 PSI.
E. MACHINE WEIGHT INCLUDING MOTOR: 9100 LBS EMPTY & 10,200 LBS FULL ROTATING ASSY WEIGHT, 1100 LBS. ADDITION FOR DYNAMIC LOADS 200%.
F. GREASE FITTINGS FOR UPPER & LOWER BEARINGS.
G. CUSTOMER TO SUPPORT PIPING TO PREVENT ANY EXTERNAL LOADING ON THE COMBISORTER.
H. INSPECTION OPENING
J. HEAVY REJECT OUTLET, SCREEN DISC, 6.00 PIPE VAN STONE (150# DRILL).
K. ACCEPT, SCREEN DISK, 6.00 PIPE VAN STONE (150# DRILL).
L. HEAVY REJECT OUTLET, SCREEN BASKETS, TROUGH.
M. ACCEPT, SCREEN BASKETS, 6.00 PIPE VAN STONE (150# DRILL).
N. INLET 6.00 PIPE VAN STONE (150# DRILL).
P. BALL VALVE DILUTION 2.00 NPT (1000 PSI COLD).
Q. GRAVITY DRAIN LINE. SLOPE PIPING DOWNWARD TO PROMOTE DRAINING.
R. BALL VALVE DISCHARGE 2.00 NPT (1000 PSI COLD).
S. MINIMUM OVERHEAD CLEARANCE REQUIRED TO REMOVE THE UPPER HOUSING. HOOK AND HOIST NOT INCLUDED. MIN. LIFTING WEIGHT 3000 LBS.
T. 1.12 DIA. HOLE THRU (4 PLACES) HARDWARE BY CUSTOMER.
U. 1.19 DIA. HOLE THRU (8 PLACES) HARDWARE BY CUSTOMER.
V. 0.81 DIA. HOLE THRU (4 PLACES) HARDWARE BY CUSTOMER.
W. APPROXIMATE LOCATION FOR FULL WEIGHT CENTER OF GRAVITY.
X. FULL WEIGHT FORCE 4100 LBS TOTAL, 2050 LBS PER PAD.
Y. FULL WEIGHT FORCE 6100 LBS TOTAL, 3050 LBS PER PAD.
Z. DIMENSIONS ARE INCHES/MM

CERTIFIED

REV.	DESCRIPTION	REV. SYM.	NO. OF PLACES	DATE	NAME	CHECK

THE DATA CONTAINED HEREIN IS PROPRIETARY AND CONFIDENTIAL. REPRODUCTION, PUBLICATION OR DISTRIBUTION OF ANY PART REQUIRES WRITTEN CONSENT OF VOITH SULZER PAPER TECHNOLOGY NORTH AMERICA INC. THIS DATA IS THE PROPERTY OF VOITH SULZER PAPER TECHNOLOGY NORTH AMERICA INC, AND ITS POSSESSION CONFERS NO LICENSE TO USE OR TO DISCLOSE IT TO OTHERS FOR ANY PURPOSE WHATSOEVER. ALL RIGHTS RESERVED.

PROJECTION

1995	DATE	NAME
DR.	6/30	DJG
CH.	6/30	MRM
AP.	6/30	SFS
REF.		

VOITH SULZER
PAPERTECHNOLOGY

TITLE: INSTALLATION DETAILS
SIZE 12 COMBISORTER

CODE:VERB/UNIT: 1280-1

SIZE: D | ITEM NO. | DWG. NO. D28-130054

VOITH SULZER PAPER TECHNOLOGY NORTH AMERICA INC WAUPELA WA 98940

SCALE: 1:10 | WEIGHT: LBS | SHEET: 1 OF 1