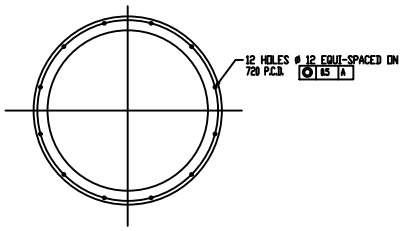

IBC OUTLET FLANGE

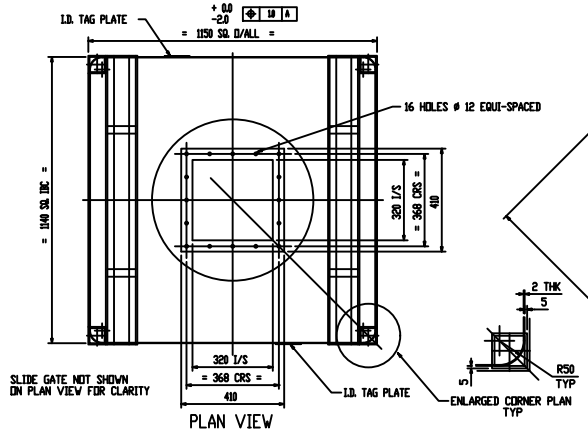

PLAN VIEW

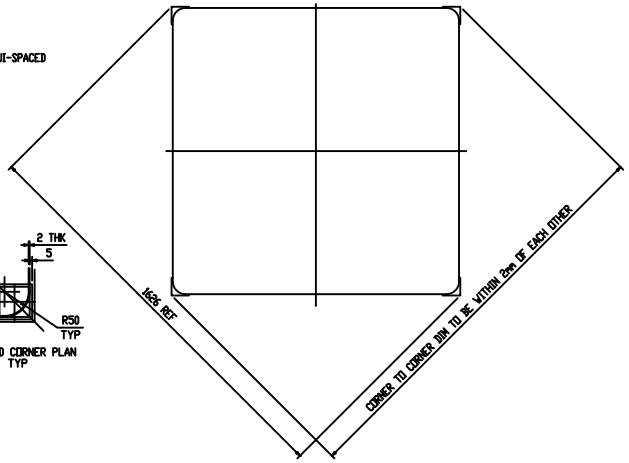

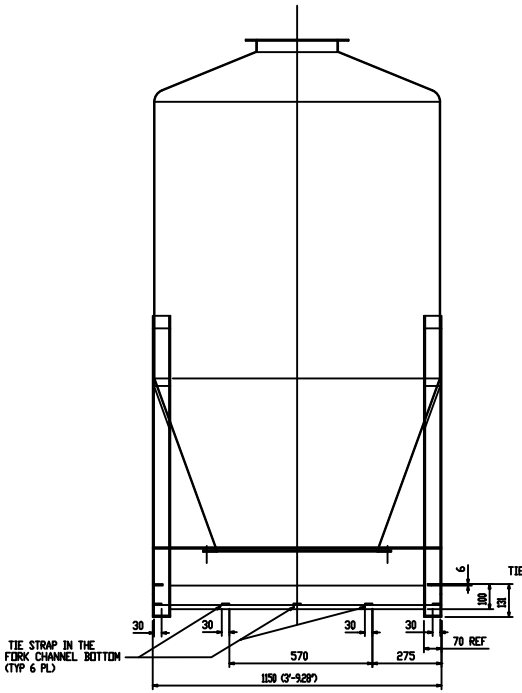

SIDE VIEW

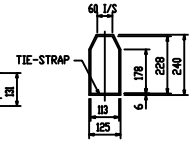

FORK CHANNEL

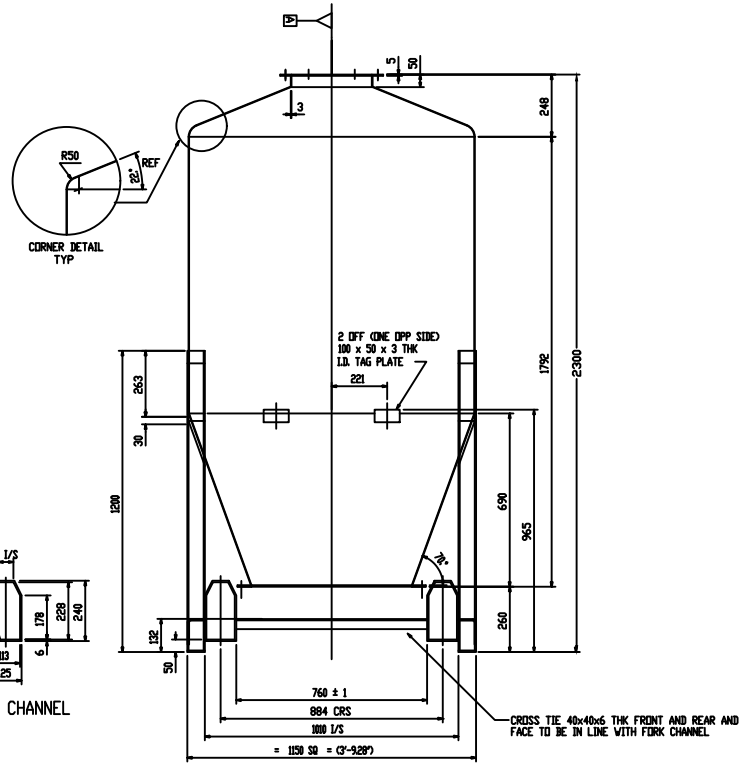

FRONT VIEW

MATERIAL OF CONSTRUCTION:
ALL 304 ST.ST.
INTERNAL WELDS: GROUND SMOOTH & FLUSH
INTERIOR: POLISHED TO A NUMBER 4 FINISH
EXTERNAL WELDS: GROUND SMOOTH
EXTERNALS: 2B COLD ROLLED FINISH

GENERAL NOTES:
ALL WELDS TO BE CONTINUOUS/GROUND SMOOTH
AND BRUSHED WITH NEW SS BRUSH
IBC WELDS TO BE CRACK AND CREVICE FREE
& PICKLE AND PASSIVATE

	SEE NOTES	MB	S.PATEL	090197
	SEE NOTES			

96248 - 37 - A

GENERAL ARRANGEMENT OF IBC
70 Cu.ft.(2 Cu.m) CAPACITY