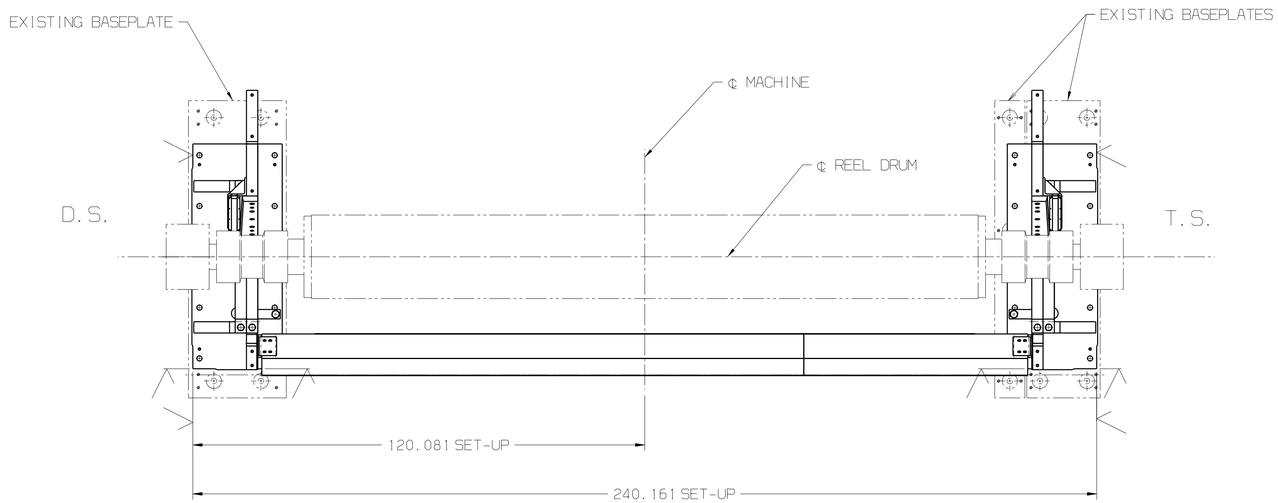

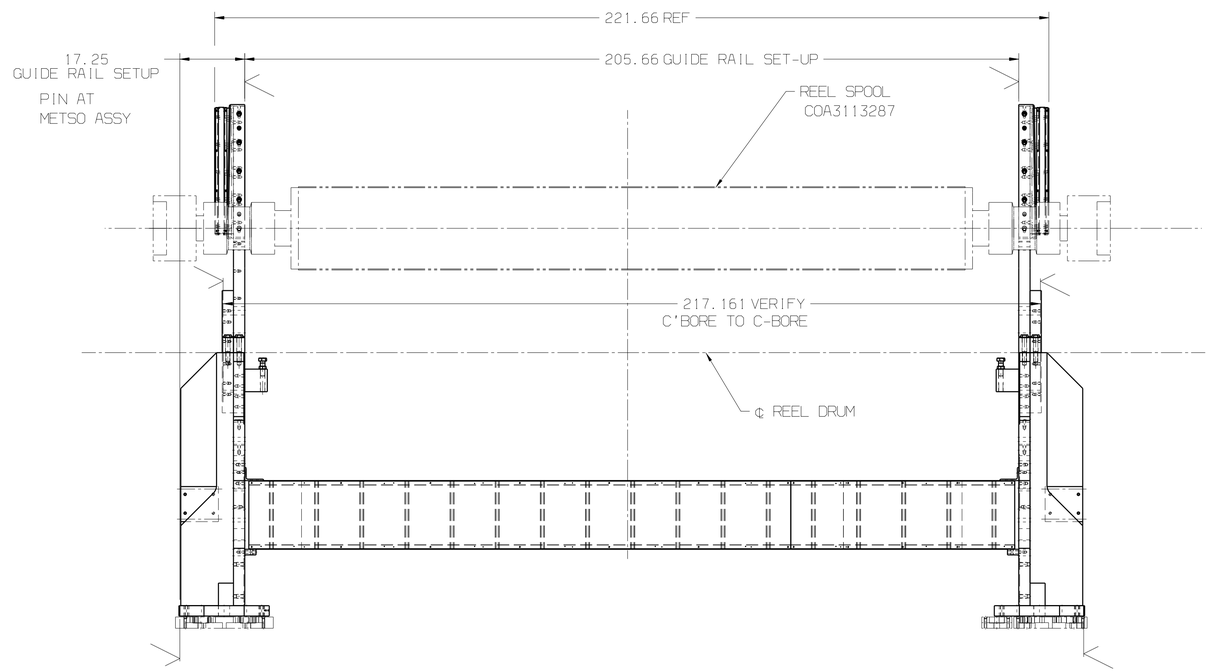

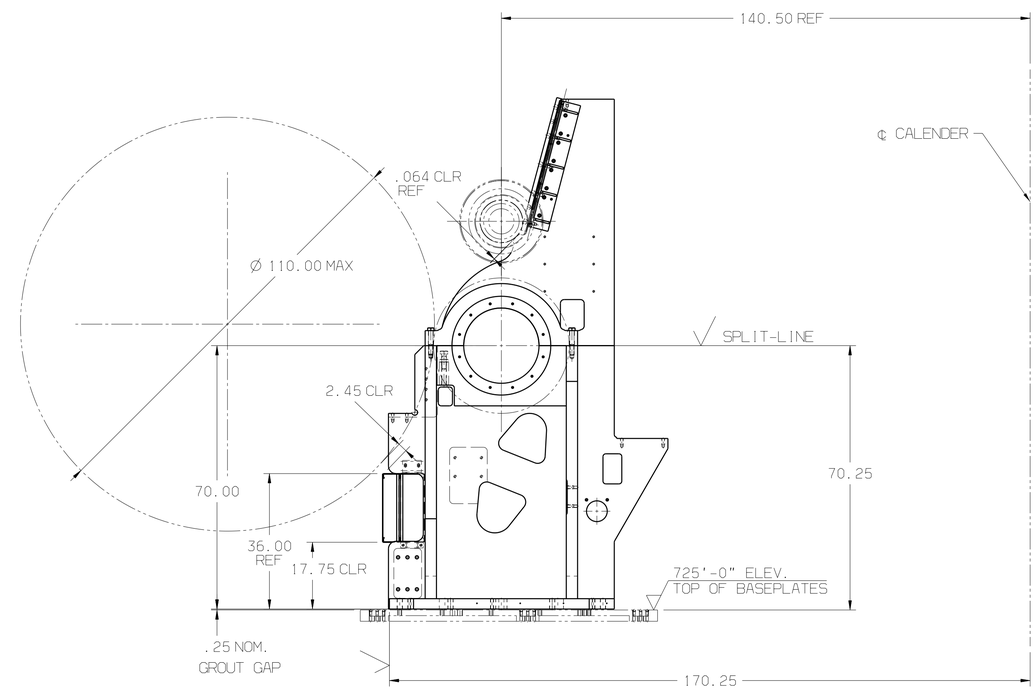

THE INFORMATION CONTAINED HEREIN IS PROPRIETARY TO METSO PAPER AND IS NOT TO BE REPRODUCED OR USED WITHOUT THE WRITTEN PERMISSION OF VALMET

120CT07	DRS	JSK	AECN005807: ADDED PIPE CHASE, & OTHER MISC		A
DATE:	NAME:	APPD:	REVISION:	ZONE:	KEY:

TOLERANCES UNLESS SPECIFIED

FUNCTION	2 PLACE DECIMAL		3 PLACE DECIMAL		ANGULAR
	0 -24	OVER 24	0 -24	OVER 24	
MACHINING	±.015	±.030	±.005	±.010	±.5 DEG
WELDMENT	±.030	±.060			±1 DEG

metso paper

PROJECTION: ANSI | SCALE: 1/20 | WEIGHT (Kg): 6640

APPLETON PAPERS
WEST CARROLLTON, OH, USA
PM92

PRODUCT: FRAME, REEL DRUM

DES'D	DRS	DATE 24SEP2007
CHK'D	JSK	DATE 28SEP2007
APP'D	JSK	DATE 28SEP2007

REF. | SUPERS. | D

WORK: SURF | FILE: 2551 | V5

DRAWING ID: APL2009996 | SHEET: 2

CERTIFIED 21DEC2007