CONVERSION FACTORS

Force and Weight

Grams x .0353 = Ounces
Kilograms x 2.205 = Pounds
Newtons x .2248 = Pounds (Force)
Ounces x 28.35 = Grams
Pounds (Force) x 4.448 = Newtons

Torque

Newton Meters x .7376 = Pound Feet
Newton Meters x 8.851 = Pound Inches
Pound Feet x 1.3558 = Newton Meters
Pound Inches x .113 = Newton Meters

Pressure

1 Bar = 14.500 P.S.I.

Measure

1 MM = .040"
25.4MM = 1 Inch

Copyright

Manufacturer's name and address

VOITH SULZER Stoffaufbereitung GmbH

Postfach 2120
D-88191 Ravensburg
Telephone: (0751) 8301
Telefax: (0751) 832280
Telex: 732901

VOITH SULZER Stoffaufbereitung GmbH
Betriebsstätte Heidenheim
Postfach 1970
D-89509 Heidenheim
Telephone: (07321) 370
Telefax: (07321) 37-70 00
Telex: 714799-0 VH D

Version

November 1995

Table of Contents

List of Figures

List of Tables

1 Introduction

These operating instructions are to familiarize the user with the machine. They contain a description of the machine's design and its principle of operation. Following these operating instructions ensures rapid and safe start-up and maintenance of the machine.

1.1 Explanation of warnings and symbols

This symbol indicates an **imminent hazard.** If this hazard is not avoided, it will lead to **death or serious injuries**.

This symbol indicates a **potentially hazardous situation**. If it is not avoided, it **could result in death or serious injuries**.

This symbol indicates a **potentially hazardous situation**. If it avoided, it **could result in minor or moderate injuries**.

This symbol indicates a **potentially damaging situation**. If it is not avoided, it **could result in damage to the product** or surrounding equipment

This symbol indicates special hints for the user and other particularly useful information. It is **no** signal word for a hazardous or damaging situation.

- identifies listings

⇨ identifies cross-references to other pages, chapters, figures, and tables.

→ means „task to be performed".

❑ means „monitoring task".

✔ means „task completed".

➠ means „result of a completed task".

1.3 Abbreviations

Chap.	Chapter
Fig.	Figure
Tab.	Table

1.4 Dimensions

Unless specified otherwise, all dimensions are in mm.

2 Safety Instructions

2.1 General safety instructions

For operation of the machine, the local safety and accident prevention rules and regulations are in any case binding.

State of the art

This VOITH SULZER stock preparation machine has been built in accordance with state-of-the-art standards and the recognized safety rules. Nevertheless, its use may constitute a risk to life and limb of the user or of third parties, or cause damage to the machine and to other material property, if:

- the machine is not used as designated,
- the machine is operated by untrained personnel,
- the machine is modified or converted improperly and/or
- the safety instructions are not observed.

Therefore, every person involved in erecting, operating, inspecting, maintaining, servicing and repairing the machine must read, understand and observe the complete operating instructions, particularly the Safety Instructions.

Preconditions for using the machine:

The machine may only be used:

- in perfect technical condition,
- as designated,
- according to the instructions set out in the operating manual, and only by safety-conscious persons who are fully aware of the risks involved in operating the machine,
- if all safety devices and emergency shut-off components are fitted and operative.

Any functional disorders, especially those affecting the safety of the machine, must therefore be rectified immediately.

Safety instructions and warnings

Observe all safety instructions and warnings attached to the machine. Make sure that these signs are legible and replace damaged and illegible plates.

Modifications or changes in operating conditions

In the event of safety-relevant machine modifications or changes in operating conditions, stop the machine immediately and report the malfunction to the person responsible for the machine.

Rebuilds or modifications

Never make any unauthorized rebuilds and modifications which might impair safety. Any verbal agreements with the manufacturer or the design engineer require written confirmation.

Replacing damaged parts

Parts of the machine that are not in perfect working order must be replaced immediately with original spare parts (⇨ Chap. 9, Spare Parts).

Use only original spare and wearing parts from VOITH SULZER Stoffaufbereitung GmbH! Unauthorized parts provide no guarantee that they have been designed and manufactured according to the application. **Danger of accidents!**

Checks and maintenance

Adhere to prescribed intervals or intervals specified in the operating instructions for routine checks and maintenance work.

Working with hazardous substances

Make sure that dangers to the environment caused by hazardous substances are precluded when working on lubricating systems and devices and when cleaning the machine with solvent-containing detergents.

Lifting gears

Make sure that the lifting capacity of the lifting gears to be properly installed is at least equal to the weight of the machine or of the parts to be lifted. (⇨ Chap. 3.2, Weights).

2.6 Additional hazards

Crushing and cut/sever hazards due to:

- moving machine parts left exposed by removing covers for inspection, sampling, etc.,
- running and exposed shafts, couplings and screws

Burning or scalding hazards due to:

There is a risk of burning or scalding when opening or keeping open function-checks or sampling ports on equipment operating at high temperatures (above 40°C).

Harmful gases and vapours

Open covers may allow harmful gases or vapours into the atmosphere.

Pay special attention to:

- cleanout and inspection ports and
- sampling ports at single-shaft disintegrator.

3 Technical Data

3.1 Machine data

Serial No.:	878
Year of construction	1995

3.2 Weights

Single-shaft disintegrator	kg	20000
Gear unit	kg	ca. 4000
Motor	kg	ca. 8000
Single-shaft disintegrator with motor and gear unit	kg	ca. 32000

Rotor strip	kg	38
Distributor screw, split	kg	1500
Sealing flange	kg	42
Hollow shaft	kg	3470
Shaft with kneading tackle and distributor screw	kg	7000
Feeding chamber-half	kg	890
Kneading chamber-half	kg	950
Stator strip	kg	45
Discharge chamber	kg	840
Bearing housing - upper part	kg	260
Bearing cover	kg	45
Splash ring	kg	50
Shaft protection sleeve	kg	32
Discharge screw, complete	kg	1250
Safeset coupling	kg	160
Coupling combination	kg	950

4 Technical Description

4.1 Use

The single-shaft disintegrator EWZ D500 is designed for the continuous disintegration of pulped waste paper. Disturbing substances are dispersed beyond the level of visibility.

4.2 Principle of Operation

The dispersing effect is based on the principle of an intensive fibre-to-fibre friction. The required relative motion of the individual fibres is due to the displacement effect of the kneading tackles at high stock consistency and high stock compaction in the kneading chamber.

Description of the principle of operation:

- a screw system with plug screw feeds the single-shaft disintegrator with the stock to be disintegrated in the form of a plug.
- In the feeding chamber of the single-shaft disintegrator, this plug is split by a distributor screw and conveyed to the symmetrically arranged kneading chambers.
- Kneading tackles on rotor and stator side disintegrate the stock.
- Meanwhile, the stock is conveyed to the discharge chambers. The discharge chambers have downward outlets to which the speed-controlled discharge screws are flanged.
- The speed of the synchronously running discharge screws determines the degree of compaction and thus the power requirements of the single-shaft disintegrator.
- Built-in pressure transmitters measure the degree of compaction in the two kneading chambers.

The disintegrator shaft with screwed-on distributor screw and kneading tackles is supported in grease-lubricated rolling bearings on both sides. These bearings are accommodated in split bearing housings and connected to the discharge chamber and the foundation.

Discharge chamber and rotating shaft are sealed with a water-cooled stuffing box.

5 Installation

5.1 Transporting the single-shaft disintegrator

The single-shaft disintegrator is supplied in a shipping case.

Observe the weight indicated on the shipping case and use suitable lifting gears.

Only suspend shipping case at the intended and marked positions.

→ Check the shipping case for transport damage.

→ Open the shipping case.

Always use safe equipment when climbing onto the case.

→ Loosen machine fixing in the shipping case.

→ Check consignment against delivery note for completeness.

→ Check consignment for transport damage.

5.3 Foundations

General

The foundation is to be layed by the customer.

Make sure that a suitable lifting gear is freely accessible from the place where the single-shaft disintegrator is installed to permit installation, repair and dismantling work.

Preconditions for laying the foundation

✔ Location known and accessible

✔ Load capacity of the substructure is sufficient for any occurring static and dynamic loads.

✔ The reinforcement plan is available.

Laying the foundation

The foundation for the single-shaft disintegrator is to be layed by the customer according to the VOITH SULZER foundation plan.

WARNING

Observe technical data when laying the foundations (⇨ Chap. 3, Technical Data).

5.4 Setting up and aligning

Single-shaft disintegrator

→ Align soleplates of single-shaft disintegrator horizontally using the levelling bolts.

→ Grout soleplates in.
The top edge of the concrete must be approx. 10mm below the upper soleplate edge. Retighten foundation bolts after the concrete has set.

→ Set single-shaft disintegrator up and align it.

→ Screw and pin single-shaft disintegrator to foundation.

WARNING

The support under the feeding chamber is exclusively for repair purposes. It may never be screwed to the soleplates during operation.

Otherwise, thermal expansions may lead to distortions in the single-shaft disintegrator.

Motor

- Always use three-phase induction motors with squirrel-cage or slip-ring rotors.
- Select the type of enclosure according to the local conditions in combination with the applicable safety regulations.
- Select the starting method considering the local power mains.

The mass moment of inertia of the entire rotor unit is a decisive factor when checking the starting conditions.

Rotor unit with disintegrator strips and distributor screw	kgm^2	465
Coupling combination	kgm^2	50
Spur gear unit	kgm^2	3.55
Safety coupling	kgm^2	1.5
J reduced to motor shaft at 1500 min^{-1}	kgm^2	24.55
J reduced to motor shaft at 1800 min^{-1}	kgm^2	20.5

Torque

Restarting the single-shaft disintegrator requires a motor producing a breakaway torque which is twice as high as the rated motor torque.

Safeset safety coupling

The Safeset safety (⇨ Chap. 12, Subcontractors' Documentation) serves as mechanical protection of the single-shaft disintegrator and the drive train.

The safety coupling is a bushing which is radially expanded by oil pressure thus connecting shaft and hub by friction. It abruptly interrupts the power transmission in the event of overload.

Motor, Safeset safety coupling and gear unit are connected to each other via gear couplings.

NOTICE

Set the trip torque according to the calibration diagram supplied along with this operating manual.

The trip torque is to be approx. 20% higher than the breakdown torque of the motor.

5.6 Checking the direction of rotation

Direction of rotation of distributor screw

Check the direction of rotation of distributor screw with the aid of the following drawing.

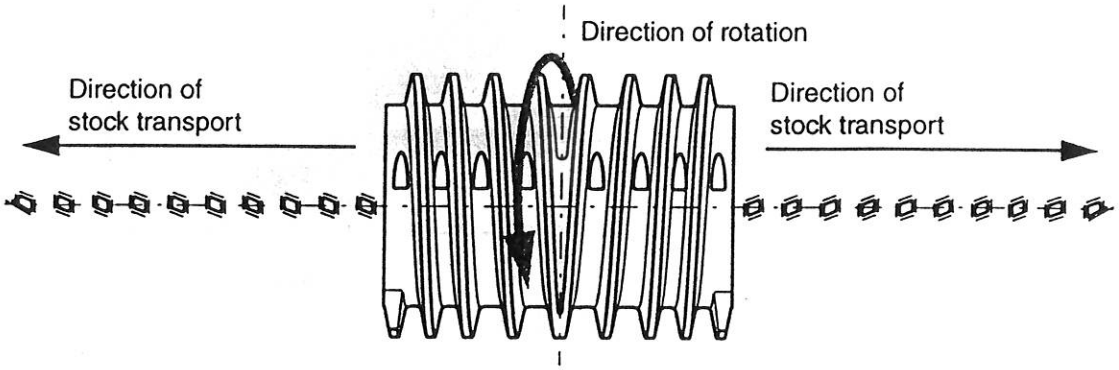

Fig. 5-2 Direction of rotation of distributor screw

Direction of rotation of discharge screw

Check the direction of rotation of discharge screws with the aid of the following drawing.

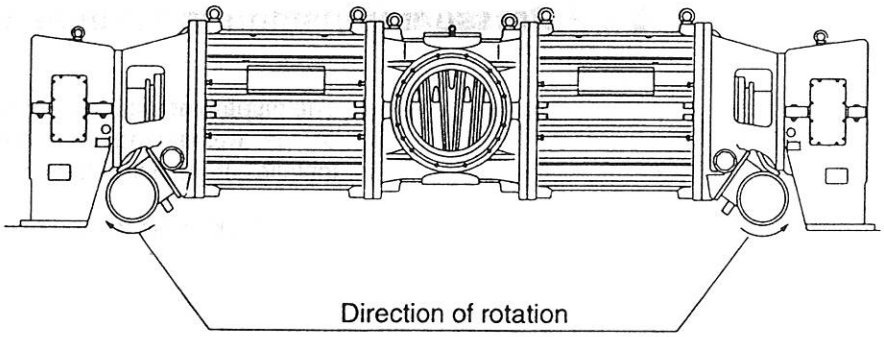

Fig. 5-3 Direction of rotation of discharge screws

5.7 Speed monitoring

To monitor a possible drive standstill, inductive proximity switches are installed:

- on the single-shaft disintegrator
- on the plug screw
- on the discharge screws

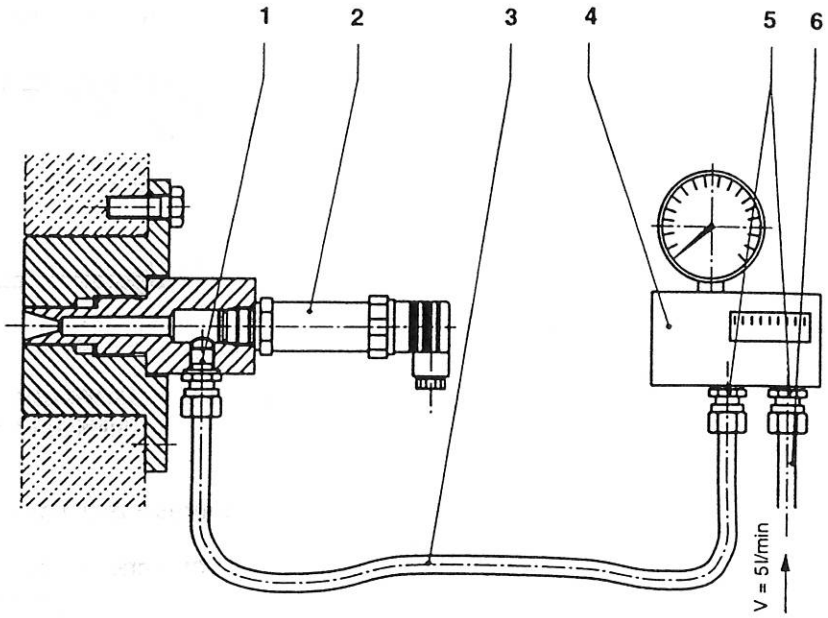

1 Thread 1/4"
2 Transmitter
3 Hose
4 Flowmeter
5 1/4" NPT
6 Pipe dia. 10

Fig. 5-6 Pressure transmitter

5.9 Water connections

Water connection of high-pressure flushing unit

Prior to each shutdown of the single-shaft disintegrator, the kneading chambers must be flushed to avoid high starting torques. This is to be performed with a high-pressure flushing unit to be installed by the customer.

The single-shaft disintegrator has 7 connections:

- 1 connection each on the discharge chambers
- 2 connections each on the kneading chambers
- 1 connection on the inlet of the feeding chamber

Water connection:

- Water grade: fresh water
- Pressure: >4bar
- Quantity: ca. 8l/min (per stuffing box)
- Valve type: Safeunit flowmeter

The sealing-water flow can be controlled and adjusted at the Safeunit flowmeter (⇨ Chap. 12, Subcontractors' Documentation, Installation and Operating Instructions „Safeunit flowmeter").

Alarm message

The Safeunit flowmeter is equipped with an alarm contact which is tripped if the sealing-water flow falls below a previously adjusted limit value. This alarm signal is output to the DCS via a relay with time delay (recommended time: 5min). The alarm indicates that the stuffing box needs to be checked.

Tighten the bolts at the stuffing-box gland only to such an extent that sealing water drops can still come out.

Adjust the recommended values at the Safeunit flowmeter.

NOTICE Readjust the set values during operation to prevent the stuffing box from overheating.

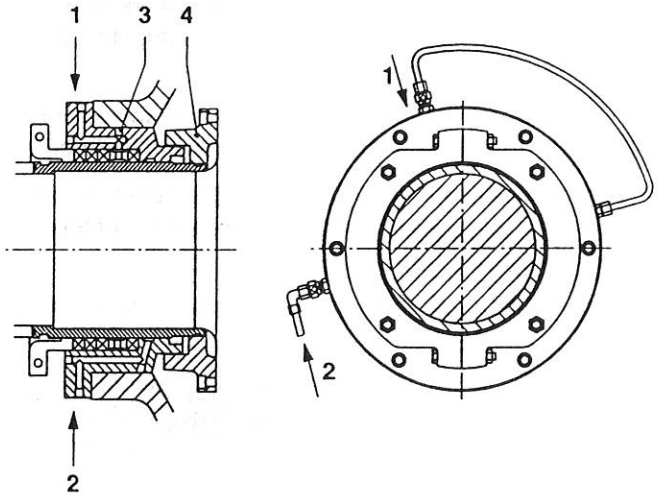

1 Flushing water Δp=1bar
2 Sealing water Δp=1bar
3 Stuffing-box housing
4 Flange

Fig. 5-9 Connections for sealing and flushing water

Stock discharge

- In the two kneading chambers of the single-shaft disintegrator, the stock is conveyed in axial direction to the outlets running at an angle downward.
- The discharge screws flanged to the outlets are equipped with a variable-speed drive. Both discharge screws run with asynchronous speed.
- The stock is discharged from the discharge screws into a chest located below it or to a conveyor system.

There is the danger of steam blows at stock inlet and outlet.

Therefore, install guards at stock inlet and outlet.

5.12 Preparing for initial start-up

Components	Target	Checked
Clear conveyor system from contaminants (especially contaminants due to construction and installation work).	Conveyor system free of contaminants	
Check bearing lubrication of single-shaft disintegrator, plug screw and discharge screw.	As specified in Chap. 8.2, Lubrication	
Check oil level of drive gear unit, plug screw gear unit and gearmotor of discharge screws.	Oil levels correct	
Water connections	Connections correct and tight	
Steam connection, if any	Connections correct and tight	
Check direction of rotation of single-shaft disintegrator, plug screw and discharge screws.	As specified in operating instructions	
Speed detector of discharge screws adjusted	Adjustment correct	

Tab. 5-1 Check list for initial start-up

6 Operation

6.1 Safety instructions for operation

Safety devices

Rotating parts, such as V-belts, couplings, shafts, rotors, etc. may seize loose clothes, long hair, jewellery or limbs.

You might get seriously injured or killed.

The machine must never be used without the required safety devices.

Protection of persons

Unplanned incidents may result in personal injury.

To ensure rapid reaction, always check where the emergency stop switch is installed and whether it works properly before putting the machine into operation.

Secure all open tanks and conveyor systems with accident-safe guards or rails.

Only for initial start-up and restart after maintenance and repair work:

→ Adjust stuffing-box gland.

NOTICE

Tighten the nuts at the stuffing-box gland only to such an extent that there is still a light tendency to form drops.

Otherwise, the stuffing box may run dry.

6.4 Adjusting the power input

Control modes for single-shaft disintegrator:

- power control (⇨ control manual)
- control of specific power consumption

The power input of the single-shaft disintegrator is solely influenced by the stock compaction factor in the kneading chamber. The degree of stock compaction can be determined on the basis of the speed of the synchronously running discharge screws.

The power can only be kept constant, if these parameters are observed:

- throughput
- stock consistency
- stock characteristics

6.5 Checks during operation

- ❑ Check the power input.
- ❑ Check the vibration monitoring unit.
- ❑ Check the rolling-bearing temperature monitoring unit.
- ❑ Check the shaft sealing.
- ❑ Check the stock temperature.
- ❑ Check the stock pressure.
- ❑ Check the gear-unit temperature.

Rolling-bearing monitoring unit

Bearing temperature

The temperature of the rolling bearings is measured with resistance thermometers located at the outer bearing ring.

- Temperature indication: in the DCS
  This feature permits to perform a necessary bearing replacement during a planned disintegrator shutdown.
- Adm. bearing temperature: ≤75 °C
  This bearing temperature is valid for the use of a lithium base grease. If this value is exceeded, an alarm is triggered.
- Max. bearing temperature: 90 °C

NOTICE

Temperatures higher than 90 °C can damage the bearing. Therefore, switch the single-shaft disintegrator off if this temperature is exceeded.

Shock pulse measurement

The bearing housings have tapped holes into which a shock pulse transducer can be screwed.

Shaft sealing

❑ The stuffing box must release drip water.

→ If no drip water comes out, loosen stuffing-box gland.

In the case of excessive water and stock release, retighten stuffing-box gland or replace stuffing-box packing, if necessary.

→ When replacing the packing, check shaft protection sleeve for wear and scoring.

→ Replace worn and damaged stuffing-boxes.

Stock temperature measurement

The stock temperature is measured with a resistance thermometer as follows:

- on inlet side in the trough of the plug screw
- on outlet side in the transfer flange of the discharge screw

→ Switch discharge screws off.

→ Switch off conveyor system, if any.

6.8 Prolonged shutdown of single-shaft disintegrator

Preconditions

✔ The single-shaft disintegrator has been shut down.

Prolonged shutdown

→ Secure plant against unintentional restart.

→ Put main switch, if installed, in OFF position and lock it.

7 Troubleshooting

Fault	Possible cause	Fault clearance	Remarks
Restart failure after disintegrator shut-down	– Kneading compartments have not been flushed prior to shut-down, stock or dried stock residues cause high breakaway torque	Clean kneading compartments several times with high-pressure flushing device; if necessary, open and clear kneading compartment	
Excessive bearing temperature	– Insufficient rolling-bearing lubrication	Relubricate bearings and monitor	
	– Strong noise generation in bearing	Check bearing and replace it, if necessary	
Vibration monitoring unit switches single-shaft disintegrator off	– Check foundation fastening	Provide secure foundations and/or retighten fastening bolts	
	– Unbalance	Open single-shaft disintegrator and check fastening of kneading tackles	
	– Ambient influences from building or machines in vicinity	Perform vibration analysis; increase shutdown threshold value after consultation	
Insufficient dispersing effect	– Insufficient dispersing power introduced in stock	Increase power input/ specific power consumption	
	– Heavily worn stator and rotor elements	Replace stator and rotor elements	
Safeset safety coupling interrupts drive train	– Blocking due to ingoing foreign matter	Open kneading compartments and check carefully; replace damaged stator and rotor elements	

Tab. 7-1 Troubleshooting

8 Maintenance

8.1 Safety instructions for maintenance work

Safety devices

Ensure that all required safety devices have been fitted again after completion of all maintenance and repair work.

Protection of persons

Ensure that the plant and all upstream and downstream equipment are switched off and secured against unintentional restart prior to any maintenance work.

Make sure that the machine and all stock pipes to the machine have been emptied and depressurised.

Use platforms or ladders. Do not climb on piping.

Safe operation

To ensure safe operation after completion of maintenance and repair work, use only new and undamaged fasteners (screws, bolts, washers, locking elements, nuts, etc.) and new seals for reassembly.

Properties of lubricants	– Lithium-base multi-purpose grease or rolling-bearing grease – water-resisting – corrosion-inhibiting – temperature range up to 130 °C
Designation	Lubricating grease KP2K DIN 51825/1

Tab. 8-1 Lubricants (mobile AW2)

No	Lubrication interval	Lubrication type	Component	Lubrication point	Lubricant	Lubricant quantity
1	Initial lubrication	Forced-feed lubrication	Locating bearing	Lube nipple	Grease	150g
1	Relubrication	Forced-feed lubrication	Locating bearing	Lube nipple	Grease	150g
1	Every 3 months	Forced-feed lubrication	Locating bearing	Lube nipple	Grease	300g
2	Initial lubrication	Forced-feed lubrication	Non-locating bearing	Lube nipple	Grease	150g
2	Initial lubrication	Forced-feed lubrication	Non-locating bearing	Lube nipple	Grease	150g
2	Every 3 months	Forced-feed lubrication	Non-locating bearing	Lube nipple	Grease	300g

Tab. 8-2 Lubrication intervals and grease quantities

8.3 Repacking the stuffing-box

Repacking

→ First loosen split stuffing-box gland and dismantle completely

→ Remove old packings

→ Clean contact surfaces

→ Check shaft protection sleeve for wear and scoring

→ Insert first packing ring and sealing-water ring.

→ Remove outside bearing cover.

→ Loosen screws on inside bearing cover.

→ Loosen screws connecting discharge chamber and bearing housing upper part. The discharge chamber is still connected to the lower part of the bearing cover.

→ Separate bearing housing upper part from bearing housing lower part and lift it off.

→ Prop up disintegrator shaft below splash ring and lift by 0.5mm.

→ Remove withdrawal sleeve of bearing with hydraulic nut.

Bearing fitting

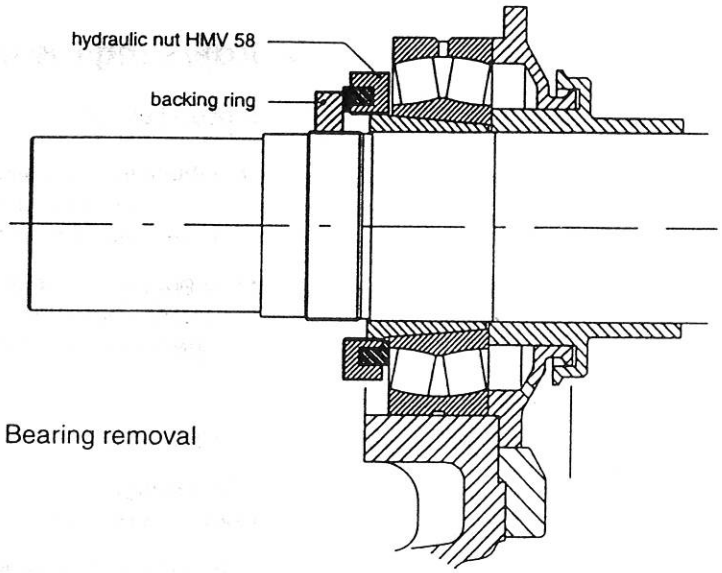

Bearing removal

Fig. 8-2 Bearing removal and fitting

→ Pull bearing off.

Fitting the bearing

NOTICE

Observe the generally applicable directives for bearing installation.

Remove burrs and scratches at the bearing seats.

Grease the bearing seats before mounting the bearings.

Seal the flange connection between discharge screw and discharge chamber with PTFE flat sealing strip.

8.5 Replacing the shaft protection sleeve

Removing the shaft protection sleeve

Proceed as follows:

→ Dismantle discharge screw.

→ Remove coupling guard (when replacing drive-side bearing).

→ Dismantle intermediate shaft of coupling (when replacing drive-side bearing).

→ Remove disintegrator-side coupling half (when replacing drive-side bearing).

→ Prop up disintegrator casing.

→ Fasten prop with T-head bolt to soleplate.

→ Remove outside bearing cover.

→ Loosen screws on inside bearing cover.

→ Loosen screws connecting discharge chamber with split bearing housing.

→ Separate bearing housing upper part from bearing housing lower part and lift it off.

→ Prop up disintegrator shaft below splash ring and lift by 0.5mm.

→ Remove withdrawal sleeve of bearing with hydraulic nut (⇨ Fig. 8-2, Bearing removal and fitting).

→ Pull bearing off.

→ Remove bearing housing lower part.

→ Dismantle bearing cover, splash ring, stuffing-box gland, sealing-water ring and shaft protection sleeve.
Shift shaft prop to the outside when dismantling the splash ring and to the inside when dismantling the shaft protection sleeve.

→ Check whether there is a key in the shaft.

Close contact with hot surfaces may cause burns.

Wear safety gloves when handling the hot shaft protection sleeve.

→ Mount shaft protection sleeve.

Continue sleeve installation by following the steps described for sleeve removal in the reverse order.

Observe the admissible tightening torques (⇨ Fig. 10-3, Tightening torques) and the instructions for bearing installation (⇨ Chap. 8.4, Replacing the bearings).

8.6 Replacing the disintegrator tackle

Removing the disintegrator tackle

When removing the toothed strips, the rotor may rotate. Therefore, secure rotor with safety device shown in the following drawing.

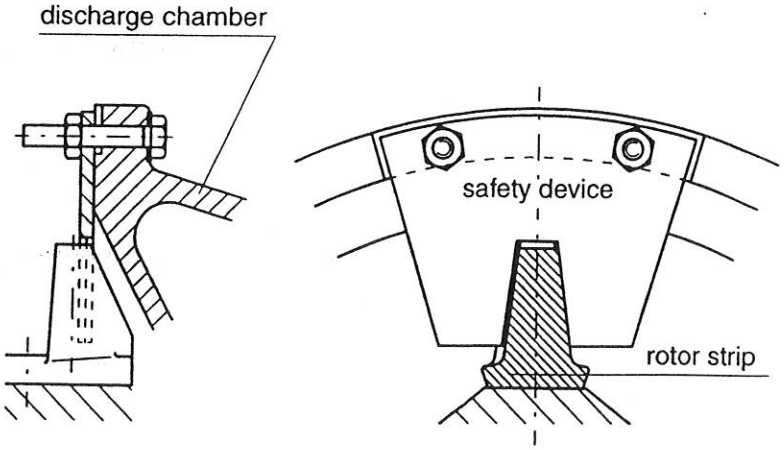

Fig. 8-4 Safety device

Rotor strips

The direction of the rotor strips is either LH or RH.

NOTICE Make sure that the rotor strips are not confused on installation.

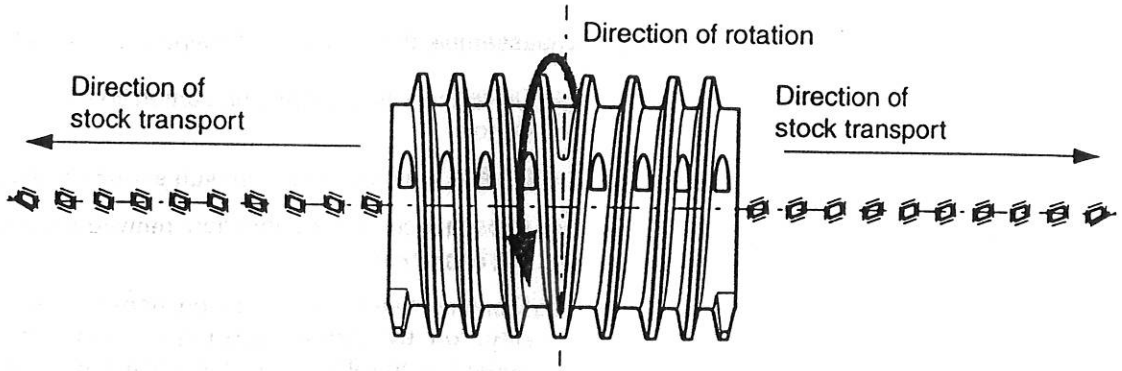

Fig. 8-6 Direction of rotation of distributor screw

Socket head cap screw DIN 912, A4-70		M16 x 45
Washer DIN 125, A4		A17
Fasteners for rotor strips (socket head cap screws and washers)	pcs.	192 each
Fasteners for stator strips (socket head cap screws and washers)	pcs.	224 each
Tightening torque (pasted with PTFE)	Nm	150

÷ 1,356

Assembly of the single-shaft disintegrator

Reverse sequence for disintegrator assembly. 110 Ft.Lbs

NOTICE Observe admissible tightening torques (⇨ Fig. 10-3, Tightening torques).

→ Remove T-head bolts.

NOTICE

When fitting the screw halves, ensure that the distributor screw is installed in the position shown in the following drawing.

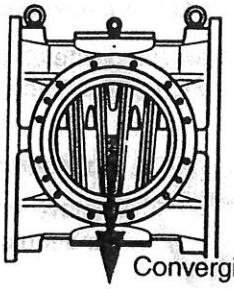

Fig. 8-7 Position of distributor screw

→ Mount top screw half on key.

→ Lift bottom screw half with a crane.

→ Screw bottom screw half to top screw half.

Hex. screw DIN 931, A4-70	15 pcs	M16x80
Washer DIN 125, A4	15 pcs	A17
Tightening torque (pasted with PTFE)	Nm	120

For all further installation work, reverse steps of removal work.

NOTICE

Observe admissible tightening torques (⇨ Fig. 10-3, Tightening torques).

8.8 Disassembly of single-shaft disintegrator

Disassembly

→ Disconnect flushing-water connection.

→ Remove discharge screw.

→ Disconnect and pull plug screw from disintegrator.

→ Remove coupling hub.

9 Spare Parts

To order spare parts use the printed form (⇨ Chap. 11, Appendix).

The following part numbers refer to the drawings in chapter 10, Main Parts List.

9.1 Wearing parts

Part No.	Quantity	Designation
5	2 set	Scraper bar
7	1 set	Stator strip B
8	1 set	Rotor strip B-RH
8	1 set	Rotor strip B-LH
9	1 set	Stator strip A
10	1 set	Rotor strip A-RH
10	1 set	Rotor strip A-LH
11	1 set	Scraper bar
12	1	Distributor screw

Since longer terms of delivery cannot be excluded, we recommend to store spare parts in time.

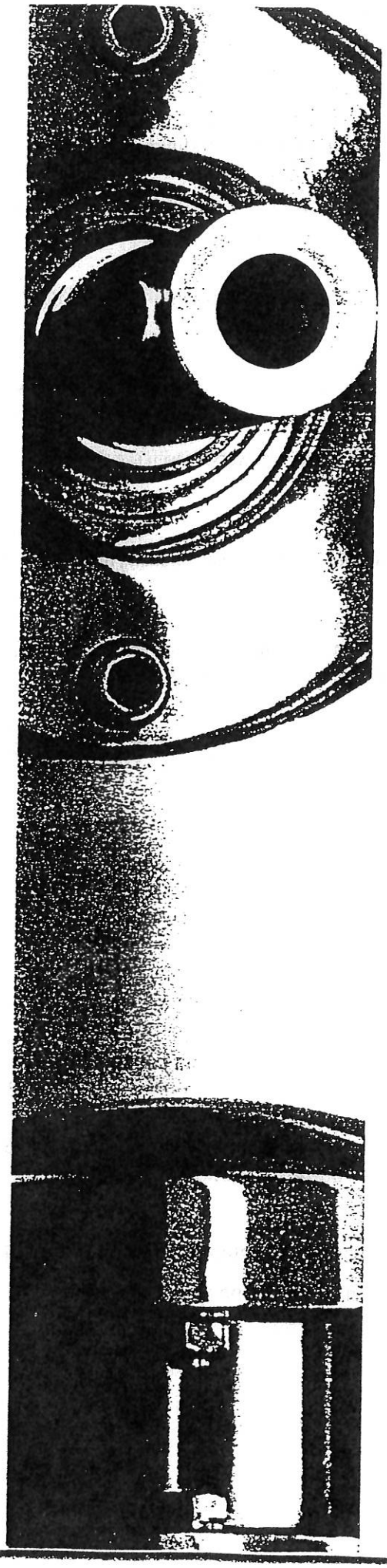

Gear Units

Gear Unit Types R, F, K, S
Installation, Commissioning and Maintenance Instructions

Edition 1/95

09222316/495

TÜV CERT
DIN ISO 9001
Zertifikat: QA - 404

SEW EURODRIVE

Contents

1. Installation

1.1 Before you start

The drive may only be installed if

- **the details on the nameplate of the drive correspond with the power mains;**
- **the drive is not damaged (no damage has occurred during transportation or storage);**
- **the following conditions are met:**
  for standard gear units: **ambient temperature between –10 °C and +40 °C, no oils, acids, gases, vapours, radiation, etc.**
  for special design units: **drive design to suit specific ambient conditions**

1.2 Preparatory work

All anti-corrosion agents shall be carefully removed from output shafts and flange surfaces using standard solvent. Make sure to protect sealing lips of oil seals against contact with solvent (solvent will cause damage to the material) !

Gear units for "long-term storage"

- if filled with mineral oil these gear units come provided with a ready-for-service oil filling to suit their respective mounting position. Check the oil level in any case before commissioning (→ section 3.3.1).
- if filled with synthetic oil these gear units come with a slightly increased oil level. Correct the oil level before commissioning (section → 3.3.1).

1.3 Installing the gear unit

The gear unit or geared motor may only be installed/mounted on a level [1], vibration-damping, torsionally rigid support structure in the specified mounting position. Do not twist housing feet and mounting flanges against each other !

All oil level plugs, oil drain plugs and breather plugs must be freely accessible !

If necessary, use intermediate plastic shims (thickness 2-3 mm) to eliminate risk of electrochemical corrosion between gear unit and driven machine (bonding of two different metals such as cast iron/stainless steel) ! Also use plastic washers for screws.

1.3.1 Replacing the screw plug

Before the unit is started, the screw plug is to be removed and replaced by the supplied breather plug or vent valve! The screw plug is identified by a plastic cap and might be painted over (location → appendix mounting positions).
On this occasion also check whether the oil filling is in accordance with the specified mounting position (→ section 3.3.1).

1.3.2 Installation in damp locations or in the open air

For use in damp locations or in the open air gear unit versions are supplied with corrosion protection. Possible damage to the paint work (e.g. at breather plugs/vent valve) is to be touched up.

[1]) Maximum permissible deviation from plane for flange mounting (reference values as per DIN ISO 1101): for flange diameters 120 ... 160 mm max. deviation 0.2 ... 0.5 mm

2.3.2 "Smooth hollow shaft with shrink disc" version

STOP

Do not tighten clamping bolts without the shaft being installed otherwise the hub may deform !

Note:

To avoid fretting rust, machine the solid shaft of the driven machine between two facing surfaces! (→ "Geared Motors" catalogue, design references for assembly/disassembly of shaft-mounted helical gear units)

Screws	Tightening torques Ma [Nm]
M5	5
M6	12
M8	29
M10	58
M12	100
M16	240
M20	470
M24	820
M27	1100
M30	1640

2.3.2.1 Mounting the shrink disc (Fig.4)

1. Remove spacers between outer rings (if installed).
2. Hollow shaft bore and input shaft of driven machine
   - Carefully degrease mating surfaces.
3. Mount shaft or slide shaft-mounted gear onto shaft
4. Tighten clamping bolts (repeatedly)
   - subsequently (not in a diagonally opposite sequence !)
   - with equal tightening torque (see table)
   - make sure outer rings are plane parallel, do not fit askew
   - recommended tightening angle: 30 – 60 ° turn of the bolt
5. Check tightening torque. Observe deviations for special versions.

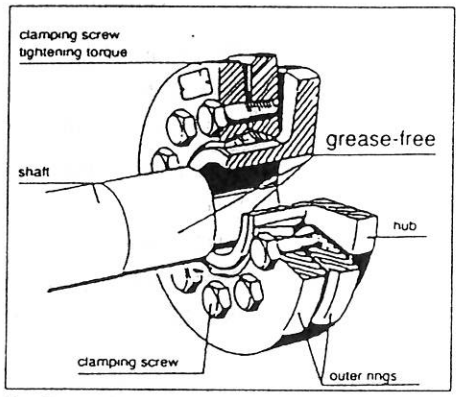

fig. 4

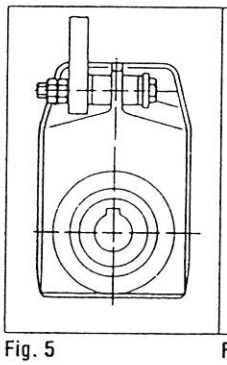

Fig. 5

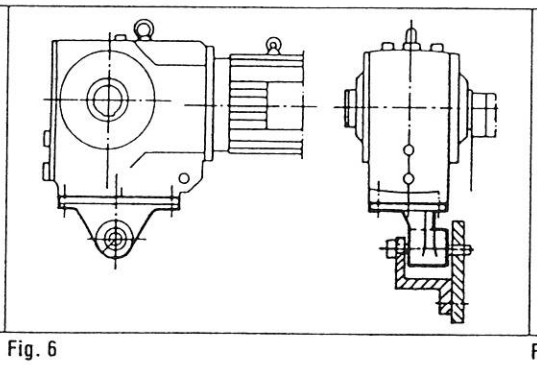

Fig. 6

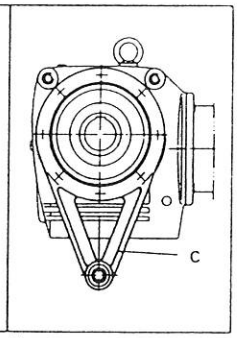

Fig. 7

2.3.3 Mounting torque arms

Make sure not to twist torque arms when mounting them !

1. Mount torque arms:
   - shaft mounted helical gear units as shown in Fig. 5
   - helical-bevel gear units as shown in Fig. 6 (support the bushing on both sides as shown)
   - helical worm gear units as shown in Fig.7.

3.2 Before you start

Tools/resources required

- set of spanners

3.3 Installation / maintenance work

Be careful not to mix different synthetic lubricants and do not mix synthetic and mineral lubricants either! The standard lubricant used is oil (→ appendix).

3.3.1 Oil check

1. Sample some oil from the oil drain plug.
2. Check the oil sample (colour, consistency)
   – if oil sample is polluted, change oil (→ 3.3.2)
3. Gear units with oil level plug:
   – Remove oil level plug,
   – check oil level and correct if necessary,
   – replace oil level plug.

3.3.2 Oil change

Make sure the gear unit is at its operating temperature when changing the oil, as the oil's reduced viscosity when cold will make draining more difficult.

STOP

The outer gear unit surface may be no more than lukewarm (hot oil can cause severe burns)!

1. Place appropriate vessel underneath the oil drain plug.
2. Remove oil level plug, breather plug/vent valve and oil drain plug.
3. Drain oil completely.
4. Screw in oil drain plug.
5. Fill in new oil through breather hole.
   – oil filling in accordance with mounting position (→ appendix)
   – if necessary check oil level at level plug.
6. Screw in oil level plug.
7. Screw in breather plug/vent valve.

01 805 32

Anwendung	bei Umgebungstemperatur (-50 … 0°C … +50 … +100)	Schmierstoffart DIN (ISO)		ISO - Viskosiäts- bzw. NLGI-Klasse	ARAL	BP	Esso	Mobil	SHELL	DEA	KLÜBER LUBRICATION	Tribol	wintershall
Stirnrad-, Kegelrad-, Flachgetriebe (Helical Gear Units)	-25 … +80	Öl (Oil)	CLP PG	VG 220	Aral Degol GS 220	BP Enersyn SG-XP 220		Mobil Glygoyle 30	Shell Tivela Öl WB		Klübersynth GH 6-220	Tribol 800/220	
	0 … +40	Öl (Oil)	CLP (CC)	VG 220	Aral Degol BG 220	BP Energol GR-XP 220	SPARTAN EP 220	Mobilgear 630	Shell Omala Öl 220	Falcon CLP 220	Klüberoil GEM 1-220	Tribol 1100/220	Wintershall Ersolan 220
	-15 … +25	Öl (Oil)	CLP (CC)	VG 150 VG 100	Aral Degol BG 100	BP Energol GR-XP 100	SPARTAN EP 150	Mobilgear 629	Shell Omala Öl 100	Falcon CLP 150	Klüberoil GEM 1-150	Tribol 1100/100	Wintershall Ersolan 100+150
	-30 … +10	Öl (Oil)	CLP (CC) / HLP (HM)	VG 68-46 VG 32	Aral Degol BG 46	BP Energol GR-XP 68	ESSO ATF D-21611	Mobil D.T.E. 15M	Shell Tellus Öl T 32		Klüberoil GEM 1-68	Tribol 1100/68	Wintershall Ersolan 68
	-45 … -20	Öl (Oil)	HLP (HM)	VG 22 VG 15		BP Energol HLP-HM 10	UNIVIS J 13	Mobil D.T.E. 11M	Shell Tellus Öl T 15	Aircraft Hydraulic Oil 15	ISOFLEX MT 30 ROT		Wintershall Wiolan HV 15
Schneckengetriebe	0 … +60	Öl (Oil)	CLP PG[1]	VG 680				Mobil Glygoyle HE 680			Klübersynth GH 6-680	Tribol 800/680	
	0 … +40	Öl (Oil)	CLP (CC)	VG 680	Aral Degol BG 680	BP Energol GR-XP 680	SPARTAN EP 680	Mobilgear 636	Shell Omala Öl 680	Falcon CLP 680	Klüberoil GEM 1-680	Tribol 1100/680	Wintershall Ersolan 680
	-15 … +25	Öl (Oil)	CLP (CC)	VG 220	Aral Degol BG 220	BP Energol GR-XP 220	SPARTAN EP 220	Mobilgear 630	Shell Omala Öl 220	Falcon CLP 220	Klüberoil GEM 1-220	Tribol 1100/220	Wintershall Ersolan 220
	-20 … +10	Öl (Oil)	CLP (CC)	VG 150 VG 100	Aral Degol BG 100	BP Energol GR-XP 100	SPARTAN EP 150	Mobil D.T.E. 18M	Shell Omala Öl 100		Klüberoil GEM 1-150	Tribol 1100/100	Wintershall Ersolan 100+150
	-25 … +10	Öl (Oil)	CLP PG[1]	VG 220				Mobil Glygoyle 30			Klübersynth GH 6-220	Tribol 800/220	
	-45 … -20	Öl (Oil)	HLP (HM)	VG 22 VG 15		BP Energol HLP-HM 10	UNIVIS J 13	Mobil D.T.E. 11M	Shell Tellus Öl T 15	Aircraft Hydraulic Oil 15	ISOFLEX MT 30 ROT		Wintershall Wiolan HV 15
Sonderschmierung Getriebe	-40 … +80	Öl (Oil)	CLP-HC	VG 220				Mobil SHC 630			Klübersynth GEM 4-220	Tribol 1550/220	
	-40 … +10	Öl (Oil)	CLP-HC	VG 32				Mobil SHC 624			Klübersynth GEM 4-32	Tribol 1550/32	
Wälzlager Getriebe	-25 … +60	Fett (Grease)	DIN 51818	00 [2]	Aralub SKA 00		Fließfett S420	Glygoyle Grease 00	Shell Tivela Compound A		Klübersynth GE 46-1200		
	-15 … +40	Fett (Grease)	DIN 51818	000 - 0 [2]	Aralub MFL 00	BP Energrease LS - EP 00	FIBRAX EP 370	Mobilux EP 023	Shell Spezial-Getriebefett H	Orona FG EP 0	Klüberplex GE 11-680		Wintershall Wiolub GFW
	-30 … +60	Fett (Grease)	DIN 51818	2 - 3	Aralub HL 3	BP Energrease LS 3	Exxon BEACON 2	Mobilux EP 2	Shell Alvania Fett R 3	Glissando 30	CENTOPLEX 2 EP	Tribol 4020/220-2	Wintershall Wiolub LKF 3
	-40 … +80	Fett (Grease)	DIN 51818	2			Unirex S2	Mobiltemp SHC 100					
Wälzlager Motor	+80 … +100	Fett (Grease)	DIN 51818	2							BARRIERTA L55/2		
	-25 … +80	Fett (Grease)	DIN 51818	3			Unirex N3						
	-25 … +60	Fett (Grease)	DIN 51818	3					Shell Alvania Fett R 3				
	-45 … -25	Fett (Grease)	DIN 51818	2					Aero Shell Grease 16				

◤ = werksseitig verwendete Schmierstoffe SEW USOCOME (F)
◤ = werksseitig verwendete Schmierstoffe SEW EURODRIVE (BRD)

▭ = synthetische Schmierstoffe
▭ = mineralische Schmierstoffe

[1] Schneckengetriebe mit erhöhten Abtriebsmomenten
[2] nur bei Getriebe R302, R32 – Rücksprache bei anderen Getriebetypen

CLP PG = Polyglykol
CLP HC = synth. Kohlenwasserstoff

CLP = Mineralöl

A 1

Stirnradgetriebe

R132/133 A, RF132/133 A

EINZELTEILLISTE

01 339 14

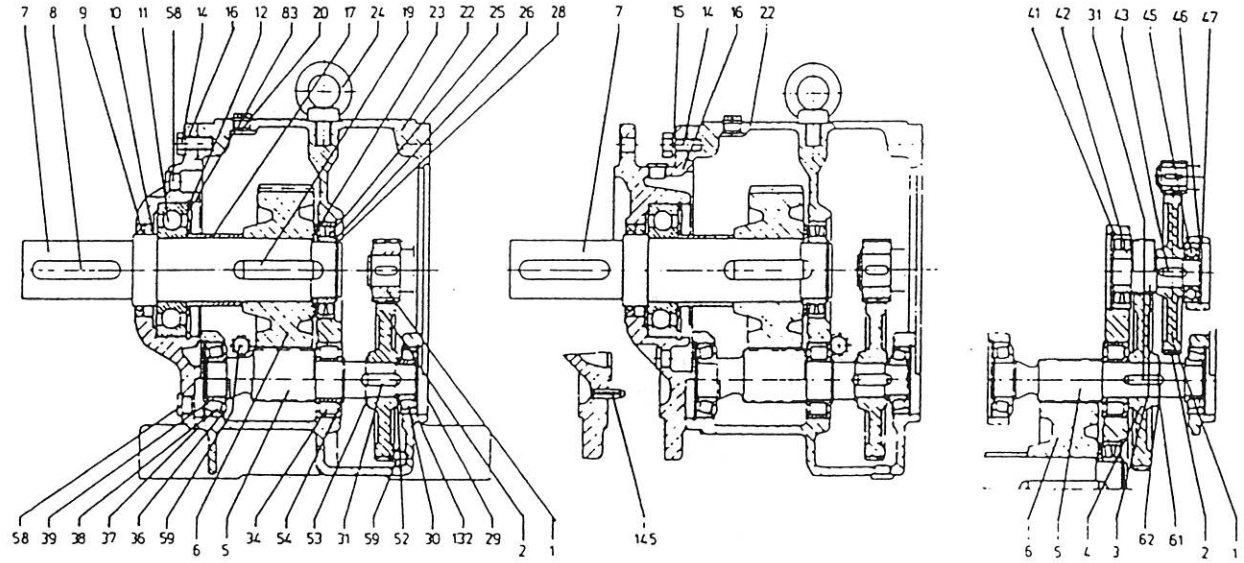

„Gültig ab Auslieferung 26. KW 1985"

2-stufige Ausführung

3-stufige Ausführung

Bei Ersatzteilbestellung bitte Leistungsschilddaten mit Fabrikationsnummer und Benennung mit Sachnummer angeben!
Die Ritzel und Zahnräder haben aufgeschlagene Sachnummern, welche stets anzugeben sind!
Schmierstoff und Schmierstoffmenge siehe entsprechende Tabelle!

Bei Getriebemotoren jeder Art sind antriebsseitig Motoren, Verstellgetriebe oder spez. Deckel angebaut. Ersatzteile hierfür siehe entsprechende Einzelteilliste.

X) nach Bedarf

Lfd. Nr.	Benennung	DIN-Bezeichnung	Sach-Nr.	Stck
26	Paßscheibe	75x90x0,3 DIN 988-St	012 055 3	X)
26	Paßscheibe	75x90x0,1 DIN 988-St.	012 054 5	X)
25	Pendelrollenlager	22215 DIN 635	010 590 2	1
24	Ringschraube	M24 DIN 580	010 233 4	1
23	Stützscheibe		116 211 X	1
22	Getriebegehäuse RF		116 471 6	1
22	Getriebegehäuse R		116 469 4	1
20	Entlüftungsschraube	M22x1,5	010 468 X	1
19	Paßfeder	B28x16x90 DIN 6885	013 481 3	1
17	Distanzrohr		116 135 0	1
16	Abtrs. Flansch Ø 550		116 132 6	1
16	Abtrs. Flansch Ø 450		116 130 X	1
16	Abtrs. Deckel		116 128 8	1
15	Federring	B16 DIN 127	010 995 9	8
14	Sechskantschraube			
	Flansch Ø 550	M16x40 DIN 933-8.8	010 127 3	8
14	Sechskantschraube RF			
	Flansch Ø 450	M16x45 DIN 933-8.8	011 024 8	8
12	Sicherungsring	200x4 DIN 472	011 458 8	1
11	Rillenkugellager	6319 DIN 625	011 060 4	1
10	Wellendichtring	A105x140x12 DIN 3760-NB	010 643 7	1
9	Wellendichtring	AS105x140x12 DIN 3760-NB	010 671 2	1
8	Paßfeder	A25x14x140 DIN 6885	010 048 X	1
7	Abtrs. Welle		116 133 4	1
6	Rad			1
5	Ritzelwelle			1
4	Rad			1
3	Ritzelwelle			1
2	Rad			1
1	Ritzel			1

Lfd. Nr.	Benennung	DIN-Bezeichnung	Sach-Nr.	Stck
145	Zylinderkerbstift RF	16x40 DIN 1473-45 S20K	011 366 2	2
132	Sicherungsring	90x3 DIN 472	010 326 8	1
83	Nilos-Ring	6319 JV	011 819 2	1
62	Paßscheibe (3-stufig)	50x62x0,3 DIN 988-St	010 400 0	X)
62	Paßscheibe (3-stufig)	50x62x0,1 DIN 988-St	010 376 4	X)
61	Sicherungsring (3-stufig)	50x2 DIN 471	010 289 X	1
59	Verschlußschraube	M22x1,5	011 431 6	3
58	Verschlußschraube	M22x1,5	011 431 6	2
54	Sicherungsring	50x2 DIN 471	010 289 X	1
53	Stützscheibe	45x55x3 DIN 988-St	010 353 5	1
52	Stützscheibe	40x50x2,5 DIN 988-St	010 352 7	1
47	Sicherungsring	100x3 DIN 472	010 327 6	1
46	Paßscheibe	80x100x0,3 DIN 988-St	010 405 1	X)
46	Paßscheibe	80x100x0,1 DIN 988-St	010 381 0	X)
45	Rillenkugellager	6407 DIN 625	010 540 6	1
43	Paßfeder	B12x8x28 DIN 6885-geh.	011 487 1	1
42	Pendelrollenlager	22308 DIN 635	010 593 7	1
41	Sicherungsring	110x4 DIN 472	010 328 4	1
39	Sicherungsring	110x4 DIN 472	010 328 4	1
38	Paßscheibe	90x110x0,3 DIN 988-St	010 406 X	X)
38	Paßscheibe	90x110x0,1 DIN 988-St	010 382 9	X)
37	Kegelrollenlager	30310 DIN 720	012 469 9	1
36	Nilos-Ring	30310 AV	013 653 0	1
34	Zylinderrollenlager	NUP 2310 E DIN 5412	013 707 3	1
31	Paßfeder (3-stufig)	B16x10x40 DIN 6885-geh.	011 005 1	1
31	Paßfeder (2-stufig)	B14x9x40 DIN 6885-geh.	010 060 9	1
30	Kegelrollenlager	30308 DIN 720	010 604 6	1
29	Dichtung		107 403 2	1
28	Sicherungsring	75x4 DIN 471	010 310 1	1

SEW-EURODRIVE GmbH & Co

D-7520 Bruchsal · Industriestraße 42 · Postfach 23 40 · Telefon (0 72 51) 75-0 · Telefax (0 72 51) 75-211 · Telex 7 822 39

Einzelteilliste

SEW EURODRIVE

Flachgetriebe
FA 90

42 255

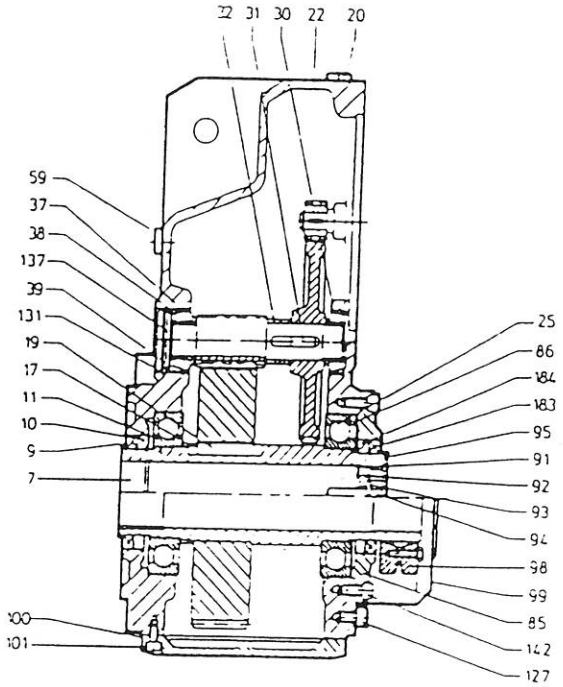

2-stufige Ausführung

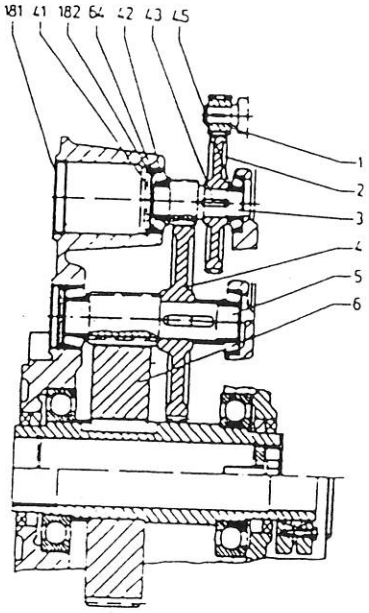

3-stufige Ausführung

Lfd. Nr.	Benennung	DIN-Bezeichnung		Sach-Nr.	Stück
1	Ritzel				
2	Rad				1
3	Ritzelwelle				1
4	Rad				1
5	Ritzelwelle				1
6	Rad				1
7	Hohlwelle			120 860 8	1
7	Hohlwelle (Schrumpf-Ausf.)			122 637 1	1
9	Wellendichtring	AS95×125×12	DIN 3760-NB	010 674 7	1
10	Wellendichtring	A95×125×12	DIN 3760-NB	011 316 6	1
11	Rillenkugellager	6220-Z	DIN 625	011 726 9	1
17	Distanzrohr			120 867 5	1
19	Paßfeder	B22×14×63	DIN 6885	011 493 6	1
20	Entlüftungsschraube	AM22×1.5		010 468 X	1
22	Getriebegehäuse			114 653 X	1
25	Rillenkugellager	6220-Z	DIN 625	011 726 9	1
30	Kegelrollenlager	30207	DIN 720	012 480 X	1
31	Paßfeder	B12×8×28	DIN 6885-gen.	011 487 1	1
32	Distanzrohr			114 058 2	1
37	Kegelrollenlager	33207	DIN 720	012 483 4	1
38	Paßscheibe	63×72×0.1	DIN 988-St	012 051 0	X)
38	Paßscheibe	63×72×0.3	DIN 988-St	012 052 9	X)
38	Paßscheibe	63×72×0.5	DIN 988-St	012 053 7	X)
39	Sicherungsring	72×2.5	DIN 472	010 322 5	1
41	Sicherungsring	72×2.5	DIN 472	010 322 5	1
42	Kegelrollenlager	31306	DIN 720	012 482 6	1
43	Paßfeder	B8×7×20	DIN 6885	011 599 1	1

Lfd. Nr.	Benennung	DIN-Bezeichnung		Sach-Nr.	Stück
45	Kegelrollenlager	31305	DIN 720	012 481 8	
59	Verschlußschraube	M22×1.5		011 431 6	
64	Paßscheibe	63×72×0.1	DIN 988-St	012 051 0	X
64	Paßscheibe	63×72×0.3	DIN 988-St	012 052 9	X
64	Paßscheibe	63×72×0.5	DIN 988-St	012 053 7	X
85	Dichtringflansch			122 887 0	
86	Paßscheibe	150×180×0.1	DIN 988-St	011 331 X	X
86	Paßscheibe	150×180×0.3	DIN 988-St	011 346 8	X
86	Paßscheibe	150×180×0.5	DIN 988-St	011 352 2	X
91	Sicherungsring	70×2.5	DIN 472	010 337 3	
92	Scheibe			103 465 0	
93	Federring	B20	DIN 127	010 996 7	
94	Sechskantschraube	M20×50	DIN 933-8.8	010 128 1	
95	Schutzkappe			114 081 7	
98	Schrumpfscheibe	95-72		122 641 X	
99	Abdeckhaube			122 640 1	
100	Getriebedeckel			120 849 7	
101	Zylinderschraube	M10×20	DIN 912-8.8	012 316 1	10
127	Zylinderschraube	M12×20	DIN 6912-8.8	010 162 1	2
131	Verschlußkappe	72×9		010 692 5	
137	Stützscheibe	S63×72×3	DIN 988-St	012 033 2	
142	Zylinderschraube	M16×35	DIN 6912-8.8	010 167 2	6
181	Verschlußkappe	80×12		010 693 3	1
182	Stützscheibe	S63×72×3	DIN 988-St	012 033 2	1
183	Wellendichtring	AS95×125×12	DIN 3760-NB	010 674 7	1
184	Wellendichtring	A95×125×12	DIN 3760-NB	011 316 6	1

Bei Ersatzteilbestellung bitte Leistungsschildداten mit Fabrikationsnummer und Benennung mit Sachnummer angeben! Die Ritzel und Zahnräder haben aufgeschla gene Sachnummern, welche stets anzugeben sind. Schmierstoff und Schmierstoffmenge siehe entsprechende Tabelle!
Bei Getriebemotoren jeder Art sind antriebsseitige Motoren, Verstellgetriebe oder spezielle Deckel angebaut.
Einzelteile hierfür siehe entsprechende Einzelteilliste.

X) nach Bedar

KD 393

Übersetzung (D) EINZELTEILLISTE*)	Translation: Parts List*)	(GB) Traduction Coupe-Pièces*)	(F) Traduzione Lista particolari*)	(I) Traducción Lista de piezas de repuesto*)

R
RF
RÜF
RX
RXF

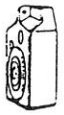

FA
FAF

K
KA
KF
KAF
KH

S
SA
SF
SAF

Stirnradgetriebe Flachgetriebe Kegelradgetriebe Schneckengetriebe Antriebsseitiger Deckel	Helical Gear Unit Shaft Mounted Helical Gear Unit Helical-Bevel Gear Unit Helical-Worm Gear Unit Input shaft assembly	Réducteur à engrenages cylindriques Réducteur à arbres parallèles Réducteur à couple conique Réducteur à vis sans fin Couvercle d'entrée	Rid. ad ingranaggi cilindrici Rid. piatti ad albero cavo Rid. a coppia conica Rid. a vite senza fine Coperchio d'entrata	Reductores de engranes cilíndrico Reductores de árboles paralelos Reductores de grupo cónico Reductores de tornillo sin fin Tapa entrada
1 Ritzel	Pinion	Pignon	Pignone	Piñon
2 Schnecke	Worm	Vis sans fin	Vite senza fine	Tornillo sin fin
2 Rad	Gear wheel	Roue	Ruota	Rueda
3 Ritzelwelle	Pinion shaft	Arbre pignon	Albero con pignone	Arbol piñon
3 Kegelradsatz	Bevel gear set	Train d'engrenage conique	Coppia conica	Trenes de engranajes conico
4 Rad	Gear wheel	Roue	Ruota	Rueda
5 Ritzelwelle	Pinion shaft	Arbre pignon	Albero con pignone	Arbol piñon
5 Schnecke	Worm	Vis sans fin	Vite senza fine	Tornillo sin fin
6 Rad	Gear wheel	Roue	Ruota	Rueda
6 Schneckenrad	Worm gear wheel	Roue à vis sans fin complète	Ruota per vite s f	Rueda sin fin como
7 Abtriebsseitige Welle	Output shaft	Arbre de sortie	Albero d uscita	Arbol de salida
7 Hohlwelle KDI	Hollow shaft complete	Arbre creux complet	Albero cavo	Arbol hueco comp.
7 Schneckenradwelle	Worm gear wheel shaft	Arbre vis sans fin	Albero d uscita	Arbol sin fin
7 Schneckenradwelle 2 WE	Double ended worm gear wheel shaft	Arbre vis sans fin 2 B A	Albero per doppia uscita	Arbol sin fin 2 EX. E
8 Paßfeder	Key	Clavette	Linguetta	Chaveta
9 Wellendichtring	Oil seal	Bague d etanchéité	Anello di tenuta	Casquillo de estanqueidad
10 Wellendichtring	Oil seal	Bague d etanchéité	Anello di tenuta	Casquillo de estanqueidad
11 Wälzlager	Bearing	Roulement	Cuscinetto	Rodamientos
12 Sicherungsring	Circlip/Snapring	Circlips	Anello di sicurezza	Arandela elastica
13 Wälzlager	Bearing	Roulement	Cuscinetto	Rodamientos
14 Schraube	Screw	Vis	Vite	Tornillo
15 Federring	Lock washer	Rondelle Grower	Rosetta elastica	Arandela Grower
16 Abtriebsseitiger Deckel	Output cover	Couvercle de sortie	Coperchio d uscita	Registro de salida
16 Abtriebsseitiger Flansch	Output flange	Flasque de sortie	Calotta flangiata	Brida de salida
16 Dichtringflansch	Oil seal flange	Flasque d etanchéité	Coperchietto	Tapa de estanqueidad
16 Zentrierflansch	Centering flange	Flasque de centrage	Flangia di centraggio	Brida de centraje
16 Fußdeckel	Cover with foot	Couvercle à pattes	Coperchio con piedi	Tapa de patas
17 Distanzring	Distance piece	Entretoise	Distanziale	Tubo separador
18 Paßscheibe	Shim	Cinquant	Distanziale di compenso	Arandela de ajuste
19 Paßfeder	Key	Clavette	Linguetta	Chaveta
20 Entlüftungsschraube	Breather plug	Bouchon event	Tappo con foro di sfiato	Tapon aireador
21 Wälzlager	Bearing	Roulement	Cuscinetto	Rodamientos
22 Getriebegehäuse	Gear housing	Carter	Carcassa	Carter
23 Stützscheibe / Distanzring	Spacer / Distance piece	Rondella d epaulement / Entretoise	Distanziale	Arandela de apoyo / Tubo separador
24 Ringschraube	Lifting eyebolt	Anneau de suspension	Golfare	Cancamo
25 Wälzlager	Bearing	Roulement à billes	Cuscinetto	Rodamientos
26 Paßscheibe	Shim	Cinquant	Distanziale di compenso	Arandela de ajuste
27 Stützscheibe	Spacer	Rondelle d epaulement	Distanziale	Arandela de apoyo
28 Sicherungsring	Circlip / Snapring	Circlips	Anello di sicurezza	Arandela elastica
29 Dichtung	Gasket	Joint	Guarnizione	Junta
30 Wälzlager	Bearing	Roulement	Cuscinetto	Rodamientos
31 Paßfeder	Key	Clavette	Linguetta	Chaveta
32 Distanzring	Distance piece	Entretoise	Distanziale	Tubo separador
33 Sicherungsring	Circlip / Snapring	Circlips	Anello di sicurezza	Arandela elastica
34 Wälzlager	Bearing	Roulement	Cuscinetto	Rodamientos
35 Sicherungsring	Circlip / Snapring	Circlips	Anello di sicurezza	Arandela elastica
36 Nilos-Ring	Nilos ring	Bague Nilos	Anello Nilos	Anillo Nilos
37 Wälzlager	Bearing	Roulement	Cuscinetto	Rodamientos
38 Paßscheibe	Shim	Cinquant	Distanziale di compenso	Arandela de ajuste
39 Sicherungsring	Circlip / Snapring	Circlips	Anello di sicurezza	Arandela elástica

Lfd. Nr	Benennung	DIN	Sach-Nr.	Stück	Description	DIN	Part No.	QTY	Designation	DIN	No Ident.	Nbre	Denominazione	DIN	N. mag.	Q. tà	Denominacion	DIN	Nº de pied.	Num. de piez.

SEW-EURODRIVE GmbH & Co
W-7520 Bruchsal · Ernst-Blickle-Straße 42 · Postfach 23 40 · Telefon (0 72 51) 75-0 · Telefax (0 72 51) 75-1970 · Telex 7 822 39

Übersetzung (D) EINZELTEILLISTE*)	Translation: (GB) Parts List*)	Traduction (F) Coupe-Pièces*)	Traduzione (I) Lista particolari*)	Traducción (E) Lista de piezas de repuesto*)
R RF RÜF RX RXF	FA FAF	K KA KF KAF KH	S SA SF SAF	
Stirnradgetriebe Flachgetriebe Kegelradgetriebe Schneckengetriebe Antriebsseitiger Deckel	Helical Gear Unit Shaft Mounted Helical Gear Unit Helical-Bevel Gear Unit Helical-Worm Gear Unit Input shaft assembly	Réducteur à engrenages cylindriques Réducteur à arbres parallèles Réducteur à couple conique Réducteur à vis sans fin Couvercle d'entrée	Rid. ad ingranaggi cilindrici Rid. paralleli ad albero cavo Rid. a coppia conica Rid. a vite senza fine Coperchio d'entrata	Reductores de engranes cilíndricos Reductores de árboles paralelos Reductores de grupo cónico Reductores de tornillo sin fin Tapa entrada

100	Getriebedeckel	Gear cover plate	Couvercle de carter	Coperchio carcassa	Tapa superior carter
101	Schraube	Screw	Vis	Vite	Tornillo
102	Dichtung	Gasket	Joint	Guarnizione	Junta
104	Lagerflansch	Bearing flange	Chapeau palier	Calotta supporto	Sombrerete
105	Schraube	Screw	Vis	Vite	Tornillo
106	Paßscheibe	Shim	Cinquant	Distanziale di compenso	Arandela de ajuste
107	Paßscheibe	Shim	Cinquant	Distanziale di compenso	Arandela de ajuste
108	Lagerflansch	Bearing flange	Chapeau palier	Calotta supporto	Sombrerete
109	Schraube	Screw	Vis	Vite	Tornillo
110	Zwischenflansch	Adapter flange	Flasque intermédiaire	Flangia intermedia	Brida intermedia
111	Dichtung	Gasket	Joint	Guarnizione	Junta
112	Schraube	Screw	Vis	Vite	Tornillo
113	Nutmutter	Slotted round nut	Ecrou à encoche	Ghiera	Tuerca de muesca
114	Sicherungsblech	Multi-tang washer	Rondelle frein	Rosetta di sicurezza	Arandela-freno
115	Sicherungsring	Circlip / Snapring	Circlips	Anello di sicurezza	Arandela elastica
116	Paßscheibe	Shim	Cinquant	Distanziale di compenso	Arandela de ajuste
117	Distanzring	Distance ring	Bague d'écartement	Anello di spallamento	Anillo de separación
118	Distanzring	Distance piece	Entretoise	Distanziale	Tubo separador
119	Distanzring	Distance piece	Entretoise	Distanziale	Tubo separador
120	Paßscheibe	Shim	Cinquant	Distanziale di compenso	Arandela de ajuste
121	Paßscheibe	Shim	Cinquant	Distanziale di compenso	Arandela de ajuste
122	Paßfeder	Key	Clavette	Linguetta	Chaveta
123	Welle für Kegelritzel	Shaft for bevel pinion	Arbre pour pignon conique	Albero per pignone conico	Árbol para piñon cónico
124	Paßscheibe	Shim	Cinquant	Distanziale di compenso	Arandela de ajuste
125	Sicherungsring	Circlip / Snapring	Circlips	Anello di sicurezza	Arandela elastica
126	Schraube	Screw	Vis	Vite	Tornillo
127	Schraube	Screw	Vis	Vite	Tornillo
128	Schraube	Screw	Vis	Vite	Tornillo
129	Lagerdeckel	Bearing cover	Couvercle de palier	Coperchietto	Tapacubos
130	Dichtung	Gasket	Joint	Guarnizione	Junta
131	Verschlußkappe	Closing cap	Bouchon cuvette	Scodellino	Tapon de cubeta
132	Sicherungsring	Circlip / Snapring	Circlips	Anello di sicurezza	Arandela elastica
133	Stützscheibe	Spacer	Rondelle d'épaulement	Distanziale	Arandela de apoyo
134	Paßscheibe	Shim	Cinquant	Distanziale di compenso	Arandela de ajuste
135	Nilos-Ring	Nilos ring	Bague Nilos	Anello Nilos	Anillo Nilos
136	Distanzring	Distance ring	Bague d'écartement	Anello di spallamento	Anillo de separación
137	Stützscheibe	Spacer	Rondelle d'épaulement	Distanziale	Arandela de apoyo
138	Nilos-Ring	Nilos ring	Bague Nilos	Anello Nilos	Anillo Nilos
139	Dichtung	Gasket	Joint	Guarnizione	Junta
140	Lagerdeckel	Bearing cover	Couvercle de palier	Coperchietto	Tapacubos
141	Schraube	Screw	Vis	Vite	Tornillo
142	Schraube	Screw	Vis	Vite	Tornillo
143	Federring	Lock washer	Rondelle Grower	Rosetta elastica	Arandela Grower
144	Mutter	Nut	Ecrou	Dado	Tuerca
145	Zylinderkerbstift	Dowel pin	Goupille cylindrique	Spina cilindrica	Pasador cilíndrico
146	Federring	Lock washer	Rondelle Grower	Rosetta elastica	Arandela Grower
147	Mutter	Nut	Ecrou	Dado	Tuerca
148	Dichtung	Gasket	Joint	Guarnizione	Junta
151	Dichtnngflansch	Oil seal flange	Flasque d'étanchéité	Coperchietto	Brida de estanqueidad
152	Dichtung	Gasket	Joint	Guarnizione	Junta
154	Schraube	Screw	Vis	Vite	Tornillo
156	Verschlußkappe	Closing cap	Bouchon cuvette	Scodellino	Tapón de cubeta

Lfd. Nr.	Benennung	DIN	Sach-Nr.	Stück	Description	DIN	Part No.	QTY	Designation	DIN	No ident.	Ndre	Denomi-nazione	DIN	N. mag.	Q. tà.	Deno-minacion	DIN	Nº de ped.	Num. de piez

SEW-EURODRIVE GmbH & Co

W-7520 Bruchsal · Ernst-Blickle-Straße 42 · Postfach 23 40 · Telefon (0 72 51) 75-0 · Telefax (0 72 51) 75-1970 · Telex 7 822 39

Übersetzung (D) EINZELTEILLISTE*)	Translation: (GB) Parts List*)	Traduction (F) Coupe-Pièces*)	Traduzione (I) Lista particolari*)	Traducción (E) Lista de piezas de repuesto*)

R
RF
RÜF
RX
RXF

FA
FAF

K
KA
KF
KAF
KH

S
SA
SF
SAF

Stirnradgetriebe Flachgetriebe Kegelradgetriebe Schneckengetriebe Antriebsseitiger Deckel	Helical Gear Unit Shaft Mounted Helical Gear Unit Helical-Bevel Gear Unit Helical-Worm Gear Unit Input shaft assembly	Réducteur à engrenages cylindriques Réducteur à arbres parallèles Réducteur à couple conique Réducteur à vis sans fin Couvercle d'entrée	Rid. ad ingranaggi cilindrici Rid. piatti ad albero cavo Rid. a coppia conica Rid. a vite senza fine Coperchio d'entrata	Reductores de engranes cilíndricos Reductores de árboles paralelos Reductores de grupo cónico Reductores de tornillo sin fin Tapa entrada
244 Säule	Column	Colonne	Colonna	Columna
245 Schraube	Screw	Vis	Vite	Tornillo
272 O-Ring	O-ring	Joint torique	Guarnizione	Junta tórica
273 Stützscheibe	Spacer	Rondelle d'épaulement	Distanziale	Arandela de apoyo
274 Laufbuchse	Oil seal sleeve	Douille	Boccola anticorrosione	Pasador
275 Padscheibe	Shim	Cinquant	Distanziale di compenso	Arandela de ajuste
276 Nilosring	Nilos-ring	Bague Nilos	Guarnizione	Anillo Nilos
277 Sicherungsring	Circlip / Snapring	Circlips	Anello di sicurezza	Arandela elástica
278 Wellendichtring	Oil seal	Rondelle d'étanchéité	Guarnizione	Arandela de estanqueidad
279 Sicherungsring	Circlip / Snapring	Circlips	Anello di sicurezza	Arandela elástica
280 Stützscheibe	Spacer	Rondelle d'épaulement	Distanziale	Arandela de apoyo
316 Spritzscheibe	Oil flinger	Déflecteur	Deflettore	Deflector
318 Steigrohr	Riser pipe	Tube d'expansion	Tubo di sfiato	Tubo expansión
319 Sonde	Probe	Sonde	Sonda	Sonda
320 Dichtring	Sealing ring	Joint	Guarnizione	Junta
321 Verschraubung	Fitting	Presse-étoupe	Raccordo	Prensa estopas
322 Verschraubung	Fitting	Presse-étoupe	Raccordo	Prensa estopas
323 Reduktion	Reducer	Réduction	Riduzione	Reducción
324 Schlauchverschraubung	Hose fitting	Raccord à vis pr tuyaux	Raccordo a vite	Unión
325 Befestigungsschelle	Fixing clamp	Collier de fixation	Fascia fissaggio	Anillo fijación
326 Schraube	Screw	Vis	Vite	Tornillo
327 Schutzschlauch	Protective hose	Tuyau de protection	Tubo di protezione	Tubo protección
328 Verschraubung	Fitting	Presse-étoupe	Raccordo	Prensa estopas
329 Ölwarngerät	Oil monitor	Indicat. niveau d'huile	Spia olio	Ind. nivel aceite
330 Mutter	Nut	Ecrou	Dado	Tuerca
331 Distanzteil	Distance piece	Entretoise	Distanziale	Separador

Lfd. Nr	Benennung	DIN	Sach-Nr.	Stück	Description	DIN	Part No.	QTY	Designation	DIN	No Ident.	Ndre	Denominazione	DIN	N mag.	O. I.&	Denominación	DIN	Nº de ped.	Num. de pieza

SEW-EURODRIVE GmbH & Co

W-7520 Bruchsal · Ernst-Blickle-Straße 42 · Postfach 23 40 · Telefon (0 72 51) 75-0 · Telefax (0 72 51) 75-1970 · Telex 7 822 391

DC Motors, DC Brake Motors and Accessories

Installation, Commissioning and Maintenance

Edition 8/95

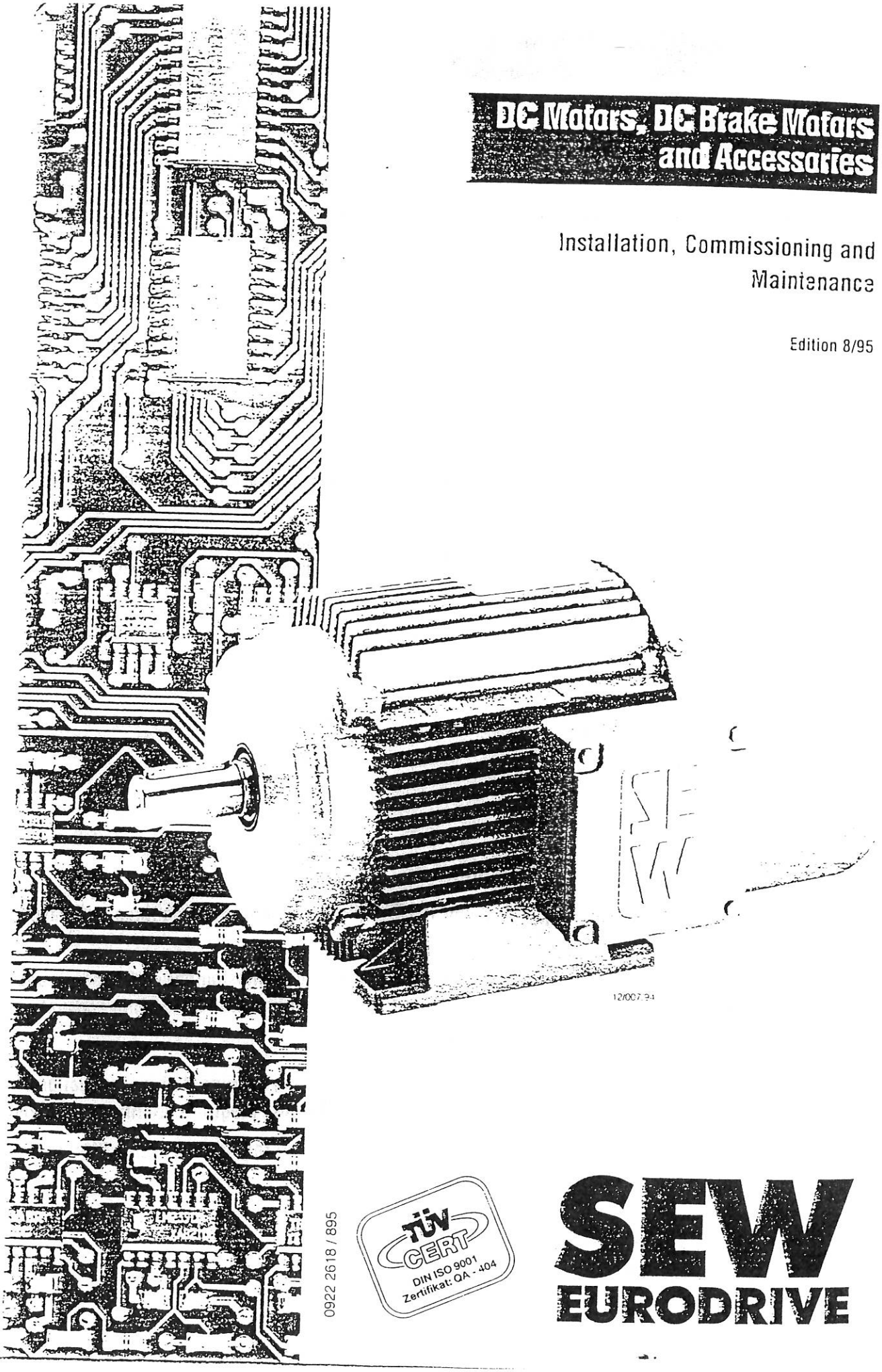

0922 2618 / 895

TÜV CERT
DIN ISO 9001
Zertifikat: QA - 404

SEW EURODRIVE

Table of Contents

1 Installation/Assembly

1.1 Before you begin

STOP

The drive should only be assembled if:

- **The entries on the name plate match the mains power supply**
- **The drive is undamaged (no damage caused by carriage or storage)**
- **It is certain that the following requirements have been fulfilled:**

Standard motors:	**Ambient temperature between –15 °C and +40 °C** [1]
	No oil, acid, gases, vapours, radiation, etc.
	Installation elevation max. 1000 metres above mean sea level.
Special designs:	**Drive made in accordance with the ambient conditions.**

1.2 Preparatory work after an extended period of storage

Check whether the motor has absorbed any moisture during the extended period of storage. For this purpose the insulation resistance must be measured (test voltage 500 V). Sufficient insulation resistance: 10 MΩ at 25 °C.

Note:

The insulation resistance is heavily dependent on the temperature!
If the insulation resistance is insufficient, the motor must be dried as follows:

1. Warm up the motor (to a maximum of 80 °C)
   - using warm air or
     by supplying the field winding with reduced current
     - at max. 20 % of the rated current.
2. End the drying process when the insulation resistance is 0.4 MΩ at 80 °C
3. Check the terminal boxes to ensure that:
   - the insides are clean and dry
   - connecting and mounting components are free of corrosion
   - joint seals are in order
   - screwed cable glands are tight

   If not, clean or replace them.

1) Remember that the temperature range of the gear unit may also be restricted
→ Installation and Commissioning Instructions for the gear unit

2. Electrical connection

- The rated voltage and current of the DC motor must agree with those of the supplying DC converter.
- Do not switch the motor in the field or armature circuits if it can be avoided. If switching the motor in the field or armature circuits cannot be avoided, use suitable standard DC contactors.
- **Switch contacts in duty class AC-3 in accordance with IEC 158 must be used for switching the brake.**

2.1 Before you begin

Tools/resources required

- Standard tools

2.2 Connecting the motor

The relevant commissioning instructions of the DC converter must be observed!

1. Connect the motor
   - in accordance with the circuit diagram (enclosed)
   - fit the terminal links correctly
   - screw the connections and protective conductor together tightly

2.3 Connecting the brake

The brake is released electrically. Braking takes place mechanically when the power supply has been switched off.

1. Connect the brake
   - in accordance with the respective circuit diagram (enclosed).

Note:
Observe the applicable instructions of the responsible employers' liability insurance associations on phase failure protection and the allied circuits and/or modifications to circuits.

2.3.1 Connecting the brake control unit

The DC disc brake is fed from a brake rectifier/control unit with a suppressor circuit, which is either housed in the terminal box or must be installed in the switch cabinet.

1. Connect the brake control unit
   - in accordance with the circuit diagram supplied.

4 Inspection and maintenance

Only use original spare parts in accordance with the valid parts list (enclosed with the acknowledgement of the order).

4.1 Inspection and maintenance periods

Frequency	Equipment/ Component	What to do	Please refer to section
At least every **3,000** hours of operation	Motor	Inspect the motor Clean the cooling air passage if necessary **Carefully remove any abrasive dust and/or carbon dust.**	4.3 et seq.
The periods of wear are affected by many factors and especially by emergency braking operations. **If used as working brake** at least every **3,000** hours of operation. **If used as holding brake** according to loading factor every 2 to 4 years.	Brake	Inspect the brake - Working air gap - Brake disc Extract the abraded matter Inspect the switching elements, and replace where necessary (e.g. in case of contact erosion).	4.4 et seq.
Every **10,000** hours of operation	Motor	Inspect the ball bearings and replace if necessary	
	Tachogenerator	Inspection/maintenance in accordance with the installation and operating instructions supplied	
Touch up or renew the anti corrosion coating if scratched or peeled off.			

4.2 Before you begin

Tools/resources required

- Standard tools
- Pull-off device
- Feeler gauge
- Voltmeter (measuring range V, mV_{AC})
- Pumice stone

4.3.2 Replacing carbon brushes

STOP

Replace carbon brushes for ones of similar quality! The brush-holder support must not be moved from the neutral zone during brush replacement or when checking the carbon brushes!

Motors up to Size 100

1. Lift spring lever, remove carbon brushes
2. Insert new carbon brushes, lower spring levers
3. Bed in carbon brushes → section 4.3.2.2
4. Re-fit motor → section 4.3.1, point 6

Motors from Size 112 upwards (*Figs. 2 and 3*)

1. Press coil-spring holder in direction of arrow (observe sequence) (*Fig. 2*)
2. Pull coil-spring holder upwards, tilt over as shown by arrow 4 (*Fig. 3*)
3. Remove carbon brush, inspect coil spring/coil-spring holder → section 4.3.2.1
4. Insert carbon brush (use new one if necessary)
5. Set coil spring holder vertically
   - correct: coil spring lies in top groove of the carbon brush
6. Move coil-spring holder into operating position, press in (up to stop) in direction of Arrow 1
7. Bed in carbon brushes → section 4.3.2.2
8. Re-fit motor → section 4.3.1 point 6

4.3.2.1 Inspecting/replacing coil spring and coil-spring holder (Figs. 4 and 5)

1. Coil-spring holder
   a) Rotate through 90°,
   b) Slide in direction of arrow 5 until disengagement
2. Test coil spring
   - change if kinked
3. Install coil-spring holder (use new one if necessary)
   - attach in direction of arrow 6
   - press against coil spring until engagement
4. → section 4.3.2, points 4 to 7

Note:

When re-inserting the coil-spring holder, ensure that
- the coil spring is sitting centrally
- the carbon brushes can move freely in the brush holder

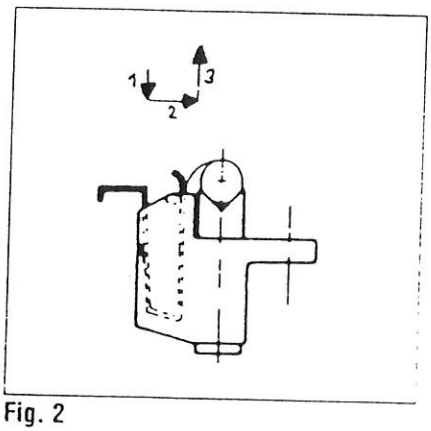

Fig. 2

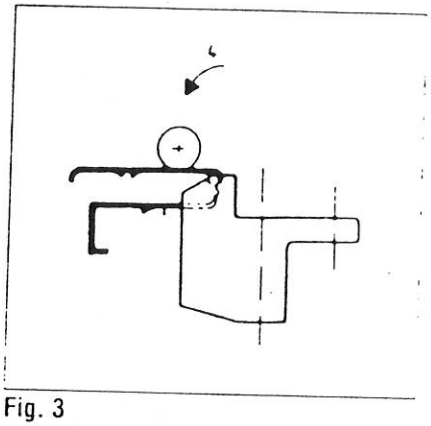

Fig. 3

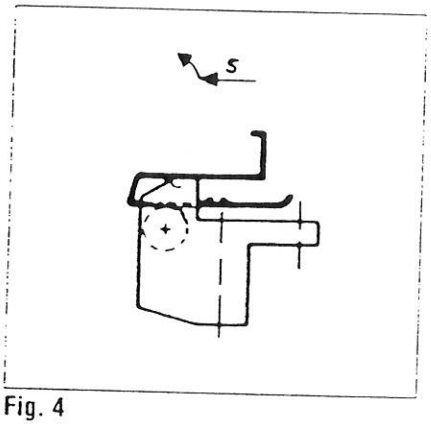

Fig. 4

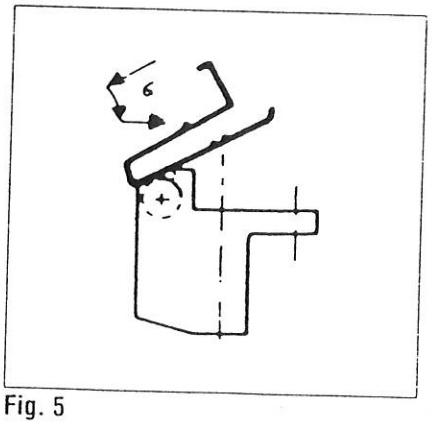

Fig. 5

4.3.5 Digression: brush sparking

Sparking of greater or lesser severity is occasionally observed at the leaving edge of the carbon brushes when the motor is running. The motor must be operated with the brush window open to check this!

There are two possible causes of sparking:
- electrical: commutation faults due to over or under-commutation, overload, rate of current rise (dI/dt) too high, unsuitable brush etc.,
- mechanical: impacts and vibration, excessive friction, lack of concentricity, out-of-balance or deformation of the commutator, insufficient brush pressure etc..

Effects

Severe sparking causes damage
- at the brush: it increases its wear
- at the commutator: it destroys it by removing metal

Characteristics

The destructive effect of sparking is dependent on:
- its intensity
- its colour:
  - little violet sparks are generally harmless: they only involve the brush
  - red sparks (with or without sprays of glowing carbon particles) are caused by overload. They cause increased brush wear
  - blue, gleaming and flashing sparks with glowing particles generally indicate a serious commutation fault: they accelerate the wear of the brushes and destroy the commutator
  - green and large sparks always in conjunction with glowing particles indicate a serious fault in the operation of the motor and precede a flashover. They destroy commutator and brushes.

Classification

It is often necessary to have a brief and succinct way of describing the severity of sparking. This is why the individual grades of sparking have been classified *(Fig. 7)*.

The usual limits are at
- normal operation: Index 5
- impact or overload: Index 4 to 5

With Index 1 to 4, check the following immediately:
- load current
- rate of current rise
- is heavy mechanical vibration occurring?
- has the motor stood stationary for a long time (locking) under maximum current?
- is the commutator deformed?
- is the brush pressure too low?

Inspect commutator and carbon brushes after eliminating the fault → section 4.3.1

Illustration	Index	Description
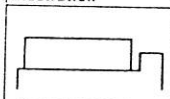	6	Black
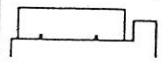	5-6	Discontinuous pearls
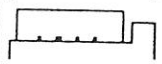	5	Some pearls
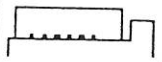	4-5	Numerous pearls
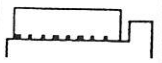	4	Discontinuous spray
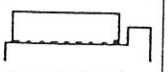	3	Some particle spray
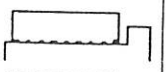	2	Numerous particles spray
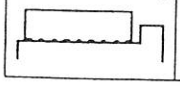	1	Substantial and continuous spray

Fig. 7

Drehstrommotoren

DFT 180 M und L

Anbau an alle Getriebetypen ① Größe 90; ② Größe 100; ③ Größe 130; ④ Größe 120+140; ⑤ Größe 150+160;

EINZELTEILLISTE

08 576 02

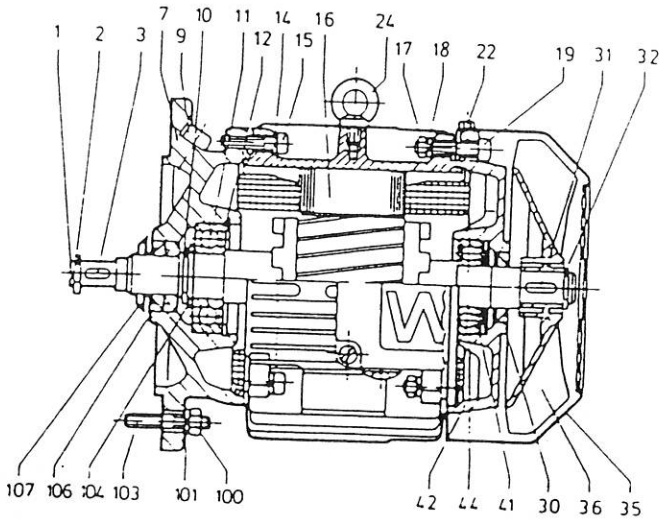

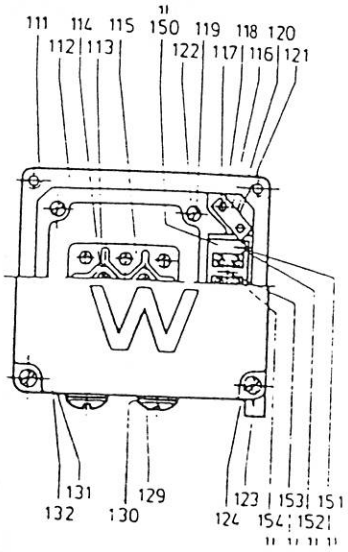

Bei Ersatzteilbestellung bitte Leistungsschilddaten mit Fabrikationsnummer und Benennung mit Sachnummer angeben!

Lfd. Nr.	Benennung	DIN-Bezeichnung	Sach-Nr.	Stck
100	Sechskantmutter ①	M12 DIN 934-8	010 201 6	4
44	Rillenkugellager	6313 C3-2Z DIN 625	011 732 3	1
42	B-Lagerschild	·	136 399 9	1
41	Tellerfeder	119x85.5x1.25x2.8	012 419 2	2
36	Lüfter		136 609 2	1
35	Lüfterhaube		136 405 7	1
32	Sicherungsring	60x2 DIN 471	010 292 X	1
31	Paßfeder	A18x11x40 DIN 6885	011 013 2	1
30	Wellendichtring	A70x90x10 o. F DIN 3760	011 202 X	1
24	Ringschraube	M12 DIN 580-C15	010 230 X	1
22	Sechskantschraube	M8x12 DIN 933-8.8	012 264 5	4
19	Zylinderschraube	M10x55 DIN 912-8.8	012 308 0	4
18	Federring	10 DIN 7980-phr.	010 258 X	4
17	Sechskantmutter	M10 DIN 934-8	010 200 8	4
16	Flansch-Ständer			1
15	Zylinderschraube	M10x45 DIN 912-8.8	012 306 4	4
14	Federring	10 DIN 7980-phr.	010 258 X	1
12	Sicherungsring	130x4 DIN 472	010 330 6	1
11	Rillenkugellager	6312 C3-Z DIN 625	011 748 X	1
10	Sicherungsring	60x2 DIN 471	010 292 X	1
9	Verschlußschraube ⑤	M42x2	011 427 8	1
9	Verschlußschraube ④	M33x2	011 432 4	1
9	Verschlußschraube ①②③	M22x1,5	011 431 6	1
7	Flanschlagerschild ⑤		181 294 7	1
7	Flanschlagerschild ④		181 293 9	1
7	Flanschlagerschild ③		181 292 0	1
7	Flanschlagerschild ②		181 291 2	1
7	Flanschlagerschild ①		181 290 4	1
3	Paßfeder	A8x7x32 DIN 6885	010 020 X	1
2	Sicherungsring	32x1,5 DIN 471	010 278 4	1
1	Läufer kpl. L-6		181 653 5	1
1	Läufer kpl. L-8/2		181 308 0	1
1	Läufer kpl. L-4		181 307 2	1
1	Läufer kpl. M-8/2		181 306 4	1
1	Läufer kpl. M-4		181 301 3	1

*) Teile für TF-Ausführung

Lfd. Nr.	Benennung	DIN-Bezeichnung	Sach-Nr.	Stck
154	Blechschraube *)	B3,5x19 DIN 7981-Zn	011 701 3	2
153	Klemmleiste *)	6-3 DS	011 923 7	1
152	Federring *)	4 DIN 7980-phr	010 254 7	2
151	Zylinderschraube *)	AM4x10 DIN 84-4.8	011 705 6	2
150	Zwischenplatte *)		136 796 X	1
132	Klemmenkasten-Deckel		180 014 0	1
131	Dichtung z. T. 132		180 019 1	1
130	Dichtring	A38x44 DIN 7603-Gi	011 914 8	2
129	Verschlußschraube	N Pg 29 DIN 46320-Fs	010 833 2	2
124	Federring	6 DIN 7980-phr.	010 256 3	4
123	Zylinderschraube	AM6x20 DIN 84-4.8	010 190 7	4
122	Federring	8 DIN 7980-phr.	010 257 1	4
121	Senkkerbnagel	4x12 DIN 1477-4.6-vn8	011 905 9	1
120	Erdungsklemme unten		180 169 4	1
119	Zylinderschraube	AM8x20 DIN 84-4.8	010 193 1	4
118	Federring	6 DIN 7980-vn	011 821 4	2
117	Sechskantschraube	M6x20 DIN 933-A2	011 855 9	2
116	Erdungsklemme oben		180 136 8	1
115	Klemmenplatte	K1M8 DIN 46292	010 799 9	1
114	Federring	8 DIN 7980-phr.	010 257 1	2
113	Zylinderschraube	M8x25 DIN 912-8.8	011 034 5	2
112	Klemmenkasten Unterteil		180 073 6	1
111	Dichtung z. T. 112		136 415 4	1
109	Halbrundkerbnagel	2x4 DIN 1476-X5 CrNi 19.11	010 764 6	2
108	Leistungsschild			1
107	Spritzscheibe	55	011 667 X	1
106	Wellendichtring	A55x90x8 DIN 3760-NB	012 074 X	1
104	Stützscheibe	S60x75x3 DIN 988-St	010 360 8	1
103	Stiftschraube ⑤	M16x45 DIN 939-8.8	011 261 5	4
103	Stiftschraube ③④	M16x40 DIN 939-8.8	010 086 2	4
103	Stiftschraube ②	M16x35 DIN 939-8.8	010 085 4	4
103	Stiftschraube ①	M12x30 DIN 939-8.8	010 081 1	4
101	Federring ②③④⑤	B16 DIN 127	010 995 9	4
101	Federring ①	B12 DIN 127	010 993 2	4
100	Sechskantmutter ②③④⑤	M16 DIN 934-8	010 203 2	4

SEW-EURODRIVE GmbH & Co

D-7520 Bruchsal · Industriestraße 42 · Postfach 23 40 · Telefon (0 72 51) 75-0 · Telefax (0 72 51) 75-211 · Telex 7 822 391

EB 8/820116

DT, DFT, DV, DFV, eDT, eDFT, eDV, eDFV
G, GF, GV, GFV

SEW EURODRIVE

Übersetzung (D) EINZELTEILLISTE	Translation: (GB) Parts List	Traduction (F) Coupe-Pièces	Traduzione (I) Lista particolari	Traducción (E) Lista de piezas de repuesto
Drehstrom/-Bremsmotoren Gleichstrom/-Bremsmotoren	AC Squirrel-Cage Motors resp. Brake Motors DC Motors resp. DC Brake Motors	Mot. triphases - mot. triphases avec frein/Mot. courant continu - mot. courant continu avec frein	Motori elettrici Motori autofrenanti B Tipo: DT + GT Motori corrente continua	Mot. trifasicos - mot. trifasicos con freno Mot. corriente continua - mot. corriente continua con freno
Fußausführung	Foot mounting IEC	Execution à pattes CEI	Esecuzione con piedi IEC	Ejecución con patas CEI
Getriebeanbau	For mounting to gear units	Pour montage sur réducteur	Accoppiamento a riduttori	Para montaje sobre reductores
Zusatzausführung: Geber, Fremdlüftung, Mikroschalter, Rücklaufsperre	Ancillary accessories: Tachogenerators, forced cooling, micro-switches, backstops	Executions supplémentaires: génératrice, ventilation forcée, Micro-contact, frein de recul	Accessori: generatore, ventilazione forzata, microinterruttore, antiritorno	Ejecuciones complementarias: generatriz, ventilación forzada, micro-contacto, freno contra rotación
Anbau an alle Getriebetypen Größe ...	For mounting to all gear unit types size ...	Pour montage sur tous réducteurs grandeurs	Accoppiamento a tutti tipi di riduttori di grandezza	Para montaje sobre todos los reductores
Bei Ersatzteilbestellung bitte Abmessung angeben!	When ordering as a spare part please quote the dimensions!	En cas de commande de pièces de rechange, prière d'indiquer les dimensions!	Nel richiedere il pezzo di ricambio precisare le dimensioni	En caso de pedido de piezas de recambio, rogamos indiquen las dimensiones
Bei Ersatzteilbestellung bitte LeistungsschildDaten mit Fabrikationsnummer und Benennung mit Sachnummer angeben!	When ordering please quote the serial number and all nameplate data. From the Spare Part List the description(s) and part number(s)!	En cas de commande de pièces de rechange, préciser les indications de la plaque signalétique, la désignation de la pièce et sa référence!	Nel richiedere parti di ricambio precisare i dati di targhetta con numero di matr. del gruppo completo e la denominazione dei particolari con relativo numero di magazzino!	En caso de pedido de piezas de recambio deben señalarse las indicaciones de la placa de características, la designación de la pieza y su número de pedido!
Teile bei Ständer (16) mitgeliefert:	Parts supplied together with stator (16):	Pièces livrées avec stator (16):	Particolari forniti con lo statore (16):	Piezas suministradas con estator (16)
Teile für Handlüftung	Parts for manual brake release	Pièces pour déblocage manuel	Particolari per sbloccaggio manuale	Piezas desbloqueo manual
Diese Zusatz (Einzelteil)-Liste ist jeweils mit der entsprechenden Motoren Einzelteilliste zu verwenden!	This supplementary parts list is to be used together with the appropriate motor parts list!	Cette liste de pièces complémentaires est à utiliser avec la liste des moteurs correspondant!	Questa lista supplementare va adoperata insieme con la relativa lista part di ricambio del motore	Esta lista de piezas complementarias debe utilizarse con la lista de los motores correspondientes
Teile nur TF-Ausführung	Parts for thermistor TF feature	Pièces pour exécution TF	Parti per l'esecuzione TF	Piezas para ejecución TF
Nur bei IP	Only for IP	Uniquement pour IP	Solamente per IP	Solamente para IP
nach Bedarf	As required	selon besoin	secondo necessità	Segun necesidad
Leistungsschild am Ständer (Ltd. Nr. 16) und am Klemmenkasten-Deckel (Ltd. Nr. 132)	Nameplates: One on the stator (Ltd. No. 16). One on the terminal box cover (Ltd. No. 132).	Plaque signalétique sur stator (réf. 16) et sur couvercle de boîte à bornes (réf. 132).	Targhette: una sullo statore (part. N. 16) una sul coperchio della scatola morsetti (N. 132)	Placa de características sobre estator (ref. 16) y sobre tapa de caja de bornas (ref. 132)
Leistungsschild am Ständer (Ltd. Nr. 16)	Nameplate on the stator (Ltd. No. 16).	Plaque signalétique sur stator (réf. 16)	Targhetta sullo statore (part. N. 16).	Placa de características sobre estator (ref. 16)
Teile nur bei Bremsausführung erforderlich	Parts only required for the brake feature	Pièces uniquement pour exécution frein	Particolari occorrenti solamente per esecuzione con freno	Piezas solamente para ejecución con freno
Anzahl nach Bremsmoment	Brake torque determines number	Quantité selon couple de freinage	Quantità secondo coppia freno	Segun deseos
Je nach Bremsmoment 2 Klebebleche erforderlich	Depending on brake torque 2 non-magnetic shims may be required	Selon couple de freinage 2 rondelles de séparation sont nécessaires	Per determinati valori di coppia frenante necessitano 2 rosette distanziali	Segun par de freno 2 arandelas de separacion son necesarias
Wälzlager	Bearings	Roulement à billes	Cuscinetto	Rodamientos
DIN 617 Nadellager	DIN 617 Needle roller bearing	DIN 617 Roulement à aiguilles	DIN 617 Cuscinetto a rullini	DIN 617 Rodamientos
DIN 625 Rillenkugellager	DIN 625 Deep groove ball bearing	DIN 625 Roulement à billes	DIN 625 Cuscinetto a sfere	DIN 625 Rodamientos de bolas
DIN 628 Schrägkugellager (Schrägkugellager gepaart)	DIN 628 Angular contact ball bearing (Matched angular contact ball bearings)	DIN 628 Roulement à billes à contact oblique (Roulement à billes à contact oblique jumelés)	DIN 628 Cuscinetto obliquo a sfere (Cusc. obl. sfere accopp.)	DIN 628 Rodamientos de bolas de contacto oblicuo (Rodamiento de bolas de contacto oblicuo, acoplados)
DIN 630 Pendelkugellager	DIN 630 Self-aligning ball bearing	DIN 630 Roulement à rotule	DIN 630 Cuscinetto a sfere orientabili	DIN 630 Rodamientos de rodillos
DIN 635 Pendelrollenlager	DIN 635 Self-aligning roller bearing	DIN 635 Roulement à rotule	DIN 635 Cuscinetto a rulli orientabili	DIN 635 Rodamientos de rodillos
DIN 711 Axial-Rillenkugellager	DIN 711 Deep groove ball thrust bearing	DIN 711 Butée à billes	DIN 711 Cuscinetto a sfere assiali	DIN 711 Rodamientos de bolas
DIN 720 Kegelrollenlager	DIN 720 Tapered roller bearings	DIN 720 Roulement à rouleaux coniques	DIN 720 Cuscinetto a rulli conici	DIN 720 Rodamientos a rodillos conicos
DIN 5412 Zylinderrollenlager	DIN 5412 Cylindrical roller bearings	DIN 5412 Roulement à rouleaux cylindriques	DIN 5412 Rodamientos a rodillos cilindricos	DIN 5412 Rodamiento rodillos cilindricos
Schrauben	Screws:	Vis	Vite	Tornillo
DIN 84 Zylinderschraube	DIN 84 Slotted cheese head screw	DIN 84 Vis à tête cylindrique	DIN 84 Vite a testa cilindrica	DIN 84 Tornillo de cabeza cilindrica
DIN 931 Sechskantschraube	DIN 931 Hexagon head bolt with shank	DIN 931 Vis H	DIN 931 Vite a testa esagonale	DIN 931 Tornillo H
DIN 933 Sechskantschraube	DIN 933 Hexagon head screw	DIN 933 Vis H	DIN 933 Vite a testa esagonale	DIN 933 Tornillo H
DIN 938 Stiftschraube	DIN 938 Stud	DIN 938 Goujon	DIN 938 Vite prigioniera	DIN 938 Clavija
DIN 939 Stiftschraube	DIN 939 Stud	DIN 939 Goujon	DIN 939 Vite prigioniera	DIN 939 Clavija
DIN 912 Zylinderschraube	DIN 912 Slotted cheese head screw	DIN 912 Vis à tête cylindrique	DIN 912 Vite a testa cilindrica	DIN 912 Tornillo de cabeza cilindrica
DIN 6912 Zylinderschraube	DIN 6912 Slotted cheese head screw	DIN 6912 Vis à tête cylindrique	DIN 6912 Vite a testa cilindrica	DIN 6912 Tornillo de cabeza cilindrica
DIN 7981 Blechschraube	DIN 7981 Tapping screw	DIN 7981 Vis à tôle	DIN 7981 Vite	DIN 7981 Tornillo

SEW-EURODRIVE GmbH & Co · Ernst-Blickle-Straße 42 · D-76646 Bruchsal · Telefon (0 72 51) 75-0 · Telefax (0 72 51) 75-19 70 · Telex 7 822 391

DT, DFT, DV, DFV, eDT, eDFT, eDV, eDFV
G, GF, GV, GFV

SEW EURODRIVE

Übersetzung EINZELTEILLISTE / (D) Translation: Parts List / (GB) Traduction Coupe-Pièces / (F) Traduzione Lista particolari / (I) Traducción Lista de piezas de repuesto (E)

Drehstrom/-Bremsmotoren
Gleichstrom/-Bremsmotoren

AC Squirrel-Cage Motors
resp. Brake Motors
DC Motors
resp. DC Brake Motors

Mot. triphases - mot. triphases avec frein/Mot. courant continu - mot. courant continu avec frein

Motori elettrici
Motori autofrenanti B
Tipo: DT + GT
Motori corrente continua

Mot. trifasicos - mot. trifasicos con freno
Mot. corriente continua - mot. corriente continua con freno

Lfd. Nr	Benennung	DIN	Sach-Nr	Stück	Description	DIN	Part No.	QTY	Designation	DIN	Reference	Nbre	Denominazione	DIN	N° mag	Qta	Denominacion	DIN	Nº de pedido	Nur DT
51	Handhebel/Gewindestift				Hand lever/release screw				Tige amovible/vis de reglage				Leva a mano/Grano con intaglio				Varilla amovible/Tornillo reg.			
52	Bremslamelle				Brake stationary disc				Segment de freinage				Disco a lamelle				Disco de freno			
53	Lüftenebel				Releasing lever				Levier de deblocage				Leva di sblocco				Palanca de desbloqueo			
54	Spulenkörper kpl.				Brake coil body				Ensemble corps de bobine				Elettromagnete con bobina				Armadura completa de la bobina			
55	Verschlußkappe				Closing piece				Bouchon cuvette				Scodellino				Tapa cubos			
56	Schraube				Screw				Vis				Vite				Clavija			
57	Kegelfeder				Conical coil spring				Ressort conique				Molla conica				Muelle conico			
58	Mutter				Nut				Ecrou				Dado				Tuerca			
59	Spiralspannstift				Dowel pin				Goupille elastique				Spina elastica				Pasador elastico			
60	Schraube				Screw				Vis				Vite				Tornillo			
61	Mutter				Nut				Ecrou				Dado				Tuerca			
62	Sicherungsring				Circlip/Snapring				Circlips				Anello di sicurezza				Arandela elastica			
63	Klebeblech				Nonmagnetic shim				Rondelle de separation				Rosetta distanziale				Arandela de separacion			
64	Federring				Lock washer				Rondelle Grower				Rosetta elastica				Arandela Grower			
65	Druckring				Pressure ring				Anneau de pression				Anello di pressione				Anillo de presion			
66	Abdichtband				Rubber sealing collar				Bande d'etancheite				Fascia elastica				Banda de estanqueidad			
67	Gegenfeder/Stellhülse				Counter spring				Contre ressort				Molla di contrasto				Contra resorte			
68	Belagscheibe				Brake disc				Disque garniture				Disco freno				Disco conguarnicion			
68	Belagträger kpl.				Brake disc complete				Disque compl.				Disco freno completo				Disco conguarnicion completo			
69	Spange/Ringfeder				Clip/Annular spring				Ressort de maintien/Anneau ressort				Fermaglio/Anello di arresto				Muelle de retencion/Anillo resorte			
70	Mitnehmer				Carrier				Moyeu d'entrainement				Mozzo di trascinamento				Movil de arrastre			
71	Paßfeder				Key				Clavette				Linguetta				Chaveta			
72	Zylinderrolle				Roller				Galet cylindrique				Rullo cilindrico				Rodillo cilindrico			
73	Bremsscheibe				Stainless steel shim plate				Rondelle de freinage				Disco metallico				Arandela			
73	Nirosscheibe				Stainless steel shim plate				Rondelle de freinage				Disco metallico				Arandela			
74	Klemmkörperring kpl.				Wedge element ring complete				Cage compl.				Gabbia compl.				Caja completa			
75	Deckscheibe/Dichtringflansch				Cover plate				Disque de recouvrement				Coperchietto				Arandela de recubrimiento			
76	Gewindeeinsatz				Threaded insert				Douille auto-taraudeuse				Filettatura riportata				Casquillo auto-roscado			
77	Schraube				Screw				Vis				Vite				Tornillo			
78	Hinweisschild				Reference plate				Plaque indicatrice				Targhetta				Placa indicadora			
79	Schraube				Screw				Vis				Vite				Tornillo			
90	Fuß				Foot				Patte				Piede				Pata			
91	Mutter				Nut				Ecrou				Dado				Tuerca			
93	Federring				Lock washer				Rondelle Grower				Rosetta elastica				Arandela Grower			
94	Schraube				Screw				Vis				Vite				Tornillo			
95	Dichtring				Sealing ring				Rondelle d'etancheite				Guarnizione				Arandela de estanqueidad			
96	Reduktion				Reducer				Reduction				Riduzione				Reduccion			
97	Dichtring				Sealing ring				Rondelle d'etancheite				Guarnizione				Arandela de estanqueidad			
98	Paßscheibe				Shim				Clinquant				Distanziale di compenso				Arandela de ajuste			
99	Paßscheibe				Shim				Clinquant				Distanziale di compenso				Arandela de ajuste			
100	Mutter				Nut				Ecrou				Dado				Tuerca			
101	Federring				Lock washer				Rondelle Grower				Rosetta elastica				Arandela Grower			
102	Anschlußbezeichnungsplatte				Wiring designation plate				Plaque de raccordement				Piastrina design.				Placa conexion			
102	Bezeichnungsschild				Designation plate				Plaque indicatrice								Placa indicadora			
103	Schraube				Screw				Vis				Vite				Tornillo			
104	Stützscheibe				Spacer				Rondelle d'epaulement				Distanziale				Arandela de apoyo			
105	Stützscheibe/Tellerfeder				Spacer/Cup spring				Rondelle d'epaulement/ Rondelle Belleville				Distanziale/Molla per				Arandela de apoyo/ Arandela belleville			
106	Dichtring				Oil seal				Rondelle d'etancheite				Guarnizione				Arandela de estanqueidad			
107	Spritzscheibe				Oil flinger				Deflecteur				Deflettore				Deflector			
108	Leistungsschild				Nameplate				Plaque signaletique				Targhetta				Placa indicadora			

DT, DFT, DV, DFV, eDT, eDFT, eDV, eDFV
G, GF, GV, GFV

SEW EURODRIV

Übersetzung EINZELTEILLISTE	(D) Translation: Parts List	(GB) Traduction Coupe-Pièces	(F) Traduzione Lista particolari	(I) Traducción Lista de piezas de repuesto	(E)
Drehstrom/-Bremsmotoren Gleichstrom/-Bremsmotoren	AC Squirrel-Cage Motors resp. Brake Motors DC Motors resp. DC Brake Motors	Mot. triphases - mot. triphases avec frein/Mot. courant continu - mot. courant continu avec frein	Motori elettrici Motori autofrenanti B Tipo: DT + GT Motori corrente continua	Mot. trifasicos - mot. trifasicos con freno Mot. corriente continua - mot. corriente continua con fren	

Lfd Nr	Benennung	DIN	Sach-Nr	Stück	Description	DIN	Part No	QTY	Designation	DIN	Reference	Nbre	Denominazione	DIN	N. mag	Q.ta	Denominacion	DIN	Nº de pieza	Nº de
164	Dichtring				Sealing washer				Rondelle d'etanchéite				Guarnizione				Arandela de estanqueidad			
165	Verschlußschraube				Screw plug				Bouchon				Tappo				Tapon			
166	Dichtring				Sealing washer				Rondelle d'etanchéite				Guarnizione				Arandela de estanqueidad			
167	Schraube				Screw				Vis				Vite				Tornillo			
168	Federring				Lock washer				Rondelle Grower				Rosetta elastica				Arandela Grower			
169	Sechskantmutter				Hex. head nut				Ecrou H				Dado esagonale				Tuerca hexagonal			
170	Fremdlüfter kpl.				Forced cooling fan complete				Ventilation forcée compl.				Ventola ausiliare				Ventilation forzada			
171	Kabelbinder				Cable binder				Cotter				Stringicavo				Cotar			
172	Gewindestift				Grub screw				Vis sans tête				Grano con intaglio				Tornillo sin cabeza			
173	Vibrationsdämpfer				Vibration damper				Amortisseur de vibrations				Antivibrante				Amortiguador vibraciones			
174	Federring/Fächerscheibe				Lock washer/				Rondelle Grower/				Rosetta elastica/				Arandela Grower/			
					Serrated lock washer				Rondelle eventail				Rosetta elastica dentellata				Arandela ondulada			
175	Schraube				Screw				Vis				Vite				Tornillo			
176	Strebe				Strut				Jambe de force				Perno				Perno			
177	Schraube				Screw				Vis				Vite				Tornillo			
178	Fächerscheibe				Lock washer				Rondelle eventail				Rosetta elastica dentellata				Arandela ondulada			
179	Klemmenplatte				Terminal board				Plaque à bornes				Basetta con morsetti				Placa de bornas			
180	Lüftermotor				Forced cooling fan				Moteur ventilation				Motorino ventilatore				Motor ventilacion			
181	Schraube				Screw				Vis				Vite				Tornillo			
182	Fächerscheibe				Lock washer				Rondelle eventail				Rosetta elastica dentellata				Arandela ondulada			
183	Mutter				Nut				Ecrou				Dado				Tuerca			
184	Klemmenkasten kpl.				Terminal box complete				Boîte à bornes compl.				Scatola morsettiera				Placa de bornas compl.			
185	Rohrlüfterhaube				Duct fan guard				Capot de ventilation				Cuffia ventilazione forzata				Tapa de ventilacion			
186	Mutter				Nut				Ecrou				Dado				Tuerca			
187	Befestigungsring				Mounting ring				Bague de fixation				Anello di fissaggio				Anillo de fijacion			
188	Schraube				Screw				Vis				Vite				Tornillo			
189	Fächerscheibe				Lock washer				Rondelle eventail				Rosetta elastica dentellata				Arandela ondulada			
190	Filzring				Felt ring				Joint feutre				Anello di feltro				Junta fieltro			
191	Schraube				Screw				Vis				Vite				Tornillo			
192	Leistungsschild				Nameplate				Plaque signaletique				Targhetta				Placa indicadora			
193	Anschlußflansch				Mounting flange				Flasque de raccordement				Flangia d'accoppiamento				Tapa conexion			
194	Schraube				Screw				Vis				Vite				Tornillo			
195	Federring				Lock washer				Rondelle Grower				Rosetta elastica				Arandela Grower			
196	Befestigungswinkel kpl.				Fixing bracket complete				Equerre de fixation				Squadra di fissaggio				Escuadra fijacion			
197	Dichtung				Gasket				Joint				Guarnizione				Junta			
198	Anschlußstück				Adapter piece				Piece de raccordement				Elemento di colleg.				Pieza adaptacion			
200	Filzring				Felt ring				Joint feutre				Anello di feltro				Junta fieltro			
201	Kohlebürste				Carbon brush				Balai-charbon				Spazzola				Escobilla de carbon			
202	Bürstenträger mit Halter				Brush holder complete				Porte-balais				Portaspazzola con supporto				Porta escabillas			
203	Schraube				Screw				Vis				Vite				Tornillo			
204	Scheibe				Washer				Rondelle				Rondella				Arandela			
205	Federring				Lock washer				Rondelle Grower				Rosetta elastica				Arandela Grower			
206	Abdeckung				Cover plate				Fermeture				Anello di copertura				Cinta de cierre			
207	Dichtung				Gasket				Joint				Guarnizione				Junta			
208	Schraube				Screw				Vis				Vite				Tornillo			
209	Federring/Scheibe				Lock washer/Washer				Rondelle Grower/Rondelle				Rosetta elastica/Rondella				Arandela Grower/Arandela			
210	Stützscheibe				Spacer				Rondelle d'épaulement				Distanziale				Arandela de apoyo			
211	Scheibe				Washer				Rondelle				Rondella				Arandela			
212	Flanschhaube				Flanged hood				Capot d'adaptation				Flangia di raccordo				Tapa de adaptacion			
213	Schraube				Screw				Vis				Vite				Tornillo			
214	Federring				Lock washer				Rondelle Grower				Rondella				Arandela Grower			
215	Sicherungsring				Circlip/Snapring				Circlips				Anello di sicurezza				Anillo elastico			

SEW-EURODRIVE GmbH & Co · Ernst-Blickle-Straße 42 · D-76646 Bruchsal · Telefon (0 72 51) 75-0 · Telefax (0 72 51) 75-19 70 · Telex 7 822 391

DT, DFT, DV, DFV, eDT, eDFT, eDV, eDFV
G, GF, GV, GFV

SEW EURODRIVE

Übersetzung EINZELTEILLISTE	(D) Translation: Parts List	(GB) Traduction Coupe-Pièces	(F) Traduzione Lista particolari	(I) Traducción Lista de piezas de repuesto
Drehstrom/-Bremsmotoren Gleichstrom/-Bremsmotoren	AC Squirrel-Cage Motors resp. Brake Motors DC Motors resp. DC Brake Motors	Mot. triphases - mot. triphases avec frein/Mot. courant continu - mot. courant continu avec frein	Motori elettrici Motori autofrenanti B Tipo: DT + GT Motori corrente continua	Mot. trifasicos - mot. trifasicos con freno Mot. corriente continua - mot. corriente continua con freno

Ord Nr	Benennung	DIN	Sach-Nr	Stück	Description	DIN	Part No	QTY	Designation	DIN	Référence	Ndre	Denomi-nazione	DIN	N. mac	Dita	Deno-minación	DIN	Nº de pieza	Nº de ex
286	Bremsspule kpl				Brake coil complete				Bobine de frein complete				Bobina del freno compl.				Bobina de freno completa			
287	Ausgleichsscheibe				Equalising ring				Rondelle d'égalisation				Rosetta di compensazione				Arandela de igualación			
288	Stützscheibe				Spacer				Rondelle d'épaulement				Distanziale				Arandela de apoyo			
289	Sicherungsring				Circlip/Snapring				Circlips				Anello di sicurezza				Arandela elastica			
290	Rückstellfeder				Positioning spring				Ressort de rappel				Molla di richiamo				Muelle de actuación			
291	Spannstift				Dowel pin				Goupille elastique				Coppiglia elastica				Pasador elastico			
292	Steckertell				Socket				Connecteur débrochable				Connettore				Conector desenroscable			
293	Steckblock				Socket block				Connecteur fixe resolver + sondes				Blocco connettore				Conector fijo resolver + sondas			
294	Klemmbrücke				Terminal link				Barette de connexion				Ponticello morsetti				Gancho de conexion			
295	Schraube				Screw				Ecrou				Vite				Tuerca			
296	Zwischenplatte				Adapter plate				Plaque intermédiaire				Basetta intermedia				Placa intermedia			
297	Schraube				Screw				Ecrou				Vite				Tuerca			
298	Dichtring				Rubber seal				Joint d'étanchéité				Guarnizione				Junta estanqueidad			
299	Zwischenring				Spacer bush				Anneau intermédiaire				Anello intermedio				Brida intermedia anillo			
300	Zylinderstift				Parallel pin				Goupille cylindrique				Spina cilindrica				Pasador cilíndrico			
301	Verschlußkappe				Closing cap				Bouchon cuvette				Scodellino				Tapa cubos			
302	Scheibe				Disc				Rondelle				Rosetta di appoggio				Arandela			
303	Winkelstecker kpl				Elbow plug complete				Connecteur mude				Connettore ad angolo compl.				Conector acodado			
304	Deckel				Cover				Couvercle				Calotta				Tapa			
305	Resolver				Resolver				Resolver				Resolver				Resolver			
306	Schraube				Screw				Ecrou				Vite				Tuerca			
307	Scheibe				Disc				Rondelle				Rosetta di appoggio				Arandela			
308	Buchse				Bush				Douille				Boccola				Casquillo			
309	Abdeckkappe				Cover plate				Couvercle resolver				Calotta di copertura				Tapa resolver			
310	Federring				Spring washer				Rondelle Grower				Rosetta elastica				Arandela Grower			
311	Dichtung				Gasket				Joint				Guarnizione				Junta			
400	Motor kpl				Motor complete				Moteur compl.				Motore compl.				Motor compl.			
500	Gehäusedeckel				Housing cover				Couvercle de carter				Coperchio carcassa				Tapa de carter			
501	Schraube				Screw				Vis				Vite				Tornillo			
502	Federring				Lock washer				Rondelle Grower				Rosetta elastica				Arandela Grower			
503	Dichtung				Gasket				Joint				Guarnizione				Junta			
504	Klemmenkasten-Unterteil				Terminal box lower part				Dessous de boîte à bornes				Scatola morsettiera				Fondo de caja bornas			
505	Schutzleiteranschluß				Protective conductor connection				Borne de mise à la terre				Prot. colleg. conduttore				Borna tierra			
505	Erdanschluß				Earth connection				Borne de mise à la terre				Presa di terra				Borna tierra			
506	Schraube				Screw				Vis				Vite				Tornillo			
507	Federring				Lock washer				Rondelle Grower				Rosetta elastica				Arandela Grower			
508	Klemmenkasten-Deckel				Terminal box cover				Couvercle de boîte à bornes				Coperchio scatola morsettiera				Tapa de caja bornas			
509	Dichtung				Gasket				Joint				Guarnizione				Junta			
510	Schraube				Screw				Vis				Vite				Tornillo			
511	Federring				Lock washer				Rondelle Grower				Rosetta elastica				Arandela Grower			
512	Verschlußschraube				Screw plug				Bouchon				Tappo				Tapon			
513	Zwischenplatte				Adapter plate				Plaque intermédiaire				Basetta intermedia				Placa intermedia			
514	Schraube				Screw				Vis				Vite				Tornillo			
515	Federring				Lock washer				Rondelle Grower				Rosetta elastica				Arandela Grower			
516	Schraube				Screw				Vis				Vite				Tornillo			
517	Federring				Lock washer				Rondelle Grower				Rosetta elastica				Arandela Grower			
518	Verschlußschraube				Screw plug				Bouchon				Tappo				Tapon			
519	Verbindungsklemme				Terminal strip				Borne de raccordement				Morsetto				Borna de connexion			
520	Verbindungsklemme				Terminal strip				Borne de raccordement				Morsetto				Borna de connexion			
521	Leitungsdurchführung				Conductor transit fitting				Traversée de câbles				Passaggio conduttore				Pasa cables			
522	Kaltleiter-Temperaturfühler				PTC Thermistor				Sonde termométrique				Termosonde				Sonda termométrica			
550	Bremse kpl.				Brake complete				Frein complet				Freno completo				Freno completo			

SEW-EURODRIVE GmbH & Co · Ernst-Blickle-Straße 42 · D-76646 Bruchsal · Telefon (0 72 51) 75-0 · Telefax (0 72 51) 75-19 70 · Telex 7 822 391

Instructions
for Assembly, Operation and Inspection

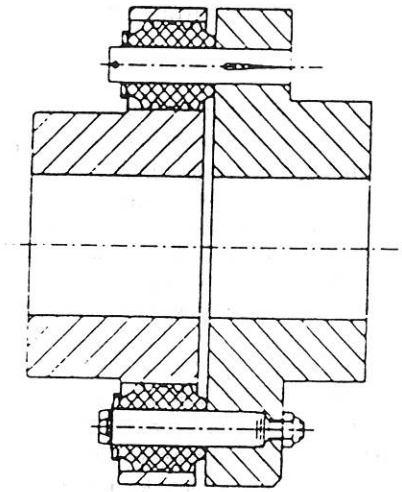

ELCO-Coupling

Type N

Contents

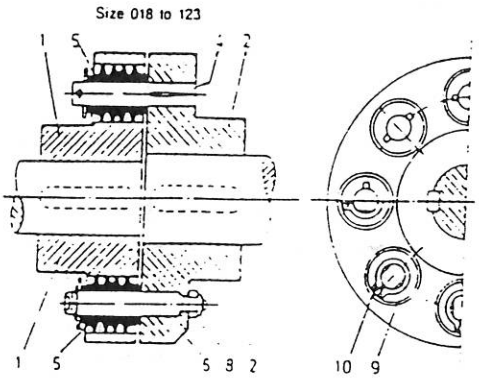

fig 1

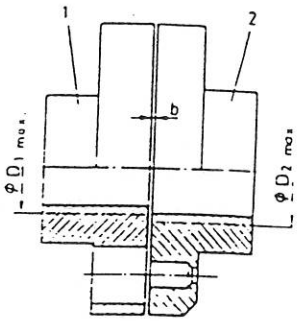

fig 2

3. Dispatching Instructions

Dispatching form

Fully machined ELCO-couplings up to size 341 are delivered assembled. Starting with size 353 the transmitting elements are assembled, the ELCO-coupling halves however are not assembled. ELCO-couplings with rough machined bores are always delivered as piece parts.

With ELCO-couplings sizes 018 up to 129 the transmitting bolts (4) are firmly mounted as grooved studs into the coupling flanges (2). There fore one of the shafts to link both flanges should be lengthwise displaceable.

With ELCO-couplings sizes 149 up to 454 the transmitting bolts (6) are fitted by means of locking nuts (8), so that they are detachable from the coupling half. (Illustration 1). After dismantling the transmitting bolts both shafts can be be displaced in radial direction.
The ELCO-couplings are protected against corrosion. The preservation agent can be removed by using a dissolvent on nitro-basis or naphta.
The dissolvent should not come in touch with the compression sleeves as it could affect their properties.
Sun, ozone and oxygen can also affect the mechanical properties of the compression sleeves.

⚠ Use only air-sealed and impervious to light packing for the storage of the ELCO-compression sleeves (according to DIN 53509 T2 regulations). Ozone and UV-radiation increase the aging process of the compression sleeves considerably.

4. Assembly Instructions

Preparation for Assembly

Both coupling halves of all ELCO-couplings of all sizes can be pulled apart without difficulty.The admissible maximum bore sizes D 1 and D 2 are engraved on the front side of the flange. Reboring is inadmissible.

Assembly

The ELCO-coupling halves, usually designed to correspond to the ISO-fit H7/k6 (m6) and K7/h6 (h8) can be pushed onto the shaft ends with light strokes.
In case the shafts are provided with anti-friction bearings and after removing the sleeves, it is recommended to warm up the ELCO-coupling slightly before mounting it or to use the corresponding mounting device. ELCO-couplings with hydraulic press fit should be pressed on again after they have cooled down to ensure running true.In such a case tighten the pressure screw only after the coupling has cooled down as otherwise the high inner tension could lead to the destruction of the coupling halves.Make sure that the taper keys used have good contact properties so that no radial or / and angular displacements of the coupling occur.
By placing the shafts into the bearing make sure that during operation the clearance value does not exceed the "bmax." value indicated (Illustration 2).

Safeset – Sicherheitskupplung
Safeset – Safety coupling

VOITH

Einbau, Betrieb, Wartung

Installation, Service, Maintenance

J.M.VOITH GmbH
Postfach 1940
D-89509 Heidenheim
Tel. (07321) 37 4337
Fax (07321) 37 7106

VOITH SAFESET AB
Östanbräcksvägen 4
S-82451 Hudiksvall
Tel. (0650) 189 90
Fax (0650) 315 05

Bestell Nr. / Order No.	Kennwort / Codeword	Al-Nr. / WOS No.
2-022494-25-B	VSH T16 (Fox River)	830 673
Typ / Type	**Zeichnungs-Nr. / Drawing No.**	**Kupplungs-Nr. / Coupling No.**
SR-P 160	25.1251.10	5515

Kalibrierdiagramm / Calibration diagram

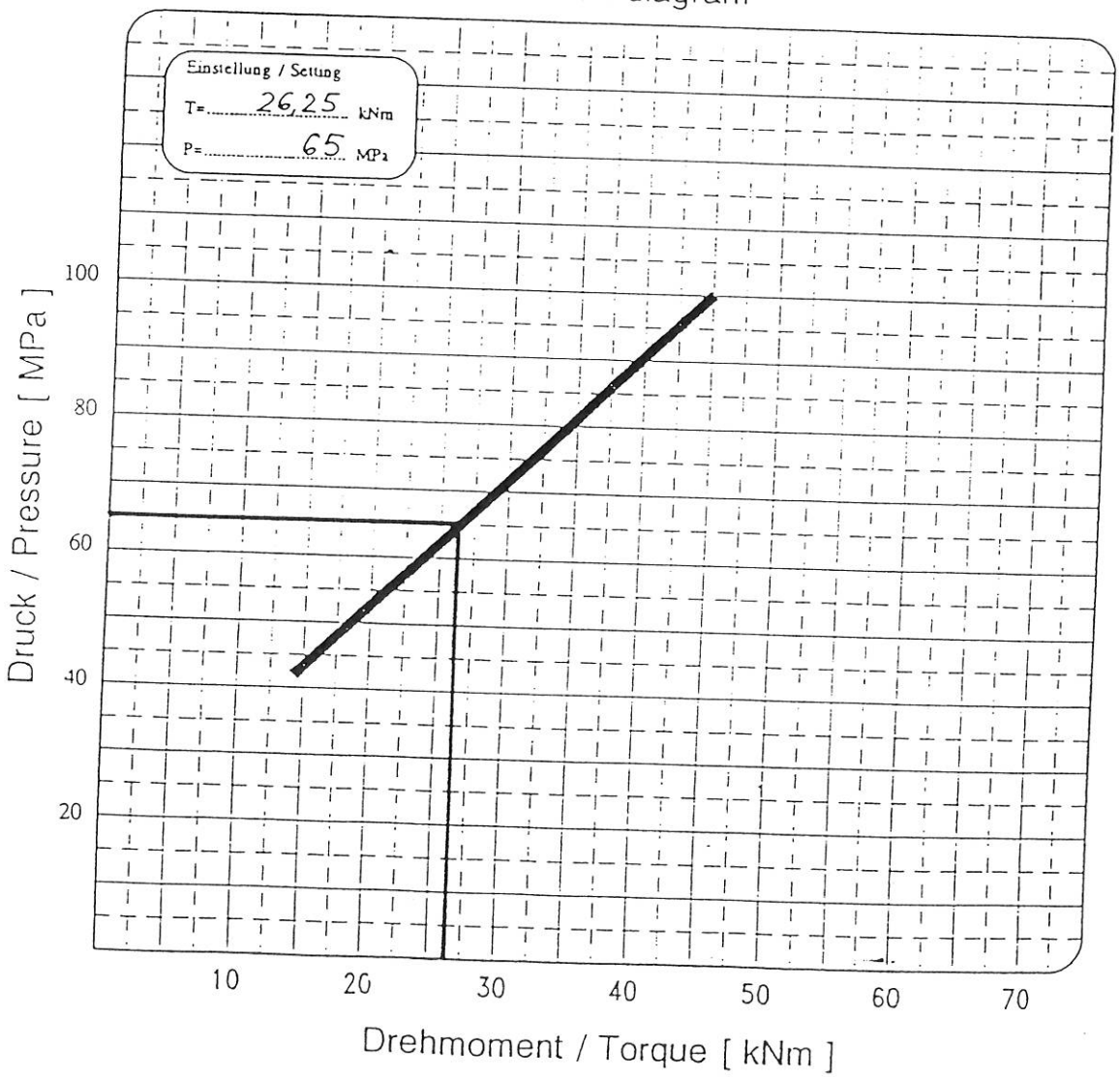

Name: RE Date: 950600

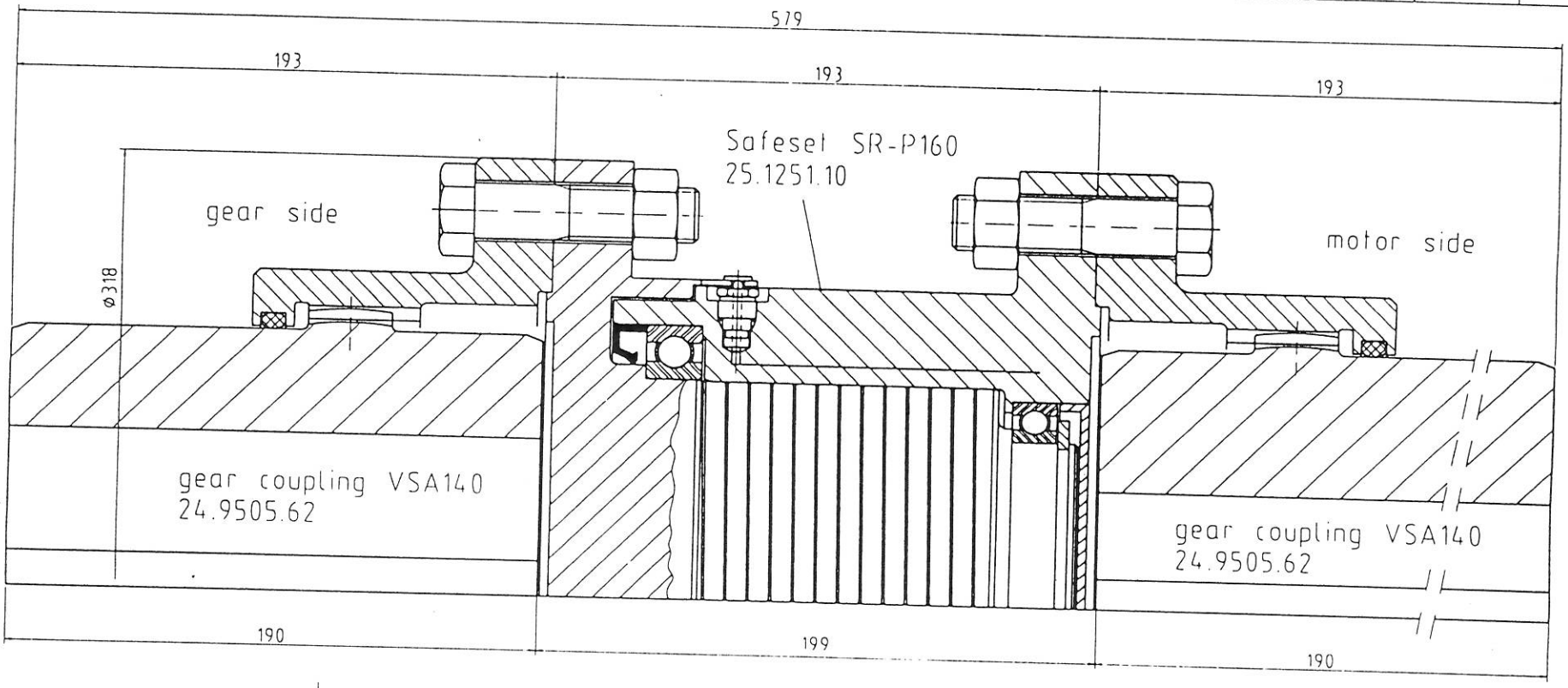

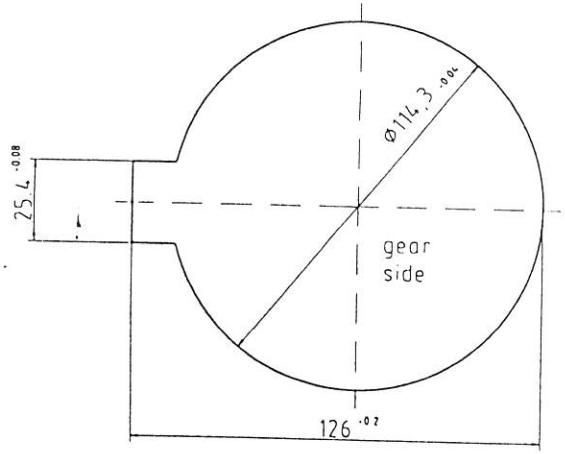

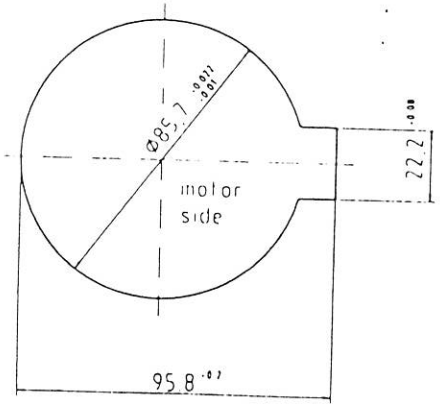

Projekt: Fox River	Maßstab: 1:1	Masse (kg): 170kg	
	Werkstoff:		
gez. 5.12.95 Ctr			
gepr.	Benennung: Safeset / Gear coupling		
Abt. oga			
Norm			
VOITH	Zeichnung Nr.: 25.1504.10		

Operation:

The *Safeset* safety coupling is a torque-limiting coupling with hydraulic slip adjustment. The trip torque can be infinitely varied according to the data in the calibration diagram by changing the hydraulic setting.

When the preset trip torque is exceeded, the *Safeset* coupling slips on the shaft or shaft sleeve causing the head of the shear valve to be cut off by a ring and thus oil pressure to be relieved within a few milliseconds.

Torque transmission stops immediately and the coupling coasts until the plant has come to a standstill.

For resuming service the shear valves are replaced and the coupling pressurized again.

Installation:

(X) The *Safeset* coupling is supplied completely assembled and lubricated ready for installation. Upon installing, check that it can be easily rotated without pressure. Screw out the shear tubes for this purpose.

(...) Install the coupling as shown on the enclosed drawing.

Make sure that friction surfaces and perhaps ball bearings have been oiled with the *Safeset* oil and that the shear ring is firmly connected to the shaft or shaft sleeve.

Upon installing, check that the coupling can be easily rotated without pressure and shear tubes.

Lubrication:

Do <u>not</u> lubricate while coupling is pressurized!

Remove screw plugs from both lubrication holes and turn the coupling until one hole is vertically at the top and the other horizontal.

Fill in oil through the upper hole using the oil injector or any other filling aid until oil escapes from the horizontal hole.

Close both lubricating holes with the screw plugs.

Lubricating interval: at least once per year.

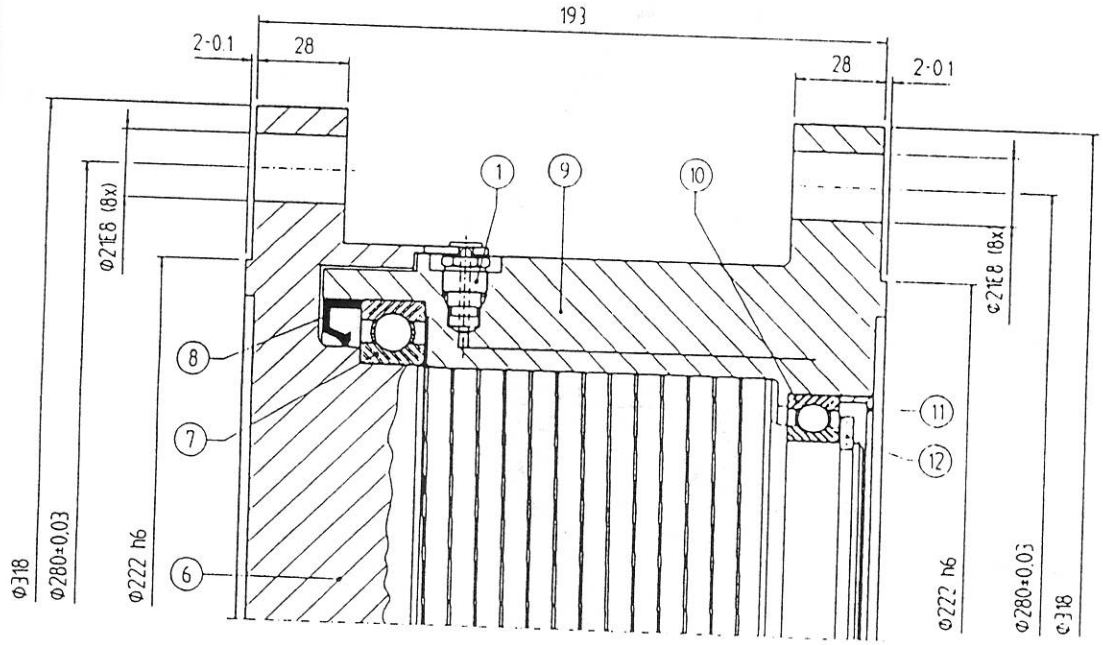

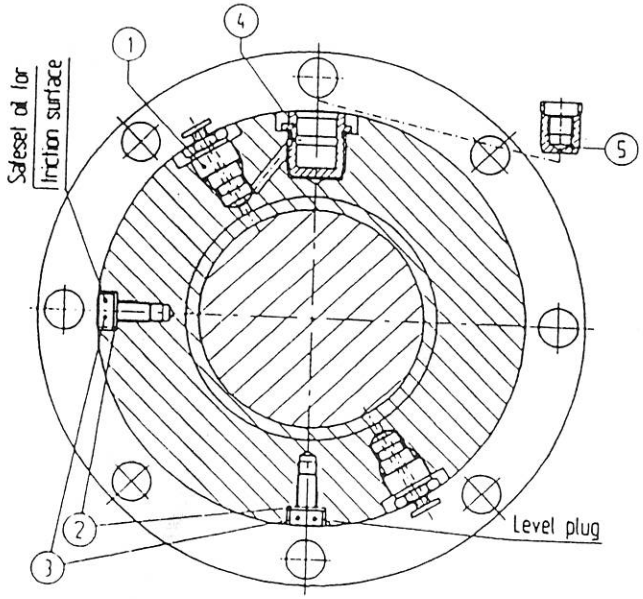

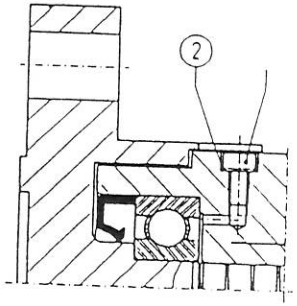

Torque range 20500 - 41000 Nm

12		1	Retaining ring	SgA 120
11	10139	1	Cover	
10	61824 2RS	1	Ballbearing	120x150x16
9	10123	1	Salesel SR-P 160	
8		1	Shaftseal	170x200x12
7	61832	1	Ballbearing	160x200x20
6	10131	1	Flangeshaft + Shearring	
5	8774	1	Protection plug	
4	8612	1	Filling connection	
3	5004	2	Screw	MC6S 6x12low
2	5020	2	Sealwasher	6.7x11x1
1	8020508	2	Shearlube	

Weight: 76kg

C	Item 8 170x200x12 was 170x210x15	950105	PWP
B	Φ21E8 was Φ21 Φ280-0.01 was Φ280	941229	PWP
A	2 shearlubes was 1	931104	RE

93-06-02 RE | 93-06-03PWP

Salesel SR-P 160
Assembly

VOITH

11

10119

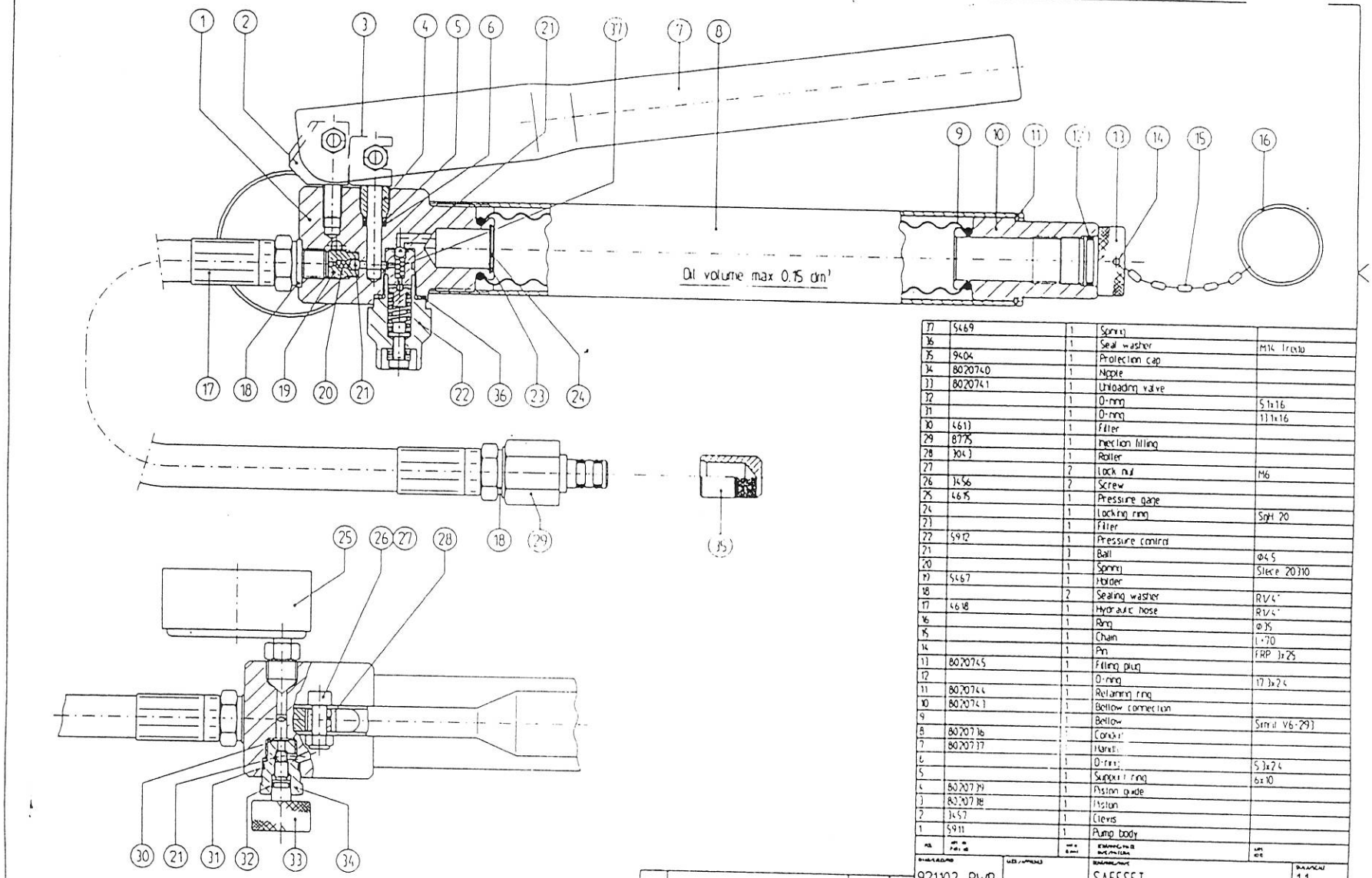

37	5669	1	Spring	
36		1	Seal washer	M14 1x10
35	9404	1	Protection cap	
34	8020740	1	Nipple	
33	8020741	1	Unloading valve	
32		1	O-ring	5 1x16
31		1	O-ring	11 1x16
30	4613	1	Filter	
29	8775	1	Injection filling	
28	3043	1	Roller	
27		2	Lock nut	M6
26	3456	2	Screw	
25	4615	1	Pressure gage	
24		1	Locking ring	SpH 20
23		1	Filter	
22	5912	1	Pressure control	
21		3	Ball	Φ4 5
20		1	Spring	Sleeve 20310
19	5467	1	Holder	
18		2	Sealing washer	R1/4"
17	4618	1	Hydraulic hose	R1/4"
16		1	Ring	Φ35
15		1	Chain	1·70
14		1	Pin	FRP 3x25
13	8020745	1	Filling plug	
12		1	O-ring	17 3x2 4
11	8020744	1	Retaining ring	
10	8020743	1	Bellow connection	
9		1	Bellow	Simil V6-293
8	8020736	1	Handle	
7	8020737	1	Handle	
6		1	O-ring	5 3x2 4
5		1	Support ring	6x10
4	8020739	1	Piston guide	
3	8020738	1	Piston	
2	3457	1	Clevis	
1	5911	1	Pump body	
POS	[illegible]	[illegible]	DRAWING NO / MATERIAL	[illegible]

A	Pos21 3x was2x Pos 36 37 added	940124	RF
[illegible]	[illegible]	[illegible]	[illegible]

921102 PWP

VOITH

SAFESET
Handpump P100B

DRAWING 1:1

9425-2 A

Deaeration

Before being taken into service the pump has to be deaerated.

Hold the pump vertically with the hose upwards.Pump with closed return valve until bubble-free oil escapes.

Pumping

Insert pump connector into connection socket of the coupling up to the stop and pump with return valve closed until the required pressure is reached. After tightening the shear tube open return valve and disconnect pump. Close return valve and fit protective cap to connector.

Refill

Pull out filling screw by the ring at housing end so that the screw can be removed and oil can be filled in. Then close tank again and deaerate pump.

Pressure limitation

The prevent pressurizing the coupling too much set pressure limiting valve on the pump to required coupling pressure plus 5 MPa.

For testing, fit protective brass cap to the connector.

Adjustment is made via total thickness of shims under the adjusting screw. Shim sizes are as follows: 3 x 1 mm, 3 x 0.5 mm, 5 x 0.1 mm.

Pressure	Shim thickness
30 MPa	5,0 mm
40 MPa	4,4 mm
50 MPa	3,8 mm
60 MPa	3,2 mm
70 MPa	2,7 mm
80 MPa	2,2 mm
90 MPa	1,6 mm
100 MPa	1,0 mm
110 MPa	0,4 mm

Voith Transmit GmbH

Alexanderstraße 2
Postfach 1940
D-7920 Heidenheim
Tel. (0 73 21) 37-0
Telex 714 799-33 VH D
Telegramme
Voithtreb Heidenheimbrenz

Zahnkupplungen

Einbau und Wartung

Gear couplings

Assembling and maintenance

Accouplements à dentures

Montage et entretien

Voith-Druck G 1048 4.84

Einbau

1. Alle Teile auf Vollständigkeit und absolute Sauberkeit überprüfen.
2. O-Ringe *a* leicht einfetten und in die O-Ringnuten *j* der Hülsen *b* einsetzen.
3. Hülsen *b* jeweils über die Nabenenden schieben. Dabei die O-Ringe nicht beschädigen.
4. Zahnnaben *c* in der dargestellten Art auf die Wellen aufziehen (d.h. längeres Nabenteil auf Wellenende). Zur Erleichterung des Aufziehens, Naben im Ölbad erwärmen. (Paßfederverbindung: ca. 80° C, Schrumpfverbindung max. 250° C.) O-Ringe vor Erwärmung schützen. Nabenende muß bündig mit Wellenspiegel abschließen.
5. Nabenabstand *g* mit Hilfe eines Innentasters *d* in mehreren Stellungen einstellen. Tabelle 1 enthält die vorgesehenen Werte für Standardnaben.
6. Wellenenden ausrichten. Betriebsbedingte Verlagerungen berücksichtigen. Die Überprüfung sollte mit Lineal oder Meßuhr erfolgen. Die max. zulässige Verlagerung hängt von der Drehzahl ab (Tabelle 3).
7. Zahnnaben *c* und Zahnhülsen *b* gut einfetten.
8. Hülsen jeweils über die Naben schieben.
9. Dichtung *f* einsetzen. Schrauben gleichmäßig anziehen (Tabelle 2, Anzugsmomente).
10. Beide Schmierstopfen *n* (pro Hülse 2 Stück gegenüberliegend) rausschrauben und Schmiermittel nachfüllen, bis es aus der gegenüberliegenden Öffnung austritt. Schmierstopfen einsetzen und anziehen.

Ausbau

1. Flanschschrauben und Dichtung *f* ausbauen.
2. Zahnhülsen *b* von den Naben *c* abziehen.

Wartung sollte jeweils nach ca. 3000 Betriebsstunden erfolgen.

1. Beide Schmierstopfen *n* einer Zahnhülse *b* rausschrauben.
2. Kupplung so drehen, daß die Schmierbohrungen horizontal liegen. Mit Fettpumpe an einer Bohrung so lange Fett nachfüllen, bis sauberes Fett an der gegenüberliegenden Schmierbohrung austritt.
3. Beide Schmierstopfen *n* wieder festschrauben.

Assembling

1. Be sure all parts are clean.
2. Apply a light coat of grease to the O-Rings *a* and insert O-Rings into grooves *j* of sleeves *b*.
3. Place sleeves *b* over shaft ends. Care should be taken not to damage O-Rings *a*.
4. Install hubs *c* on their respective shafts with the longest hub end towards shaft end. Hub faces have to be flush with shaft end.
5. Install units to be connected in place and check the spacing *g* between hubs by means of a gauge *d*. See tabulation 1 for correct hub spacing *g*, for standard types.
6. Align the two shafts, check alignment using a straight edge *e* and a tapered gauge *d*, or better using a comparator.
   Alignment precision depends on running speed (see tab. 3).
7. Coat hub and sleeve gearings with grease.
8. Slide sleeves *b* over hubs *c*.
9. Insert gasket *f* and bolt sleeves together. Tighten bolts uniformly. See above tabulation 2 for correct tightening torque (*t* Nm).
10. Remove both lube plugs *n* of one sleeve *b* and add grease in sufficient amount to overflow with lubricant holes in horizontal position. Re-install the 2 plugs *n*.

Disassembling

1. Remove bolts and gasket *f*.
2. Slide sleeves *b* off hubs *c*.

Maintenance

Every 3000 hours.

1. Remove both plugs *n* of one sleeve *b*.
2. Position lube holes at horizontal position and by means of a grease gun, force grease into one hole until clean grease flows out of the opposite hole.
3. Re-install the plugs *n*.

Montage

1. S'assurer que toutes les pièces soient propres.
2. Enduire légèrement les O-Ring *a* de graisse et les introduire dans les rainures *j* des manchons *b*.
3. Passer les manchons *b* sur les extrémités d'arbres à accoupler. Éviter de blesser les O-Ring *a*.
4. Monter les moyeux *c* sur leurs arbres respectifs avec le côté long du moyeu du côté de l'extrémité des arbres. L'extrémité des moyeux doit correspondre avec l'extrémité des arbres.
5. Positionner les machines à accoupler et vérifier à l'aide de jauges d'épaisseur *d* si l'écartement *g* les moyeux est bien égal à celui mentionné dans le tableau 1, pour les exécutions standard.
6. Aligner les deux arbres, contrôler l'alignement avec une règle *e* et une jauge d'épaisseur *d*, ou mieux avec un comparateur.
   La tolérance d'alignement dépendra de la vitesse de rotation (voir tab. 3).
7. Enduire de graisse les dentures des moyeux et des manchons.
8. Glisser les manchons *b* sur les moyeux *c*.
9. Introduire le joint *f* et boulonner les manchons en serrant les boulons uniformément. Voir le tableau 2 ci-dessus pour le couple de serrage correct (*t* en Nm).
10. Enlever les 2 bouchons *n* d'un seul manchon *b* et ajouter de la graisse par un orifice jusqu'à ce qu'elle s'échappe par l'autre orifice, les 2 orifices étant disposés horizontalement. Revisser les 2 bouchons *n*.

Démontage

1. Dévisser les boulons et enlever le joint *f*.
2. Séparer les manchons *b* des moyeux *c*.

Entretien

A effectuer toutes les 3000 heures.

1. Dévisser 2 bouchons *n* d'un seul manchon *b*.
2. Disposer les orifices horizontalement et au moyen d'une pompe, injecter de la graisse par un orifice jusqu'à ce que la graisse propre s'échappe par l'autre orifice.
3. Revisser les deux bouchons *n*.

Voith Transmit GmbH
Alexanderstr. 2
D-7920 Heidenheim

Zahnkupplung in Flanschausführung
Gear coupling, flanged type

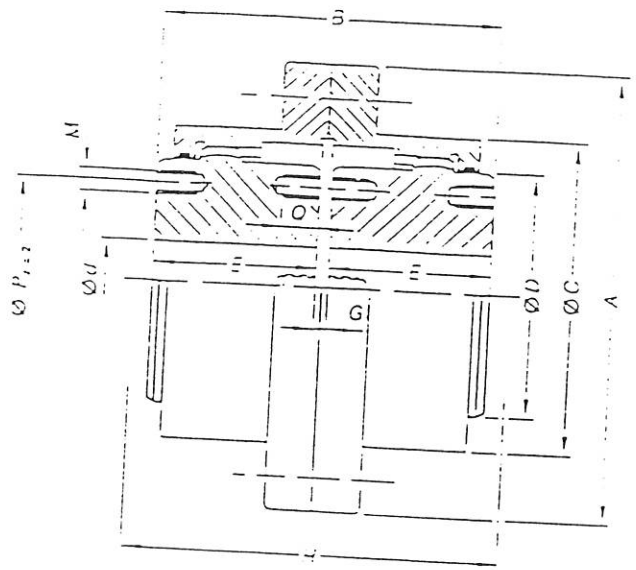

Größe Size	d_{max}	M_N	n_N	β	A	B	C	D	E	G	H	M	P	O
40	40	0.85	5300	1.5	117	89	76	59	40	3	150	M 5	50	9
55	55	1.60	4600	1.5	152	100	96	73	50	3	170	M 6	57	9
70	70	2.90	4200	1.5	178	127	122	93	62	3	210	M 8	84	12
85	85	5.05	3800	1.5	213	157	150	118	76	5	250	M 8	102	12
100	100	8.20	3500	1.5	240	185	174	143	90	5	300	M 10	122	15
120	120	12.5	3250	1.5	280	216	200	165	105	6	350	M 10	144	15
140	140	20.4	2900	1.5	318	246	224	190	120	6	390	M 12	166	18
160	160	28.0	2700	1.5	347	278	252	216	135	8	440	M 12	188	18
180	180	39.0	2500	1.5	390	308	284	242	150	8	490	M 16	212	24
200	200	55.0	2300	0.75	425.5	355	324	270	175	8	555	M 16	234	24
220	220	111	2100	0.75	457	385	355	295	190	8	640	M 16	253	24

* Gewinde nur auf Wunsch
Tapped hole only required

Installed gear coupling size

d_{max} max. Nabenbohrung (mm)
M_N übertragbares Drehmoment (kNm)
n_N max. Drehzahl (min^{-1})
β max. Winkel pro Zahneingriff (°)

d_{max} max. bore diameter (mm)
M_N torque capacity (kNm)
n_N max. speed (min^{-1})
β max. misalignment per gear mesh (°)

Voith Transmit GmbH
Sankt Pöltener Straße 43
D-7920 Heidenheim

FLENDER

Ersatzteilliste (EL)
Spare parts list / Liste de pièces de rechange / Lista de repuestos / Tabella pezzi di ricambio / Lista de peças de substituição
Stückliste (SL)
Parts list / Liste de pièces / Lista de piezas / Lista pezzi / Lista de peças

/ DE/EN **Seite** Page / Pagina 1

SL 167.304.009-003-1.....1

Bei Korrespondenz bitte angeben / Please quote in correspondence / Pour toute correspondance prière d'indiquer / Indiquese en toda correspondencia / Da indicare nella corrispondenza / Gentileza indicar em correspondencia

Bauart Type / Type / Tipo / Tipo / Tipo	Größe Size / Taille / Tamaño / Grandezza / Tamanno	Ist-Übersetzung Exact ratio / Rapport réel / Relación I exacta / Rapporto reale / I-eff.	Hierzu gehört Zeichnungs-Nr. Please refer to DWG No. / Plan correspondant Nº / Véase plano nº / Riferito al disegno nº / Refere-se ao desenho Nº	Datum Date / Date / Fecha / Data / Data
RAK	710,0	0,000	5274378	11.11.93

	Menge No off Nombre Cantidad Quantita Quantidade	Benennung Description Désignation Descripcion Denominazione Denominação	Teil-Nr. Part No Nº de la pièce Nº de la pieza Nº del pezzo Nº de peca	Zeichnungs-Nr. Drawing No Plan nº Nº del plano Disegno Nº Nº de desenho	Waren-Nr. Ident No Réf. interne Numero de almacen Nº di identificazione Nº de mercadoria	Gewicht Weight Poids Peso (kg) Peso Peso
E	1	TEIL 1/2 710 NB385 PART	1	8 5274487		260,0
E	1	TEIL 2 710 SONB PART	2	2 5221007		165,0
E	14	BLZN0710,0/0800 BOLT	3	6 N 5212291	500185	2,5
E	14	PUFFER 710 80 SHORE BUFFER	4	4 T 9001524	390490	1,0
E	14	SCHEIBE 50,0 B DISC	5	D 125	342733	0,3
E	14	RING-SICHER 050X2 CIRCLIP	6	D 471	343250	0,1
E	14	SCHB-END RUP 0630/1700 END PLATE	7	4 N 500601	500602	0,1
E	14	STIFT-ZYLKERB 05,0X020 GROOVED DOWEL PIN	8	D 1473	344519	0,1
E	14	BL-SICHER 25,0X1,5 BERR LOCKING PLATE	9	D 432	342859	0,1
E	14	SCHRB-SKT M24X050 HEXAGON HEAD SCREW	10	D 933	321414	0,3
E	10	SCHRB-SKT M30X080 HEXAGON HEAD SCREW	12	D 933	321673	0,6
E	10	SCHUTZVSCHL TL-4-088 PROTECTIVE COVER	13	A 5740	21202	
E	5	SCHRB-SKT M10X025 HEXAGON HEAD SCREW	14	D 933	321606	0,1
E	8	SCHRB-SKT M16X040 HEXAGON HEAD SCREW	17	D 933	321780	0,1
E	1	LAGER-GEL GE 90 UK-2RS BALL AND SOCKET JOINT	18		389178	2,7
E	1	RING-SICHER 090X3 CIRCLIP	19	D 471	343290	0,1
E	5	BLZN 710/800 BOLT	20	3 N 5213061		0,7
E	1	RING 090,0X140,0X010,0 RING	24	9 5271030		0,6
E	1	WELLE-FLANSCH FLANGED SHAFT	16	7 5274488		15,0

A. FRIEDR. FLENDER AG · D-46393 Bocholt · Telefon (0 28 71) 92-0 · Tx 813 841 · Telefax (0 28 71) 92 25 96

Fortsetzung Seite
Continued page
Suite page
Continua pagina
Segue a pagina
Continuacao pa

FLOWMETER SFET-08-XX (SFET-15XX)

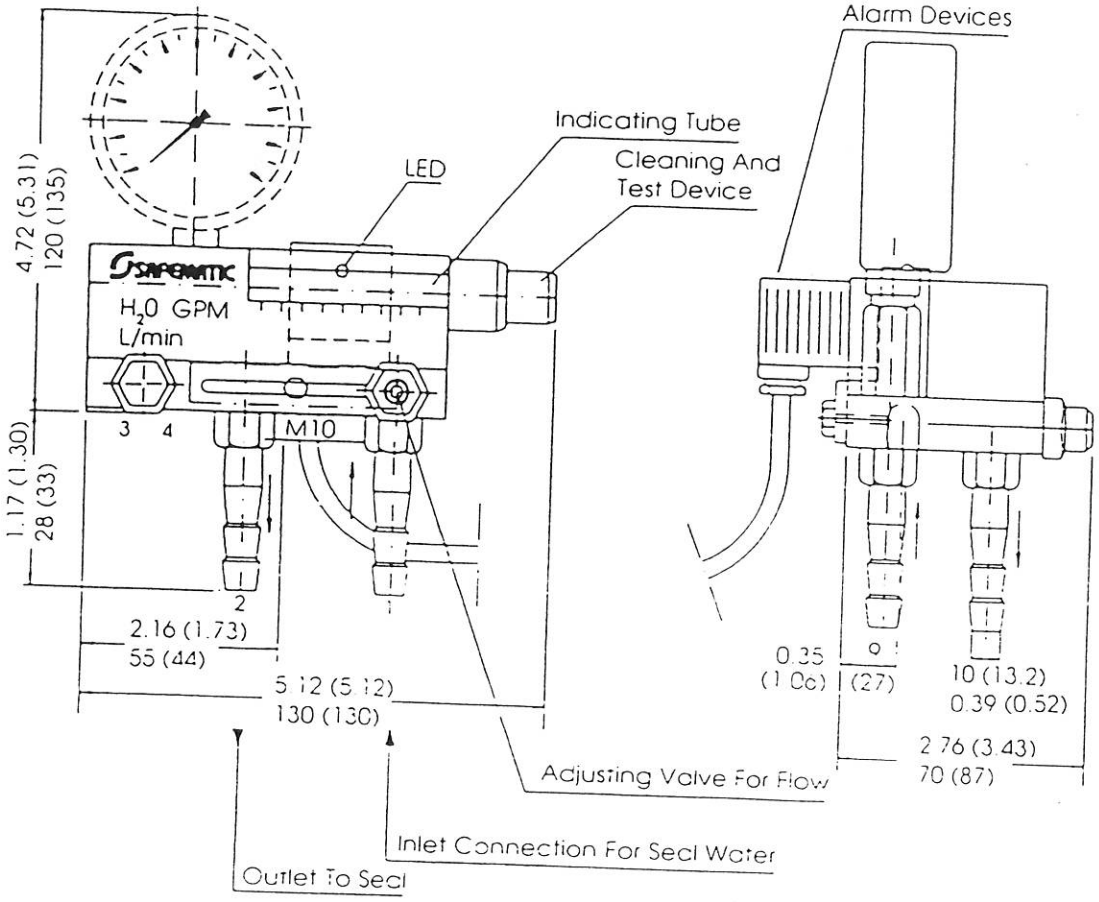

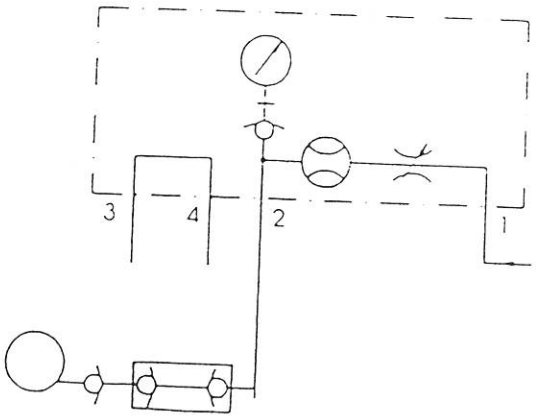

Contents

Rev. Dec. 1992

WIKA

Alexander Wiegand GmbH & Co
D-8763 Klingenberg/Main
Tel. 09372/132-0 Telex 689231
Telefax 09372/132-406

0.0 General

All WIKA pressure transmitters incorporate latest state-of-the-art technology and have been carefully designed and manufactured. Every component undergoes stringent quality control procedures and each instrument is thouroughly tested prior to despatch. This ascertains that all specifications are met, if not surpassed.

Should an instrument be found defective or suspected to be outside specifications despite of the above, than such instruments may be returned, preferably together with a detailed description of the defect. WIKA will repair or replace such instruments within shortest delay.

These instructions for installation and operation have been carefully compiled, however, can not include every conceivable situation or condition on site. WIKA should be pleased to further assist and propose solutions on particular problems in pressure measurement.

0.1 Models with piezoresistive sensors

Models 89x.13.500, 891.13.501, 89x.13.520 and 891.13.530 feature a semiconductor pressure sensor: the specific resistance of which changes when a pressure is applied on the silicon membrane of the sensor. Resistance variation of the sensor is linear proportional to the pressure applied. An integral signal conditioner provides for common standard output signals.

The sensor itself is protected against corrosive attack of the pressure medium by means of a stainless steel diaphragm (Except 891.13.501), whereas an inert filling liquid provides for pressure transmission. The filling liquid is normally silicon oil. Also available is a special liquid approved for oxygen service. Transmitters incorporating a hygienic-type connection are normally filled with vegetable oil.

Internal electronics are fully padded in silicon rubber. Pressure connection and body of the transmitter are made of stainless steel (Except 891.13.501).

0.2 Models with thin film sensors

Models 89x.23.500, 89x.23.510, 89x.23.550 and 891.23. feature a stainless steel diaphragm pressure sensor, the side of which features a thin film quadrupole circuit. The e tronic circuit is directly applied by a special process (sputt ing) on the surface of the diaphragm.

Any pressure applied slightly deforms the diaphragm, w results in a variation of the resistance balance of the thin film cuit. This resistance variation is linear proportional to the p sure applied. An integral signal conditioner provides for c mon standard output signals.

Internal electronics are fully padded in silicon rubber. Pressure connection and body of the transmitter are made of stainless steel.

1.0 Service and maintenance

These WIKA pressure transmitters are maintenance free. components should be replaced and no attempts should made to repair transmitters on site. Defective transmitt should be replaced as a whole and returned to the manufac rer for repair and re-calibration.

Re-adjustments of zero and span are possible to compens for variations due to extended service under varying con tions. WIKA recommends to check performance of transmitt after approximately 1 year of service. Adjustments may made as below:

- Carefully remove the ring nut that retaines the plug, respe tively the Pg-gland. Adjusting potentiometers are found ins the body underneath the plug.
- The left pot provides for zero adjustment.
- The right pot provides for span adjustment.
- Check performance after each adjustment and repeat necessary.
- Re-align plug and fasten ring nut.

Left and right refers to arrangement of the potentiometers the top face of the circuit board. Zero may be checked by simp relieving the transmitter from any pressure. Adjustment of sp requires an appropriate master reference instrument.

WIKA maintains a certified calibration service authorised DKD (Deutscher Kalibrierdienst), the certificates of which a officially recognized by most countries. This service is availab to all pressure instruments, regardless of manufacture.

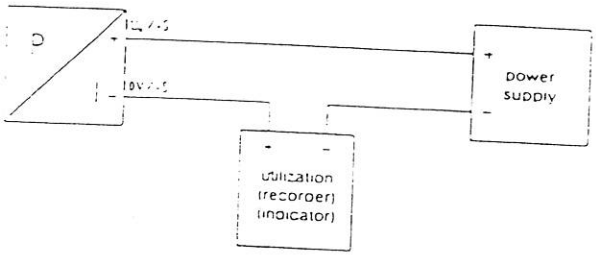

2-wire system

Characteristical feature of a 2-wire system is the serial connection of all components, enabling a „current loop" of 4 ... 20 mA across signal source, power supply and recording instrument.

By incorporating suitable devices, this also enables to indicate or alert physical interruption of the circuit.

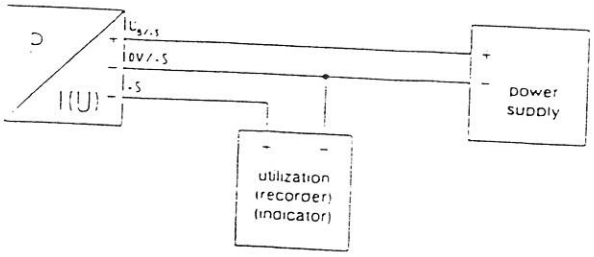

3-wire system

The 3-wire system features separate leads for signal and power transmission, however with a common minus-lead for both.

Signal source and recording instrument are connected in series, however, power supply is parallel, if not totally separated.

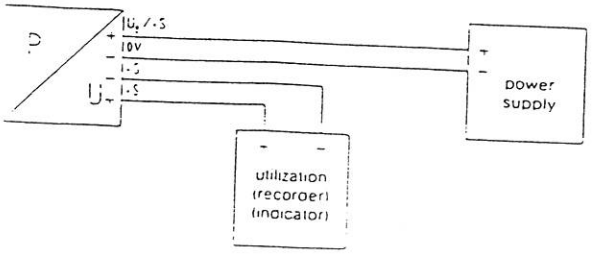

4-wire system

In 4-wire-systems each lead must be kept strictly separate from the others. Particular attention should be paid that the minus-leads are not unintentionally connected by a „hidden" cable screen or ground connection.

The recording instrument to which the signal leads are connected must feature a minimum input impedance of 100 kOhms.

Trouble shooting
Reference table

Defect	Possible reason	Remedy
No signal output	Failure of power supply Wiring interrupted	Check power supply and continuety; replace defective components
	Transmitter wiring crossed	Rectify wiring
	No pressure, pressure duct blocked	Check tailpipes and pressure entry bore
	Transmitter failure through incorrect supply voltage or stray voltage spikes.	Replace transmitter; return defective transmitter
Steady signal despite of pressure variation	Pressure entry blocked	Check tailpipes and pressure entry bore
	Transmitter failure through incorrect supply voltage or stray voltage spikes.	Replace transmitter; return defective transmitter
	Transmitter failure through over-pressurisation	Replace transmitter; return defective transmitter
Steady and too high signal despite of pressure variation	Transmitter failure through incorrect supply voltage or stray voltage spikes	Replace transmitter; return defective transmitter
Full span reading too low	Supply voltage too low	Rectify supply voltage; replace power source
	Load impedance too high	Rectify load or adjust supply voltage; see load equation
	Span adjustment made incorrectly	Re-calibrate transmitter
Zero signal too low	Zero adjustment made incorrectly	Re-calibrate transmitter
Zero signal too high	Zero adjustment made incorrectly	Re-calibrate transmitter
	Transmitter over-pressurised	Replace transmitter; return defective transmitter
Non-linear signal output despite of correct zero adjustment	Transmitter over-pressurised	Replace transmitter; return defective transmitter

SPARE PARTS.

Item No.	Description	Qty on Hand
KNEADER-CPLG-1-3/8X5/16	COUPLING 11210 - 1 3/8 X 5/16	1.00
KNEADER-CPLG-3/4X3/16	COUPLING 2406 - 3/4 X 3/16	1.00
KNEADER-CPLG-SR-P-160	SAFESET COUPLING FOR KNEADER	1.00
KNEADER-FLAT-ROTOR-3x5x23	FLATS-ROTOR-3CM x 5 1/8 x 23 3/16-KNEADER	7.00
KNEADER-FLAT-ROTOR-3x5x24	FLATS-ROTOR-3CM x 5 1/8 x 24 3/8-KNEADER	2.00
KNEADER-FLAT-S-4x7x24-USE	USED-FLATS-STATOR-4 1/2CM x 7 3/8 x 24 3/8 KNEADER	1.00
KNEADER-FLAT-STATR-4x7x21	FLATS-STATOR-4 1/2CM x 7 3/8 x 21-KNEADER	4.00
KNEADER-GEARMOTOR-FA90D18	KNEADER-GEARMOTOR-FA90D180M4TFF	2.00
KNEADER-INSERT-BUNA	INSERT-BUNA-470-KNEADER	1.00
KNEADER-LEVEL-SWITCH	LEVEL SWITCH FOR KNEADER-P/N01801 LS-1800	1.00
KNEADER-LVLSWITCH-GEARBOX	KNEADER-LEVELSWITCH-GEARBOX-OMEGA-LV-51	1.00
KNEADER-OIL-PUMP	GEARBOX OIL PUMP MO95-066329-01	1.00
KNEADER-OIL-SEAL	KNEADER DISCHARGE SCREW MOTOR OIL SEAL	1.00
KNEADER-PLATE-PACK-RAK800	KNEADER PLATE PACK RAK 800/602	1.00
KNEADER-PLUG-SCREW	PLUG SCREW FOR KNEADER-137978-T02065	1.00
KNEADER-RING-7400841	LANTERN RING-7400841-KNEADER	1.00
KNEADER-ROTOR STRIP-A-RH	6221J-ROTOR STRIP-KNEADER-A-RH-201393	2.00
KNEADER-ROTOR STRIP-B-LH	6225J-ROTOR STRIP-KNEADER-B-LH-201396	6.00
KNEADER-ROTOR STRIP-B-RH	6224J-ROTOR STRIP-KNEADER-B-RH-201395	6.00
KNEADER-RTR STRP-A-LH-USE	USED-6222J-ROTOR STRIP-KNEADER-A-LH-7400641	2.00
KNEADER-SLEEVE	KNEADER SLEEVE H3152	1.00
KNEADER-SLEEVE-7400828	SLEEVE-7400828-KNEADER	1.00
KNEADER-STATOR-STP-A-USED	USED -6223J-STATOR STRIP A	11.00
KNEADER-STATOR-STP-B-USED	USED-6226J- STATOR STRIP B	14.00
KNEADER-STATOR-STRIP-A	6223J-STATOR-STRIP-A-201397	8.00
KNEADER-STATOR-STRIP-B	6226J-STATOR-STRIP-201398	10.00
KNEADER-TEMP-CONTROLLER	TEMPERATURE CONTROLLER- STERLCO TYPE 56T	1.00
KNEADER-TEMP-SWITCH	TEMPERATURE SWITCH BARKSDALE T2H-S251-3-A	1.00
REDUCER-KNEADER	KNEADER GEARBOX 6.2:1 2000HP - 1800RPM	1.00
REDUCER-KNEADER-USED	USED KNEADER DISCH SCREW GRBX 32:1	2.00

35782