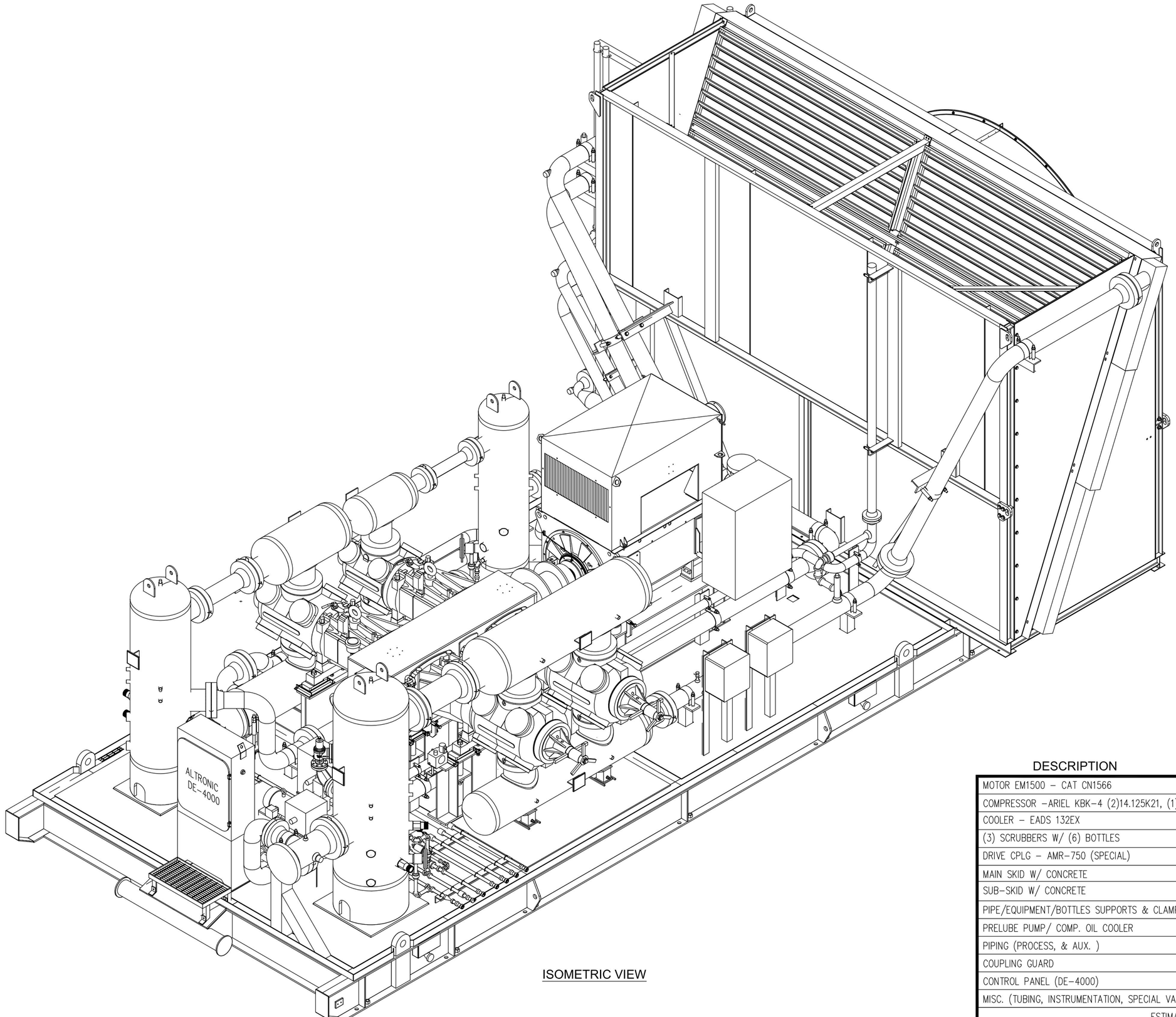


ISOMETRIC VIEW

| DESCRIPTION | QTY | WEIGHT (LBS) |
|---|---|---|
| MOTOR EM1500 – CAT CN1566 | 1 | 9,140 |
| COMPRESSOR –ARIEL KBK–4 (2)14.125K21, (1)11K21, (1)6.75K21 | 1 | 23,049 |
| COOLER – EADS 132EX | 1 | 17,750 |
| (3) SCRUBBERS W/ (6) BOTTLES | – | 15,532 |
| DRIVE CPLG – AMR–750 (SPECIAL) | 1 | 722 |
| MAIN SKID W/ CONCRETE | 1 | 35,175 |
| SUB–SKID W/ CONCRETE | 1 | 10,900 |
| PIPE/EQUIPMENT/BOTTLES SUPPORTS & CLAMPS | – | 2,034 |
| PRELUBE PUMP/ COMP. OIL COOLER | – | 485 |
| PIPING (PROCESS, & AUX. ) | – | 9,687 |
| COUPLING GUARD | 1 | 350 |
| CONTROL PANEL (DE–4000) | 1 | 250 |
| MISC. (TUBING, INSTRUMENTATION, SPECIAL VALVES) | – | 500 |
| ESTIMATED TOTAL ASSEMBLED WEIGHT = 125,574 LBS | | |

REVISION HISTORY

| NO. | DATE | BY | CHK'D | APP'D | DESCRIPTION |
|---|---|---|---|---|---|
| 0 | 01/04/22 | MS | | | ISSUED FOR CONSTRUCTION |
| 1 | 07/20/23 | MS | | | REV. PIPING/ AS BUILT |

JOB NUMBERS:

CERTIFIED PROJECT MANAGER

NAME: _____ DATE: _____

GENERAL ARRANGEMENT - ISOMETRIC VIEW
3 STAGE COMPRESSION PACKAGE
EM1500 / KBK-4 / (2) 14.125K21 x 11K21 x 6.75K21 / 132EX

JOB NO:

DWG. NO: 200-001

SHT 1 OF 1

REV. NO:

DWN BY: MS

SCALE: N.T.S.

CHK'D BY:

APP'D BY:

CUSTOMER:

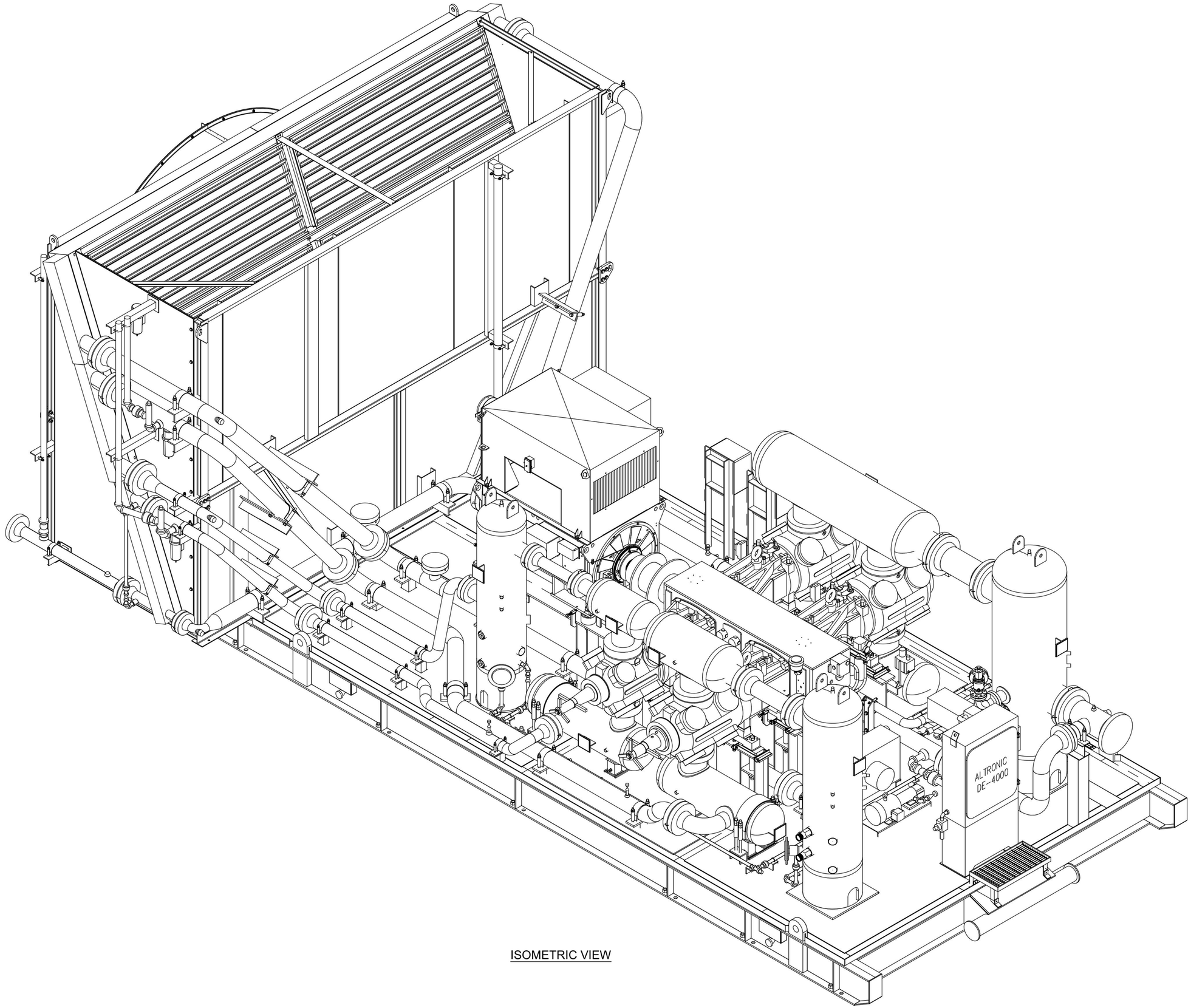


ISOMETRIC VIEW

JOB NUMBERS:

CERTIFIED PROJECT MANAGER

NAME: _____ DATE: _____

REVISION HISTORY

| NO. | DATE | BY | CHK'D | APP'D | DESCRIPTION |
|---|---|---|---|---|---|
| 0 | 01/04/22 | MS | | | ISSUED FOR CONSTRUCTION |
| 1 | 07/20/23 | MS | | | REV. PIPING/ AS BUILT |

GENERAL ARRANGEMENT - ISOMETRIC VIEW
3 STAGE COMPRESSION PACKAGE
EM1500 / KBK-4 / (2) 14.125K21 x 11K21 x 6.75K21 / 132EX

JOB NO:

DWG. NO: 200-002

SHT 1 OF 1

REV. NO: 1

DWN BY: MS

SCALE: N.T.S.

CHK'D BY:

APP'D BY:

CUSTOMER:

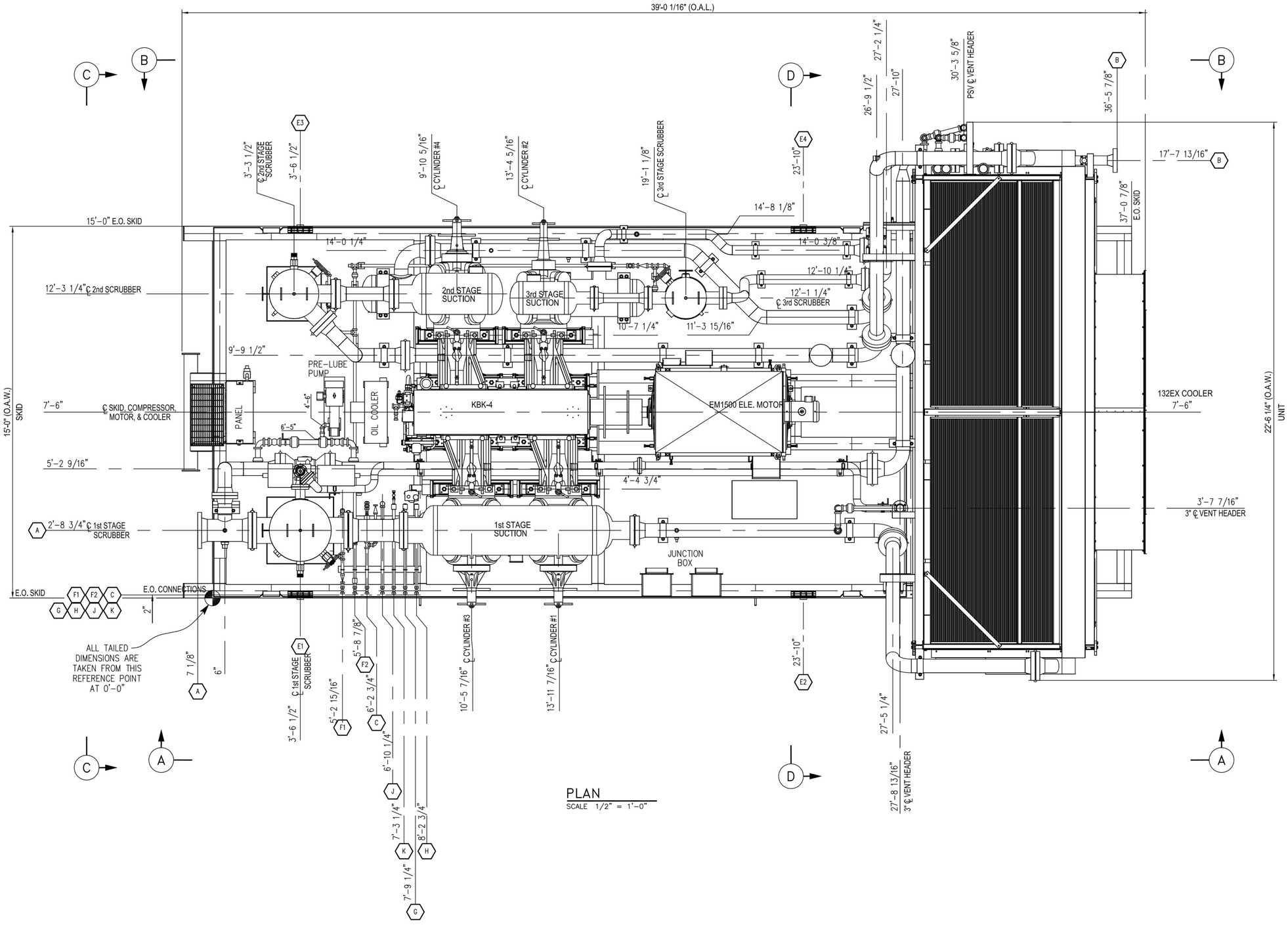


PLAN
SCALE 1/2" = 1'-0"

| MARK | QUAN. | SIZE | RATING | TYPE | SERVICE | MARK | QUAN. | SIZE | RATING | TYPE | SERVICE |
|---|---|---|---|---|---|---|---|---|---|---|---|
| | | | | | | K | ONE | 1" | 2000# | FNPT | COMP. LUBE OIL MAKE-UP |
| E3 E4 | TWO | 2" | 3000# | FNPT | SKID DRAIN | J | ONE | 1" | 2000# | FNPT | COMPRESSOR OIL DRAIN |
| E1 E2 | TWO | 2" | 3000# | FNPT | SKID DRAIN | H | ONE | 1" | 2000# | FNPT | PACKING VENT/ DRAIN |
| C | ONE | 1" | 2000# | FNPT | INSTRUMENT GAS | G | ONE | 1" | 2000# | FNPT | DISTANCE PIECE DRAIN |
| B | ONE | 4" | 900# | RF | UNIT OUTLET | F2 | ONE | 1" | 2000# | FNPT | 2nd & 3rd STG. SCRUBBER DRAIN |
| A | ONE | 10" | 300# | RF | 1st STAGE INLET | F1 | ONE | 1" | 2000# | FNPT | 1st STG. SCRUBBER DRAIN |

CUSTOMER CONNECTION SCHEDULE

JOB NUMBERS

CERTIFIED PROJECT MANAGER
NAME: DATE:

REVISION HISTORY

| NO. | DATE | BY | CHK'D | APP'D | DESCRIPTION |
|---|---|---|---|---|---|
| 0 | 01/04/22 | MS | | | ISSUED FOR CONSTRUCTION |
| 1 | 07/20/23 | MS | | | REV. PIPING/ AS BUILT |

GENERAL ARRANGEMENT - PLAN VIEW
3 STAGE COMPRESSION PACKAGE
EM1500 / KBK-4 / (2) 14.125K21 x 11K21 x 6.75K21 / 132EX

JOB NO:
DWG. NO: 200-003
SHT 1 OF 1
REV. NO: 1
DWN BY: MS
CHK'D BY:
APP'D BY:
SCALE: 1/2" = 1'-0"
CUSTOMER:

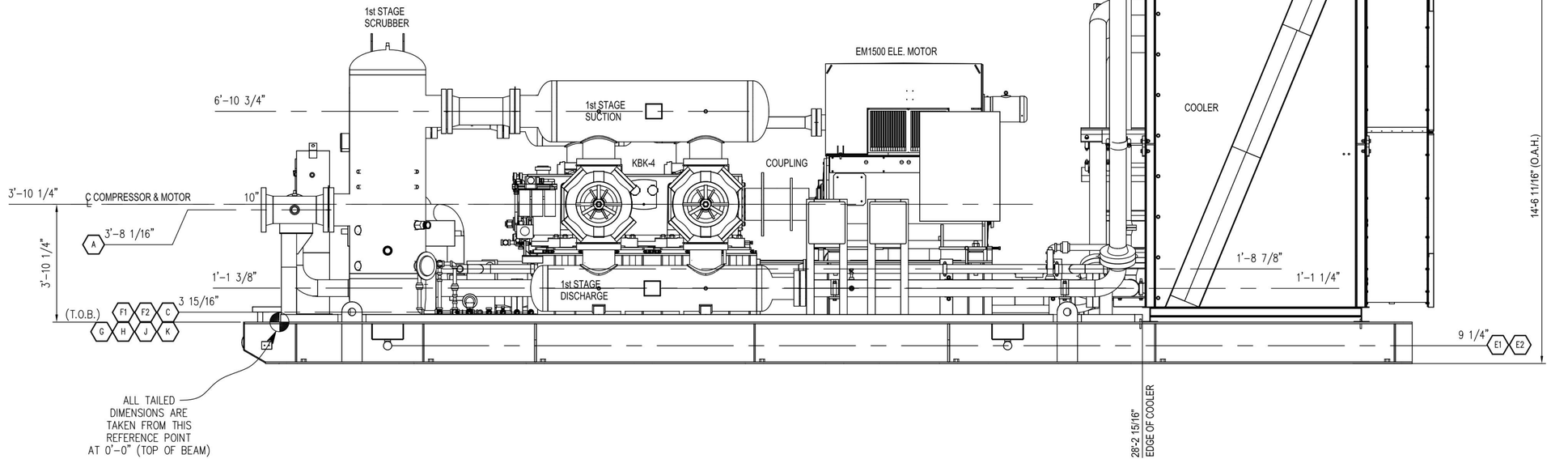


ELEVATION
SCALE 1/2" = 1'-0" (A)

| | | | | | | | | | | | |
|---|---|---|---|---|---|---|---|---|---|---|---|
| | | | | | | K | ONE | 1" | 2000# | FNPT | COMP. LUBE OIL MAKE-UP |
| E3 E4 | TWO | 2" | 3000# | FNPT | SKID DRAIN | J | ONE | 1" | 2000# | FNPT | COMPRESSOR OIL DRAIN |
| E1 E2 | TWO | 2" | 3000# | FNPT | SKID DRAIN | H | ONE | 1" | 2000# | FNPT | PACKING VENT/ DRAIN |
| C | ONE | 1" | 2000# | FNPT | INSTRUMENT GAS | G | ONE | 1" | 2000# | FNPT | DISTANCE PIECE DRAIN |
| B | ONE | 4" | 900# | RF | UNIT OUTLET | F2 | ONE | 1" | 2000# | FNPT | 2nd & 3rd STG. SCRUBBER DRAIN |
| A | ONE | 10" | 300# | RF | 1st STAGE INLET | F1 | ONE | 1" | 2000# | FNPT | 1st STG. SCRUBBER DRAIN |
| MARK | QUAN. | SIZE | RATING | TYPE | SERVICE | MARK | QUAN. | SIZE | RATING | TYPE | SERVICE |

CUSTOMER CONNECTION SCHEDULE

JOB NUMBERS:

CERTIFIED PROJECT MANAGER
NAME: DATE:

REVISION HISTORY

| NO. | DATE | BY | CHK'D | APP'D | DESCRIPTION |
|---|---|---|---|---|---|
| 0 | 01/04/22 | MS | | | ISSUED FOR CONSTRUCTION |
| 1 | 07/20/23 | MS | | | REV. PIPING/ AS BUILT |

GENERAL ARRANGEMENT - ELEVATION "A"
3 STAGE COMPRESSION PACKAGE
EM1500 / KBK-4 / (2) 14.125K21 x 11K21 x 6.75K21 / 132EX

JOB NO:
DWG. NO: 200-004
SHT 1 OF 1
REV. NO:
DWN BY: MS
CHK'D BY:
APP'D BY:
SCALE: 1/2" = 1'-0"
CUSTOMER:

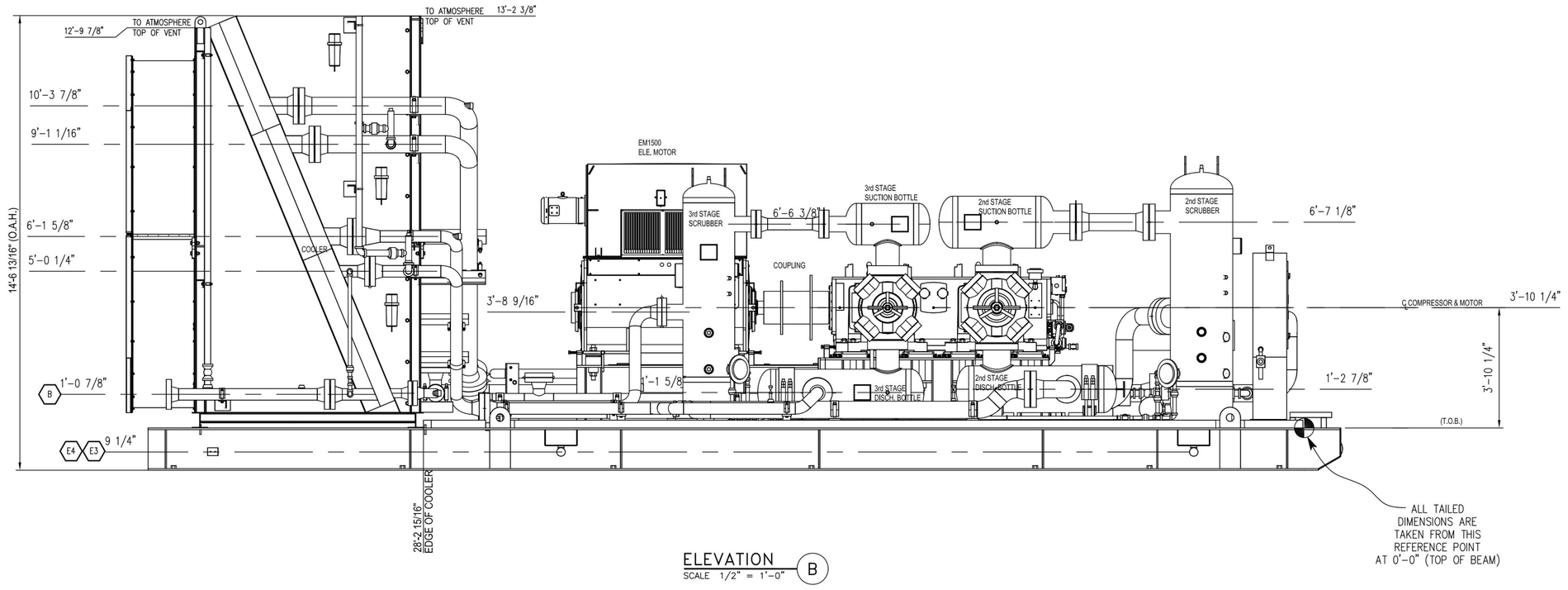


ELEVATION B
SCALE 1/2" = 1'-0"

| MARK | QUAN. | SIZE | RATING | TYPE | SERVICE | MARK | QUAN. | SIZE | RATING | TYPE | SERVICE |
|---|---|---|---|---|---|---|---|---|---|---|---|
| | | | | | | K | ONE | 1" | 2000# | FNPT | COMP. LUBE OIL MAKE-UP |
| E3 E4 | TWO | 2" | 3000# | FNPT | SKID DRAIN | J | ONE | 1" | 2000# | FNPT | COMPRESSOR OIL DRAIN |
| E1 E2 | TWO | 2" | 3000# | FNPT | SKID DRAIN | H | ONE | 1" | 2000# | FNPT | PACKING VENT/ DRAIN |
| C | ONE | 1" | 2000# | FNPT | INSTRUMENT GAS | G | ONE | 1" | 2000# | FNPT | DISTANCE PIECE DRAIN |
| B | ONE | 4" | 900# | RF | UNIT OUTLET | F2 | ONE | 1" | 2000# | FNPT | 2nd & 3rd STG. SCRUBBER DRAIN |
| A | ONE | 10" | 300# | RF | 1st STAGE INLET | F1 | ONE | 1" | 2000# | FNPT | 1st STG. SCRUBBER DRAIN |

CUSTOMER CONNECTION SCHEDULE

REVISION HISTORY

| NO. | DATE | BY | CHK'D | APP'D | DESCRIPTION |
|---|---|---|---|---|---|
| 0 | 01/04/22 | MS | | | ISSUED FOR CONSTRUCTION |
| 1 | 07/20/23 | MS | | | REV. PIPING/ AS BUILT |

JOB NUMBERS:

CERTIFIED PROJECT MANAGER
NAME: DATE:

GENERAL ARRANGEMENT - ELEVATION "B"
3 STAGE COMPRESSION PACKAGE
EM1500 / KBK-4 / (2) 14.125K21 x 11K21 x 6.75K21 / 132EX

JOB NO:
DWG. NO: 200-005
SHT 1 OF 1
REV. NO: 1
SCALE: 1/2" = 1'-0"
APP'D BY:
CHK'D BY:
DWN BY: MS
CUSTOMER:

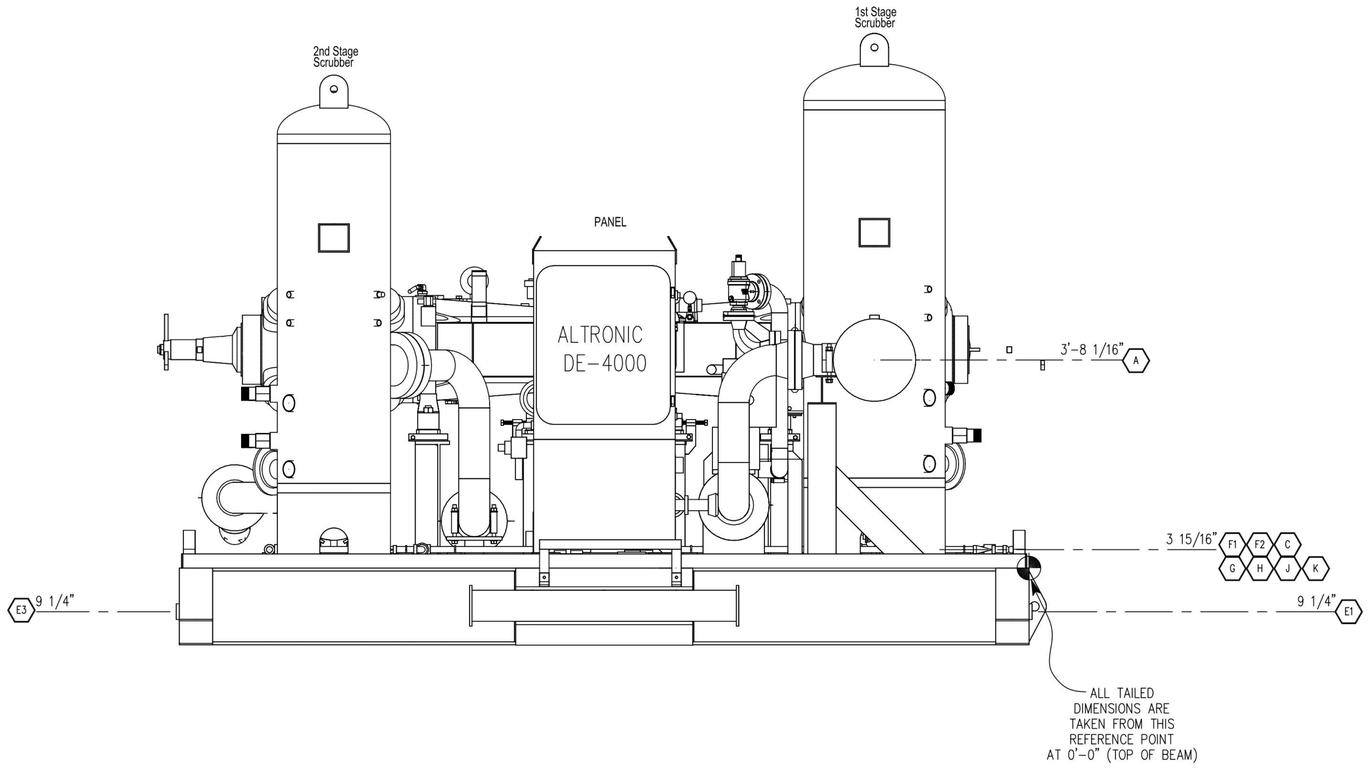


ELEVATION
SCALE 3/4" = 1'-0" C

| | | | | | | | | | | | |
|---|---|---|---|---|---|---|---|---|---|---|---|
| | | | | | | K | ONE | 1" | 2000# | FNPT | COMP. LUBE OIL MAKE-UP |
| E3 E4 | TWO | 2" | 3000# | FNPT | SKID DRAIN | J | ONE | 1" | 2000# | FNPT | COMPRESSOR OIL DRAIN |
| E1 E2 | TWO | 2" | 3000# | FNPT | SKID DRAIN | H | ONE | 1" | 2000# | FNPT | PACKING VENT/ DRAIN |
| C | ONE | 1" | 2000# | FNPT | INSTRUMENT GAS | G | ONE | 1" | 2000# | FNPT | DISTANCE PIECE DRAIN |
| B | ONE | 4" | 900# | RF | UNIT OUTLET | F2 | ONE | 1" | 2000# | FNPT | 2nd & 3rd STG. SCRUBBER DRAIN |
| A | ONE | 10" | 300# | RF | 1st STAGE INLET | F1 | ONE | 1" | 2000# | FNPT | 1st STG. SCRUBBER DRAIN |
| MARK | QUAN. | SIZE | RATING | TYPE | SERVICE | MARK | QUAN. | SIZE | RATING | TYPE | SERVICE |

CUSTOMER CONNECTION SCHEDULE

JOB NUMBERS:

CERTIFIED PROJECT MANAGER
NAME: DATE:

REVISION HISTORY:

| NO. | DATE | BY | CHK'D | APP'D | DESCRIPTION |
|---|---|---|---|---|---|
| 0 | 01/04/22 | MS | | | ISSUED FOR CONSTRUCTION |
| 1 | 07/20/23 | MS | | | REV. PIPING/ AS BUILT |

GENERAL ARRANGEMENT - ELEVATION "C"
3 STAGE COMPRESSION PACKAGE
EM1500 / KBK-4 / (2) 14.125K21 x 11K21 x 6.75K21 / 132EX

JOB NO:
DWG. NO: 200-006
SHT 1 OF 1
REV. NO: 1

DWN BY: MS
CHK'D BY:
APP'D BY:
SCALE: 1/2" = 1'-0"
CUSTOMER:

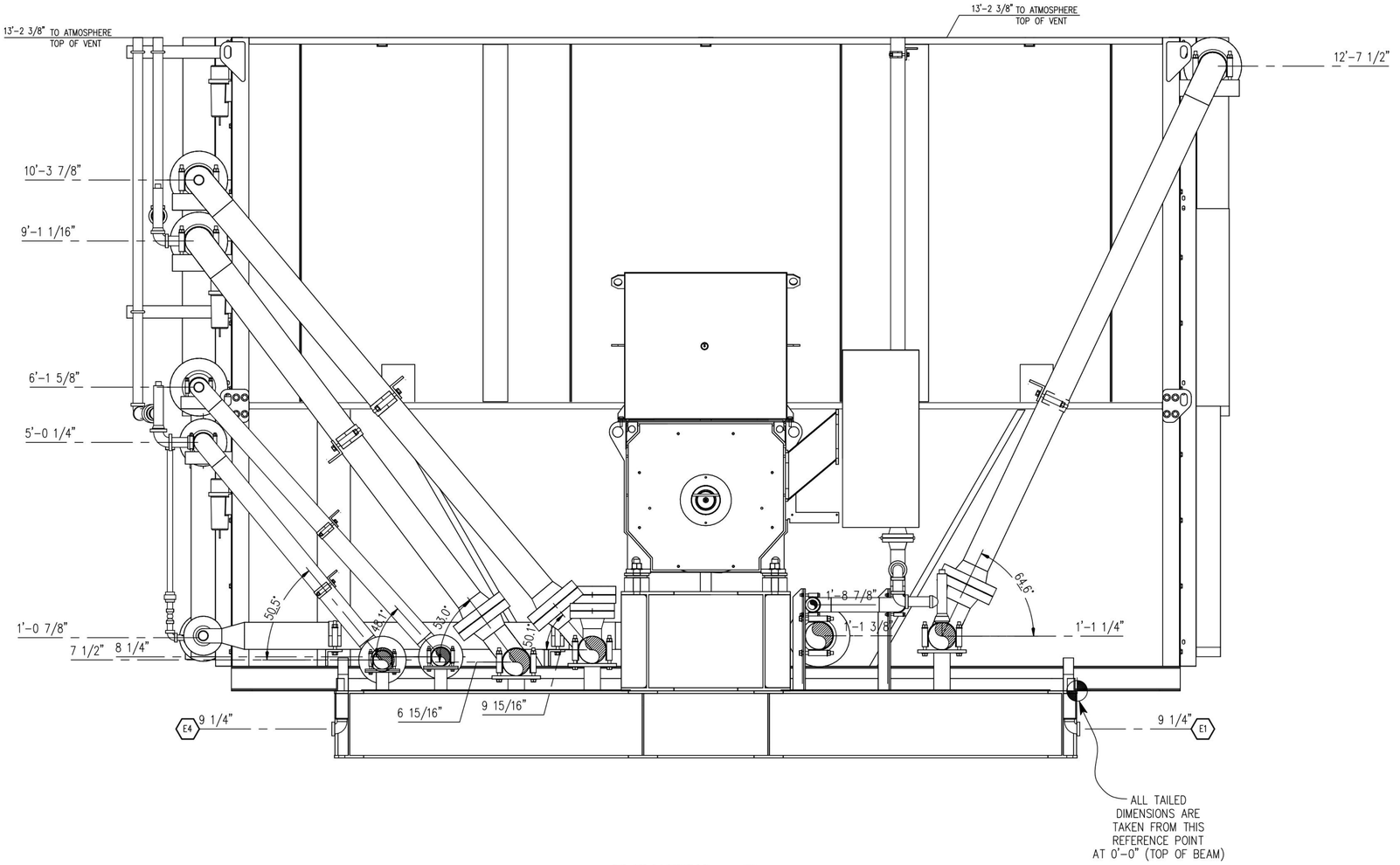


ELEVATION
SCALE 3/4" = 1'-0" (D)

| | | | | | | | | | | | |
|---|---|---|---|---|---|---|---|---|---|---|---|
| | | | | | | K | ONE | 1" | 2000# | FNPT | COMP. LUBE OIL MAKE-UP |
| E3 E4 | TWO | 2" | 3000# | FNPT | SKID DRAIN | J | ONE | 1" | 2000# | FNPT | COMPRESSOR OIL DRAIN |
| E1 E2 | TWO | 2" | 3000# | FNPT | SKID DRAIN | H | ONE | 1" | 2000# | FNPT | PACKING VENT/ DRAIN |
| C | ONE | 1" | 2000# | FNPT | INSTRUMENT GAS | G | ONE | 1" | 2000# | FNPT | DISTANCE PIECE DRAIN |
| B | ONE | 4" | 900# | RF | UNIT OUTLET | F2 | ONE | 1" | 2000# | FNPT | 2nd & 3rd STG. SCRUBBER DRAIN |
| A | ONE | 10" | 300# | RF | 1st STAGE INLET | F1 | ONE | 1" | 2000# | FNPT | 1st STG. SCRUBBER DRAIN |
| MARK | QUAN. | SIZE | RATING | TYPE | SERVICE | MARK | QUAN. | SIZE | RATING | TYPE | SERVICE |

CUSTOMER CONNECTION SCHEDULE

REVISION HISTORY

| NO. | DATE | BY | CHK'D | APP'D | DESCRIPTION |
|---|---|---|---|---|---|
| 0 | 01/04/22 | MS | | | ISSUED FOR CONSTRUCTION |
| 1 | 07/20/23 | MS | | | REV. PIPING/ AS BUILT |

JOB NUMBERS:

CERTIFIED PROJECT MANAGER
NAME: DATE:

GENERAL ARRANGEMENT - ELEVATION "D"
3 STAGE COMPRESSION PACKAGE
EM1500 / KBK-4 / (2) 14.125K21 x 11K21 x 6.75K21 / 132EX

JOB NO:
DWG. NO: 200-007
SHT 1 OF 1
REV. NO: 1
SCALE: 3/4" = 1'-0"
DWN BY: MS
CHK'D BY:
APP'D BY:
CUSTOMER:

DRIVEN END
COMPRESSORS -ARIEL KBK/4

DRIVER END
EM1500 MOTOR

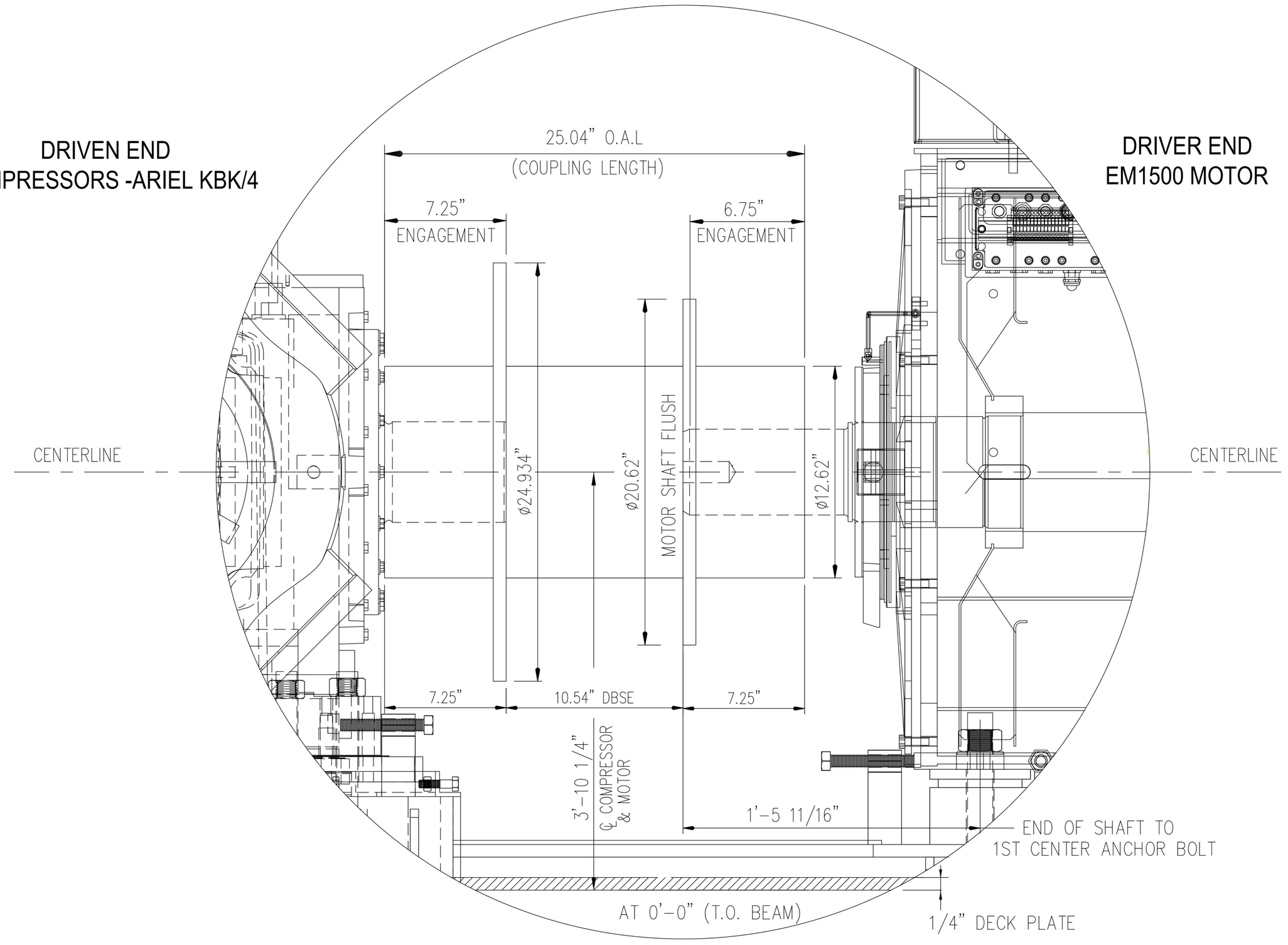


# COMPRESSOR / MOTOR CENTERLINE DIMENSIONS AND COUPLING ENGAGEMENT

JOB NUMBERS:

CERTIFIED PROJECT MANAGER
NAME: _____ DATE: _____

REVISION HISTORY

| NO. | DATE | BY | CHK'D | APP'D | DESCRIPTION |
|---|---|---|---|---|---|
| 0 | 01/04/22 | MS | | | ISSUED FOR CONSTRUCTION |
| 1 | 07/20/23 | MS | | | REV. PIPING/ AS BUILT |

COMP./MOTOR CENTERLINE DIMESIONS & COUPLING ENGAGEMENT
3 STAGE COMPRESSION PACKAGE
EM1500 / KBK-4 / (2) 14.125K21 x 11K21 x 6.75K21 / 132EX

JOB NO:
DWG. NO: 200-008
SHT 1 OF 1
REV. NO: 1

DWN BY: MS
SCALE: NTS
CHK'D BY:
APP'D BY:
CUSTOMER: