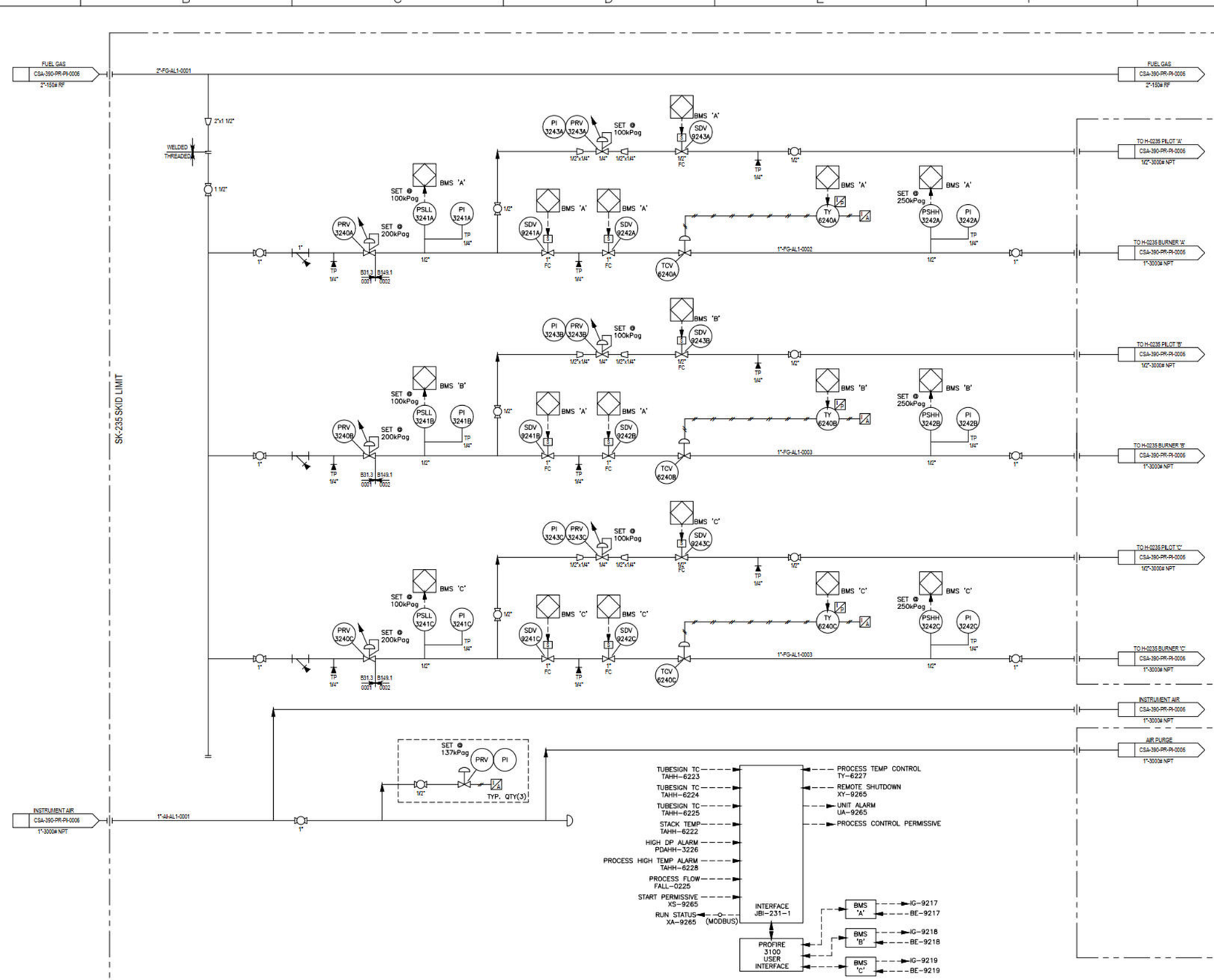

NOTES:

REV.	DATE: YY-MM-DD	BY	CHK'D DFTG	CHK'D ENG	APP'D PM	REVISION
0	20-04-01	DP		JF	EM	ISSUED FOR CONSTRUCTION (TE19GP0001)
1	20-04-03	DP		JF	EM	RE-ISSUED FOR CONSTRUCTION (TE19GP0001)
2	20-04-23	DP		JF	EM	REMOVED VENT LINE, RE-IFC (TE19GP0001)
3	20-05-20	DP		JF	EM	AS-BUILT (TE19GP0001)
4	20-05-26	DP		JF	EM	DELETED VENT NOTES AS-BUILT (TE19GP0001)
5	21-08-09	TH			SM	AS-BUILT

[redacted]

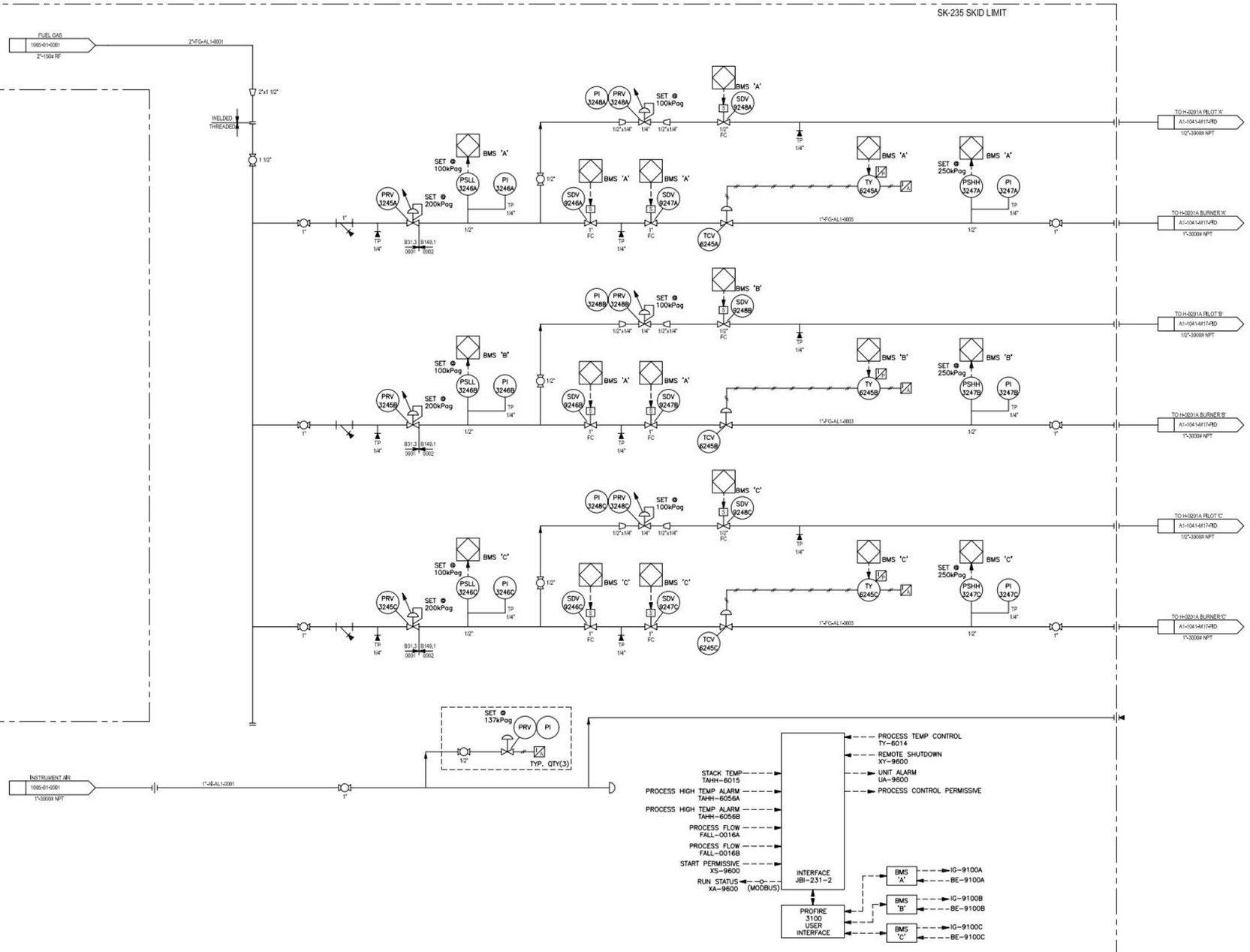

NOTES:

REV.	DATE: YY-MM-DD	BY	CHK'D DFTG	CHK'D ENG	APP'D PM	REVISION
0	20-04-01	DP		JF	EM	ISSUED FOR CONSTRUCTION (TE19GP0001)
1	20-04-03	DP		JF	EM	RE-ISSUED FOR CONSTRUCTION (TE19GP0001)
2	20-04-23	DP		JF	EM	REMOVED VENT LINE, RE-IFC (TE19GP0001)
3	20-05-20	DP		JF	EM	AS-BUILT (TE19GP0001)
4	20-05-26	DP		JF	EM	DELETED VENT NOTES AS-BUILT (TE19GP0001)
5	21-08-09	TH			SM	AS-BUILT
6	23-05-01	TH			SM	AS-BUILT

[redacted]

C:\USERS\HICKU\DESKTOP\BRC CRUDE MAY 2023\1065-01-0002.DWG, 2023-05-02 1:56:57, Todd Hicking

FUEL GAS
CSA-390-PR-PI-0006
2"-CL 150 RF
TP 0001
2"-FG-AL1-0001
2" 1 1/2"
1 1/2"-BF20TTB
1"-BF20TTB
PRV 3250A
SET @ 200 kPag
PSLL 3251A
PG 3251A
BMS 'A'
SET @ 100 kPag
TP 1/4"
1/2"
1"
B31.3 0001
B149.1 0002
1"-FG-AL1-0002
1/2"-BF20TTB
PI 3253A
PRV 3253A
1/2"X1/4"
1/4"
SDV 9251A
SDV 9252A
BMS 'D'
FC
TY 6250A
TCV 6250A
TIC 6250A
PID
SDV 9253A
NOTE 1
PSHH 3252A
PG 3252A
TP 0003
TO-H-201B PILOT 'A'
1/2"-CL 3000 NPT
TP 0004
TO-H-201B BURNER 'A'
1"-CL 3000 NPT
SKID LIMIT
1"-FG-AL1-0003
PRV 3250B
PSLL 3251B
PG 3251B
BMS 'B'
PI 3253B
PRV 3253B
SDV 9251B
SDV 9252B
TY 6250B
TCV 6250B
TIC 6250B
SDV 9253B
PSHH 3252B
PG 3252B
TP 0005
TO-H-201B PILOT 'B'
TP 0006
TO-H-201B BURNER 'B'
1"-FG-AL1-0004
PRV 3250C
PSLL 3251C
PG 3251C
BMS 'C'
PI 3253C
PRV 3253C
SDV 9251C
SDV 9252C
BMS 'F'
TY 6250C
TCV 6250C
TIC 6250C
SDV 9253C
PSHH 3252C
PG 3252C
TP 0007
TO-H-201B PILOT 'C'
TP 8
TO-H-201B BURNER 'C'
INSTRUMENT AIR
CSA-390-PR-PI-0006
1"-CL 3000 NPT
TP 0002
1"-AI-AL1-0005
1/2"-BF20TTB
PRV
PI
TY
(0-137kPag)
TYP QTY(3)
TUBESKIN TC TAHH-6192
TUBESKIN TC TAHH-6193
PROCESS FLOW FALL-0011A
STACK TEMP TAHH-6016
PROCESS HIGH TEMP TAHH-6057A
PROCESS HIGH TEMP ALARM TAHH-6057B
PROCESS FLOW FALL-0011B
START PERMISSIVE XS-9601
RUN STATUS XA-9601 (MODBUS)
INTERFACE JBI-0201B
PROCESS TEMP CONTROL TY-6014B
REMOTE SHUTDOWN XY-9601
UNIT ALARM UA-9601
PROCESS CONTROL PERMISSIVE
PROFIRE 3100 USER INTERFACE
BMS 'A'
BMS 'B'
BMS 'C'
IG-9101A
BE-9101A
IG-9101B
BE-9101B
IG-9101C
BE-9101C

NOTES:
1. THREE 1/2" LOCKING BALL VALVES FOR PILOT TO BE SHIPPED LOOSE WITH THE PACKAGE FOR PLACEMENT CLOSE TO THE HEATER 0201B.

HOLDS:
1. TAG NUMBERS

DWG:C:\Users\hicki\Desktop\BRC Crude May 2023\1191-0000-PR-PI-0001.dwg

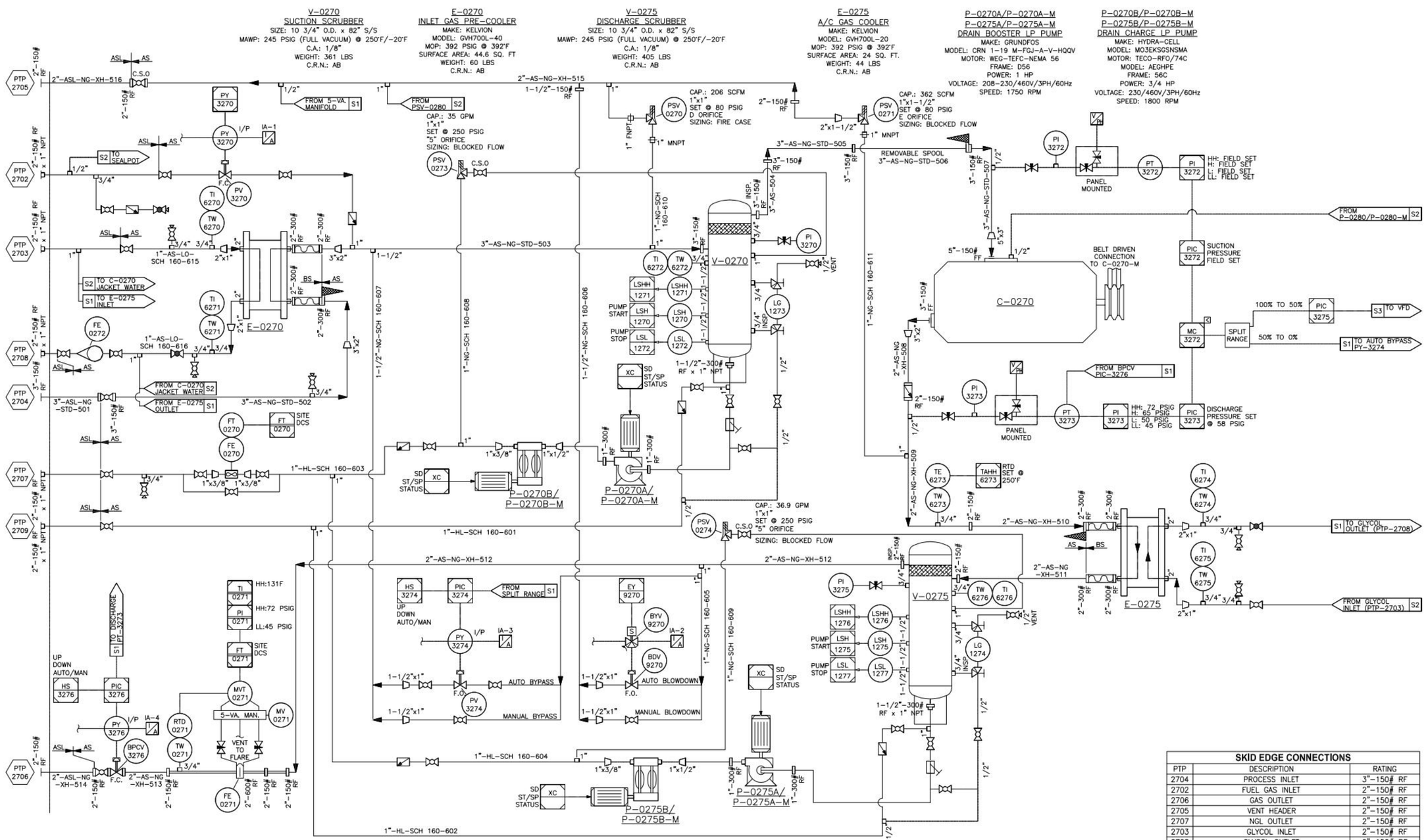

SKID EDGE CONNECTIONS		
PTP	DESCRIPTION	RATING
2704	PROCESS INLET	3"-150# RF
2702	FUEL GAS INLET	2"-150# RF
2706	GAS OUTLET	2"-150# RF
2705	VENT HEADER	2"-150# RF
2707	NGL OUTLET	2"-150# RF
2703	GLYCOL INLET	2"-150# RF
2708	GLYCOL OUTLET	2"-150# RF
2709	MANUAL SCRUBBER DRAIN	2"-150# RF

NOTES:
1. ALL PRESSURE PIPING SYSTEMS WELDED OR THREADED AND TUBING TO COMPLY WITH B31.3 EDITION (2018).
2. REFER TO NEXT STD PIPING SPEC. FOR RADIOGRAPHY REQ'S & MATERIALS.
3. ELECTRICAL CLASSIFICATION: CLASS 1, ZONE 2, GROUP IIA.
4. REFER TO PROJECT SPOOL DRAWINGS FOR WPS AND WELD DETAILS.
5. SPOOL DOWNSTREAM OF STRAINER TO BE PICKLED.

UNIT PLC SIGNAL | SKID MOUNTED DEVICE | PANEL VENT HEADER | OFFSKID SIGNAL TO/FROM DCS/MCC
UNIT PLC MOUNTED | VENT LOCALLY | VENT HEADER | VENT @ EAVE | PANEL AIR

REV.	DATE: YY-MM-DD	BY	CHK'D DFTG	CHK'D ENG	APP'D PM	REVISION
A	20-01-23	LN			CG	ISSUED FOR HAZOP
B	20-02-24	LN			CG	ISSUED FOR APPROVAL
0	20-03-05	LN			CG	ISSUED FOR CONSTRUCTION
1	20-03-31	LN			CG	REVISED BUILDING COLOURS, ADDED TI-0271 HH
2	20-06-29	LN			CG	AS-BUILT
3	20-07-14	LN			CG	FINAL AS-BUILT
4	21-07-29	TH			SM	AS-BUILT
5	23-05-01	TH			SM	AS-BUILT

SEAL:

PERMIT:

[redacted]

C:\USERS\HICKIJ\DESKTOP\BRC CRUDE MAY 2023\CSA-270-PR-PI-0001.DWG, 2023-05-02 3:03:18, Todd Hicking

V-0280
SEALPOT FITTING
SIZE: 6 5/8" O.D. x 34" S/S
MAWP: 215 PSIG @ 350°F
MDMT: -20°F @ 215 PSIG
C.A.: 1/8"
WEIGHT: XX LBS
C.R.N.: AB

TK-0280
FRESH OIL TANK
CAPACITY: 20 US GAL

P-0280
LUBRICATOR
MANUFACTURER: CPI
PUMP MAWP: 3500 PSIG
PROX SWITCH: WHITLOCK DNFT-D-PRX

P-0281
OIL TRANSFER PUMP
MANUFACTURER: WILDEN
MODEL: GPS220/AAAA/XBS/ABN/0677

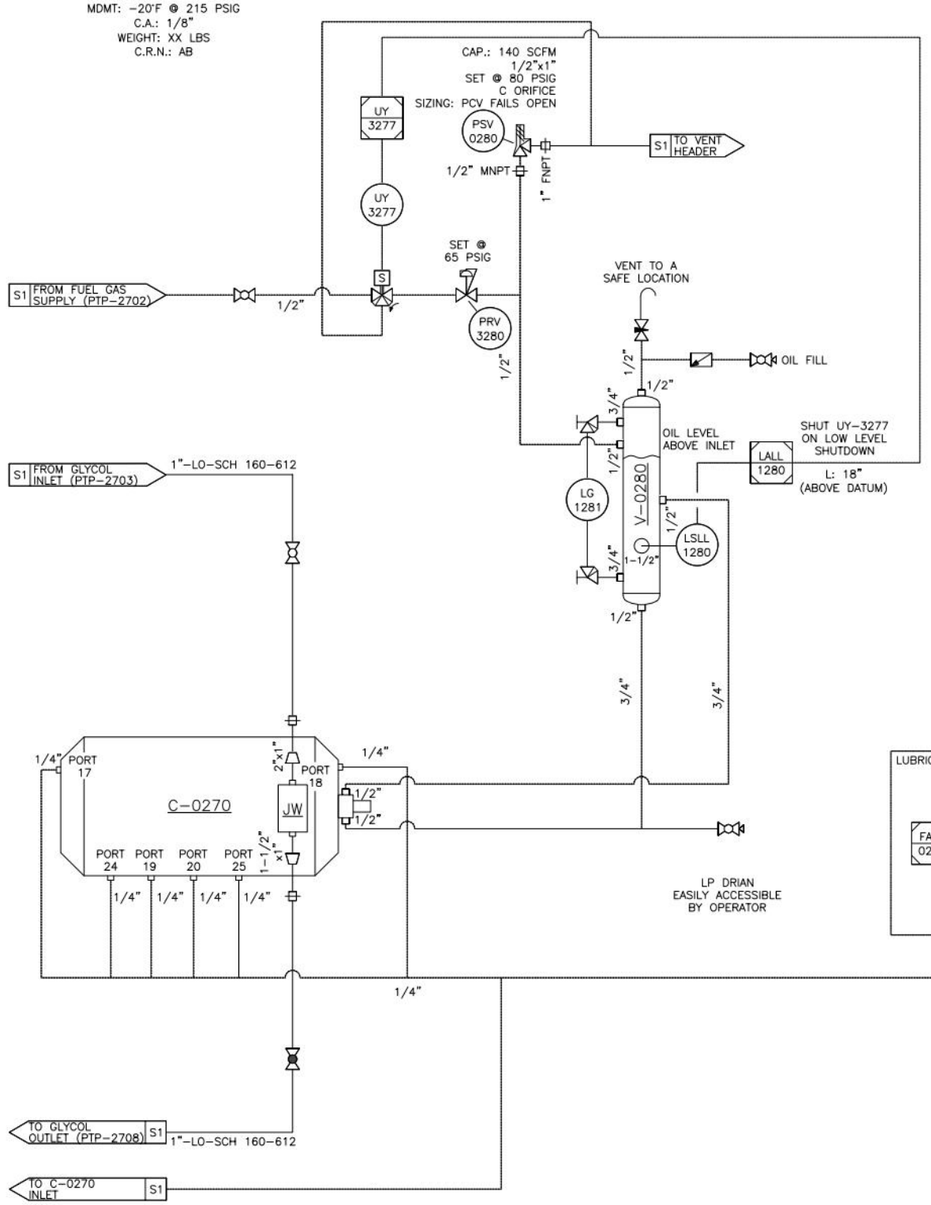

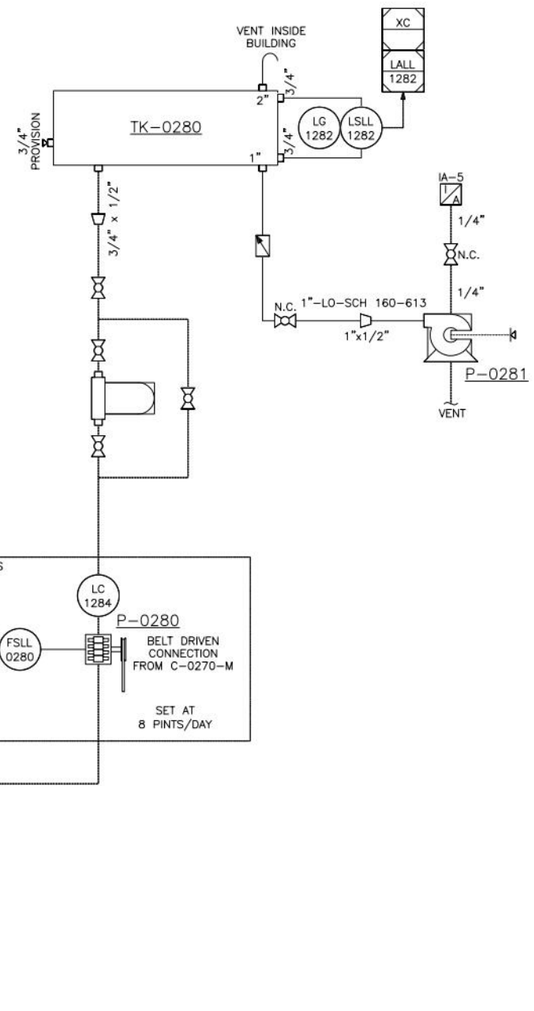

NOTES:
1. ALL PRESSURE PIPING SYSTEMS WELDED OR THREADED AND TUBING TO COMPLY WITH B31.3 EDITION (2018).
2. REFER TO NEXT STD PIPING SPEC. FOR RADIOGRAPHY REQ'S & MATERIALS.
3. ELECTRICAL CLASSIFICATION: CLASS 1, ZONE 2, GROUP IIA.
4. REFER TO PROJECT SPOOL DRAWINGS FOR WPS AND WELD DETAILS.

UNIT PLC SIGNAL | SKID MOUNTED DEVICE | PANEL VENT HEADER (V/PH) | OFFSKID SIGNAL TO/FROM DCS/MCC
UNIT PLC MOUNTED | VENT LOCALLY (V/L) | VENT HEADER (V/H) | VENT @ EAVE (V/E) | PANEL AIR (P/A)

REV.	DATE: YY-MM-DD	BY	CHK'D DFTG	CHK'D ENG	APP'D PM	REVISION
A	20-01-23	LN			CG	ISSUED FOR HAZOP
B	20-02-24	LN			CG	ISSUED FOR APPROVAL
0	20-03-05	LN			CG	ISSUED FOR CONSTRUCTION
1	20-03-31	LN			CG	REVISED BUILDING COLOURS, ADDED TI-0271 HH
2	20-06-29	LN			CG	AS-BUILT
3	20-01-27	LN			CG	FINAL AS-BUILT
4	21-07-29	TH			SM	AS-BUILT
5	23-05-01	TH			SM	AS-BUILT

SEAL:

PERMIT:

[redacted]

C:\USERS\HICKIJ\DESKTOP\BRC CRUDE MAY 2023\CSA-270-PR-PI-0002.DWG, 2023-05-04 12:49:11, Todd Hicking

EF-0270
BUILDING EXHAUST FAN
MAKE: SOPERS
MODEL: KL12XP1PH
FLOW: 1010 CFM
MOTOR: 115V/230V/1PH/60Hz
SPEED: 1800 RPM

BH-0270
BUILDING HEATER
MAKE: HAZLOC
MODEL: XEU1-20-250-480360-A-Y-B T1
TYPE: 20", 1/2 HP, EXP PROOF
NOMINAL KW: 25 KW
VOLTAGE: 480V/3P/60Hz
CLASS I & II, DIV. 1 & 2
WEIGHT: 274 LBS

PNL-C0270
CONTROL PANEL
MANUFACTURER: ALLEN-BRADLEY
MODEL: COMPACT LOGIX
POWER: 24 VDC
CLASS 1, DIV 2
HMI: 10.4"

C-0270
GAS COMPRESSOR
MANUFACTURER: ROFLO
MODEL: 211M
SPEED: 400-1000 RPM
MAWP: 80 PSIG @ 350°F
WEIGHT: 1425 LBS

C-0270-M
DRIVER
MAKE: TECO
MODEL: APH0408-841
VOLTAGE: 460V/3P/60Hz
MOTOR: 40 HP
SPEED RANGE: 400-900 RPM
WEIGHT: XXX LBS

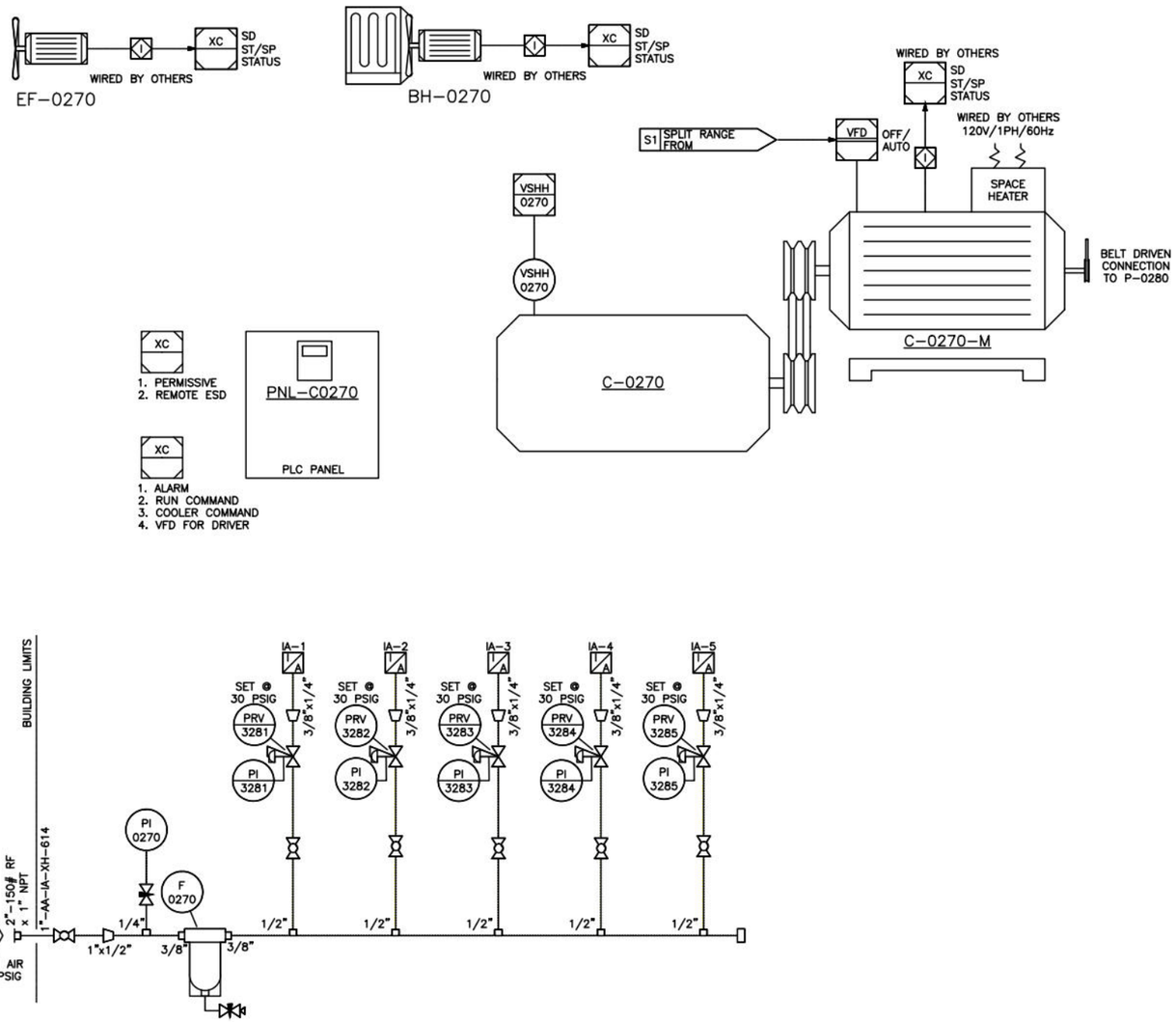

SKID EDGE CONNECTIONS		
PTP	DESCRIPTION	RATING
2701	INSTRUMENT AIR	2"-150# RF

NOTES:
1. ALL PRESSURE PIPING SYSTEMS WELDED OR THREADED AND TUBING TO COMPLY WITH B31.3 EDITION (2018).
2. REFER TO NEXT STD PIPING SPEC. FOR RADIOGRAPHY REQ'S & MATERIALS.
3. ELECTRICAL CLASSIFICATION: CLASS 1, ZONE 2, GROUP IIA.
4. REFER TO PROJECT SPOOL DRAWINGS FOR WPS AND WELD DETAILS.

UNIT PLC SIGNAL | SKID MOUNTED DEVICE | PANEL VENT HEADER (V/PH) | OFFSKID SIGNAL TO/FROM DCS/MCC
UNIT PLC MOUNTED | VENT LOCALLY (V/L) | VENT HEADER (V/H) | VENT @ EAVE (V/E) | PANEL AIR (P/A)

REV.	DATE: YY-MM-DD	BY	CHK'D DFTG	CHK'D ENG	APP'D PM	REVISION
A	20-01-23	LN			CG	ISSUED FOR HAZOP
B	20-02-24	LN			CG	ISSUED FOR APPROVAL
0	20-03-05	LN			CG	ISSUED FOR CONSTRUCTION
1	20-03-31	LN			CG	REVISED BUILDING COLOURS, ADDED TI-0271 HH
2	20-06-29	LN			CG	AS-BUILT
3	20-01-27	LN			CG	FINAL AS-BUILT
4	21-07-29	TH			SM	AS-BUILT

SEAL:

PERMIT:

[redacted]

\\RAM.LOCAL\SHARE\IDM_HOME\HICKIJ\DRAWINGS\OTHER FIELDS\BRC\FRAC FACILITY\CRUDE FRAC AS-BUILTS JULY 2021\CSA-270-PR-PI-0003.DWG, 2021-08-16 9:26:39, Todd Hicking

BH–0270
BUILDING HEATER
BY COMPRESSOR VENDOR

EF–0270
EXHAUST FAN
BY COMPRESSOR VENDOR

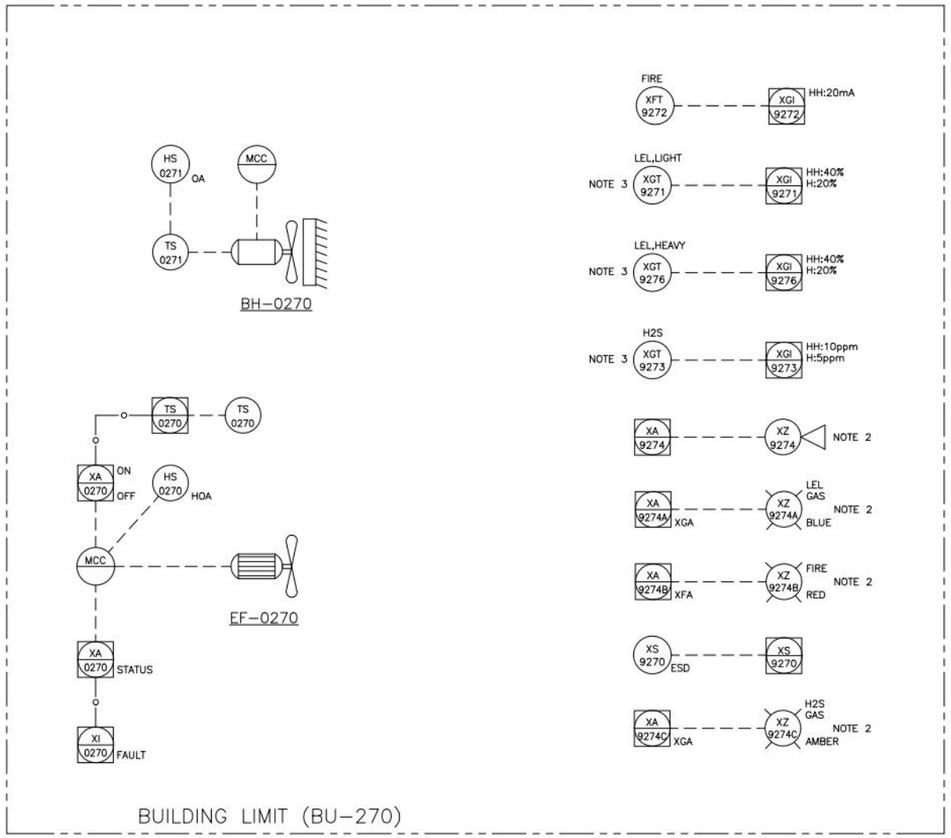

VRU COMPRESSOR BUILDING (PK–270)

NOTES:
1. ALL SHOWN INSTRUMENTS TO BE INSTALLED INSIDE BUILDING BESIDES THAT REQUIRED IN NOTES 2 AND 3.
2. TO BE LOCATED OUTSIDE BUILDING.
3. LEL AND H2S TRANSMITTER/DISPLAYS SHALL BE LOCATED OUTSIDE BUILDING.

REV.	DATE: YY–MM–DD	BY	CHK'D DFTG	CHK'D ENG	APP'D PM	REVISION
0	20–06–03	JC			JC	ISSUED FOR CONSTRUCTION (TW19GP0001)
1	21–07–29	TH			SM	AS–BUILT

SEAL:

PERMIT:

E-0220

FEED/ KEROSENE EXCHANGER

SIZE: 273 mm OD x 5604 mm TS/S
TYPE: TEMA BEU CLASS 'R'
DESIGN (TS): 1034 kPag @ 130°C/-40°C
(SS): 2276 kPag @ 232 °C/-40°C
C.A. (TS/SS): 3.2 mm/3.2 mm
DUTY: 155 kW
TRIM (TS/SS): AO3-39901T/BL3-39901S

NOTES:
1. VALVE STEM TO BE ORIENTED HORIZONTALLY.
2. PIPING IS PROTECTED FROM OVERPRESSURE BY SYSTEM DESIGN (OPPSD). REFER TO CSA-000-PI-CC-0002 FOR CALCULATIONS.
3. TIC-6215B WILL BE PRIMARY ACTIVE CONTROLLER. IN THE EVENT THAT DESALTER IS ADDED IN THE FUTURE, TIC-6215A MAY BE ACTIVATED USING HAND SWITCH TO CONTROL OPTIMAL DESALTER OPERATING TEMPERATURE.

HOLDS:

SK-231 SKID LIMIT

INSTRUMENT AIR TO VRU
CSA-390-PR-PI-0015

INSTRUMENT AIR
CSA-800-PR-PI-0003

2"-IA-AL1-39201-N

QTY: 13
PCV
1/4"BR15T3

2"x1"
1"BR15T3

8"-FL-AO3-39501-N
LP FLARE
CSA-390-PR-PI-0002

FIRE
2H3 2276
PSV 3021
CAP.: 5313 SCFM

4"x3"
4"BF01R3 CSO

2"x2"
3"GA03R3 CSO NOTE 1

25H N BL3 AO3
1"GL08T3

TUBE RUPTURE
1.5Q3 1035
PSV 0226
NOTE 2,3
CAP.: 209.5 GPM

3"BF01R3 CSO
3"x1 1/2"
3"BF01R3 CSO
1"GL08S3

PG 3223
3/4"x1/2"NE60M3
3/4"GA08X3

SET @ 60°C
TIT 6215A
TIC 6215A
OR: 110°C
OL: 10°C
1 1/2"

1/2"BR15T3
1 1/2"
PROVISION FOR CHEM INJECTION

3"-PL-AO3-39002-25H
CONDENSATE TO FEED/ RESIDUE EXCHANGER
CSA-390-PR-PI-0002

NOTE 3
SELECTOR
HS 6215
SIGNAL FROM TIC-6215B
CSA-390-PR-PI-0003

HIGH SELECT
TIC-6202B
CSA-390-PR-PI-0002

PG 3224
TG 6224
3/4"x1/2"NE60M3
3/4"GA08X3
3/4"

3"x2"
2"-PL-BL3-39029-25H
NOTE 2
FROM KEROSENE PRODUCT PUMPS
CSA-390-PR-PI-0008

3/4"GA08T3

50H
N4
N1
N3
N2
E-0220

2"GA03R3
3/4"GA08T3
0-50%
25ET 25H AO3 BL3
FO
TV 6215B
TV 6215B
50-100%
1 1/2"GA08T3
1 1/2"GL08T3

THERMAL EXPANSION
0.75C1 1724
PSV 0222
CAP.: 35.2 GPM
NOTE 1
1"GA01S3 CSO
1"GA08S3 CSO
1"GL08S3

COMBINED FEED FROM CRUDE FEED PUMPS
CSA-570-PR-PI-0001

3/4"GA08X3
3"-PL-AO3-57002-N
(NOTE 2)

SP 3901
3"SR01R3

3/4"x1/2"NE60M3
3/4"GA08X3
1/2"BR15T3
1 1/2"
3"-PL-AO3-39001-N
PROVISION FOR CHEM INJECTION

PG 3225
TV 6215A
TV 6215A
3/4"x1/2"NE60M3
TG 6225
2"GA03R3
2"FC
3"x2"
3/4"
2"-PL-BL3-39030-25H
NOTE 2
KEROSENE TO RUNDOWN COOLE
CSA-390-PR-PI-0014

3/4"GA08T3
25ET 25H AO3 BL3
DC
1 1/2"GA08T3 1 1/2"GL08T3

25ET N
25H AO3 BL3
3/4"GA08S3
1"GA08X3

2"-DC-AO3-39601-25ET
CLOSED DRAIN
CSA-390-PR-PI-0002

1"GA08X3
3/4"GA08X3

[redacted]

E-0225A/B

FEED/ RESIDUE EXCHANGER

SIZE: 324 mm OD x 6215 mm TS/S
TYPE: TEMA AES CLASS 'R'
DESIGN (TS): 1379 kPag @ 399°C/-40°C
(SS): 1034 kPag @ 130°C/-40°C
C.A. (TS/SS): 0.0 mm/3.2 mm
DUTY: 238 kW
TRIM (TS/SS): BT0-39902T/AO3-39902S

SK-231 SKID LIMIT

LP FLARE
CSA-390-PR-PI-0001

8"-FL-AO3-39501-N

LP FLARE
CSA-390-PR-PI-0003

25ET N
BT0 AO3
SP 3911
FIRE
1.5F2 1379
PSV 0225
CAP.: 128 GPM
I.F.
3"x2"
3"BF01R3 CSO
2"x1 1/2"
2"GA03R6 CSO NOTE 1
1"GL08S5

25H N
FIRE
2J3 1034
PSV 0226
CAP.: 4139 SCFM
4"x3"
4"BF01R3 CSO
3"x2"
3"BR01R3 CSO
1"GL08S3

PG 3201
3/4"x1/2"HEX0X3
3/4"GA08X3
TG 6201
1 1/2"
TI 6201
H: 100°C
L: 50°C
1 1/2"

3"-PL-AO3-39003-25H

PROVISION FOR FUTURE DESALTER (CONNECTIONS ON PIPERACK)
3/4"GA08X3
3/4"GA08X3
3"BR01R3
3"

CONDENSATE TO FEED/ DIESEL EXCHANGER
CSA-390-PR-PI-0003

PG 3202
SP 3910
3/4"GA08X3
1/2"GA08T5-T
1/2"BR15T3
1 1/2"
PROVISION FOR CHEM INJECTION

3"-PL-BT0-39045-40ET

40ET
TEMPERATURE MAINTENANCE AT 65°C

RESIDUE PRODUCT FROM FRACTIONATOR FEED/RESIDUE EXCHANGER
CSA-390-PR-PI-0005

3"

RS
3"
N2B
N3A
N4A
N3B
N4B
N1A
N1B
N2A
50H
1"
3"

E-0225A
E-0225B

2"GA03S5-T
3/4"GA08T5-T
1"GA08T5-T
2"x1"
FC
TY 6202
TIC 6202A
TIC 6202B
SET @ 60°C
SET @ 90°C
H: 110°C
L: 60°C
TV-6215A/B
CSA-390-PR-PI-0001

1/2"CH08T5
3/4"GA08T5-T
AL1 BT0
FG

LEVEL CONTROL FROM LIC-1211
CSA-390-PR-PI-0007

2"GA03S5-T
3/4"GA08T5-T

RSP
H: 3.0 m3/hr
L: 1.0 m3/hr
FIC 0200
DI 0200

ESD
XYV 9200
ZIC 9200
ZIO 9200
ZSC 9200
ZSO 9200
ESDV 9200
3"FC

PG 3200
3/4"x1/2"HEX0X3
3/4"GA08X3
TG 6200
1 1/2"

CONDENSATE FROM FEED/ KEROSENE EXCHANGER
CSA-390-PR-PI-0001

3"-PL-AO3-39002-25H

AL1 BT0
2"
TG 6203
3/4"
2"GA03R3
1/2"GA08T3
PG 3203
SP 3908
3"GL01R3
25ET N
TEMPERATURE MAINTENANCE AT 65°C
1/2"BR01R3
NOTE 1
FLUSH FILL CONNECTION

3"-PL-AL3-39046-25ET

TIT 6202
SP 4951
3/4"GA08T3
SP 4950
3"x2"
I.F.
300#
FIT 0200
FE 0200
SP 4941
I.F.
3"x2"
TIT 6230
3/4"
1/2"
TI 6230
HH:120°C
3"BR01R3
3/4"GA08T3
1/2"CH08T3
3/4"GA08T3
FG
AL1 AL3
3"x2"
FY 0200
FY 0200
2"x1"
FC
3"BR01R3
3/4"GA08T3
2"GL01R3
2"BR01R3
3/4"GA822
SP 3909
3"FC
3/4"GA08T3
HPV

RESIDUE TO STORAGE TANK
CSA-390-PR-PI-0016

START-UP
CSA-390-PR-PI-0014
RESIDUE JUMPER

25ET
25H
3/4"GA08X3
25ET
AL3
1"GA08X3
2"
1"GA08X3
3/4"GA08X3

CLOSED DRAIN
CSA-390-PR-PI-0001

2"-DC-AO3-39001-25ET

25ET

CLOSED DRAIN
CSA-390-PR-PI-0003

SK-231 SKID LIMIT

NOTES:

1. FLUSH CONNECTION FOR CLEANING ATMOSPHERIC RESIDUE EXCHANGERS (E-0225A/B, E-0235, AND E-0240). TOLUENE OR HIGH AROMATIC CONDENSATE TO BE UTILIZED FOR CIRCULATING TRHOUGH EXCHANGERS IN ORDER TO DISSOLVE FOULING BUILDUP SUCH AS ASPHALTENE. TOTE (BY OTHERS) FILLED WITH FLUSH FLUID TO BE LOCATED BETWEEN SK-231 AND SK-232. FLUID TO BE PUMPED THROUGH SYSTEM AND THE CIRCUALTED FLUID TO BE RETURNED TO TOTE THROUGH RETURN CONNECTION SHOWN ON CSA-390-PR-PI-0013. SUPPLY / RETURN CONNECTION TO ALLOW CONTINUOS PUMPED CIRCULATION OF FLUSH FLUID FROM TOTE THROUGH EXCHANGERS. HOSES TO BE UTILIZED TO CONNECT FROM FLUSH / FILL CONNECTION TO TOTE..

HOLDS:

[redacted]

UPDATED: Thursday, May 4, 2023 1:13:03 PM EDT
PRINTED: Thursday, May 4, 2023 1:13:33 PM
C:\Users\Rob.Fleming\OneDrive - Worley\Desktop\E-0225A-39-PR-PI-0002.dwg

UPDATED: Thursday, May 4, 2023 1:56:54 PM BY: HUH

E-0230

FEED/ DIESEL EXCHANGER

SIZE: 356 mm OD x 2962 mm TS/S
TYPE: TEMA BFU CLASS 'R'
DESIGN (TS): 1034 kPag @ 130°C/-40°C
(SS): 1379 kPag @ 343°C/-40°C
C.A. (TS/SS): 3.2 mm/3.2 mm
DUTY: 136 kW
TRIM (TS/SS): AO3-39903T/BL3-39903S

SK-231 SKID LIMIT

LP FLARE
CSA-390-PR-PI-0002

VAPOUR RECOVERY UNIT
CSA-390-PR-PI-0015

8"-FL-AO3-39501-N

LP FLARE
CSA-390-PR-PI-0004

SIGNAL TO TV-6215A/B
CSA-390-PR-PI-0001

SIGNAL FROM FIT-0219
CSA-570-PR-PI-0001

PREFRACTIONATOR
A1-1041-M16-PID

NOTE 3
FRACTIONATOR FLASH DRUM
CSA-390-PR-PI-0004

FROM DIESEL PRODUCT PUMPS
CSA-390-PR-PI-0008

DIESEL TO RUNDOWN COOLER
CSA-390-PR-PI-0014

CONDENSATE FROM FEED/RESIDUE EXCHANGER
CSA-390-PR-PI-0002

CLOSED DRAIN
CSA-390-PR-PI-0002

CLOSED DRAIN FROM VRU
CSA-390-PR-PI-0015

CLOSED DRAIN
CSA-800-PR-PI-0002

E-0230

SK-231 SKID LIMIT

NOTES:
1. VALVE STEM TO BE ORIENTED HORIZONTALLY.
2. DELETED.
3. PRE-FRACTIONATOR BYPASS TO ALLOW PROCESSING OF HEAVIER CRUDE OIL NOT REQUIRING PRE-FRACTIONATION. BYPASS MUST ONLY BE UTILIZED WHEN PROCESSING SWEET FEEDSTOCK.
4. FUTURE DIESEL OFFSPEC TIE-IN.

HOLDS:

[redacted]

PRINTED: Thursday, May 4, 2023 1:56:23 PM DWG NAME: C:\Users\HUH\Desktop\BHC Code May 2023\CSA-390-PR-PI-0003.dwg

V-0235
FRACTIONATOR FLASH DRUM
SIZE: 1524 mm ID x 3048 mm S/S
TYPE: VERTICAL 2 PHASE
DESIGN: 758 kPag @ 268°C/-40°C
C.A.: 3.2 mm
TRIM: AL3-39904

P-0235A/B
FRACTIONATOR FEED PUMPS
TYPE: RADIALLY SPLIT VERTICAL INLINE
MODEL: CPC G1 X 2 X 9 VP-CX (API OH4)
DESIGN: 1724 kPag @ 268°C/-40°C
CAPACITY: 15.3 m3/hr @ 91.4 m HEAD
MOTOR: 11 kW @ 3600 RPM, 460V/3Ø/60Hz, TEFC
SEAL SYSTEM: PLAN 23/52
TRIM: BL3-39905A/BL3-39905B

NOTES:
1. VALVE STEM TO BE ORIENTED HORIZONTALLY.
2. DELETED.
3. COOLING GLYCOL SUPPLY AND RETURN FOR PUMP SEAL COOLING.
4. PIPING IS PROTECTED FROM OVERPRESSURE BY SYSTEM DESIGN (OPPSD). REFER TO CSA-000-PI-CC-0002 FOR CALCULATIONS.
5. DELETED.
6. PROVISION FOR FUTURE C5+ TIE-IN CONNECTION.
7. STANDBY PUMP TO AUTO START ON LOSS OF RUN STATUS OF PRIMARY PUMP, AUTO START REQUIRED IN ORDER TO PREVENT COKING IN CRUDE FEED HEATER TUBES WHICH WOULD OCCUR IN THE EVENT OF LOSS OF FLUID FLOW THROUGH TUBES WITHOUT ALLOWING SUFFICIENT TIME FOR COOLING AFTER A HEATER SHUTDOWN.

HOLDS:

SK-231 SKID LIMIT
SK-232 SKID LIMIT
V-0235 #4234
P-0235A
P-0235A-M
(NOTE 7)
P-0235B
P-0235B-M
(NOTE 7)
PLAN 52
PLAN 23
LP FLARE CSA-390-PR-PI-0003
PRE-FRAC BYPASS CSA-390-PR-PI-0003
PREFRACTIONATOR BOTTOMS A1-1041-M16-PID
PREFRACTIONATOR LIQUID LEVEL CONTROLLER SIGNAL A1-1041-M16-PID
LEVEL OVERRIDE FROM PREFRACTIONATOR REFLUX DRUM A1-1041-M18-PID LIC-1023B
NAPHTHA MAKE UP CSA-390-PR-PI-0010
LP FLARE CSA-390-PR-PI-0005
LP FUEL GAS TO VRU CSA-390-PR-PI-0015
LP FUEL GAS CSA-800-PR-PI-0004
TO FRACTIONATOR CSA-390-PR-PI-0007
SIGNAL TO FIC-0224 CSA-390-PR-PI-0005
FEED TO FRACTIONATOR FEED/ RESIDUE EXCHANGER CSA-390-PR-PI-0005
LAHH-914 mm
LAH-762 mm
NLL-457 mm
LAL-305 mm
LALL-152 mm

[redacted]

UPDATED: Thursday, May 4, 2023 2:08:23 PM | BY: HEM
PRINTED: Thursday, May 4, 2023 2:09:04 PM | DWG NAME: C:\Users\HEM\Desktop\BRC Cross May 2023\CSA-390-PR-PI-0004.dwg

UPDATED: Thursday, May 4, 2023 2:17:28 PM BY: HEM

E-0235
FRACTIONATOR FEED / RESIDUE EXCHANGER

SIZE: 273 mm OD x 4267 mm TS/F
TYPE: TEMA AES CLASS 'R'
DESIGN (TS): 1379 kPag @ 399°C/-40°C
(SS): 1724 kPag @ 268°C/-40°C
C.A. (TS/SS): 0.0 mm/3.2 mm
DUTY: 220 kW
TRIM (TS/SS): BT0-39906T/BL3-39906S

NOTES:
1. VALVE STEM TO BE ORIENTED HORIZONTALLY.
2. PIPING IS PROTECTED FROM OVERPRESSURE BY SYSTEM DESIGN (OPPSD). REFER TO CSA-000-PI-CC-0002 FOR CALCULATIONS.

HOLDS:

SK-231 SKID LIMIT
SK-232 SKID LIMIT
SK-232 SKID LIMIT

LP FLARE CSA-390-PR-PI-0004
8"-FL-AO3-39501-N
LP FLARE CSA-800-PR-PI-0001
25H N BL3 AO3
FIRE 2H3 1724 PSV 0236 CAP.: 4075 SCFM
3"BF01R3 CSO
3"X2"
3"GA03R3 CSO NOTE 1
1"GL08T3
3"
TIC-6227 CSA-390-PR-PI-0006
PG 3229
TI 6229
TIT 6229
3/4"x1/2"HEBM3
1 1/2"
LY 1204
3"X2"
3"CH03R3
3"GA03R3
3/4"GA08T3
3"-PL-BL3-39016-25H
FEED TO CRUDE HEATER CSA-390-PR-PI-0006
PG 3230
SP 3227
TG 6230
2"GA03R3-T
1/2"GA08T5-T
2"GL03R3
3/4"GA08T5-T
3"-PL-BT0-39044-40ET
RESIDUE FROM STEAM SUPERHEATER CSA-390-PR-PI-0013
3"X2"
2"
RS
1"
3"
50H
N2
N3
N1
N4
E-0235
1"GL08T5-T
PG 3228
TG 6228
PG 3231
SP 3226
TG 6231
2"GA08T5-T
FRACTIONATOR FLASH DRUM LEVEL CONTROLLER, LIC-1204
CSA-390-PR-PI-0004
RSP
GI 0224
FIC 0224
H: 12000 kg/hr
L: 5500 kg/hr
BMS
FAH 0225
FALL 0225
LL: 8,5 m3/hr
FIT 0224
FE 0224
FSLL 0225
3/4"
FROM FRACTIONATOR FEED PUMP CSA-390-PR-PI-0004
3"-PL-BL3-39015-25H NOTE 2
2" 300#
RESIDUE TO FEED/ RESIDUE EXCHANGER CSA-390-PR-PI-0002
3"-PL-BT0-39045-40ET
25ET 25H AL3 BL3
1"GA08T3
25ET 40ET AL3 BT0
1"GA08T5-T
2"-DC-AL3-39602-25ET
CLOSED DRAIN CSA-390-PR-PI-0012
1"GA08T3
2"
3/4"GA08T3

PRINTED: Thursday, May 4, 2023 2:13:03 PM DWG NAME: C:\Users\HEM\Desktop\IBR\C Code May 2023\CSA-390-PR-PI-0003.dwg

UPDATED: Thursday, May 4, 2023 2:52:05 PM BY: HEM

H-0235
CRUDE FEED HEATER

MAKE/MODEL: TULSA HEATERS INC
OUTPUT: 2072 kW (7.07 MMBTU/hr)
TYPE: HORIZONTAL CABIN HEATER
COIL DESIGN: 1724 kPag @ 399°C/-40°C
CA.: 1.6 mm
NOTE: CHROME MATERIAL FOR COIL

PK-235
FUEL GAS PACKAGE

H-0235

NOTE 1

N8 4" SC

1 1/2" C4A

1 1/2" C4B

1 1/2" C3

1 1/2" C5B

1"x1/2"

BMS TAHH 8222 HH: 350 °C

TIT 8222 H: 325°C

N1 3"

BMS TAHH 8225 HH: 440 °C

TIT 8225 H: 420°C

1 1/2" C2A

1 1/2" C2C

TIT

1 1/2" C2B

C7C 1 1/2"

1/2"GA08T5-T

N7A 4" SC

N7B 3" SC

TI 8226 H: 900°C

TIT 8226

C1 1 1/2"

1"NPT C5A

PDT 3226

PDAHH 3226 HH: 0.30" W.C.

BMS

1/2"GA08T5-T

PDT 3301

PDI 3301

N2 3"

H65

N3 3"

N5 3"

BLOCKED-IN FIRED HEATER

2H3 1724

PSV 8237

CAP.: 4075 SCFM

4"x3" CSO 4"GA03R7-T

4"-PL-BP3-39087-40H

3"x2"

CSO 3"GA03R5

1/2"

3" R.S. NOTE 2

ESD

XY 9209

ZIC 9209

ZIO 9209

ZSC 9209

ZSO 9209

TG 8239

ESDV 9209

1 1/2"

FEED FROM FRACTIONATOR FEED/ RESIDUE EXCHANGER

CSA-390-PR-PI-0005

3" FC

25H

3"-PL-BL3-39016-25H

BMS TAHH 8224 HH: 440°C

TIT 8224 H: 420°C

C7A 1 1/2"

BMS TAHH 8223 HH: 440°C

TIT 8223 H: 420°C

C7B 1 1/2"

N4 3"

RSP TIC 8227 H: 365°C

SET @ 375°C ZAHH 8228 BMS

TIT 8227

SP 8230

SP 8231

TE 8228

1/2"

1 1/2"

3" GA03R5 3" 6"x3" 6"

R.S. NOTE 2

N6

C6A 1 1/2" 1"x1/2" 1/2"GA08T5-T

C6B 1 1/2"

1/2"GA08T5-T

ESD

XY 9210

ZIC 9210

ZIO 9210

ZSC 9210

ZSO 9210

ESDV 9210

6" FC

25H

6"-PL-BP3-39017-65H

6"-PL-BP3-39066-65H

FEED TO CRUDE FRACTIONATOR

CSA-390-PR-PI-0007

BMS IG 9217 BE 9217 BURNER "A"

BMS IG 9218 BE 9218 BURNER "B"

BMS IG 9219 BE 9219 BURNER "C"

1"-FG-AL1-39309-N 1" 1/2"

1"-FG-AL1-39312-N 1" 1/2"

1"-FG-AL1-39310-N 1" 1/2"

1"-FG-AL1-39313-N 1" 1/2"

1"-FG-AL1-39311-N 1" 1/2"

1/2"-FG-AL1-39314-N 1" 1/2"

100

TY 8227

NOTE 3

PCV 9250

PCV 9251

PCV 9252

1/2"BR15T3

1"BR15T3

1"-IA-AL1-39206-N

3"-FG-AL1-39315-N

TO SAFE LOCATION

DENSITY INDICATION FROM DI-0206B

CSA-390-PR-PI-0035

1191-0000-PR-PI-0001

INSTRUMENT AIR

CSA-800-PR-PI-0033

2"-IA-AL1-39205-N

BA-636 1" 2"x1" 1"

LP FUEL GAS

CSA-800-PR-PI-0034

2"-FG-AL1-39305-N

BA-130 2"

1191-0000-PR-PI-0001

XS 9265 START PERMISSIVE

XY 9265 REMOTE SHUTDOWN

XA 9265 RUN STATUS

UA 9265 UNIT ALARM

PROCESS CONTROL PERMISSIVE

PDI DIFFERENTIAL PRESSURE

TI TUBE SKIN

TI TUBE SKIN

TI TUBE SKIN

TI STACK TEMPERATURE

TI PROCESS TEMPERATURE

PK-235
REFERENCE DRAWINGS:

1065-10-PID-0001

NOTES:

1. DAMPER TO INCLUDE MECHANICAL STOP TO PREVENT FULL CLOSURE.
2. REMOVABLE SPOOL PROVIDED TO ALLOW LINE PIGGING.
3. PURGE AIR TO UV FLAME SCANNERS.

HOLDS:

[redacted]

PRINTED: Thursday, May 4, 2023 2:52:04 PM DWG NAME: C:\Users\HEM\Desktop\BHC Docs May 2023\CSA-390-PR-PI-0006.dwg

T-0240
CRUDE FRACTIONATOR

SIZE: 1,524 mm ID x 27,432 mm S/S
TYPE: VERTICAL TOWER
DESIGN: 758 kPag/FV @ 399°C / -40°C
C.A.: 5.1 mm/ 0 mm
TRIM: BL3-39907/BT0-39908

NOTES:

1. FUEL GAS SUPPLY FROM TUBING TAKEN FROM SUPPLY HEADER ON SK-232.
2. PIPING IS PROTECTED FROM OVERPRESSURE BY SYSTEM DESIGN (OPPSD). REFER TO CSA-000-PI-CC-0002 FOR CALCULATIONS.
3. REMOVABLE SPOOL FOR FUTURE ESD VALVE.

HOLDS:

CASCADE TEMPERATURE SIGNAL TO FIC-0211 — CSA-390-PR-PI-0010
SET @ 140°C — HH: 170°C — H: 150°C — L: 100°C
HH: 200 kPag — H: 85 kPag
SIGNAL TO LV-1212 — CSA-390-PR-PI-0008
SIGNAL TO LV-1213 — CSA-390-PR-PI-0008
FEED FROM FRACTIONATOR FLASH DRUM — CSA-390-PR-PI-0004 — 4"-PL-AL3-39011-25H
VAPOUR FROM DIESEL STRIPPER — CSA-390-PR-PI-0008 — 3"-PG-AL3-39033-40H
FEED FROM CRUDE FEED HEATER — CSA-390-PR-PI-0006 — 6"-PL-BP3-39006-65H
LP STEAM — CSA-390-PR-PI-0013 — 2"-SL-BL1-39705-40ET
MIN FLOW RECYCLE RESIDUE PRODUCT PUMP — CSA-390-PR-PI-0012 — 2"-PL-BT0-39047-50ET
PROVISION FOR CORROSION COUPON
OVERFLOW PIPE
FIRE — 3L4 758 — PSV 6240 — CAP.: 11,950 Nm³/h
LP FLARE — CSA-800-PR-PI-0001 — 6"-FL-AO3-39502-N
TO FRACTIONATOR OVERHEADS CONDENSER — CSA-390-PR-PI-0009 — 10"-PG-AO3-39018-50H
REFLUX FROM FRACTIONATOR REFLUX PUMPS — CSA-390-PR-PI-0010 — 3"-PL-AO3-39048-N
VAPOR FROM KEROSENE STRIPPER — CSA-390-PR-PI-0008 — 3"-PG-AL3-39025-25H
TO KEROSENE STRIPPER — CSA-390-PR-PI-0008 — 4"-PL-AL3-39024-25H
TO DIESEL STRIPPER — CSA-390-PR-PI-0008 — 3"-PL-AL3-39032-40H
OVERFLASH FROM DIESEL STRIPPER — CSA-390-PR-PI-0008 — 2"-PL-BL3-39040-40H
LEVEL SIGNAL TO FIC-0200 — CSA-390-PR-PI-0002
TO RESIDUE PUMPS — CSA-390-PR-PI-0012 — 3"-PL-BT0-39042-50ET (NOTE 2)
LAHH-762 mm
LAH-610 mm
NLL-457 mm
LAL-305 mm
LALL-152 mm
T-0240
#4233

PRINTED: Friday, May 5, 2023 10:14:10 AM | DWG LMVEE: C:\Users\mbell\Desktop\OneDrive_1_22-25-2023\CSA-390-PR-PI-0007.dwg

T-0245
DIESEL STRIPPER
SIZE: 457 mm OD x 6553 mm S/F
TYPE: VERTICAL PACKED TOWER
DESIGN: 758 kPag/FV @ 343°C / -40°C
C.A.: 3.2 mm
TRIM: AL3-39909

T-0250
KEROSENE STRIPPER
SIZE: 457 mm OD x 6553 mm S/F
TYPE: VERTICAL PACKED TOWER
DESIGN: 758 kPag/FV @ 232°C / -40°C
C.A.: 3.2 mm
TRIM: AL3-39910

P-0245A/B
DIESEL PRODUCT PUMPS
TYPE: RADIALLY SPLIT VERTICAL INLINE
MODEL: CPC S1 X 1.5 X 7 VP-CX)API OH4)
DESIGN: 1379 kPag @ 343°C/-40°C
CAPACITY: 2.4 m3/hr @ 30 m HEAD
MOTOR: 5.6 kW @ 3600 RPM,
460V/3Ø/60 Hz, TEFC
SEAL SYSTEM: PLAN 23/52
TRIM: BL3-39911A / BL3-39911B

P-0250A/B
KEROSENE PRODUCT PUMPS
TYPE: RADIALLY SPLIT VERTICAL INLINE
MODEL: CPC S2 X 3 X 13 VP-CX (API OH4)
DESIGN: 2276 kPag @ 232°C/-40°C
CAPACITY: 5.5 m3/hr @152 m HEAD
MOTOR: 22 kW @ 3600 RPM,
460V/3Ø/60 Hz, TEFC
SEAL SYSTEM: PLAN 23/52
TRIM: BL3-39912A / BL3-39912B

NOTES:
1. PIPING IS PROTECTED FROM OVERPRESSURE BY SYSTEM DESIGN (OPPSD). REFER TO CSA-000-PI-CC-0002 FOR CALCULATIONS.
2. EXTENSION SPOOL FOR PROBE TO SIT OUTSIDE VESSEL ID SO TURBULENT FLOW NEAR LIQUID OUTLET NOZZLE DOES NOT INTERFERE WITH THE PROBE'S ABILITY TO IDENTIFY LEVEL.

HOLDS:

SK-233 SKID LIMIT

VAPOR TO CRUDE FRACTIONATOR CSA-390-PR-PI-0007
LP FUEL GAS CSA-390-PR-PI-0010
CRUDE FRACTIONATOR KEROSENE STRIPPER DRAW CSA-390-PR-PI-0007
SIGNAL FROM TIC-6205 CSA-390-PR-PI-0007
FLOW CONTROLLER FIC-0213 CSA-390-PR-PI-0014
LP STEAM CSA-390-PR-PI-0013

T-0250 #4235
T-0245 #4236

P-0250A / P-0250A-M
P-0250B / P-0250B-M
P-0245A / P-0245A-M
P-0245B / P-0245B-M

KEROSENE TO FEED/KEROSENE EXCHANGER CSA-390-PR-PI-0001
OVERFLASH TO CRUDE FRACTIONATOR CSA-390-PR-PI-0007
DIESEL TO FEED/ DIESEL EXCHANGER CSA-390-PR-PI-0003

PRINTED: Thursday, July 29, 2021 9:33:23 AM BY: Heidi
UPDATED: Thursday, July 29, 2021 9:31:32 AM BY: Heidi

AC-0255
FRACTIONATOR CONDENSER
MODEL: ALFA LAVAL E108-2-20
TYPE: HORIZONTAL FORCED DRAFT
DESIGN: 758 kPag/FV @ 204°C / -40°C
C.A.: 3.2 mm
DUTY: 2244 kW
TRIM: AO3-39913

AC-0255A/B-M
FRACTIONATOR CONDENSER MOTORS
DUTY: 22 kW @ 1750 RPM, 460 V/3Ø/60 Hz, TEFC

NOTES:
1. LOCATE AMBIENT AIR SENSOR DIRECTLY UNDER FAN WHERE AIR IS WELL MIXED.
2. CHEMICAL INJECTION THROUGH CUT THERMOWELL WITH INJECTION POINT POSITIONED IN CENTRE OF PIPE.
3. STEAM SYSTEM CONVERTED TO FUEL GAS (DESIGN CHANGE POST STARTUP). STEAM CONDENSATE SYSTEM NOT REQUIRED.

HOLDS:

PRODUCED WATER PUMPS
CSA-390-PR-PI-0011
1 1/2"-PW-AO3-39052-25ET
1 1/2"GA08S3
STEAM CONDENSATE
CSA-800-PR-PI-0007
2"-SL-AO3-39709-25ET
NOTE 3
25ET
2"BR01R3
CSC
3/4"GA08X3
FLUSH CONN.
NOTE 2
SP 9211
SP 9381
CRUDE FRACTIONATOR
CSA-390-PR-PI-0007
50H
NP
10"-PG-AO3-39018-50H
TG 8209
1 1/2"
2"
1/2"BR15T3
1/2"BR15T3
MIN. 10 PSI CRACK. PRES.
1/2"GA07S-2
1/2"RES013
PH - NEUTRALIZER
CSA-390-PR-PI-0017
TV 6210
FC
FO
RECIRCULATION
AC-0255
HEAT MEDIUM SUPPLY
CSA-800-PR-PI-0006
2"-HM-AL1-39401-25H
2"x1 1/2"
1 1/2"GA08S3
25H
1 1/2"x1"
1"
3/4"GA08X3
HEAT MEDIUM RETURN
CSA-800-PR-PI-0006
2"-HM-AL1-39402-25H
1 1/2"GL08S3
SK-233 SKID LIMIT
TV 6211
SET @ 15°C
TIC 6211
H:45°C
L:10°C
TIT 6211
NOTE 1
VSHH 9226
VAHH 9226
AC-0255A-M
VSHH 9227
VAHH 9227
AC-0255B-M
XI 9226
FAULT
MCC VFD
SY 9226
XA 9226
STATUS
XY 9226
ON
OFF
ESD
HS 9226
HOA
XI 9227
SY 9227
XA 9227
XY 9227
HS 9227
MANUAL
10"GA08S3
0-50%
SPLIT RANGE
SET @ 57°C
TIC 6210
H:70°C
L:35°C
50-100%
6"-PL-AO3-39019-40ET
TG 8210
TIT 8210
FRACTIONATOR REFLU
CSA-390-PR-PI-0

[redacted]

UPDATED: Thursday, July 29, 2021 9:52:27 AM BY: Heidi
PRINTED: Thursday, July 29, 2021 10:02:10 AM DWG NAME: \\Fsen.local\share\EDM_Jhome\Heidi H\Drawings\Other RELEASE\OPRA\CF\edit\Crude Rec 4e-Batts July 29\PCSA-390-PR-PI-A-0009.dwg

UPDATED: Friday, May 5, 2023 11:27:29 AM BY: HEidt

V-0255
FRACTIONATOR REFLUX DRUM
SIZE: 1219 mm ID x 3048 mm S/S
TYPE: HORIZONTAL 3-PHASE SEPARATOR
DESIGN: 758 kPag/ FV @ 93°C/-40°C
C.A.: 3.2 mm
TRIM: AO3-39914

P-0255A/B
FRACTIONATOR REFLUX PUMPS
TYPE: RADIALLY SPLIT VERTICAL INLINE
MODEL: CPC H1,5 X 3 X 7 VP-CX (API OH4)
DESIGN: 1586 kPag @ 93°C / -40°C
CAPACITY: 22,6 m3/hr @ 40 m HEAD
MOTOR: 7,5 kW @ 3600 RPM, 460 V / 3ϕ / 60 Hz, TEFC
SEAL SYSTEM: PLAN 14/ 52
TRIM: AO3-39915A / AO3-39915B

SK-233 SKID LIMIT

NOTES:
1. PIPING IS PROTECTED FROM OVERPRESSURE BY SYSTEM DESIGN (OPPSD). REFER TO CSA-000-PI-CC-0002 FOR CALCULATIONS.
2. CHECK VALVE WITH LOW CRACKING PRESSURE (<0.2 psi).
3. HEAT TRACE BOOT, BOTTOM 500 mm OF VESSEL AND BOTTOM 1/3 OF LEVEL BRIDLES FOR FREEZE PROTECTION.
4. DELETED.
5. LIGHT NAPHTHA ONLY TO BE UTILIZED FOR LIFT IN FRACTIONATOR WHEN PROCESSING SWEET CONDENSATE / CRUDE FEEDSTOCK.
6. PROVISION FOR CORROSION INHIBITOR INJECTION. CHEMICAL ADDITION NOT REQUIRED BASED ON COMPOSITIONS OUTLINED IN DESIGN BASIS.

HOLDS:

P-0255A
P-0255A-M

P-0255B
P-0255B-M

PRINTED: Friday, May 5, 2023 11:28:05 AM DWG NAME: C:\Users\mheidt\Desktop\BRC Crude May 2023\CSA-390-PR-PI-4237(1).dwg

P-0260A/B

FRACTIONATOR PRODUCED WATER PUMPS

TYPE: WANNER: HYDRACELL H25EKSGHFHHB
DESIGN: 1724 kPag @93°C / 40°C
CAPACITY: 2.5 m3/hr @ 81 m HEAD
MOTOR: 1.5 kW @ 1800 RPM, 460V/3Ø/60Hz, TEFC
SEAL SYSTEM: SEAL-LESS
TRIM: AO3-39916 / AO3-39917

NOTES:
1. COOLING GLYCOL SUPPLY AND RETURN FOR P-0245A/B & P-0250A/B SEAL COOLING.

HOLDS:

SK-233 SKID LIMIT

COOLING GLYCOL SUPPLY
CSA-800-PR-PI-0005
2"-GL-AL1-39422-N
NOTE 1
3/4"GA08T3
TYPICAL CONNECTION QTY: 13
PCV
1/2"BR15T3

COOLING GLYCOL RETURN
CSA-800-PR-PI-0005
2"-GL-AL1-39423-25PP
NOTE 1
3/4"GA08T3

INSTRUMENT AIR
CSA-800-PR-PI-0003
2"-IA-AL1-39203-N
2"x1"
1"BR15T3

LP FUEL GAS
CSA-800-PR-PI-0004
2"-FG-AL1-39306-N
3/4" 3/4" 3/4"
2"x3/4"
3/4"BR15T3
3/4"-FG-BL1-39307-N
3/4"GA08T3
3/4"CH08T3
AL1 | BL1

FUEL GAS BLANKET
CSA-390-PR-PI-0010

STEAM CONDENSATE TO FRACTIONATOR CONDENSER
CSA-800-PR-PI-0007
2"-SL-AO3-39708-25ET
1"GA08X3
UTILITY STATION
1"SL08T3
1"GA08T3
1"CH08T3
2"x1"
NP
2"-SL-AL1-39707-25ET
LP STEAM
CSA-800-PR-PI-0007
3/4"CH08S3
3/4"GA08S3
AO3 | AL1
SP 8001

LIC-1224
CSA-390-PR-PI-0010
FRACTIONATOR CONDENSER
CSA-390-PR-PI-0009
25EL1
1 1/2"-PW-AO3-39052-25ET

SET @ 800 kPag
PCV 3225
1 1/2"GA08S3
1 1/2"x1"
3/4"GA08S3
FE
DC
1"GL08S3
1"GA08S3

B
BLOCKED FLOW
PSV 0260
3/4C1 1724
CAP.: 44.6 GPM
CSO
1"GA08S3
1"3/4"
1"GL08S3
PG 3260A
3/4"x1/2"NE06M3
SP 3992
SP 3993
SP 3994
150% 40 MESH
1"
RS
1-1/2" (3Ø STRAIGHT)
1 1/2"x1"
1 1/2"GA08S3
3/4"GA08X3
1 1/2"CH08S3
SP 3998
FAULT
XI 9230
STATUS
XA 9230
HOA
HS 9230
XY 9230
START
STOP
MCC
ESD
P-0260A
P-0260A-M

PRODUCED WATER FROM CRUDE FRACTIONATOR REFLUX DRUM
CSA-390-PR-PI-0010
1 1/2"-PW-AO3-39050-25ET
25EL1
1 1/2"-PW-AO3-39051-25ET
SP 0215
PI 0226
H:0.7m3/hr
L:0.1m3/hr
FIT 0226
FE 0226
10Ø
5Ø
LY 1224
1" FC
2"x1 1/2"
2"
SOUR WATER FLASH VESSEL
A0-1041-M90-PID

B
BLOCKED FLOW
PSV 0261
3/4C1 1724
CAP.: 44.6 GPM
PG 3260B
3/4"x1/2"NE06M3
SP 3995
SP 3996
SP 3997
P-0260B
P-0260B-M

SK-233 DRAIN SUMP
2"GA01R3

CLOSED DRAIN
CSA-390-PR-PI-0010
2"-DC-AO3-39603-25ET
2"BR01R3
CSO
3/4"GA02X3
CLOSED DRAIN
CSA-800-PR-PI-0002

SK-233 SKID LIMIT

[redacted]

UPDATED: Friday, May 5, 2023 11:52:45 AM BR1 HEAT

PRINTED: Friday, May 5, 2023 11:33:04 AM DWG NAME: C:\Users\nicks\Desktop\BRC Drums May 2023\CSA-390-PR-PI-0011.dwg

UPDATED: Monday, May 15, 2023 8:28:56 AM BY: HEidt

P-0240A/B
RESIDUE PRODUCT PUMPS

TYPE: RADIALLY SPLIT VERTICAL INLINE
MODEL: CPC S1.5 X 3 X 7 VP-CX (API OH4)
DESIGN: 1379 kPag @ 399°C/-40°C
CAPACITY: 4.5 m3/hr @ 44 m HEAD
MOTOR: 5.6 kW @ 3600 RPM, 460V/3Ø/60Hz, TEFC
SEAL SYSTEM: PLAN 23/52
TRIM: BT0-39918A/BT0-39918B

NOTES:
1. PIPING IS PROTECTED FROM OVERPRESSURE BY SYSTEM DESIGN (OPPSD). REFER TO CSA-000-PI-CC-0002 FOR CALCULATIONS.
2. COOLING GLYCOL SUPPLY AND RETURN FOR PUMP SEAL COOLING.

HOLDS:

SK-232 SKID EDGE

P-0240A
P-0240A-M

P-0240B
P-0240B-M

INSTRUMENT AIR
CSA-800-PR-PI-0003

COOLING GLYCOL SUPPLY
CSA-800-PR-PI-0005

COOLING GLYCOL RETURN
CSA-800-PR-PI-0005

LP FUEL GAS
CSA-800-PR-PI-0004

MIN FLOW RECYCLE
CSA-390-PR-PI-0007

RESIDUE PRODUCT
CSA-390-PR-PI-0007

CLOSED DRAIN
CSA-390-PR-PI-0005

LP FLARE
CSA-800-PR-PI-0001

RESIDUE PRODUCT TO STEAM SUPERHEAT EXCHANGER
CSA-390-PR-PI-0013

CLOSED DRAIN
CSA-390-PR-PI-0013

2"-FL-AL1-39504-N
VENT LINE FOR PUMP SEAL PLANS

PLAN 52
PLAN 23
TYPICAL CONNECTION QTY: 8
INTEGRAL ORIFICE METER
LEVEL SIGHT MANIFOLD

PRINTED: Monday, May 15, 2023 10:33:18 AM DWG NAME: C:\Users\HEidt\Desktop\BRC Docs May 2023\CSA-390-PR-PI-0012.dwg

E-0240

STEAM SUPERHEATER EXCHANGER

SIZE: 324 mm OD x 3353 mm TS/S
TYPE: TEMA AGS CLASS 'R'
DESIGN: (TS): 1379 kPag @ 399°C / -40°C
(SS): 862 kPag @ 343°C / -40°C
C.A. (TS/SS): 0.0 mm / 1.6 mm
DUTY: 35 kW
TRIM (TS/SS): BT0-39919T / BL1-39919S

NOTES:
1. VALVE STEM TO BE ORIENTED HORIZONTALLY.
2. PIPING IS PROTECTED FROM OVERPRESSURE BY SYSTEM DESIGN (OPPSD). REFER TO CSA-000-PI-CC-0002 FOR CALCULATIONS.
3. ATMOSPHERIC RESIDUE SYSTEM FLUSH CONNECTION. FOR ADDITIONAL DETAIL REFERENCE NOTE 2 ON CSA-390-PR-PI-0002.
4. STEAM SYSTEM CONVERTED TO FUEL GAS (DESIGN CHANGE POST START UP)

HOLDS:

SK-232 SKID LIMIT

ATMOSPHERIC RESIDUE FROM RESIDUE PRODUCT PUMPS
CSA-390-PR-PI-0012
3"-PL-BT0-39043-50ET
NOTE 2

RESIDUE TO FRACTIONATOR FEED/RESIDUE EXCHANGER
CSA-390-PR-PI-0005
3"-PL-BT0-39044-40ET

STEAM CONDENSATE TO FRACTIONATOR CONDENSER
CSA-800-PR-PI-0007
NOTE 4
2"-SL-AO3-39706-25ET

LP STEAM
CSA-800-PR-PI-0007
NOTE 4
2"-SL-AL1-39700-25ET

CLOSED DRAIN
CSA-390-PR-PI-0012

FLUSH RETURN CONNECTION
NOTE 3

CAP.: 259 GPM TUBE RUPTURE BL1 AL1
C/W TEST LEVER
VENT TO SAFE LOCATION
3"-SL-AL1-39711-25ET

PI 3220 H:600 kPag L:250 kPag
PG 3220
PIT 3220
TI 6220 H:330°C L:200°C
TG 6220
TIT 6220
PROVISION FOR CORROSION COUPON
3"-SL-BL1-39702-40ET

PG 3235
PG 3236
PG 3226
TG 6235
TG 6236
TG 6226
1 1/2"

SUMMATION
FI 0212
SET @ 59 Sm3/hr FIC 0212A H:75 Sm3/hr L:35 Sm3/hr
SET @ 57 Sm3/hr FIC 0212B H:75 Sm3/hr L:35 Sm3/hr
SET @ 422 Sm3/hr FIC 0212C H:525 Sm3/hr L:250 Sm3/hr
FIT 0212A/B/C
5 - VALVE MANIFOLD
FE 0212A/B/C
FV 0212A/B/C
XYV 0212A/B/C
ESD

LP STEAM TO KEROSENE STRIPPER
CSA-390-PR-PI-0008
NOTE 4
2"-SL-BL1-39703-40ET

LP STEAM TO DIESEL STRIPPER
CSA-390-PR-PI-0008
NOTE 4
2"-SL-BL1-39704-40ET

LP STEAM TO CRUDE FRACTIONATOR
CSA-390-PR-PI-0007
NOTE 4
2"-SL-BL1-39705-40ET

E-0240

3"-SL-BL1-39701-25ET

UTILITY STATION FOR SK-231/232

SK-232 DRAIN SUMP

2"-DC-AL3-39602-25ET

CLOSED DRAIN
CSA-800-PR-PI-0002

SK-232 SKID LIMIT

PRINTED: Tuesday, May 9, 2023 11:52:56 AM DWG NAME: C:\Users\mkirk\Desktop\Orcs\Au_s_s2\AR-2023\CSA-390-PR-PI-0013.dwg
UPDATED: Tuesday, May 2, 2023 12:42:18 PM BY: Mkirk

AC-0245
DIESEL COOLER
MODEL: ALFA LAVAL E90-2-21
TYPE: HORIZONTAL FORCED DRAFT
DESIGN: 1379 kPag @ 343°C / -40°C
C.A.: 3.2 mm
DUTY: 266 kW
TRIM: BL3-39920

AC-0250
KEROSENE COOLER
MODEL: ALFA LAVAL E90-2-21
TYPE: HORIZONTAL FORCED DRAFT
DESIGN: 2276 kPag @ 232°C / -40°C
C.A.: 3.2 mm
DUTY: 294 kW
TRIM: BL3-39921

AC-0260
NAPHTHA COOLER
MODEL: ALFA LAVAL E90-2-21
TYPE: HORIZONTAL FORCED DRAFT
DESIGN: 1586 kPag @ 93°C / -40°C
C.A.: 3.2 mm
DUTY: 90 kW
TRIM: AO3-39922

AC-0245-M
PRODUCT COOLER MOTORS
DUTY: 18 kW @ 1750 RPM, 460 V / 30 / 60 Hz, TEFC

NOTES:
1. SLOPE GRADING UNDERNEATH AIR COOLER TO PREVENT POOL FIRE.
2. PIPING IS PROTECTED FROM OVERPRESSURE BY SYSTEM DESIGN (OPPSD). REFER TO CSA-000-PI-CC-0002 FOR CALCULATIONS.
3. CHEMICAL INJECTION THROUGH CUT THERMOWELL WITH INJECTION POINT POSITIONED IN CENTRE OF PIPE.
4. FUTURE DIESEL OFFSPEC TIE-IN.
5. FUTURE DIESEL RUNDOWN IN PLANT 1.

HOLDS:

COMBINED NAPHTHA
CSA-390-PR-PI-0010
3"-PL-AO3-39022-N
KEROSENE PRODUCT
CSA-390-PR-PI-0001
2"-PL-BL3-39030-25H
NOTE 2
DIESEL PRODUCT
CSA-390-PR-PI-0003
2"-PL-BL3-39038-25H
NOTE 2
SK-231 SKID LIMIT
NOTE 1
MANUAL
AC-0245
AC-0250
AC-0260
AC-0245-M
AC-0250-M
3"-PL-AO3-39065-N
NOTE 2
HIGH SELECT
0-50%
50-100%
SET @ 43°C H:60°C
SET @ 3.9 m3/hr H: 6.0 m3/hr L: 0.5 m3/hr
SET @ 2.0 m3/hr H:3.0 m3/hr L: 0.5 m3/hr
LOW SELECT
MAXIMIZE
MIN. 10 PSI CRACK. PRES.
NOTE 4
NAPHTHA TO STORAGE
CSA-570-PR-PI-0002
3"-PL-AL3-39023-N
H2S SCAVENGER
CSA-390-PR-PI-0017
START UP
CSA-390-PR-PI-0002
RESIDUE JUMPER
KEROSENE STRIPPER LEVEL CONTROLLER
CSA-390-PR-PI-0008
KEROSENE TO STORAGE
CSA-570-PR-PI-0002
2"-PL-BL3-39031-N
DIESEL STRIPPER LEVEL CONTROLLER
CSA-390-PR-PI-0008
DIESEL TO STORAGE
CSA-570-PR-PI-0002
2"-PL-AL3-39039-N
DIESEL TO STORAGE
CSA-390-PR-PI-0016
NOTE 5

UPDATED: Thursday, August 19, 2021 12:54:21 PM BY: rhicks

PK-270
VAPOUR RECOVERY UNIT
MAKE/MODEL: RO-FLO MODEL 211M
MOTOR: 30 kW @ 900 RPM, 460V/3Ø/60Hz, TEFC
TYPE: SINGLE STAGE VANE COMPRESSOR

NOTES:
1. SPARE LINE RUNNING NORTH-SOUTH BETWEEN SK-231 AND END OF [redacted] PIPERACK.

HOLDS:

SK-231 SKID LIMIT

PK-270 BUILDING LIMIT

SK-231 SKID LIMIT

INSTRUMENT AIR
CSA-390-PR-PI-0001
2"-IA-AL1-39204-N
VENDOR PACKAGE

LP FUEL GAS
CSA-390-PR-PI-0004
2"-FG-AL1-39308-N

COOLING GLYCOL SUPPLY
CSA-800-PR-PI-0005
2"-GL-AL1-39424-N

OFF-GAS FROM PRE-FRACTIONATOR
. A1-1041-M19-PID
3"-PG-AO3-39061-25ET
3"x4"x3"

OFF-GAS FROM FRACTIONATOR
CSA-390-PR-PI-0010
4"-PG-AO3-39059-25ET

2"-FL-AO3-39505-N
LP FLARE
CSA-390-PR-PI-0003

PCV SET @ 250 kPag
PCV SET @ 225 kPag
PG
2"BR01R3
2"CH01R3
1"GL08T3
1"BR15T3
3/4"GA08X3
SAMPLE POINT
A03 AL1
SP 0217
SP 4048
3/4"GA08T3
1 1/2"

2"-PG-AO3-39062-25ET
STEAM SUPERHEATER
. CSA-800-PR-PI-0007

2"-PL-AO3-39063-N
NGL TO CONDENSATE STABILIZER
A1-1041-M12-PID

NOTE 1

2"-GL-AL1-39425-25PP
COOLING GLYCOL RETURN
CSA-800-PR-PI-0005

2"-DC-AO3-39604-25ET
CLOSED DRAIN
CSA-390-PR-PI-0003

PK-270
REFERENCE DRAWINGS:
101054-101 (CSA-270-PR-PI-0001 TO 0004)

XY 9270 REMOTE ENABLE/ SHUTDOWN
XA 9270 RUN STATUS
UA 9270 GENERAL ALARM

[redacted]

PRINTED: Thursday, August 19, 2021 12:55:32 PM DWG: \\Ami\Jobs\Haws\EDI_Jhomrich\Drawings\OTHER FILES\98\ROFRAC\Facility\Cads Files\As-Built July 2021\CSA-390-PR-PA00 f5.dwg

UPDATED: Thursday, August 19, 2021 12:42:24 PM BY: nkirk

TK-0220
ATMOSPHERIC RESIDUE STORAGE TANK
SIZE: 4724 mm OD x 9754 mm HIGH
TYPE: API 12F MODIFIED
DESIGN: 16 oz./0.5 oz. @ 121°C/-40°C
CAPACITY: 159 m3 (1000 BBL) NOMINAL
TRIM: AL3-9220

M-0220
ATMOSPHERIC RESIDUE TANK AGITATOR
TYPE: DYNAMIX NMX6-40-5
SIZE: 9449 mm LG SHAFT C/W (2) 1499 mm DIA.
DYNAFLOW SPLIT HUB IMPELLERS
MOTOR: 3.7 kW @ 1750 RPM, 460V/3Ø/60Hz, TEFC
SEVERE DUTY C/W SPACE HEATER

NOTES:
1. LALL TO BE LOCATED ABOVE HEATING BUNDLE AND AGITATOR MIXING BLADES.
2. TEMPERATURE GAUGE TO BE POSITIONED IN ORDER THAT IT IS VISIBLE FOR TRUCKING PERSONELL LOCATED AT ENVIROBOX.
3. BOTTOM OF MANWAY TO BE AT APPROXIMATE ELEVATION OF NOZZLE CONNECTION N2.
4. REQUIRED TANK LEVEL TO ALLOW TRUCK-OUT OF RESIDUE WITHOUT RESULTING IN LOW LEVEL ALARM IN RESIDUE TANK. CALCULATION IS BASED ON TRUCK OUT VOLUME OF 56 m3 (350 BBL).
5. FUTURE DIESEL RUNDOWN, TERMINATING NEAR TK-0220.
6. TEMPORARY DIESEL TANK CONNECTION.

HOLDS:

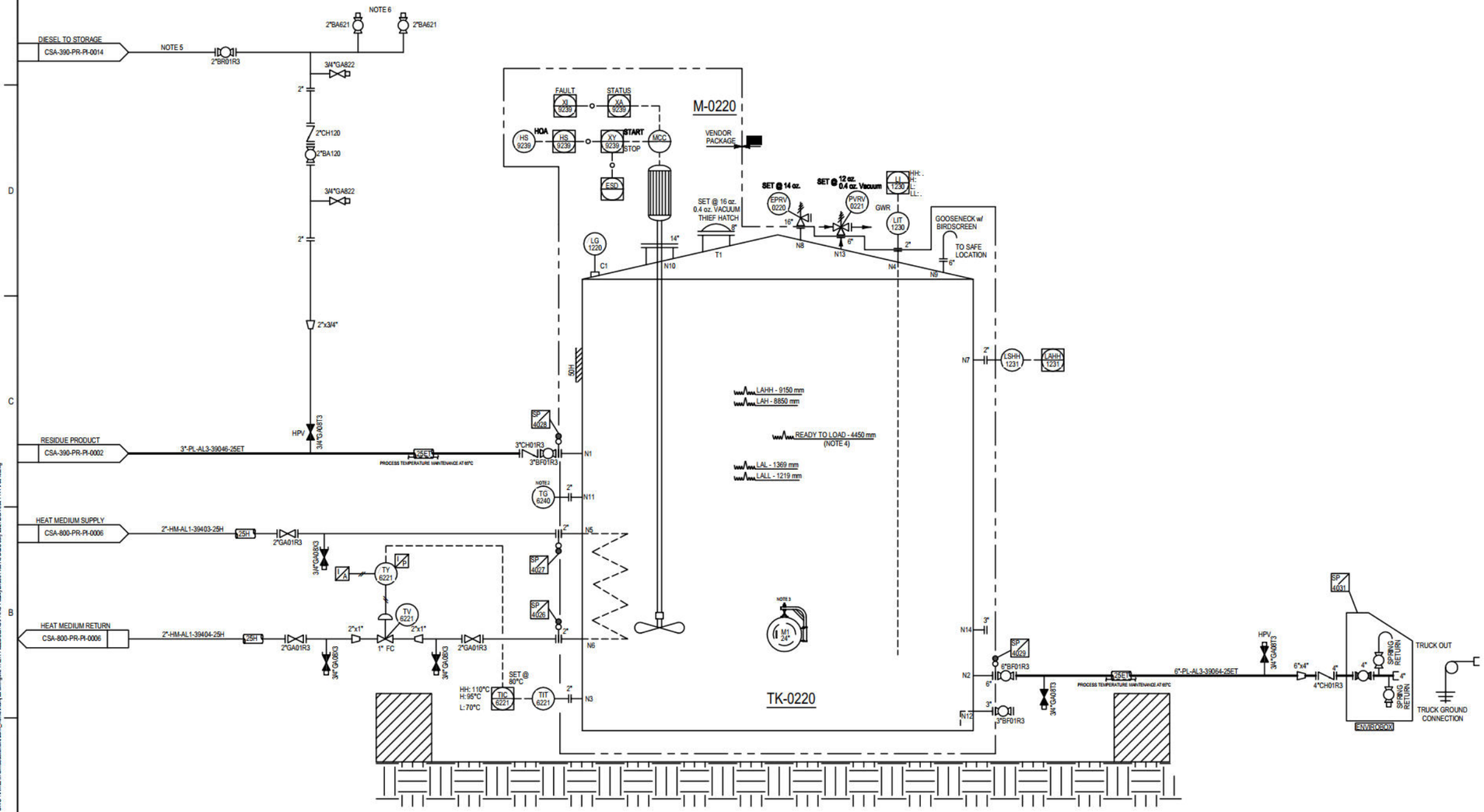

PRINTED: Thursday, August 19, 2021 12:41:50 PM DWG NAME: I:\Non_local\share\RDU_home\Insp1\Drawings\OTHER FIELD\SB\CYPAC Facility\Costa Frac Ave Build\ July 2021\CSA-39E-PR-PI-0001.dwg

UPDATED: Tuesday, May 2, 2023 12:42:19 PM BY: HEbit

TK-0290
PH - NEUTRALIZER TANK
TYPE: ATMOSPHERIC TANK
DESIGN: ATM,
CAPACITY: 0.76 m3 (200 GALLON)
CHEMICAL: NALCO EC1495A

TK-0295
H2S SCAVENGER TANK
TYPE: ATMOSPHERIC TANK
DESIGN: ATM,
CAPACITY: 0.76 m3 (200 GALLON)
CHEMICAL: NALCO EC5492A

P-0290
PH - NEUTRALIZER INJECTION PUMPS
MODEL: SIRIUS COMET
TYPE: POSITIVE DISPLACEMENT
DESIGN: 758 kPag @ 70°C/-40°C
CAPACITY: 300 L/day MAXIMUM / 4.9 L/day TARGET
MOTOR: 0.25 kW, 120 V/1Ø/60Hz

P-0295
H2S SCAVENGER INJECTION PUMPS
MODEL: SIRIUS COMET
TYPE: POSITIVE DISPLACEMENT
DESIGN: 1586 kPag @ 70°C/-40°C
CAPACITY: 300 L/day MAXIMUM / 11.4 L/day TARGET
MOTOR: 0.25 kW, 120 V/1Ø/60Hz

P-0290S (NOTE 1)
CHEMICAL INJECTION FLUID END SPARE

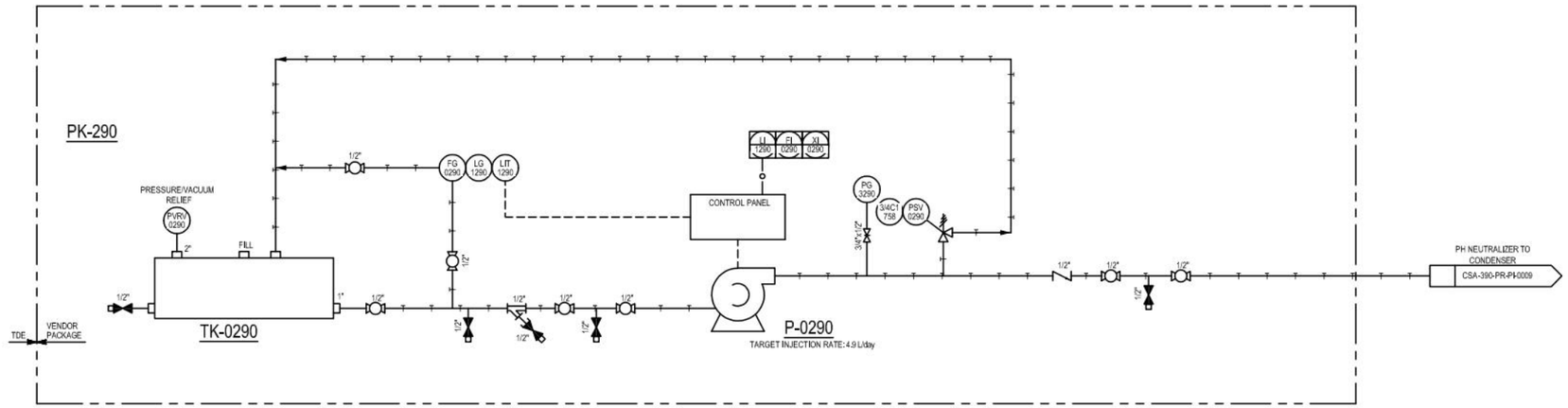

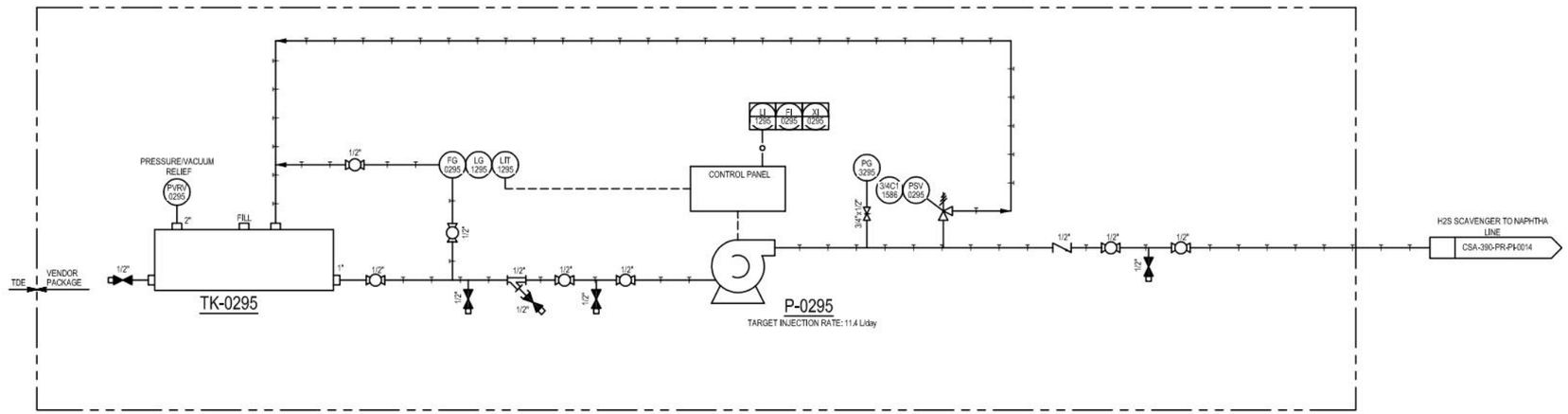

NOTES:
1. BOTH CHEMICAL INJECTION SERVICES UTILIZE THE SAME PUMP MODEL. WAREHOUSE SPARE PUMP CAN BE UTILIZED AS REPLACEMENT FOR EITHER OF THE SERVICES.

HOLDS:

[redacted]

PRINTED: Tuesday, May 9, 2023 11:08:46 AM DWG NAME: C:\Users\mbk\Desktop\Dwg\Rev_02-PI-20230329-390-PR-P4017.dwg

P-0220A/B

CRUDE FEED PUMP

TYPE: HORIZONTAL CENTRIFUGAL
MODEL: MABRE: ANSI 1X2-10 WPH-M196
DESIGN: 1724 kPag @ 93°C / -40°C
CAPACITY: 18.1 m3/hr @ 130 m HEAD
MOTOR: 15 kW @ 3600 RPM, 460 V / 3ф / 60 Hz, TEFC
SEAL SYSTEM: PLAN 7311
TRIM: AO3-57901A / AO3-57901B

SK-236 SKID LIMIT

QTY: 1
PCV
1/2"BR15T3
INSTRUMENT AIR
A1-1041-M38-PID
2"-IA-AL1-57201-N
2"x1"
1"BR15T3
LEVEL CONTROL SIGNAL FROM SALES OIL TANK
A1-1041-M38-PID
SALES OIL TANK
A1-1041-M38-PID
2"-PL-AO3-57003-N
NOTE 1
3/4"
2"CH01R3
2"BR01R3
3/4"GA08X3
MIN FLOW LINE
FV 0218
SIGNAL TO FV-0219
CSA-390-PR-PI-0003
LOW SELECT
SET @ 8.5 m3/hr
SET @ 14.7 m3/hr
FIC 0219
H: 20.0 m3/hr
L: 10.5 m3/hr
FIT 0219
FE 0219
FIC 0218
L: 8.2 m3/hr
FALL 0228
L: 8.0 m3/hr
FSLL 0228
SP 0228
FIT 0218
FE 0218
SP 5717
SP 5718
SP 5716
SP 5720
SP 5719
I.F.
3" 300#
1 1/2"
3/4"GA08I3
3"-PL-AO3-57002-N
(NOTE 3)
AIT 0201
BS&W
AI 0201
H: 0.100%
(NOTE 2)
DENSITY CORRECTION
SP 4053
SP 4054
2" 300#
3"x2"
3"x2"
3"BR01R3
3/4"GA08X3
CRUDE FEED TO SK-231
CSA-390-PR-PI-0001
SALES OIL TANK
A1-1041-M38-PID
NPS
4"-PL-AO3-57001-N
4"
4"CH01R3
PDG 3237A
PG 3237A
5-VALVE MANIFOLD
3/4"x1/2"NEB0M3
3/4"GA08X3
SP 5701
SP 5702
4"BR01R3
4"x2"
RS
(Ø3 STRAIGHT)
3"x2"
3"
1"
2"
3/4"GA08X3
MIN FLOW LINE
P-0220A
P-0220A-M
PG 3238A
3/4"x1/2"NEB0M3
SP 5703
3"CH01R3
3"BR01R3
MCC
STATUS
XA 9240
START
XY 9240
STOP
ESD
FAULT
XI 9240
HS 9240
HOA
HS 9240
PDG 3237B
PG 3237B
SP 5704
SP 5705
P-0220B
P-0220B-M
PG 3238B
SP 5706
XA 9241
XY 9241
XI 9241
HS 9241
SK-236 SKID LIMIT

NOTES:

1. TUBE FROM DRAIN SOURCES.
2. ALARM SETPOINT OF 0.100% IS INTENDED TO ALERT OPERATIONS OF BULK WATER CARRYOVER. NORMAL OPERATION IS TO BE LIMITED TO A MAXIMUM WATER CONTENT OF 0.025% IN THE FEED STREAM. MANUAL SAMPLING MAY BE REQUIRED TO ENSURE WATER CONTENT IS MAINTAINED IN PERMISSIBLE RANGE. THE 0.025% MAXIMUM IS BASED ON MAINTAINING SALT CONCENTRATION BELOW 10 PTB (POUNDS PER THOUSAND BARRELS). CALCULATION BASIS CONSIDERS 100,000 PPM(M) SALT CONTENT IN WATER / EMULSION. EXCEEDING THESE VALUES WILL RESULT IN EXCESSIVE SALT CONVERSION TO HYDROCHLORIC ACID IN FRACTIONATOR RESULTING IN CORROSION RATES EXCEEDING VALUES CONSIDERED IN DESIGN.
3. PIPING IS PROTECTED FROM OVERPRESSURE BY SYSTEM DESIGN (OPPSD). REFER TO CSA-000-PI-CC-0002 FOR CALCULATIONS.

HOLDS:

[redacted]

UPDATED: Friday, July 30, 2021 10:05:18 AM BY: rhall
PRINTED: Friday, July 30, 2021 10:05:07 AM DWG NAME: \\Farm Local\share\#DM_2\cmellick\Drawings\OTHER FIELDS\RIGPAC Facility\Quote Rev As-Built\ July 2021\CSA-000-PI-PA-0001.dwg

SK-238 SKID LIMIT

QTY: 6

PCV

1/2"BR15T3

INSTRUMENT AIR

A1-88270-212-PID

2"-IA-AL1-57202-N

2"x1"

1"BR15T3

DENSITY

DI 0220

FI 0220

FIT 0220

SP 0220

SP 5707

3/4"GA08T3

SP 5714

300# I.F.

ØØ

SP 5715

1/2"

3/4"

FE 0220

NOTE 2, 3

DIESEL

CSA-390-PR-PI-0014

2"-PL-AL3-39039-N

2"BR01R3

3/4"GA08T3

LPD

XYV 9211

XV 9211

ZIC 9211

ZIO 9211

ZSC 9211

ZSO 9211

2" FC

NOTE 1, 4

XYV 9212

XV 9212

ZIC 9212

ZIO 9212

ZSC 9212

ZSO 9212

2"CH01R3

2" FC

NOTE 1, 4

2"

2"-PL-AL3-57004-N

NOTE 1

DIESEL TO STORAGE

A1-1040-M113-PID

KEROSENE

CSA-390-PR-PI-0014

2"-PL-BL3-39031-N

2"BR03R3

DENSITY

DI 0221

FI 0221

FIT 0221

SP 0221

SP 5708

3/4"GA08T3

SP 5712

300# I.F.

ØØ

SP 5713

1/2"

3/4"

FE 0221

NOTE 2, 3

XYV 9213

XV 9213

ZIC 9213

ZIO 9213

ZSC 9213

ZSO 9213

2" FC

NOTE 1, 4

BL3 AL3

XYV 9214

XV 9214

ZIC 9214

ZIO 9214

ZSC 9214

ZSO 9214

2"CH03R3

2" FC

NOTE 1, 4

BL3 AL3

2"

2"-PL-AL3-57005-N

NOTE 1

KEROSENE TO STORAGE

A1-1040-M113-PID

XYV 9217

XV 9217

ZIC 9217

ZIO 9217

ZSC 9217

ZSO 9217

3"CH03R3

3" FC

NOTE 4

3"-150#

PL-1096-88.9-AL

NAPHTHA TO CONDENSATE TK-601B

A1-1041-M38-PID

DENSITY

DI 0222

FI 0222

FIT 0222

SP 0222

SP 5709

3/4"GA08T3

SP 5710

300# I.F.

ØØ

SP 5711

1/2"

3/4"

3"x2"

3"x2"

FE 0222

NOTE 2, 3

COMBINED NAPHTHA

CSA-390-PR-PI-0014

3"-PL-AL3-39023-N

3"BR01R3

3/4"GA08T3

LPD

XYV 9215

XV 9215

ZIC 9215

ZIO 9215

ZSC 9215

ZSO 9215

3" FC

NOTE 1, 4

3"

3"-PL-AL3-57006-N

NOTE 1

COMBINED NAPHTHA TO STORAGE

A1-1040-M113-PID

XYV 9216

XV 9216

ZIC 9216

ZIO 9216

ZSC 9216

ZSO 9216

2"CH01R3

3" FC

NOTE 1, 4

3"

3"-PL-AL3-57007-N

NOTE 1

OFF-SPEC PRODUCTS TO SALES OIL TANK

A1-1041-M38-PID

3/4"GA08T3

LPD

SK-238 SKID LIMIT

NOTES:

1. ANY BLOCK VALVE LOCATED DOWNSTREAM MUST BE CAR SEALED OPEN TO AVOID POTENTIAL FOR OVERPRESSURE OF 150# PIPING.
2. FUTURE CUSTODY TRANSFER CONSIDERATION.
3. PRODUCTION ACCOUNTING METERING OF OFF-SPEC AND SALES PRODUCTION TO BE DETERMINED BASED ON APPLICABLE FLOWPATH AS INDICATED BY OPEN AND CLOSED LIMIT SWITCHES ON DOWNSTREAM SWITCHING VALVES.
4. SALES AND OFF SPEC SWITCHING VALVES TO BE INTERLOCKED.

HOLDS:

[redacted]

UPDATED: Tuesday, May 9, 2023 11:25:27 AM BY: Hilal
PRINTED: Tuesday, May 9, 2023 11:33:20 AM DWG NAME: C:\Users\hilal.Desktop\BRC Cobia May 2023\CSA\57\CSA-PI-PL0052.dwg

UPDATED: Friday, July 30, 2021 12:29:04 PM BY: Hala

NOTES:

HOLDS:

A1-1041-M53-PD

6"

NP

8"-FL-AO3-80501-N

8"

FUTURE
PROVISION FOR
DESALTER SKID

PG
3244

3/4"-HZ-M5001-IG

SET @ 150 kPag

PCV
3224

FG
0224

1"GA08S3

1"GL08S3

AO3 | AL1

1"BR15T3

1"

1"BR15T3

2"x1"

LP FUEL GAS PURGE
CSA-800-PR-PI-0004

2"-FG-AL1-80301-N

3/4"GL08T3

8"

NP

8"-FL-AO3-39501-N

LP FLARE FROM SK-231
CSA-300-PR-PI0005

2"

AL1 | AO3

2"-FL-AL1-39504-N

LP FLARE FROM SK-232
CSA-300-PR-PI0012

6"

NP

6"-FL-AO3-39502-N

LP FLARE FROM CRUDE
FRACTIONATOR
CSA-300-PR-PI0007

4"

NP

4"-FL-AO3-39503-N

LP FLARE FROM SK-233
CSA-300-PR-PI0010

[redacted]

PRINTED: Friday, July 30, 2021 12:29:01 PM | DWG NAME: I:\Plan Jobs\Hala\EDM_Jobs\Hala\Drawings\OTHER FIELDS\BFD\PFA\CF Refill\Crude Rec 4a-Balls July 29\N12A-800-PFA-K001.dwg

UPDATED: Friday, July 30, 2021 12:43:31 PM BY: rhett

A1-104-M53-PID

2"

2"-DC-AO3-80601-25ET

2" FUTURE PROVISION FOR DESALTER SKID

3/4"GA08X3 HPV

2" 2"-DC-AO3-39601-25ET CLOSED DRAIN FROM SK-201 C9-300-PI-R-0003

3/4"GA08X3 HPV

2" AL3 AO3 2"-DC-AL3-39602-25ET CLOSED DRAIN FROM SK-202 C9-300-PI-R-0013

3/4"GA08X3 HPV

2" 2"-DC-AO3-39603-25ET CLOSED DRAIN FROM SK-203 C9-300-PI-R-0011

NOTES:

HOLDS:

[redacted]

PRINTED: Friday, July 30, 2021 12:45:30 PM DWG NAME: \\Iran.local\shared$\Old_Home\rhett\Drawings\OTHER FILES\P&ID\ROTAC Facility\Ovivo Rroc Avi Bulls July 2021\C9A-800-PI-R-0002.dwg

UPDATED:Friday, July 30, 2021 1:55:39 PM BY:rhall

A1-104-1-M49

2"

CRUDE FEED HEATER
CSA-300-PR-PA006

2"-IA-AL1-39205-N

2"-IA-AL1-80201-N

2" FUTURE
PROVISION FOR
DESALTER SKID

2"

2"-IA-AL1-39201-N

INSTRUMENT AIR TO SK-231
CSA-330-PR-PA001

2"

2"-IA-AL1-39202-N

INSTRUMENT AIR TO SK-232
CSA-330-PR-PA012

2"

2"-IA-AL1-39203-N

INSTRUMENT AIR TO SK-233
CSA-330-PR-PA011

NOTES:

HOLDS:

[redacted]

PRINTED:Friday, July 30, 2021 1:56:13 PM DWG NAME:\\Ramboisf\shared$\Dhi_Home\rhall\Drawings\OTHER FIELDS\RCYP\ACF Feafle\Acute Frac As-Built\ July 2021\CSA-A80-PHA-PA0003.dwg

UPDATED:Friday, July 30, 2021 1:11:08 PM BY: rhicks

A1-104-1-M37-PID

2"

2"SBV(R)

5 - VALVE MANIFOLD

1/2"-SA-6B1-S

1/2"-SA-6B1-S

1"-SA-6B1-S

FI 0223

FIT 0223

FE 0223

NOTE 1

2"-FG-AL1-80301-N

FUEL GAS TO CRUDE FEED HEATER CSA-360-PR-PI-0006

2"-FG-AL1-39305-N

2" FUTURE PROVISION FOR DESALTER SKID

2"-FG-AL1-39301-N

FUEL GAS TO SK-231 CSA-300-PR-PI-0004

2"-FG-AL1-39302-N

FUEL GAS TO SK-232 CSA-300-PR-PI-0012

2"-FG-AL1-39306-N

FUEL GAS TO SK-233 CSA-300-PR-PI-0011

2"-FG-AL1-80001-N

FLARE PURGE REGULATOR CSA-800-PR-PI-0001

NOTES:

1. ORIFICE PLATE REMOVED, METER REPLACED BY FE-0231.

HOLDS:

[redacted]

PRINTED:Friday, July 30, 2021 1:23:29 PM DWG NAME:\\Ramlocal\shares\EDM_Data\Work\Drawings\OTHER FIELDS\BFC\PFM\ACTive\By\Chuck Fine\As-Built\ July\CSA-800-PR-PI-0006.dwg

UPDATED:Friday, July 30, 2021 2:02:22 PM EST:rhall

A1-8827-913

A1-8827-913

3"

3"

3"-GL-AL1-80422-N

3"-GL-AL1-80421-N

3"

3"

3"

3"

3"

3"

3"

3"

2"

2"

2

UPDATED: Friday, July 30, 2021 23:51:17 PM BY: hkeil

A1-104-1-M46-PID

2"

A1-104-1-M46-PID

2"

2"-HM-AL1-80402-25H

25H

3/4"GK9BT3

RPV

2"

2"-HM-AL1-80401-25H

25H

3/4"GK9BT3

RPV

2"

25H

2"

2"-HM-AL1-39402-25H

HEAT MEDIUM FROM SK-233

CSA-300-PR-PI-0009

25H

2"

2"-HM-AL1-39401-25H

HEAT MEDIUM TO SK-233

CSA-300-PR-PI-0009

25H

2"

2"-HM-AL1-39404-25H

HEAT MEDIUM FROM ATMOSPHERIC RESIDUE TANK

CSA-300-PR-PI-0016

25H

2"

2"-HM-AL1-39403-25H

HEAT MEDIUM TO ATMOSPHERIC RESIDUE TANK

CSA-300-PR-PI-0016

NOTES:

HOLDS:

[redacted]

PRINTED: Friday, July 30, 2021 23:51:2 PM DWG NAME: N:\Non Jose\Revit\Old_Home\Revit Projects\Drawings\OTHER FIELD\R&R\CVR\AC Facility\Cruise Fnc Ae\Bulls July 2021\CSA-300-PR-PI-0009.dwg

UPDATED: Tuesday, August 3, 2021 1:18:54 PM BY: Hala

A1-1041-M16-PID

2"

2"-SL-AO3-80701-25ET

25E1

2"

3/4"GA08D3

DR

NP

2"-SL-AL1-80700-25ET

2"

25E1

2"

NP

2"

25E1

25E1

25E1

25E1

CSA-390-PR-PI-0015

2"-PG-AL1-39068-25H

25H

LPD

3/4"GA08T3

HPV

3/4"GA08T3

CSC

2"BR0IR3

2"BR0IR3

2"

2"-SL-AL1-39700-25ET

3/4"GA08X3

HPV

2"

2"-SL-AO3-39706-25ET

3/4"GA08X3

HPV

2"

2"-SL-AO3-39709-25ET

2"

2"-SL-AL1-39707-25ET

2"

2"-SL-AO3-39708-25ET

LP STEAM TO SK-232

CSA-390-PR-PA0013

STEAM CONDENSATE FROM SK-232

CSA-390-PR-PA0013

STEAM CONDENSATE TO FRACTIONATOR CONDENSER

CSA-390-PR-PA0009

LP STEAM TO SK-233

CSA-390-PR-PA0011

STEAM CONDENSATE FROM SK-233

CSA-390-PR-PA0011

NOTES:

HOLDS:

[redacted]

PRINTED: Monday, August 16, 2021 9:18:49 AM DWG NAME: Q:\Jacobs\ea\BDH_Jacobs\Revit\Drawings\OTHER FIELDS\BR\ROPRA C Facility\Chute Rac As-Built July 2021\CSA-390-PR-PA-0007.dwg

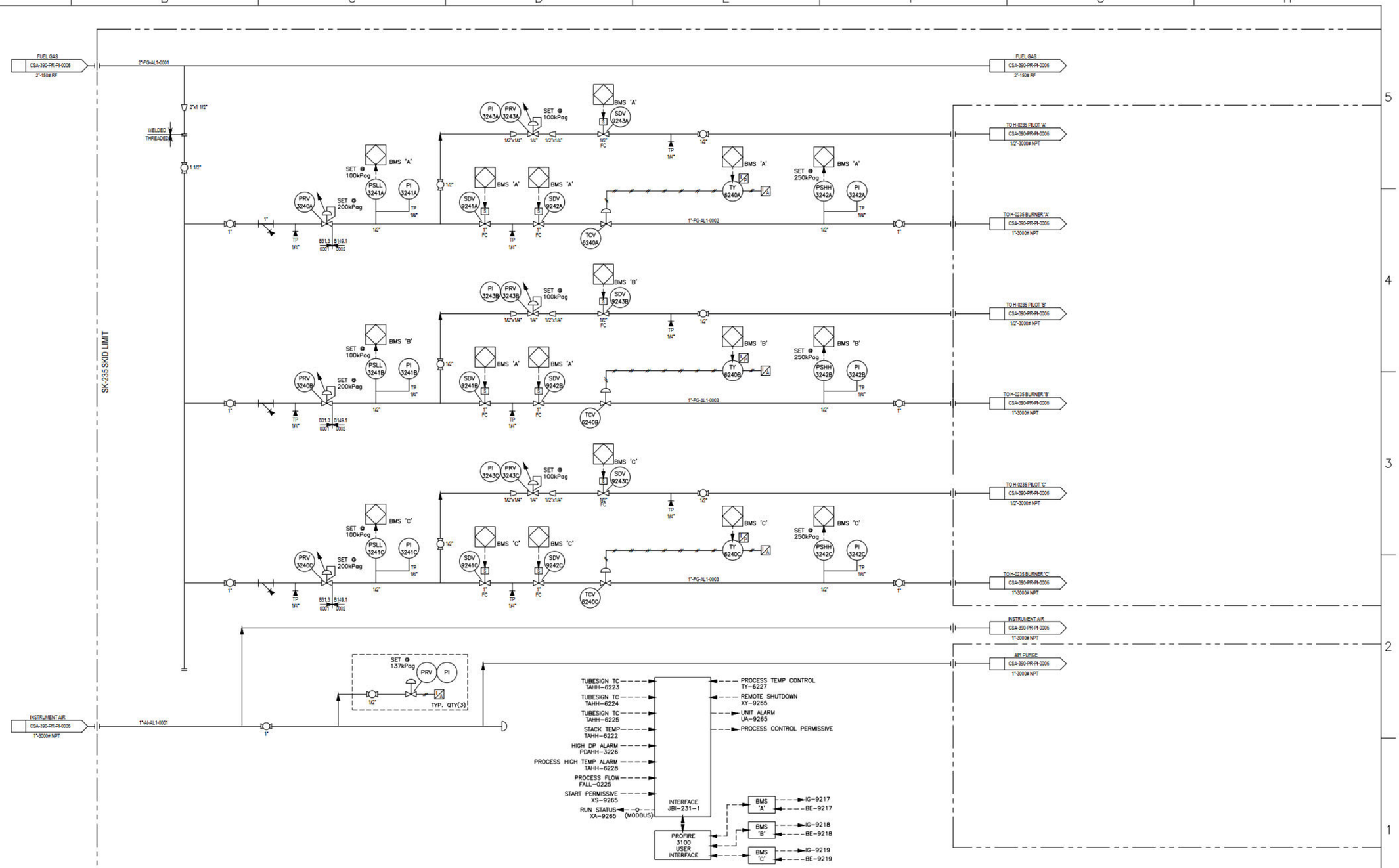

NOTES:

REV.	DATE: YY-MM-DD	BY	CHK'D DFTG	CHK'D ENG	APP'D PM	REVISION
0	20-04-01	DP		JF	EM	ISSUED FOR CONSTRUCTION (TE19GP0001)
1	20-04-03	DP		JF	EM	RE-ISSUED FOR CONSTRUCTION (TE19GP0001)
2	20-04-23	DP		JF	EM	REMOVED VENT LINE, RE-IFC (TE19GP0001)
3	20-05-20	DP		JF	EM	AS-BUILT (TE19GP0001)
4	20-05-26	DP		JF	EM	DELETED VENT NOTES AS-BUILT (TE19GP0001)
5	21-08-09	TH			SM	AS-BUILT

SEAL:

PERMIT:

[redacted]

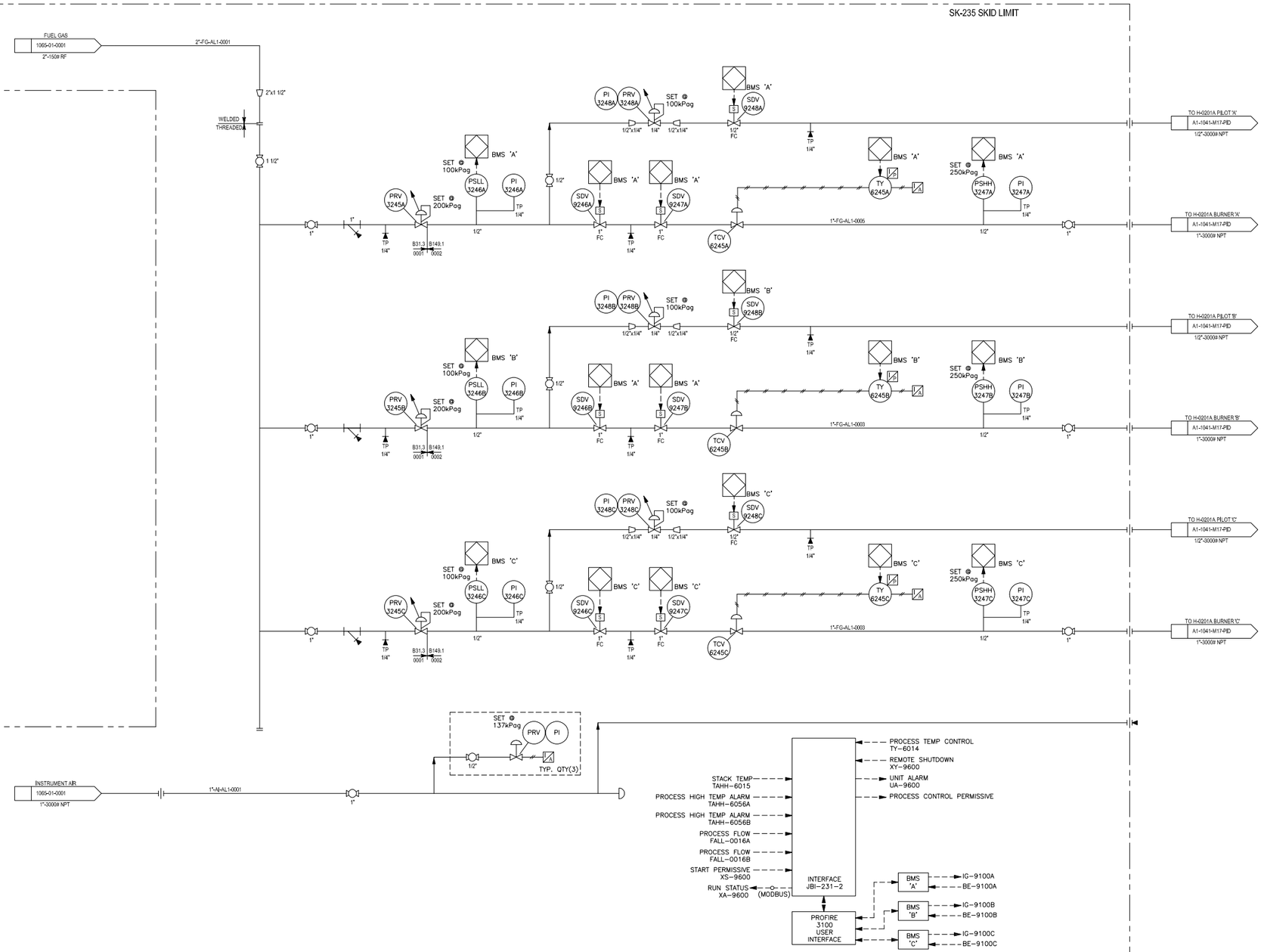

NOTES:

REV.	DATE: YY-MM-DD	BY	CHK'D DFTG	CHK'D ENG	APP'D PM	REVISION
0	20-04-01	DP		JF	EM	ISSUED FOR CONSTRUCTION (TE19GP0001)
1	20-04-03	DP		JF	EM	RE-ISSUED FOR CONSTRUCTION (TE19GP0001)
2	20-04-23	DP		JF	EM	REMOVED VENT LINE, RE-IFC (TE19GP0001)
3	20-05-20	DP		JF	EM	AS-BUILT (TE19GP0001)
4	20-05-26	DP		JF	EM	DELETED VENT NOTES AS-BUILT (TE19GP0001)
5	21-08-09	TH			SM	AS-BUILT
6	23-05-01	TH			SM	AS-BUILT

NOTES:
1. THREE 1/2" LOCKING BALL VALVES FOR PILOT TO BE SHIPPED LOOSE WITH THE PACKAGE FOR PLACEMENT CLOSE TO THE HEATER 0201B.

HOLDS:
1. TAG NUMBERS

FUEL GAS
CSA-390-PR-PI-0006
2"-CL 150 RF
TP 0001
2"-FG-AL1-0001
SKID LIMIT
1 1/2"-BF20TTB
1"-BF20TTB
PRV 3250A
SET @ 200 kPag
PSLL 3251A
PG 3251A
BMS 'A'
SET @ 100 kPag
TP 1/4"
1/2"
B31.3 0001
B149.1 0002
1"-FG-AL1-0002
PI 3253A
PRV 3253A
1/2"X1/4"
1/4"
SDV 9251A
SDV 9252A
FC
TY 6250A
TCV 6250A
TIC 6250A
PSHH 3252A
PG 3252A
NOTE 1
SDV 9253A
TP 0003
TO-H-201B PILOT 'A'
1/2"-CL 3000 NPT
TP 0004
TO-H-201B BURNER 'A'
1"-CL 3000 NPT
1"-FG-AL1-0003
PRV 3250B
PSLL 3251B
PG 3251B
PI 3253B
PRV 3253B
SDV 9251B
SDV 9252B
TY 6250B
TCV 6250B
TIC 6250B
PSHH 3252B
PG 3252B
SDV 9253B
TP 0005
TO-H-201B PILOT 'B'
TP 0006
TO-H-201B BURNER 'B'
1"-FG-AL1-0004
PRV 3250C
PSLL 3251C
PG 3251C
PI 3253C
PRV 3253C
SDV 9251C
SDV 9252C
TY 6250C
TCV 6250C
TIC 6250C
PSHH 3252C
PG 3252C
SDV 9253C
TP 0007
TO-H-201B PILOT 'C'
TP 8
TO-H-201B BURNER 'C'
INSTRUMENT AIR
CSA-390-PR-PI-0006
1"-CL 3000 NPT
TP 0002
1"-AI-AL1-0005
1/2"-BF20TTB
PRV
PI
(0-137kPag)
TY
TYP QTY(3)

TUBESKIN TC TAHH-6192
TUBESKIN TC TAHH-6193
PROCESS FLOW FALL-0011A
STACK TEMP TAHH-6016
PROCESS HIGH TEMP TAHH-6057A
PROCESS HIGH TEMP ALARM TAHH-6057B
PROCESS FLOW FALL-0011B
START PERMISSIVE XS-9601
RUN STATUS XA-9601 (MODBUS)
INTERFACE JBI-0201B
PROCESS TEMP CONTROL TY-6014B
REMOTE SHUTDOWN XY-9601
UNIT ALARM UA-9601
PROCESS CONTROL PERMISSIVE
PROFIRE 3100 USER INTERFACE
BMS 'A'
BMS 'B'
BMS 'C'
IG-9101A
BE-9101A
IG-9101B
BE-9101B
IG-9101C
BE-9101C

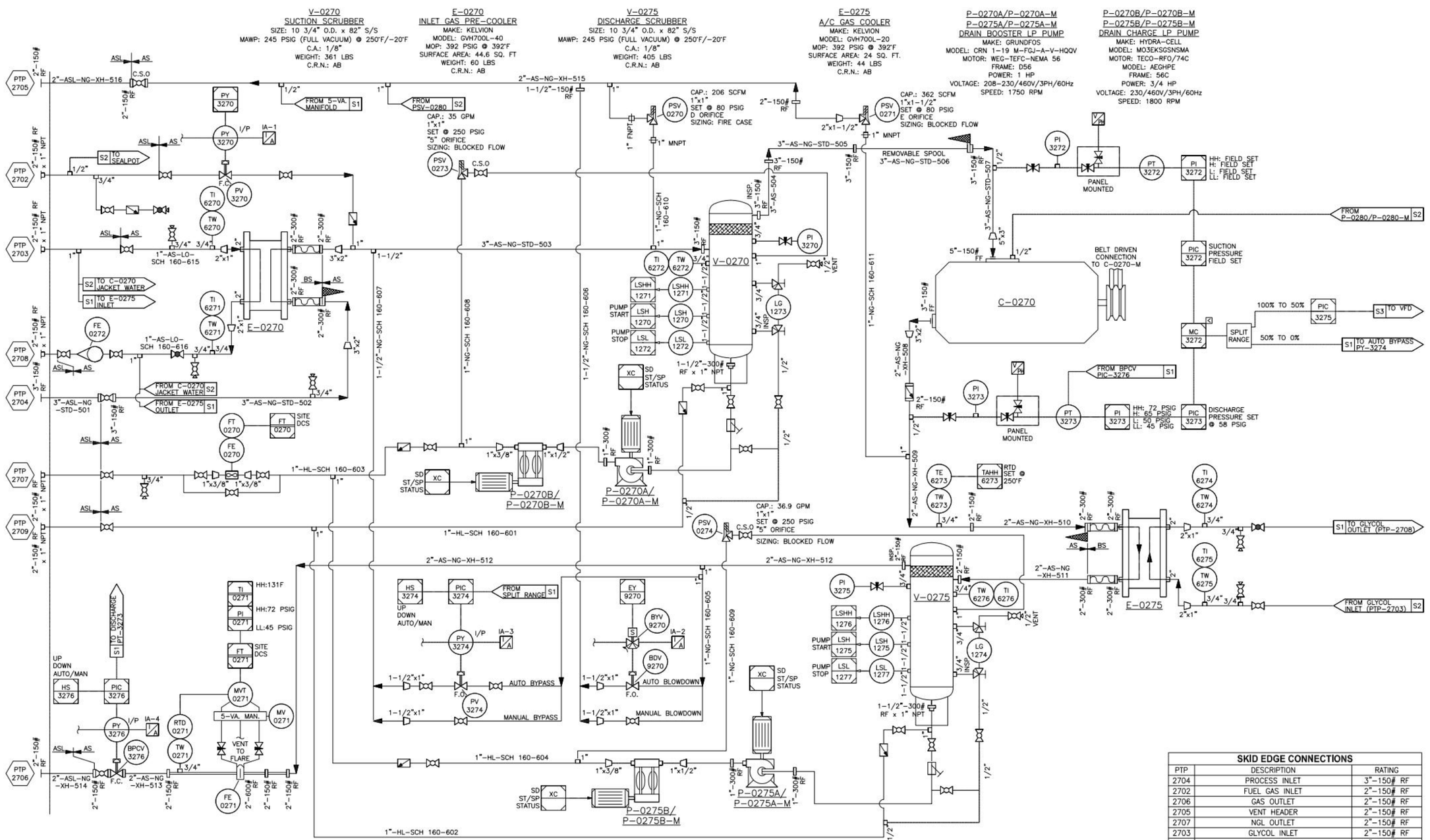

SKID EDGE CONNECTIONS		
PTP	DESCRIPTION	RATING
2704	PROCESS INLET	3"-150# RF
2702	FUEL GAS INLET	2"-150# RF
2706	GAS OUTLET	2"-150# RF
2705	VENT HEADER	2"-150# RF
2707	NGL OUTLET	2"-150# RF
2703	GLYCOL INLET	2"-150# RF
2708	GLYCOL OUTLET	2"-150# RF
2709	MANUAL SCRUBBER DRAIN	2"-150# RF

NOTES:
1. ALL PRESSURE PIPING SYSTEMS WELDED OR THREADED AND TUBING TO COMPLY WITH B31.3 EDITION (2018).
2. REFER TO NEXT STD PIPING SPEC. FOR RADIOGRAPHY REQ'S & MATERIALS.
3. ELECTRICAL CLASSIFICATION: CLASS 1, ZONE 2, GROUP IIA.
4. REFER TO PROJECT SPOOL DRAWINGS FOR WPS AND WELD DETAILS.
5. SPOOL DOWNSTREAM OF STRAINER TO BE PICKLED.

UNIT PLC SIGNAL | SKID MOUNTED DEVICE | PANEL VENT HEADER | OFFSKID SIGNAL TO/FROM DCS/MCC
UNIT PLC MOUNTED | VENT LOCALLY | VENT HEADER | VENT @ EAVE | PANEL AIR

REV.	DATE: YY-MM-DD	BY	CHK'D DFTG	CHK'D ENG	APP'D PM	REVISION
A	20-01-23	LN			CG	ISSUED FOR HAZOP
B	20-02-24	LN			CG	ISSUED FOR APPROVAL
0	20-03-05	LN			CG	ISSUED FOR CONSTRUCTION
1	20-03-31	LN			CG	REVISED BUILDING COLOURS, ADDED TI-0271 HH
2	20-06-29	LN			CG	AS-BUILT
3	20-07-14	LN			CG	FINAL AS-BUILT
4	21-07-29	TH			SM	AS-BUILT
5	23-05-01	TH			SM	AS-BUILT

SEAL:

PERMIT:

[redacted]

V-0280
SEALPOT FITTING
SIZE: 6 5/8" O.D. x 34" S/S
MAWP: 215 PSIG @ 350°F
MDMT: -20°F @ 215 PSIG
C.A.: 1/8"
WEIGHT: XX LBS
C.R.N.: AB

TK-0280
FRESH OIL TANK
CAPACITY: 20 US GAL

P-0280
LUBRICATOR
MANUFACTURER: CPI
PUMP MAWP: 3500 PSIG
PROX SWITCH: WHITLOCK DNFT-D-PRX

P-0281
OIL TRANSFER PUMP
MANUFACTURER: WILDEN
MODEL: GPS220/AAAA/XBS/ABN/0677

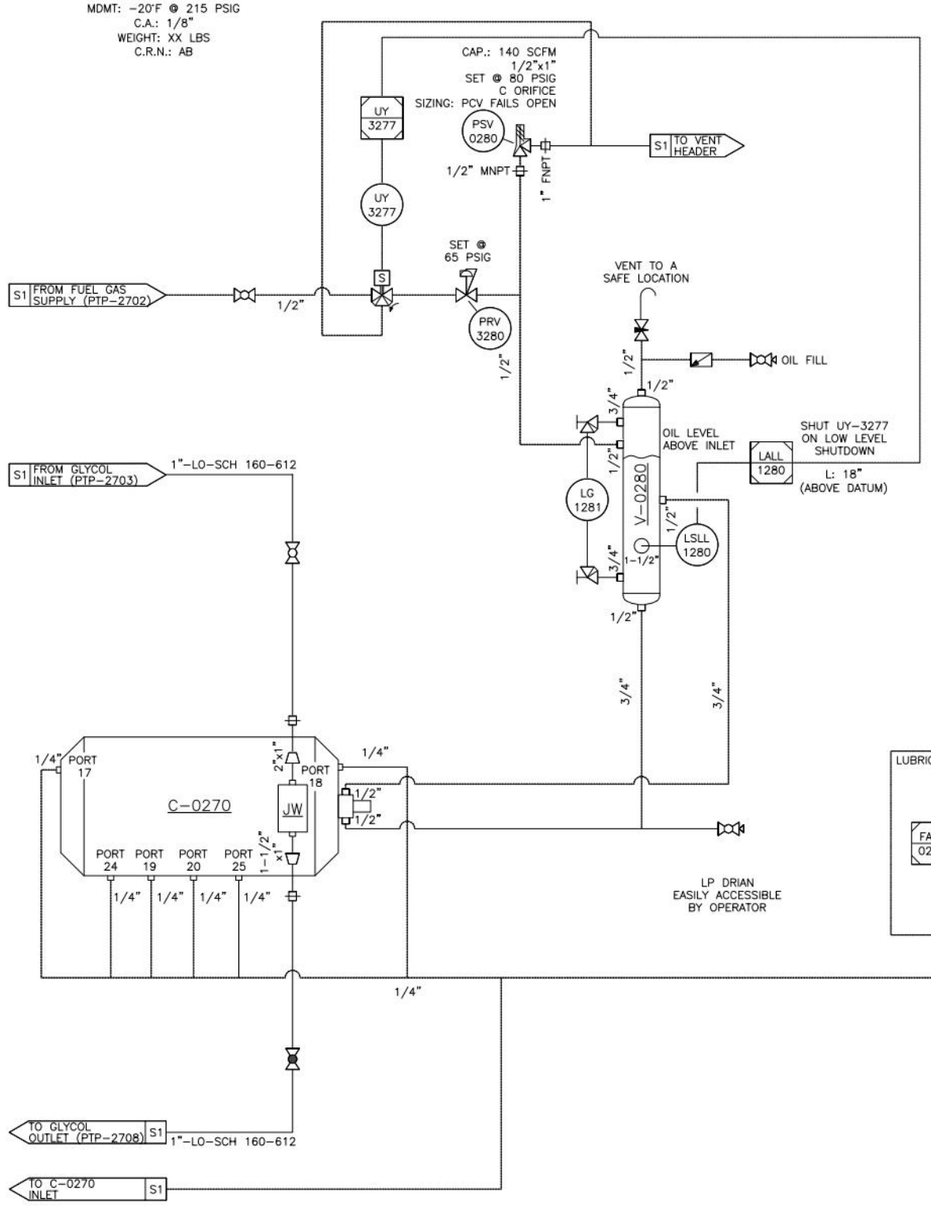

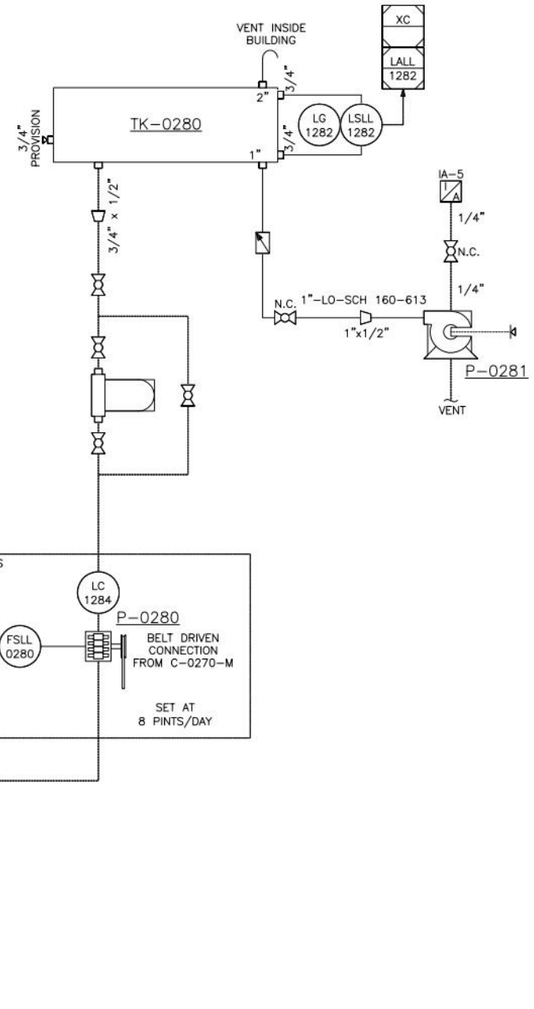

NOTES:
1. ALL PRESSURE PIPING SYSTEMS WELDED OR THREADED AND TUBING TO COMPLY WITH B31.3 EDITION (2018).
2. REFER TO NEXT STD PIPING SPEC. FOR RADIOGRAPHY REQ'S & MATERIALS.
3. ELECTRICAL CLASSIFICATION: CLASS 1, ZONE 2, GROUP IIA.
4. REFER TO PROJECT SPOOL DRAWINGS FOR WPS AND WELD DETAILS.

UNIT PLC SIGNAL | SKID MOUNTED DEVICE | V/PH PANEL VENT HEADER | OFFSKID SIGNAL TO/FROM DCS/MCC
UNIT PLC MOUNTED | V/L VENT LOCALLY | V/H VENT HEADER | V/E VENT @ EAVE | P/A PANEL AIR

REV.	DATE: YY-MM-DD	BY	CHK'D DFTG	CHK'D ENG	APP'D PM	REVISION
A	20-01-23	LN			CG	ISSUED FOR HAZOP
B	20-02-24	LN			CG	ISSUED FOR APPROVAL
0	20-03-05	LN			CG	ISSUED FOR CONSTRUCTION
1	20-03-31	LN			CG	REVISED BUILDING COLOURS, ADDED TI-0271 HH
2	20-06-29	LN			CG	AS-BUILT
3	20-01-27	LN			CG	FINAL AS-BUILT
4	21-07-29	TH			SM	AS-BUILT
5	23-05-01	TH			SM	AS-BUILT

SEAL:

[redacted]

EF-0270
BUILDING EXHAUST FAN
MAKE: SOPERS
MODEL: KL12XP1PH
FLOW: 1010 CFM
MOTOR: 115V/230V/1PH/60Hz
SPEED: 1800 RPM

BH-0270
BUILDING HEATER
MAKE: HAZLOC
MODEL: XEU1-20-250-480360-A-Y-B T1
TYPE: 20", 1/2 HP, EXP PROOF
NOMINAL KW: 25 KW
VOLTAGE: 480V/3P/60Hz
CLASS I & II, DIV. 1 & 2
WEIGHT: 274 LBS

PNL-C0270
CONTROL PANEL
MANUFACTURER: ALLEN-BRADLEY
MODEL: COMPACT LOGIX
POWER: 24 VDC
CLASS 1, DIV 2
HMI: 10.4"

C-0270
GAS COMPRESSOR
MANUFACTURER: ROFLO
MODEL: 211M
SPEED: 400-1000 RPM
MAWP: 80 PSIG @ 350°F
WEIGHT: 1425 LBS

C-0270-M
DRIVER
MAKE: TECO
MODEL: APH0408-841
VOLTAGE: 460V/3P/60Hz
MOTOR: 40 HP
SPEED RANGE: 400-900 RPM
WEIGHT: XXX LBS

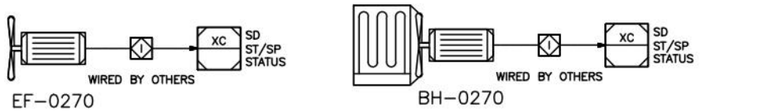

EF-0270

BH-0270

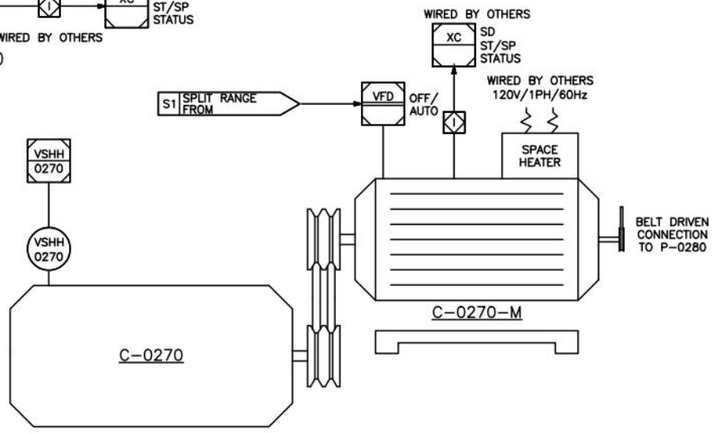

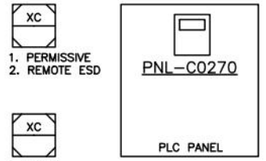

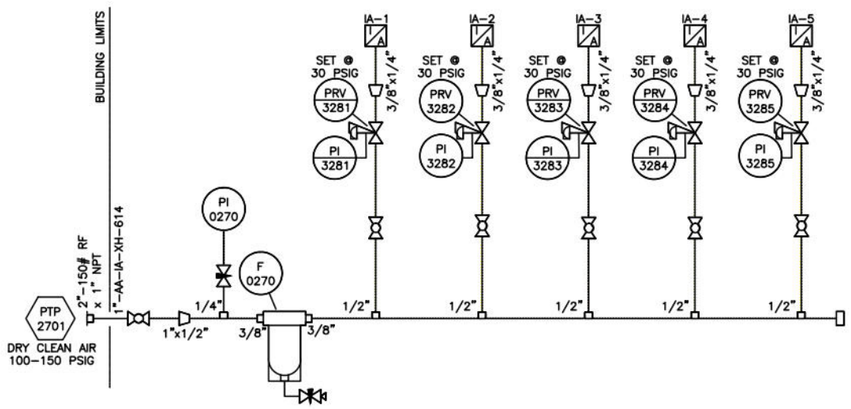

SKID EDGE CONNECTIONS

PTP	DESCRIPTION	RATING
2701	INSTRUMENT AIR	2"-150# RF

NOTES:
1. ALL PRESSURE PIPING SYSTEMS WELDED OR THREADED AND TUBING TO COMPLY WITH B31.3 EDITION (2018).
2. REFER TO NEXT STD PIPING SPEC. FOR RADIOGRAPHY REQ'S & MATERIALS.
3. ELECTRICAL CLASSIFICATION: CLASS 1, ZONE 2, GROUP IIA.
4. REFER TO PROJECT SPOOL DRAWINGS FOR WPS AND WELD DETAILS.

UNIT PLC SIGNAL · SKID MOUNTED DEVICE · PANEL VENT HEADER (V/PH) · OFFSKID SIGNAL TO/FROM DCS/MCC
UNIT PLC MOUNTED · VENT LOCALLY (V/L) · VENT HEADER (V/H) · VENT @ EAVE (V/E) · PANEL AIR (P/A)

REV.	DATE: YY-MM-DD	BY	CHK'D DFTG	CHK'D ENG	APP'D PM	REVISION
A	20-01-23	LN			CG	ISSUED FOR HAZOP
B	20-02-24	LN			CG	ISSUED FOR APPROVAL
0	20-03-05	LN			CG	ISSUED FOR CONSTRUCTION
1	20-03-31	LN			CG	REVISED BUILDING COLOURS, ADDED TI-0271 HH
2	20-06-29	LN			CG	AS-BUILT
3	20-01-27	LN			CG	FINAL AS-BUILT
4	21-07-29	TH			SM	AS-BUILT

SEAL:

[redacted]

BH–0270
BUILDING HEATER
BY COMPRESSOR VENDOR

EF–0270
EXHAUST FAN
BY COMPRESSOR VENDOR

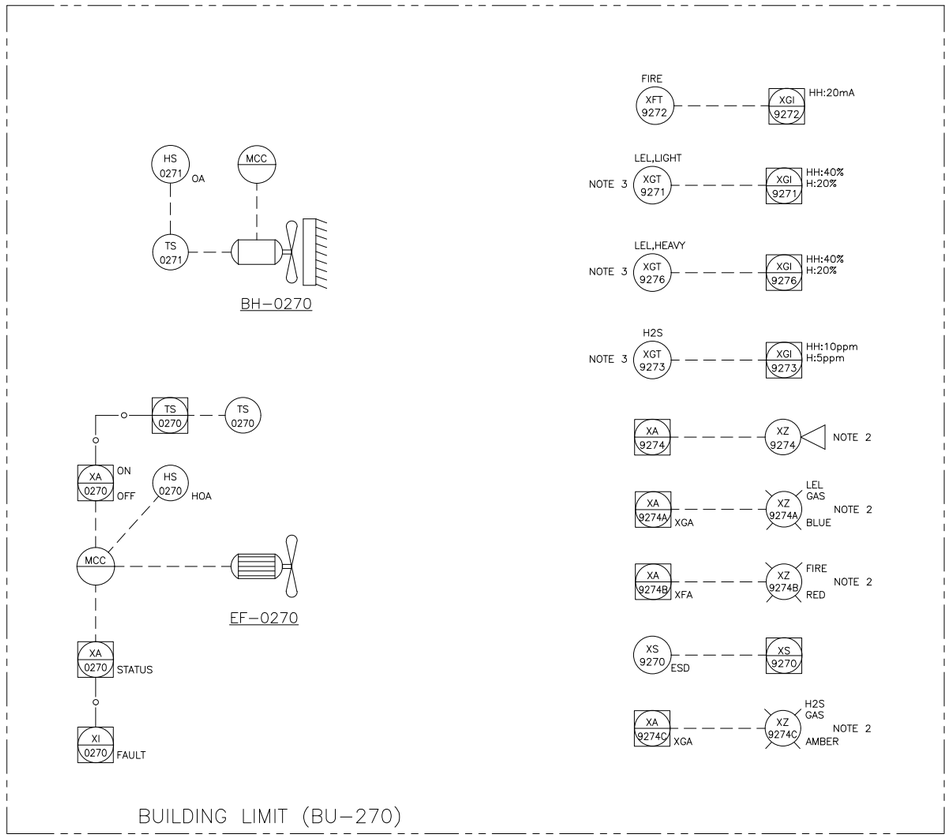

VRU COMPRESSOR BUILDING (PK–270)

NOTES:

1. ALL SHOWN INSTRUMENTS TO BE INSTALLED INSIDE BUILDING BESIDES THAT REQUIRED IN NOTES 2 AND 3.
2. TO BE LOCATED OUTSIDE BUILDING.
3. LEL AND H2S TRANSMITTER/DISPLAYS SHALL BE LOCATED OUTSIDE BUILDING.

REV.	DATE: YY–MM–DD	BY	CHK'D DFTG	CHK'D ENG	APP'D PM	REVISION
0	20–06–03	JC			JC	ISSUED FOR CONSTRUCTION (TW19GP0001)
1	21–07–29	TH			SM	AS–BUILT

SEAL:

[redacted]

[redacted]

[redacted]

E-0230

FEED/ DIESEL EXCHANGER

SIZE: 356 mm OD x 2962 mm TS/S
TYPE: TEMA BFU CLASS 'R'
DESIGN (TS): 1034 kPag @ 130°C/-40°C
(SS): 1379 kPag @ 343°C/-40°C
C.A. (TS/SS): 3.2 mm/3.2 mm
DUTY: 136 kW
TRIM (TS/SS): AO3-39903T/BL3-39903S

SK-231 SKID LIMIT

LP FLARE
CSA-390-PR-PI-0002

VAPOUR RECOVERY UNIT
CSA-390-PR-PI-0015

8"-FL-AO3-39501-N

LP FLARE
CSA-390-PR-PI-0004

FIRE
PSV 0231
1.5G3
1378
CAP.: 2,111 SCFM

TUBE RUPTURE
PSV 0230
1.5G3
1034
CAP.: 181 GPM
300#

PI 3208
HH: 931 kPag
H: 850 kPag

PIT 3208

SET @ 102°C
TIC 6215B
H: 125°C
L: 60°C

TIT 6215B

SIGNAL TO TV-6215A/B
CSA-390-PR-PI-0001

SIGNAL FROM FIT-0219
CSA-570-PR-PI-0001

ESD
XYV 0216
FY 0218
FV 0218

NOTE 4

PREFRACTIONATOR
A1-1041-M16-PID

3"-PL-AO3-39004-25H

NOTE 3
FRACTIONATOR FLASH DRUM
CSA-390-PR-PI-0004

3"-PL-AL3-39005-40H

FROM DIESEL PRODUCT PUMPS
CSA-390-PR-PI-0008

PG 3233
TG 6233

2"-PL-BL3-39037-40H

PG 3232
TG 6232

PG 3234
TG 6234

E-0230

CONDENSATE FROM FEED/RESIDUE EXCHANGER
CSA-390-PR-PI-0002

3"-PL-AO3-39003-25H

2"-PL-BL3-39038-25H

DIESEL TO RUNDOWN COOLER
CSA-390-PR-PI-0014

CLOSED DRAIN
CSA-390-PR-PI-0002

2"-DC-AO3-39601-25ET

CLOSED DRAIN
CSA-800-PR-PI-0002

CLOSED DRAIN FROM VRU
CSA-390-PR-PI-0015

SK-231 SKID LIMIT

V-0235
FRACTIONATOR FLASH DRUM
SIZE: 1524 mm ID x 3048 mm S/S
TYPE: VERTICAL 2 PHASE
DESIGN: 758 kPag @ 268°C/-40°C
C.A.: 3.2 mm
TRIM: AL3-39904

P-0235A/B
FRACTIONATOR FEED PUMPS
TYPE: RADIALLY SPLIT VERTICAL INLINE
MODEL: CPC G1 X 2 X 9 VP-CX (API OH4)
DESIGN: 1724 kPag @ 268°C/-40°C
CAPACITY: 15.3 m3/hr @ 91.4 m HEAD
MOTOR: 11 kW @ 3600 RPM, 460V/3Ø/60Hz, TEFC
SEAL SYSTEM: PLAN 23/52
TRIM: BL3-39905A/BL3-39905B

NOTES:
1. VALVE STEM TO BE ORIENTED HORIZONTALLY.
2. DELETED.
3. COOLING GLYCOL SUPPLY AND RETURN FOR PUMP SEAL COOLING.
4. PIPING IS PROTECTED FROM OVERPRESSURE BY SYSTEM DESIGN (OPPSD). REFER TO CSA-000-PI-CC-0002 FOR CALCULATIONS.
5. DELETED.
6. PROVISION FOR FUTURE C5+ TIE-IN CONNECTION.
7. STANDBY PUMP TO AUTO START ON LOSS OF RUN STATUS OF PRIMARY PUMP, AUTO START REQUIRED IN ORDER TO PREVENT COKING IN CRUDE FEED HEATER TUBES WHICH WOULD OCCUR IN THE EVENT OF LOSS OF FLUID FLOW THROUGH TUBES WITHOUT ALLOWING SUFFICIENT TIME FOR COOLING AFTER A HEATER SHUTDOWN.

HOLDS:

SK-231 SKID LIMIT
SK-232 SKID LIMIT
SK-232 SKID LIMIT

LP FLARE CSA-390-PR-PI-0003
8"-FL-AO3-39901-N
LP FLARE CSA-390-PR-PI-0005
LP FUEL GAS TO VRU CSA-390-PR-PI-0015
LP FUEL GAS CSA-800-PR-PI-0004
TO FRACTIONATOR CSA-390-PR-PI-0007
4"-PL-AL3-39011-25H
2"-FG-AL1-39301-N
3/4"-FG-BL1-39302-N

PREFRACTIONATOR LIQUID LEVEL CONTROLLER SIGNAL A1-1041-M16-PID
PRE-FRAC BYPASS CSA-390-PR-PI-0003
PREFRACTIONATOR BOTTOMS A1-1041-M16-PID
3"-PL-AL3-39005-40H
4"-PG-AL3-39009-25PP
3"-PL-AL3-39006-25H
4"-PG-AL3-39010-25H
2"-PL-AL3-39008-25PP
3"-PL-AL3-39005-40H
2"-PL-AL1-39007-25PP
3"-PL-BL3-39012-25H
3"-PL-BL3-39013-25H NOTE 4
3"-PL-BL3-39014-25H NOTE 4
3"-PL-BL3-39015-25H NOTE 4

V-0235 #4234

P-0235A
P-0235A-M
(NOTE 7)

P-0235B
P-0235B-M
(NOTE 7)

SIGNAL TO FIC-0224 CSA-390-PR-PI-0005
FEED TO FRACTIONATOR FEED/ RESIDUE EXCHANGER CSA-390-PR-PI-0005
LEVEL OVERRIDE FROM PREFRACTIONATOR REFLUX DRUM A1-1041-M18-PID LIC-1023B
NAPHTHA MAKE UP CSA-390-PR-PI-0010

LAHH-914 mm
LAH-762 mm
NLL-457 mm
LAL-305 mm
LALL-152 mm

PLAN 52
PLAN 23
PLAN 23/52

E-0235

FRACTIONATOR FEED / RESIDUE EXCHANGER

SIZE: 273 mm OD x 4267 mm TS/F
TYPE: TEMA AES CLASS 'R'
DESIGN (TS): 1379 kPag @ 399°C/-40°C
(SS): 1724 kPag @ 268°C/-40°C
C.A. (TS/SS): 0.0 mm/3.2 mm
DUTY: 220 kW
TRIM (TS/SS): BT0-39906T/BL3-39906S

NOTES:
1. VALVE STEM TO BE ORIENTED HORIZONTALLY.
2. PIPING IS PROTECTED FROM OVERPRESSURE BY SYSTEM DESIGN (OPPSD). REFER TO CSA-000-PI-CC-0002 FOR CALCULATIONS.

HOLDS:

SK-231 SKID LIMIT

LP FLARE
CSA-390-PR-PI-0004

8"-FL-AO3-39501-N

8"
LP FLARE
CSA-800-PR-PI-0001

25H N
BL3 AO3
FIRE
2H3 1724
PSV 0236
CAP.: 4075 SCFM
3"BF01R3 CSO
3"GA03R3 3"x2" CSO NOTE 1
25H N
BL3 AO3
1"GL08T3

SK-231 SKID LIMIT

SK-232 SKID LIMIT

3"

TIC-6227
CSA-390-PR-PI-0006

PG 3229
TI 6229
TIT 6229
3/4"x1/2"HEBM3
1 1/2"
3"CH03R3
LY 1204
LV 1204
3"x2"
3"GA03R3
3/4"GA08T3
3"-PL-BL3-39016-25H
FC
25ET LSH
AL3 BL3
2"GA03R3
2"GL03R3
3/4"GA08T3
HP?
FEED TO CRUDE HEATER
CSA-390-PR-PI-0006

PG 3230
SP 3227
2"GA03R5-T
1/2"GA08T5-T
TG 6230
1 1/2"
3/4"GA08T5-T
3/4"GA08T3
RESIDUE FROM STEAM SUPERHEATER
CSA-390-PR-PI-0013
3"-PL-BT0-39044-40ET
40ET
PROCESS TEMPERATURE MAY REACH 399°C @ 68°C

3"x2"
2"
RS
1"
3"
N2
50H
N3
N1
N4
E-0235
1"GL08T5-T

RSP
GI 0224
FIC 0224
H: 12000 kg/hr
L: 5500 kg/hr
BMS
AAL 0225
FALL 0225
LL: 8.5 m3/hr
FSLL 0225
3/4"
3/4"x1/2"HEBM3
PG 3228
TG 6228
1 1/2"
25H
PG 3231
SP 3226
2"GA03R5-T
1/2"GA08T5-T
TG 6231
1 1/2"

FRACTIONATOR FLASH DRUM LEVEL CONTROLLER, LIC-1204
CSA-390-PR-PI-0004

FIT 0224
FE 0224

FROM FRACTIONATOR FEED PUMP
CSA-390-PR-PI-0004

3"-PL-BL3-39015-25H
NOTE 2
3"x2"
2" 300#
2" 300#
3"x2"

RESIDUE TO FEED/ RESIDUE EXCHANGER
CSA-390-PR-PI-0002
3"-PL-BT0-39045-40ET
40ET
PROCESS TEMPERATURE MAY REACH 399°C @ 68°C

25ET 25H AL3 BL3
1"GA08T3
25ET 40ET AL3 BT0
1"GA08T5-T

2"
1"GA08T3
3/4"GA08T3
25ET
2"-DC-AL3-39602-25ET
CLOSED DRAIN
CSA-390-PR-PI-0012

SK-232 SKID LIMIT

H-0235
CRUDE FEED HEATER
MAKE/MODEL: TULSA HEATERS INC
OUTPUT: 2072 kW (7.07 MMBTU/hr)
TYPE: HORIZONTAL CABIN HEATER
COIL DESIGN: 1724 kPag @ 399°C/-40°C
CA.: 1.6 mm
NOTE: CHROME MATERIAL FOR COIL

PK-235
FUEL GAS PACKAGE

H-0235

NOTE 1
4" SC N8
1 1/2" C4A
1 1/2" C4B
1 1/2" C3
1 1/2" C5B
1"x1/2"
BMS TI 8222 HH: 350 °C H: 325°C
TIT 8222
3" N1
BMS ZT 8225 HH: 440 °C H: 420°C
1 1/2" C2A
1 1/2" C2C
TIT
TIT 8225
4" SC N7A
3" SC N7B
1/2"GA08T5-T
C7C 1 1/2"
TI 8226 H: 900°C
TIT 8226
C1 1 1/2"
1"NPT C5A
PDT 3226
BMS ZSH 3226 HH: 0.30" W.C.
1/2"GA08T5-T
PDT 3301
PDI 3301
3" N2
H65
3" N3
N5 3"
BLOCKED IN FIRED HEATER
2H3 1724
PSV 8237
CAP.: 4075 SCFM
4"x3" CSO 4"GA03R7-T
4"-PL-BP3-39067-40H
3"x2"
CSO 3"GA03R5
1/2"
3" R.S. NOTE 2
ESD
XY 9209
ZIC 9209
ZIO 9209
ZSC 9209
ZSO 9209
TG 8239
ESDV 9209
FEED FROM FRACTIONATOR FEED/ RESIDUE EXCHANGER
CSA-390-PR-PI-0005
3" FC
25H
1 1/2"
3"-PL-BL3-39016-25H
BMS ZT 8223 HH: 440°C H: 420°C
TIT 8224
C7A 1 1/2"
BMS ZT 8223 HH: 440°C H: 420°C
TIT 8223
C7B 1 1/2"
3" N4
RSP TIC 8227 H: 365°C
SET @ 375°C ZAH 8228 BMS
TIT 8227
SP 8230
SP 8231
TE 8228
1/2"
1 1/2"
3" GA03R5
3" 6"x3" 6" N6
R.S. NOTE 2
ESD
XY 9210
ZIC 9210
ZIO 9210
ZSC 9210
ZSO 9210
ESDV 9210
6" FC
25H
6"-PL-BP3-39017-65H
6"-PL-BP3-39066-65H
FEED TO CRUDE FRACTIONATOR
CSA-390-PR-PI-0007
C6A 1 1/2"
1"x1/2" 1/2"GA08T5-T
C6B 1 1/2"
1/2"GA08T5-T
BMS IG 9217
BMS BE 9217
BURNER "A"
BMS IG 9218
BMS BE 9218
BURNER "B"
BMS IG 9219
BMS BE 9219
BURNER "C"
1"-FG-AL1-39309-N
1/2"-FG-AL1-39312-N
1"-FG-AL1-39310-N
1/2"-FG-AL1-39313-N
1"-FG-AL1-39311-N
1/2"-FG-AL1-39314-N
100
FV 8227
DENSITY INDICATION FROM DI-0206B
CSA-390-PR-PI-0005
1191-0000-PR-PI-0001
INSTRUMENT AIR
CSA-800-PR-PI-0003
2"-IA-AL1-39205-N
BA-638 2"x1"
LP FUEL GAS
CSA-800-PR-PI-0004
2"-FG-AL1-39305-N
BA-130 2"
1191-0000-PR-PI-0001
NOTE 3
PCV 3250
PCV 3251
PCV 3252
1/2"BR15T3
1"BR15T3
1"-IA-AL1-39206-N
3"-FG-AL1-39315-N
TO SAFE LOCATION
XS 9265 START PERMISSIVE
XY 9265 REMOTE SHUTDOWN
XA 9265 RUN STATUS
UA 9265 UNIT ALARM
PROCESS CONTROL PERMISSIVE
PDI DIFFERENTIAL PRESSURE
TI TUBE SKIN
TI TUBE SKIN
TI TUBE SKIN
TI STACK TEMPERATURE
TI PROCESS TEMPERATURE

PK-235
REFERENCE DRAWINGS:
1065-10-PID-0001

NOTES:
1. DAMPER TO INCLUDE MECHANICAL STOP TO PREVENT FULL CLOSURE.
2. REMOVABLE SPOOL PROVIDED TO ALLOW LINE PIGGING.
3. PURGE AIR TO UV FLAME SCANNERS.

HOLDS:

[redacted]

T-0240
CRUDE FRACTIONATOR

SIZE: 1,524 mm ID x 27,432 mm S/S
TYPE: VERTICAL TOWER
DESIGN: 758 kPag/FV @ 399°C / -40°C
C.A.: 5.1 mm/ 0 mm
TRIM: BL3-39907/BT0-39908

NOTES:

1. FUEL GAS SUPPLY FROM TUBING TAKEN FROM SUPPLY HEADER ON SK-232.
2. PIPING IS PROTECTED FROM OVERPRESSURE BY SYSTEM DESIGN (OPPSD). REFER TO CSA-000-PI-CC-0002 FOR CALCULATIONS.
3. REMOVABLE SPOOL FOR FUTURE ESD VALVE.

HOLDS:

CASCADE TEMPERATURE SIGNAL TO FIC-0211 CSA-390-PR-PI-0010
SET @ 140°C
TIC 6204 HH: 170°C H: L: 100°C
TIT 6204
2" N15F
SP 3935
10" N3
300#
HP
SP 3982
10"
FIRE 3L4 758
PSV 6240
CAP.: 11,950 Nm³/h
B
6"x4"
6"BF01R3 CSO
NP
6"-FL-AO3-39002-N
LP FLARE CSA-800-PR-PI-0001
6"x3"
6"BF01R3 CSO
NOTE 1
1"GL08S3
10"-PG-AO3-39018-50H
TO FRACTIONATOR OVERHEADS CONDENSER CSA-390-PR-PI-0009
PI 3217
PIT 3217
HH: 200 kPag H: 85 kPag
SP 3937
2"GA03R3-T
1/2"GA08T3-T
SPARE 2" N20D
24" M1D MW
1
N19
SP 3981
2"GA03R3-T
PIT 3212D
PI 3212D
N16D
1/2"GA08T3-T
4"x3"
4" N10
3"-PL-AO3-39048-N
REFLUX FROM FRACTIONATOR REFLUX PUMPS CSA-390-PR-PI-0010
SP 3981
SP 3958
SIGNAL TO LV-1212 CSA-390-PR-PI-0008
TIC 6205
TIT 6205
2" N15E
8
N9
3"
SP 3959
3"
25H
3"-PG-AL3-39025-25H
VAPOR FROM KEROSENE STRIPPER CSA-390-PR-PI-0008
9
SP 3957
4" N8
25H
4"-PL-AL3-39024-25H
TO KEROSENE STRIPPER CSA-390-PR-PI-0008
HH
300#
150#
17
18
19
20
PDI 3213
SP 3930
6"x4"
6" N2
N15D
2"
TIT 6206
TI 6206
150#
300#
FEED FROM FRACTIONATOR FLASH DRUM CSA-390-PR-PI-0004
SP 3932
4"
4"-PL-AL3-39011-25H
25H
NP
TIC 6207
TIT 6207
2"
L: 280°C
21
N15C
SIGNAL TO LV-1213 CSA-390-PR-PI-0008
PROVISION FOR CORROSION COUPON
2"GA03R3-T
2" N20C
SP 3955
SP 3956
3"
40H
3"-PL-AL3-39032-40H
3/4"GA08T3 HPV
TO DIESEL STRIPPER CSA-390-PR-PI-0008
3/4"GA08T3 LPD
N6
SP 3941
N7
3"
300#
150#
OVERFLOW PIPE
2"GA03R5-T
PIT 3212C
PI 3212C
N16C
SP 3954
1/2"GA08T5-T
VAPOUR FROM DIESEL STRIPPER CSA-390-PR-PI-0008
SP 3933
3"
40H
3"-PG-AL3-39033-40H
24" M1C
N5
SP 4033
3"
3"x2"
40H
2"-PL-BL3-39040-40H
OVERFLASH FROM DIESEL STRIPPER CSA-390-PR-PI-0008
SS
CS
10H
PDI 3214
TI 6209
TIT 6209
2" N15B
SPARE 2" N20B
SP 3943
SP 3944
6"
N1
CR
SS
PROVISION FOR CORROSION COUPON
2"GA03R5-T
FEED FROM CRUDE FEED HEATER CSA-390-PR-PI-0006
3/4"GA08T5
SP 3934
6"
6"-PL-BP3-39006-65H
65H
NP
24" M1B MW
2"GA03R5-T
PIT 3212B
PI 3212B
N16B
1/2"GA08T5-T
SP 3952
PDI 3215
SPARE 2" N20A
SP 3951
2"GA03R5-T
PIT 3212A
PI 3212A
N16A
1/2"GA08T5-T
TI 6208
TIT 6208
2" N15A
LIT 1211 GWR
LIC 1211 HH: LL:
LEVEL SIGNAL TO FIC-0200 CSA-390-PR-PI-0002
3/4"GA08T3
SP 3945
2"GA03R3-T
2" N13
LP STEAM CSA-390-PR-PI-0013
2"-SL-BL1-39705-40ET
40ET
BL1
BT0
SP 3946
2"
MIN FLOW RECYCLE RESIDUE PRODUCT PUMP CSA-390-PR-PI-0012
2"-PL-BT0-39047-50ET
50ET
PROCESS TEMPERATURE MAINTAINED AT 68°C
N14
FG
NOTE 1
BTO
AL1
1/2"CH08T5
3/4"GA08T5-T
FG
NOTE 1
BTO
AL1
1/2"CH08T5
3/4"GA08T5-T
LIT 1210 GWR
HH: LL:
3"
N18B
2"GA03R5-T
CSO 2"GA03R5-T
N18A
25EL
LAHH-762 mm
LAH-610 mm
NLL-457 mm
LAL-305 mm
LALL-152 mm
24" M1A
N17B
2"
2"GA03R5-T
3/4"GA08T5-T
3/4"GA08T5-T
32EL
LG 1211 ET R
N17A
2"
2"GA03R5-T
3/4"GA08T5-T
3/4"GA08T5-T
32EL
N4
T-0240
#4233
3"
3/4"
3"-PL-BT0-39042-50ET (NOTE 2)
NP
50EL
PROCESS TEMPERATURE MAINTAINED AT 68°C
RS
NOTE 3
TO RESIDUE PUMPS CSA-390-PR-PI-0012

T-0245
DIESEL STRIPPER
SIZE: 457 mm OD x 6553 mm S/F
TYPE: VERTICAL PACKED TOWER
DESIGN: 758 kPag/FV @ 343°C / -40°C
C.A.: 3.2 mm
TRIM: AL3-39909

T-0250
KEROSENE STRIPPER
SIZE: 457 mm OD x 6553 mm S/F
TYPE: VERTICAL PACKED TOWER
DESIGN: 758 kPag/FV @ 232°C / -40°C
C.A.: 3.2 mm
TRIM: AL3-39910

P-0245A/B
DIESEL PRODUCT PUMPS
TYPE: RADIALLY SPLIT VERTICAL INLINE
MODEL: CPC S1 X 1.5 X 7 VP-CX)API OH4)
DESIGN: 1379 kPag @ 343°C/-40°C
CAPACITY: 2.4 m3/hr @ 30 m HEAD
MOTOR: 5.6 kW @ 3600 RPM, 460V/3Ø/60 Hz, TEFC
SEAL SYSTEM: PLAN 23/52
TRIM: BL3-39911A / BL3-39911B

P-0250A/B
KEROSENE PRODUCT PUMPS
TYPE: RADIALLY SPLIT VERTICAL INLINE
MODEL: CPC S2 X 3 X 13 VP-CX (API OH4)
DESIGN: 2276 kPag @ 232°C/-40°C
CAPACITY: 5.5 m3/hr @152 m HEAD
MOTOR: 22 kW @ 3600 RPM, 460V/3Ø/60 Hz, TEFC
SEAL SYSTEM: PLAN 23/52
TRIM: BL3-39912A / BL3-39912B

NOTES:
1. PIPING IS PROTECTED FROM OVERPRESSURE BY SYSTEM DESIGN (OPPSD). REFER TO CSA-000-PI-CC-0002 FOR CALCULATIONS.
2. EXTENSION SPOOL FOR PROBE TO SIT OUTSIDE VESSEL ID SO TURBULENT FLOW NEAR LIQUID OUTLET NOZZLE DOES NOT INTERFERE WITH THE PROBE'S ABILITY TO IDENTIFY LEVEL.

HOLDS:

SK-233 SKID LIMIT

VAPOR TO CRUDE FRACTIONATOR CSA-390-PR-PI-0007
LP FUEL GAS CSA-390-PR-PI-0010
CRUDE FRACTIONATOR KEROSENE STRIPPER DRAW CSA-390-PR-PI-0007
SIGNAL FROM TIC-6205 CSA-390-PR-PI-0007
FLOW CONTROLLER FIC-0213 CSA-390-PR-PI-0014
LP STEAM CSA-390-PR-PI-0013

T-0250 #4235
T-0245 #4236

P-0250A
P-0250A-M
P-0250B
P-0250B-M
P-0245A
P-0245A-M
P-0245B
P-0245B-M

KEROSENE TO FEED/KEROSENE EXCHANGER CSA-390-PR-PI-0001
OVERFLASH TO CRUDE FRACTIONATOR CSA-390-PR-PI-0007
DIESEL TO FEED/DIESEL EXCHANGER CSA-390-PR-PI-00[illegible]

AC-0255
FRACTIONATOR CONDENSER
MODEL: ALFA LAVAL E108-2-20
TYPE: HORIZONTAL FORCED DRAFT
DESIGN: 758 kPag/FV @ 204°C / -40°C
C.A.: 3.2 mm
DUTY: 2244 kW
TRIM: AO3-39913

AC-0255A/B-M
FRACTIONATOR CONDENSER MOTORS
DUTY: 22 kW @ 1750 RPM, 460 V/3Ø/60 Hz, TEFC

NOTES:
1. LOCATE AMBIENT AIR SENSOR DIRECTLY UNDER FAN WHERE AIR IS WELL MIXED.
2. CHEMICAL INJECTION THROUGH CUT THERMOWELL WITH INJECTION POINT POSITIONED IN CENTRE OF PIPE.
3. STEAM SYSTEM CONVERTED TO FUEL GAS (DESIGN CHANGE POST STARTUP). STEAM CONDENSATE SYSTEM NOT REQUIRED.

HOLDS:

PRODUCED WATER PUMPS
CSA-390-PR-PI-0011
1 1/2"-PW-AO3-39052-25ET
1 1/2"GA08S3

STEAM CONDENSATE
CSA-800-PR-PI-0007
2"-SL-AO3-39709-25ET
NOTE 3
25ET
2"BR01R3
CSC

CRUDE FRACTIONATOR
CSA-390-PR-PI-0007
3/4"GA08X3
FLUSH CONN.
NOTE 2
SP 6211
SP 6281
6"
50H
NP
10"-PG-AO3-39018-50H
TG 6209
1 1/2"

2"
1/2"BR15T3
1/2"BR15T3
MIN. 10 PSI CRACK. PRES.
1/2"GA07S-2
1/2"RES013

PH - NEUTRALIZER
CSA-390-PR-PI-0017

TY 6210
FC
FO
RECIRCULATION
AC-0255

SPLIT RANGE
SET @ 57°C
TIC 6210
H: 70°C
L: 35°C
0-50%
50-100%
TY 6210
17'-0"
6"
6"
6"
6"
3/4"GA08X3
3/4"GA08X3

HEAT MEDIUM SUPPLY
CSA-800-PR-PI-0006
2"
2"-HM-AL1-39401-25H
2"x1 1/2"
1 1/2"GA08S3
25H
1 1/2"x1"
1"
3/4"GA08X3

HEAT MEDIUM RETURN
CSA-800-PR-PI-0006
2"
2"-HM-AL1-39402-25H
2"x1 1/2"
1 1/2"GL08S3
25H
1 1/2"x1"
1"
3/4"GA08X3
3/4"GA08X3

VSHH 9226
VAHH 9226
AC-0255A-M
VSHH 9227
VAHH 9227
AC-0255B-M

TY 6211
FC
SET @ 15°C
TIC 6211
H: 45°C
L: 10°C
TY 6211
TIT 6211
NOTE 1

XI 9226
FAULT
MCC VFD
SY 9226
XA 9226
STATUS
XY 9226
ON
OFF
ESD
HS 9226
HOA
HS 9226

XI 9227
FAULT
MCC VFD
SY 9227
XA 9227
STATUS
XY 9227
ON
OFF
ESD
HS 9227
HOA
HS 9227

MANUAL

SK-233 SKID LIMIT

TG 6210
1 1/2"
TIT 6210
1 1/2"
10ET
6"-PL-AO3-39019-40ET NP
FRACTIONATOR REFLUX DRUM
CSA-390-PR-PI-0010

V-0255
FRACTIONATOR REFLUX DRUM
SIZE: 1219 mm ID x 3048 mm S/S
TYPE: HORIZONTAL 3-PHASE SEPARATOR
DESIGN: 758 kPag/ FV @ 93°C/-40°C
C.A.: 3.2 mm
TRIM: AO3-39914

P-0255A/B
FRACTIONATOR REFLUX PUMPS
TYPE: RADIALLY SPLIT VERTICAL INLINE
MODEL: CPC H1,5 X 3 X 7 VP-CX (API OH4)
DESIGN: 1586 kPag @ 93°C / -40°C
CAPACITY: 22,6 m3/hr @ 40 m HEAD
MOTOR: 7,5 kW @ 3600 RPM, 460 V / 3ϕ / 60 Hz, TEFC
SEAL SYSTEM: PLAN 14/ 52
TRIM: AO3-39915A / AO3-39915B

SK-233 SKID LIMIT

NOTES:
1. PIPING IS PROTECTED FROM OVERPRESSURE BY SYSTEM DESIGN (OPPSD). REFER TO CSA-000-PI-CC-0002 FOR CALCULATIONS.
2. CHECK VALVE WITH LOW CRACKING PRESSURE (<0,2 psi).
3. HEAT TRACE BOOT, BOTTOM 500 mm OF VESSEL AND BOTTOM 1/3 OF LEVEL BRIDLES FOR FREEZE PROTECTION.
4. DELETED.
5. LIGHT NAPHTHA ONLY TO BE UTILIZED FOR LIFT IN FRACTIONATOR WHEN PROCESSING SWEET CONDENSATE / CRUDE FEEDSTOCK.
6. PROVISION FOR CORROSION INHIBITOR INJECTION. CHEMICAL ADDITION NOT REQUIRED BASED ON COMPOSITIONS OUTLINED IN DESIGN BASIS.

HOLDS:

[redacted]

P-0260A/B

FRACTIONATOR PRODUCED WATER PUMPS

TYPE: WANNER: HYDRACELL H25EKSGHFHHB
DESIGN: 1724 kPag @93°C / 40°C
CAPACITY: 2.5 m3/hr @ 81 m HEAD
MOTOR: 1.5 kW @ 1800 RPM, 460V/3Ø/60Hz, TEFC
SEAL SYSTEM: SEAL-LESS
TRIM: AO3-39916 / AO3-39917

SK-233 SKID LIMIT

COOLING GLYCOL SUPPLY
CSA-800-PR-PI-0005
2"-GL-AL1-39422-N
NOTE 1
3/4"GA08T3

COOLING GLYCOL RETURN
CSA-800-PR-PI-0005
2"-GL-AL1-39423-25PP
NOTE 1
3/4"GA08T3

TYPICAL CONNECTION
QTY: 13
PCV
1/2"BR15T3

INSTRUMENT AIR
CSA-800-PR-PI-0003
2"-IA-AL1-39203-N
2"x1"
1"BR15T3

LP FUEL GAS
CSA-800-PR-PI-0004
2"-FG-AL1-39306-N
3/4" 3/4" 3/4"
2"x3/4"
3/4"BR15T3
3/4"-FG-BL1-39307-N
3/4"GA08T3
3/4"CH08T3
AL1 | BL1

FUEL GAS BLANKET
CSA-390-PR-PI-0010

STEAM CONDENSATE TO FRACTIONATOR CONDENSER
CSA-800-PR-PI-0007
2"
1"GA08X3
25EL1
2"-SL-AO3-39708-25ET
2"

UTILITY STATION
1"SL08T3
1"CH08T3
1"GA08T3
2"x1"
NP
3/4"CH08S3
3/4"GA08S3
T
SP 8001
3/4"GA08T3
AO3 | AL1
2"
2"-SL-AL1-39707-25ET
LP STEAM
CSA-800-PR-PI-0007

NOTES:
1. COOLING GLYCOL SUPPLY AND RETURN FOR P-0245A/B & P-0250A/B SEAL COOLING.

HOLDS:

LIC-1224
CSA-390-PR-PI-0010

FRACTIONATOR CONDENSER
CSA-390-PR-PI-0009
25EL1
1 1/2"-PW-AO3-39052-25ET

SET @ 800 kPag
PCV 3225
1 1/2"GA08S3
1 1/2"x1"
3/4"GA08S3
FE
DC
1"GL08S3
1"GA08S3

P-0260A
P-0260A-M

P-0260B
P-0260B-M

CSO
B
BLOCKED FLOW
PSV 0260
3/4C1724
CAP.: 44.6 GPM
1"GA08S3
1"x3/4"
1"GL08S3
1"GA08S3

PG 3260A
3/4"x1/2"NE60M3
3/4"GA08X3
SP 3988
1 1/2"CH08S3
1 1/2"GA08S3

SP 3993
SP 3994
150% 40 MESH
SP 3992
1"
RS 1-1/2" 1 1/2" (3Ø STRAIGHT)
1"
1 1/2"x1"
1 1/2"GA08S3
3/4"GA08X3

FAULT XI 9230
STATUS XA 9230
HOA
HS 9230
XY 9230
START
STOP
MCC
ESD

PG 3260B
3/4"x1/2"NE60M3
3/4"GA08X3
SP 3996
1 1/2"CH08S3
1 1/2"GA08S3

SP 3997
150% 40 MESH
SP 3995
1"
RS 1-1/2" 1 1/2" (3Ø STRAIGHT)
1"
1 1/2"x1"
1 1/2"GA08S3
3/4"GA08X3

FAULT XI 9231
STATUS XA 9231
HOA
HS 9231
XY 9231
START
STOP
MCC
ESD

1 1/2"-PW-AO3-39051-25ET

SP 0215
PG 0249
1 1/2"
3/4"GA08T3

FI 0226
H:0.7m3/hr
L:0.1m3/hr
FIT 0226
FE 0226
10Ø
5Ø

LY 1224
LV 1224
1 1/2"x1"
1 1/2"GA08S3
1" FC
3/4"GA08X3
3/4"GA08S3
FE
DC
1 1/2"GA08S3
1 1/2"GL08S3
3/4"GA08S3

2"x1 1/2"
2"
3/4"GA08X3
HH
25EL1
2"
SOUR WATER FLASH VESSEL
A0-1041-M90-PID

PRODUCED WATER FROM CRUDE FRACTIONATOR REFLUX DRUM
CSA-390-PR-PI-0010
1 1/2"-PW-AO3-39050-25ET
25EL1

SK-233 DRAIN SUMP
2"
2"GA01R3

CLOSED DRAIN
CSA-390-PR-PI-0010
2"-DC-AO3-39603-25ET
25EL1
2"BR01R3
CSO
3/4"GA08X3
CLOSED DRAIN
CSA-800-PR-PI-0002

SK-233 SKID LIMIT

[redacted]

P-0240A/B
RESIDUE PRODUCT PUMPS

TYPE: RADIALLY SPLIT VERTICAL INLINE
MODEL: CPC S1.5 X 3 X 7 VP-CX (API OH4)
DESIGN: 1379 kPag @ 399°C/-40°C
CAPACITY: 4.5 m3/hr @ 44 m HEAD
MOTOR: 5.6 kW @ 3600 RPM, 460V/3Ø/60Hz, TEFC
SEAL SYSTEM: PLAN 23/52
TRIM: BT0-39918A/BT0-39918B

NOTES:
1. PIPING IS PROTECTED FROM OVERPRESSURE BY SYSTEM DESIGN (OPPSD). REFER TO CSA-000-PI-CC-0002 FOR CALCULATIONS.
2. COOLING GLYCOL SUPPLY AND RETURN FOR PUMP SEAL COOLING.

HOLDS:

SK-232 SKID EDGE

P-0240A
P-0240A-M

P-0240B
P-0240B-M

INSTRUMENT AIR CSA-800-PR-PI-0003
COOLING GLYCOL SUPPLY CSA-800-PR-PI-0005
COOLING GLYCOL RETURN CSA-800-PR-PI-0005
LP FUEL GAS CSA-800-PR-PI-0004
MIN FLOW RECYCLE CSA-390-PR-PI-0007
RESIDUE PRODUCT CSA-390-PR-PI-0007
CLOSED DRAIN CSA-390-PR-PI-0005
LP FLARE CSA-800-PR-PI-0001
RESIDUE PRODUCT TO STEAM SUPERHEAT EXCHANGER CSA-390-PR-PI-0013
CLOSED DRAIN CSA-390-PR-PI-0013

2"-FL-AL1-39504-N VENT LINE FOR PUMP SEAL PLANS

PLAN 52 — SET @ 69 kPag — BUFFER LIQUID FILL — LOW CRACK PRES.
PLAN 23 — VENT — PUMP VENDOR TDE
RS (3Ø STRAIGHT)
TYPICAL CONNECTION QTY: 8

FT 0215 — FV 0215 — 1" FO
FIT 0215 — FIC 0215 — SET @ 0.6 m3/hr — FALL 0216 — FSLL 0216 — LEVEL SWITCH MANIFOLD
FE 0215 — INTEGRAL ORIFICE METER
FG 0240A — FG 0240B — RETURN GL

3"-PL-BT0-39043-50ET NOTE 1
2"-PL-BT0-39047-50ET
3"-PL-BT0-39042-25ET (NOTE 1)
2"-DC-AL3-39602-25ET
2"-GL-AL1-39420-N NOTE 2
2"-GL-AL1-39421-25PP NOTE 2
2"-FG-BL1-39304-N
2"-IA-AL1-39202-N
2"-FG-AL1-39303-N

PROCESS TEMPERATURE MAINTAINED AT 65°C

E-0240

STEAM SUPERHEATER EXCHANGER

SIZE: 324 mm OD x 3353 mm TS/S
TYPE: TEMA AGS CLASS 'R'
DESIGN: (TS): 1379 kPag @ 399°C / -40°C
(SS): 862 kPag @ 343°C / -40°C
C.A. (TS/SS): 0.0 mm / 1.6 mm
DUTY: 35 kW
TRIM (TS/SS): BT0-39919T / BL1-39919S

NOTES:

1. VALVE STEM TO BE ORIENTED HORIZONTALLY.
2. PIPING IS PROTECTED FROM OVERPRESSURE BY SYSTEM DESIGN (OPPSD). REFER TO CSA-000-PI-CC-0002 FOR CALCULATIONS.
3. ATMOSPHERIC RESIDUE SYSTEM FLUSH CONNECTION. FOR ADDITIONAL DETAIL REFERENCE NOTE 2 ON CSA-390-PR-PI-0002.
4. STEAM SYSTEM CONVERTED TO FUEL GAS (DESIGN CHANGE POST START UP)

HOLDS:

SK-232 SKID LIMIT

SUMMATION

SET @ 59 Sm3/hr
FIC 0212A H:75 Sm3/hr L: 35 Sm3/hr
SET @ 57 Sm3/hr
FIC 0212B H:75 Sm3/hr L: 35 Sm3/hr
SET @ 422 Sm3/hr
FIC 0212C H:525 Sm3/hr L: 250 Sm3/hr

FIT 0212A / FIT 0212B / FIT 0212C — 5 - VALVE MANIFOLD
FE 0212A / FE 0212B / FE 0212C — 10Ø / 5Ø
FV 0212A / FV 0212B / FV 0212C — 2" FC
ESD — XY 0212A / XY 0212B / XY 0212C

PI 3220 H:600 kPag L:250 kPag
PG 3220 / PIT 3220
TI 6220 H:330°C L:200°C
TG 6220 / TIT 6220 — 1 1/2"

CAP.: 259 GPM TUBE RUPTURE BL1 AL1
ZH 3 862 / PSV 0241 — C/W TEST LEVER
SP 4022 VENT TO SAFE LOCATION
3"-SL-AL1-39711-25ET
3"x2" — 3/4"GA08T3 — 3"GA03R3 CSO NOTE 1

ATMOSPHERIC RESIDUE FROM RESIDUE PRODUCT PUMPS
CSA-390-PR-PI-0012
3"-PL-BT0-39043-50ET NOTE 2
PROCESS TEMPERATURE MAINTENANCE @ 65°C
TG 6235 — 1 1/2"
FLUSH RETURN CONNECTION NOTE 3 — 1"GA03R3
SP 4020 — PG 3235 — 2"GA03R3-T — 1/2"GA08T5-T

3"-SL-BL1-39704-40ET — 2"GA03R3 PROVISION FOR CORROSION COUPON
3" RS N3 — 50H — N2 3"
3" RS N4 — N1 3"
1" — E-0240
3"-SL-BL1-39701-25ET

RESIDUE TO FRACTIONATOR FEED/RESIDUE EXCHANGER
CSA-390-PR-PI-0005
3"-PL-BT0-39044-40ET
PROCESS TEMPERATURE MAINTENANCE @ 65°C
SP 4019 — PG 3236 — 1/2"GA08T5-T — 2"GA03R3-T — TG 6236 — 1 1/2"

STEAM CONDENSATE TO FRACTIONATOR CONDENSER
CSA-800-PR-PI-0007
NOTE 4
2"-SL-AO3-39706-25ET — 2" 1"GA08X3
PG 3226 — 3/4"-1"ZNE60M3 — TG 6226 — 1 1/2" — 1"GA08T5 — AL3 BT0 25ET 40ET

2"-SL-AL1-39700-25ET
LP STEAM
CSA-800-PR-PI-0007
NOTE 4
SP 4015 — 2"CH03R3 — 2"GA03R3 — AL1 BL1
3"x2" — 3"x1" 1"GA08T3 — 1"GL08T3 UTILITY STATION FOR SK-231/232 — 1"CH08T3

3/4"GA08S3 3/4"CH08S3 T 3/4"GA08T3 — SP 4016 — SP 4017
AO3 BO3 BO3 BL1 — 3/4"-SL-BO3-39712-25ET
1"GA08T3 — 3/4"GA08T3

CLOSED DRAIN
CSA-390-PR-PI-0012
2"-DC-AL3-39602-25ET
SK-232 DRAIN SUMP — 2"GA01R3
2"BR01R3 — CSO — 3/4"GA08T3
CLOSED DRAIN
CSA-800-PR-PI-0002

SK-232 SKID LIMIT

2"GA03R3 — 3/4"GA08T3 — 1"GA08T3 — 1"GL08T3

LP STEAM TO KEROSENE STRIPPER
CSA-390-PR-PI-0008
NOTE 4
2"-SL-BL1-39703-40ET

LP STEAM TO DIESEL STRIPPER
CSA-390-PR-PI-0008
NOTE 4
2"-SL-BL1-39704-40ET

LP STEAM TO CRUDE FRACTIONATOR
CSA-390-PR-PI-0007
NOTE 4
2"-SL-BL1-39705-40ET

AC-0245
DIESEL COOLER
MODEL: ALFA LAVAL E90-2-21
TYPE: HORIZONTAL FORCED DRAFT
DESIGN: 1379 kPag @ 343°C / -40°C
C.A.: 3.2 mm
DUTY: 266 kW
TRIM: BL3-39920

AC-0250
KEROSENE COOLER
MODEL: ALFA LAVAL E90-2-21
TYPE: HORIZONTAL FORCED DRAFT
DESIGN: 2276 kPag @ 232°C / -40°C
C.A.: 3.2 mm
DUTY: 294 kW
TRIM: BL3-39921

AC-0260
NAPHTHA COOLER
MODEL: ALFA LAVAL E90-2-21
TYPE: HORIZONTAL FORCED DRAFT
DESIGN: 1586 kPag @ 93°C / -40°C
C.A.: 3.2 mm
DUTY: 90 kW
TRIM: AO3-39922

AC-0245-M
PRODUCT COOLER MOTORS
DUTY: 18 kW @ 1750 RPM, 460 V / 30 / 60 Hz, TEFC

NOTES:
1. SLOPE GRADING UNDERNEATH AIR COOLER TO PREVENT POOL FIRE.
2. PIPING IS PROTECTED FROM OVERPRESSURE BY SYSTEM DESIGN (OPPSD). REFER TO CSA-000-PI-CC-0002 FOR CALCULATIONS.
3. CHEMICAL INJECTION THROUGH CUT THERMOWELL WITH INJECTION POINT POSITIONED IN CENTRE OF PIPE.
4. FUTURE DIESEL OFFSPEC TIE-IN.
5. FUTURE DIESEL RUNDOWN IN PLANT 1.

HOLDS:

COMBINED NAPHTHA CSA-390-PR-PI-0010
KEROSENE PRODUCT CSA-390-PR-PI-0001
DIESEL PRODUCT CSA-390-PR-PI-0003
SK-231 SKID LIMIT
3"-PL-AO3-39022-N
2"-PL-BL3-39030-25H
NOTE 2
2"-PL-BL3-39038-25H
NOTE 2
NOTE 1
MANUAL
AC-0245
AC-0250
AC-0260
AC-0245-M
AC-0250-M
NOTE 2
3"-PL-AO3-39065-N
HIGH SELECT
0-50%
50-100%
SK-231 SKID LIMIT
NAPHTHA TO STORAGE CSA-570-PR-PI-0002
3"-PL-AL3-39023-N
H2S SCAVENGER CSA-390-PR-PI-0017
START UP CSA-390-PR-PI-0002
RESIDUE JUMPER
KEROSENE STRIPPER LEVEL CONTROLLER CSA-390-PR-PI-0008
KEROSENE TO STORAGE CSA-570-PR-PI-0002
2"-PL-BL3-39031-N
DIESEL STRIPPER LEVEL CONTROLLER CSA-390-PR-PI-0008
DIESEL TO STORAGE CSA-570-PR-PI-0002
2"-PL-AL3-39039-N
DIESEL TO STORAGE CSA-390-PR-PI-0016
NOTE 5
NOTE 4
MAXIMIZE
LOW SELECT

PK-270
VAPOUR RECOVERY UNIT

MAKE/MODEL: RO-FLO MODEL 211M
MOTOR: 30 kW @ 900 RPM, 460V/3Ø/60Hz, TEFC
TYPE: SINGLE STAGE VANE COMPRESSOR

NOTES:
1. SPARE LINE RUNNING NORTH-SOUTH BETWEEN SK-231 AND END OF [redacted] PIPERACK.

HOLDS:

SK-231 SKID LIMIT

PK-270 BUILDING LIMIT

SK-231 SKID LIMIT

INSTRUMENT AIR
CSA-390-PR-PI-0001
2"-IA-AL1-39204-N
VENDOR PACKAGE

LP FUEL GAS
CSA-390-PR-PI-0004
2"-FG-AL1-39308-N

COOLING GLYCOL SUPPLY
CSA-800-PR-PI-0005
2"-GL-AL1-39424-N

OFF-GAS FROM PRE-FRACTIONATOR
. A1-1041-M19-PID
3"-PG-AO3-39061-25ET
4"x3" NP

OFF-GAS FROM FRACTIONATOR
CSA-390-PR-PI-0010
4"-PG-AO3-39059-25ET

2"-FL-AO3-39505-N
LP FLARE
CSA-390-PR-PI-0003

PCV SET @ 250 kPag
PCV SET @ 225 kPag
PG
3/4"x1/2" HEBM1
2"BR01R3
2"CH01R3
1"GL08T3
1"BR15T3
2SH
2"PG-AO3-39062-25ET
25ET
A03 AL1
3/4"GA08T3
SAMPLE POINT
STEAM SUPERHEATER
CSA-800-PR-PI-0007
SP 0217
SP 4048
2"-PL-AO3-39063-N
1 1/2"
3/4"GA08X3
NGL TO CONDENSATE STABILIZER
A1-1041-M12-PID
NOTE 1
2"-GL-AL1-39425-25PP
COOLING GLYCOL RETURN
CSA-800-PR-PI-0005
2"-DC-AO3-39604-25ET
CLOSED DRAIN
CSA-390-PR-PI-0003

XY 9270 REMOTE ENABLE/ SHUTDOWN
XA 9270 RUN STATUS
UA 9270 GENERAL ALARM

PK-270
REFERENCE DRAWINGS:
101054-101 (CSA-270-PR-PI-0001 TO 0004)

TK-0220
ATMOSPHERIC RESIDUE STORAGE TANK
SIZE: 4724 mm OD x 9754 mm HIGH
TYPE: API 12F MODIFIED
DESIGN: 16 oz./0.5 oz. @ 121°C/-40°C
CAPACITY: 159 m3 (1000 BBL) NOMINAL
TRIM: AL3-9220

M-0220
ATMOSPHERIC RESIDUE TANK AGITATOR
TYPE: DYNAMIX NMX6-40-5
SIZE: 9449 mm LG SHAFT C/W (2) 1499 mm DIA.
DYNAFLOW SPLIT HUB IMPELLERS
MOTOR: 3.7 kW @ 1750 RPM, 460V/3Ø/60Hz, TEFC
SEVERE DUTY C/W SPACE HEATER

NOTES:
1. LALL TO BE LOCATED ABOVE HEATING BUNDLE AND AGITATOR MIXING BLADES.
2. TEMPERATURE GAUGE TO BE POSITIONED IN ORDER THAT IT IS VISIBLE FOR TRUCKING PERSONELL LOCATED AT ENVIROBOX.
3. BOTTOM OF MANWAY TO BE AT APPROXIMATE ELEVATION OF NOZZLE CONNECTION N2.
4. REQUIRED TANK LEVEL TO ALLOW TRUCK-OUT OF RESIDUE WITHOUT RESULTING IN LOW LEVEL ALARM IN RESIDUE TANK. CALCULATION IS BASED ON TRUCK OUT VOLUME OF 56 m3 (350 BBL).
5. FUTURE DIESEL RUNDOWN, TERMINATING NEAR TK-0220.
6. TEMPORARY DIESEL TANK CONNECTION.

HOLDS:

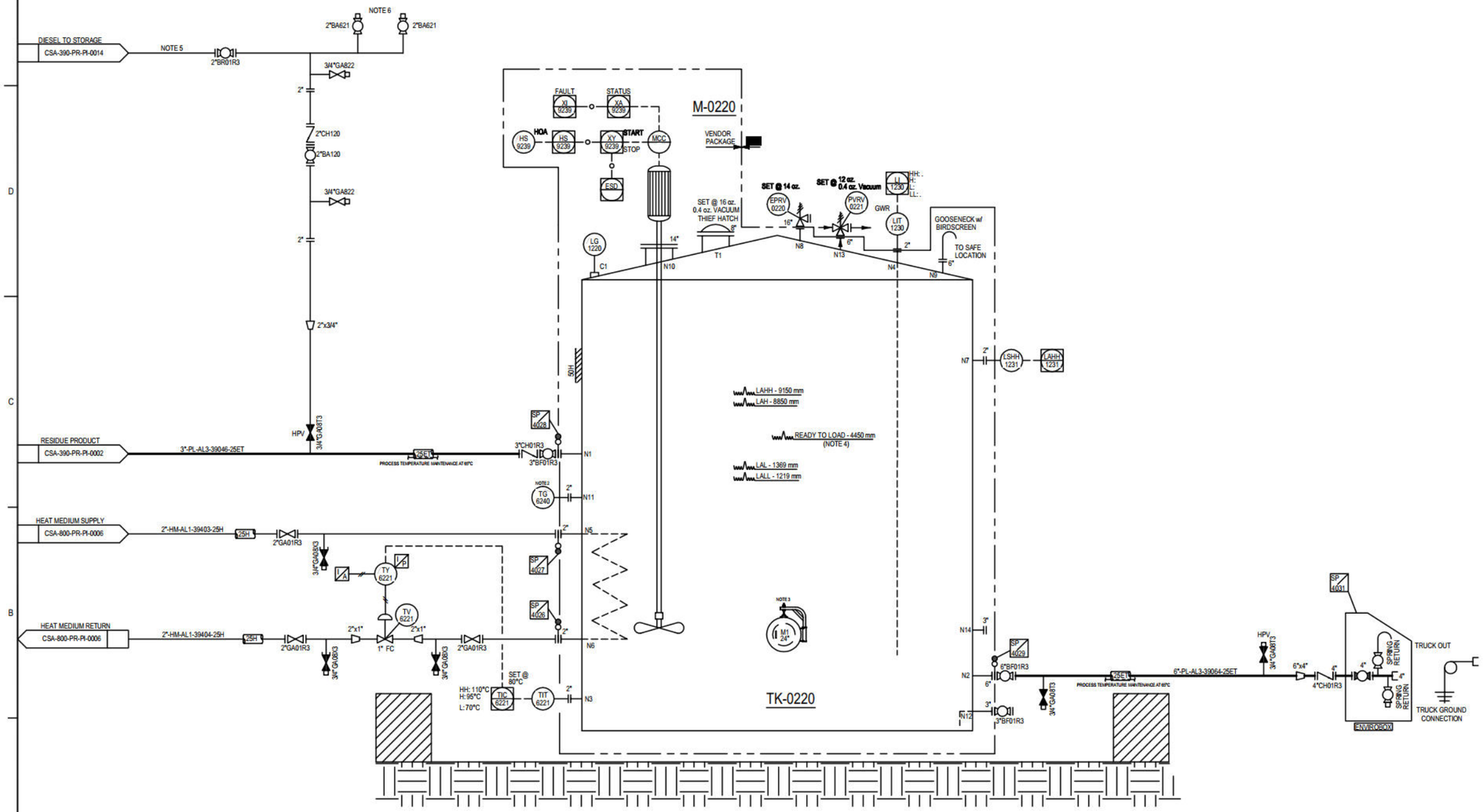

TK-0290
PH - NEUTRALIZER TANK
TYPE: ATMOSPHERIC TANK
DESIGN: ATM,
CAPACITY: 0.76 m3 (200 GALLON)
CHEMICAL: NALCO EC1495A

TK-0295
H2S SCAVENGER TANK
TYPE: ATMOSPHERIC TANK
DESIGN: ATM,
CAPACITY: 0.76 m3 (200 GALLON)
CHEMICAL: NALCO EC5492A

P-0290
PH - NEUTRALIZER INJECTION PUMPS
MODEL: SIRIUS COMET
TYPE: POSITIVE DISPLACEMENT
DESIGN: 758 kPag @ 70°C/-40°C
CAPACITY: 300 L/day MAXIMUM / 4.9 L/day TARGET
MOTOR: 0.25 kW, 120 V/1Ø/60Hz

P-0295
H2S SCAVENGER INJECTION PUMPS
MODEL: SIRIUS COMET
TYPE: POSITIVE DISPLACEMENT
DESIGN: 1586 kPag @ 70°C/-40°C
CAPACITY: 300 L/day MAXIMUM / 11.4 L/day TARGET
MOTOR: 0.25 kW, 120 V/1Ø/60Hz

P-0290S (NOTE 1)
CHEMICAL INJECTION FLUID END SPARE

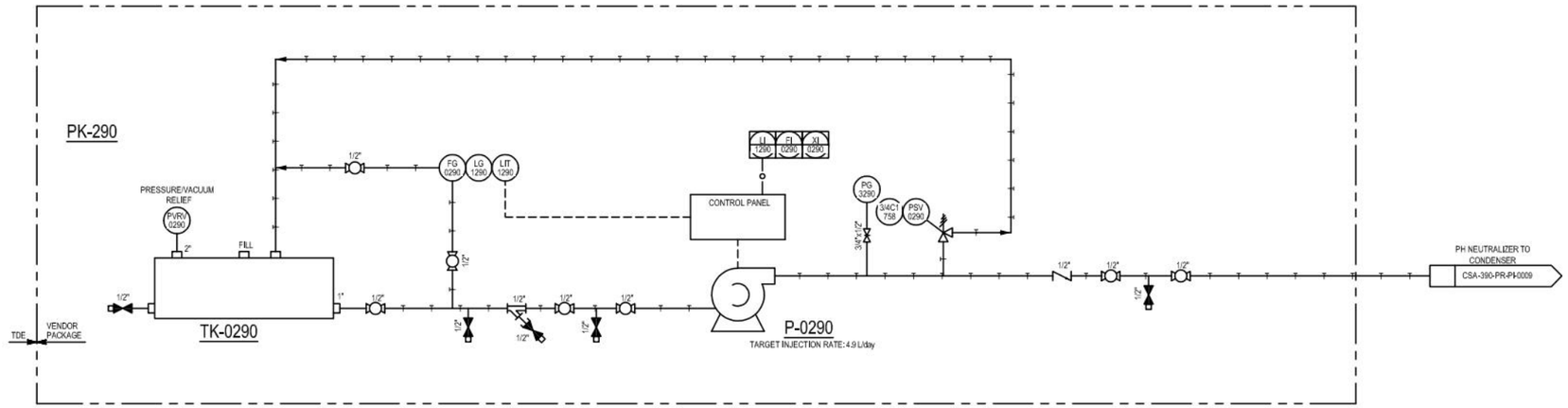

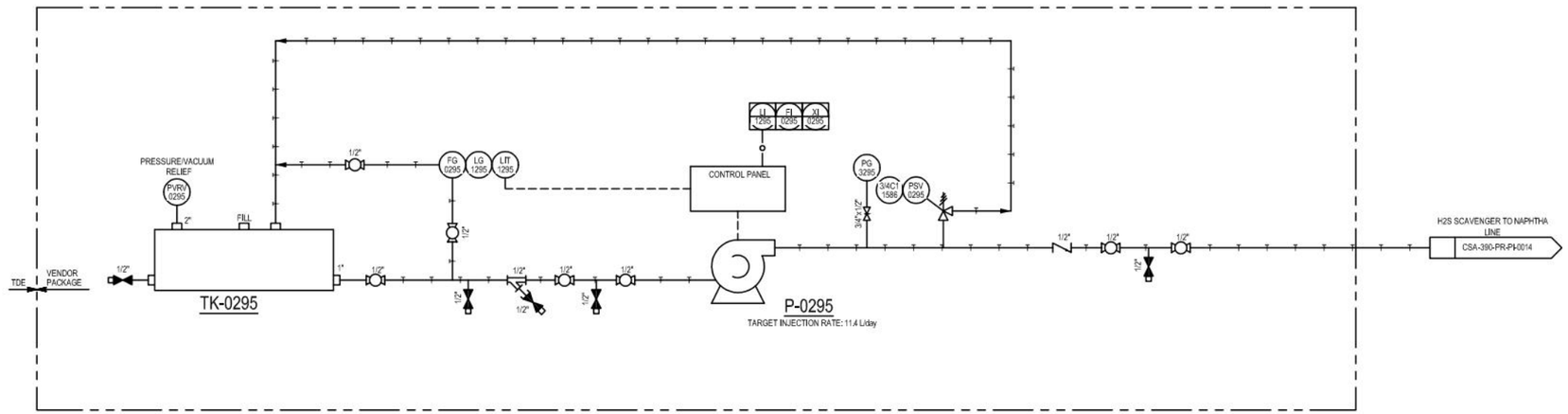

NOTES:
1. BOTH CHEMICAL INJECTION SERVICES UTILIZE THE SAME PUMP MODEL. WAREHOUSE SPARE PUMP CAN BE UTILIZED AS REPLACEMENT FOR EITHER OF THE SERVICES.

HOLDS:

[redacted]

P-0220A/B

CRUDE FEED PUMP

TYPE: HORIZONTAL CENTRIFUGAL
MODEL: MABRE: ANSI 1X2-10 WPH-M196
DESIGN: 1724 kPag @ 93°C / -40°C
CAPACITY: 18.1 m3/hr @ 130 m HEAD
MOTOR: 15 kW @ 3600 RPM, 460 V / 3ф / 60 Hz, TEFC
SEAL SYSTEM: PLAN 7311
TRIM: AO3-57901A / AO3-57901B

SK-236 SKID LIMIT

QTY: 1
PCV
1"ZBR15T3
INSTRUMENT AIR
A1-1041-M38-PID
2"-IA-AL1-57201-N
2"x1"
1"BR15T3
LEVEL CONTROL SIGNAL FROM SALES OIL TANK
A1-1041-M38-PID
SALES OIL TANK
A1-1041-M38-PID
2"-PL-AO3-57003-N
NOTE 1
3/4"
2"CH01R3
2"BR01R3
3/4"GA08X3
MIN FLOW LINE
FV 0218
2"x1"
LOW SELECT
SIGNAL TO FV-0219
CSA-390-PR-PI-0003
SET @ 8.5 m3/hr
FIC 0219
L: 8.2 m3/hr
SET @ 14.7 m3/hr
H: 20.0 m3/hr
L: 10.5 m3/hr
FAL 0228
L: 8.0 m3/hr
FSL 0228
SP 0228
FIT 0219
FIT 0218
FE 0219
FE 0218
SP 4053
SP 4054
SP 5717
SP 5718
SP 5716
SP 5720
SP 5719
I.F.
3" 300#
2" 300#
3"x2"
1 1/2"
3"BR01R3
AIT 0201
BS&W
H: 0.100%
(NOTE 2)
3"-PL-AO3-57002-N
(NOTE 3)
CRUDE FEED TO SK-231
CSA-390-PR-PI-0001
DENSITY CORRECTION
SALES OIL TANK
A1-1041-M38-PID
NPS
4"-PL-AO3-57001-N
4"CH01R3
PDG 3237A
PG 3237A
5-VALVE MANIFOLD
3/4"x1/2"NEXM3
3/4"GA08X3
SP 5701
SP 5702
4"BR01R3
4"x2"
RS (Ø3 STRAIGHT)
3"x2"
3"x1"
3/4"GA08X3
MIN FLOW LINE
P-0220A
P-0220A-M
MCC
STATUS
XA 9240
START
XY 9240
STOP
ESD
FAULT
XI 9240
HS 9240
HOA
HS 9240
PG 3238A
SP 5703
3"CH01R3
3"BR01R3
PDG 3237B
PG 3237B
SP 5704
SP 5705
P-0220B
P-0220B-M
XA 9241
XY 9241
XI 9241
HS 9241
PG 3238B
SP 5706
SK-236 SKID LIMIT

NOTES:

1. TUBE FROM DRAIN SOURCES.
2. ALARM SETPOINT OF 0.100% IS INTENDED TO ALERT OPERATIONS OF BULK WATER CARRYOVER. NORMAL OPERATION IS TO BE LIMITED TO A MAXIMUM WATER CONTENT OF 0.025% IN THE FEED STREAM. MANUAL SAMPLING MAY BE REQUIRED TO ENSURE WATER CONTENT IS MAINTAINED IN PERMISSIBLE RANGE. THE 0.025% MAXIMUM IS BASED ON MAINTAINING SALT CONCENTRATION BELOW 10 PTB (POUNDS PER THOUSAND BARRELS). CALCULATION BASIS CONSIDERS 100,000 PPM(M) SALT CONTENT IN WATER / EMULSION. EXCEEDING THESE VALUES WILL RESULT IN EXCESSIVE SALT CONVERSION TO HYDROCHLORIC ACID IN FRACTIONATOR RESULTING IN CORROSION RATES EXCEEDING VALUES CONSIDERED IN DESIGN.
3. PIPING IS PROTECTED FROM OVERPRESSURE BY SYSTEM DESIGN (OPPSD). REFER TO CSA-000-PI-CC-0002 FOR CALCULATIONS.

HOLDS:

SK-238 SKID LIMIT

INSTRUMENT AIR
A1-88270-212-PID
2"-IA-AL1-57202-N
2"x1"
1"BR15T3
QTY: 6
PCV
1/2"BR15T3

DENSITY
DI 0220
FI 0220
FIT 0220
SP 0220
SP 57014
SP 57015
3/4"GA08T3
1 1/2"
300# LF.
ØØ
1/2"
3/4"
FE 0220
NOTE 2, 3

DIESEL
CSA-390-PR-PI-0014
2"-PL-AL3-39039-N
2"BR01R3
3/4"GA08T3
LPD

XYV 9211
XV 9211
ZIC 9211
ZIO 9211
ZSC 9211
ZSO 9211
2" FC
NOTE 1, 4
XYV 9212
XV 9212
ZIC 9212
ZIO 9212
ZSC 9212
ZSO 9212
2"CH01R3
2" FC
NOTE 1, 4
2"
2"-PL-AL3-57004-N
NOTE 1
DIESEL TO STORAGE
A1-1040-M113-PID

DENSITY
DI 0221
FI 0221
FIT 0221
SP 0221
SP 57012
SP 57013
NOTE 2, 3

KEROSENE
CSA-390-PR-PI-0014
2"-PL-BL3-39031-N
2"BR03R3
XYV 9213
XV 9213
ZIC 9213
ZIO 9213
ZSC 9213
ZSO 9213
2" FC
NOTE 1, 4
BL3 AL3
XYV 9214
XV 9214
ZIC 9214
ZIO 9214
ZSC 9214
ZSO 9214
2"CH03R3
2" FC
NOTE 1, 4
BL3 AL3
2"-PL-AL3-57005-N
NOTE 1
KEROSENE TO STORAGE
A1-1040-M113-PID

XYV 9217
XV 9217
ZIC 9217
ZIO 9217
ZSC 9217
ZSO 9217
3"CH03R3
3" FC
NOTE 4
3"-150#
PL-1096-88.9-AL
NAPHTHA
TO CONDENSATE TK-601B
A1-1041-M38-PID

DENSITY
DI 0222
FI 0222
FIT 0222
SP 0222
SP 57008
SP 57010
SP 57011
1 1/2"
300# LF.
ØØ
3"x2"
1/2"
3/4"
FE 0222
NOTE 2, 3

COMBINED NAPHTHA
CSA-390-PR-PI-0014
3"-PL-AL3-39023-N
3"BR01R3
3/4"GA08T3
LPD

XYV 9215
XV 9215
ZIC 9215
ZIO 9215
ZSC 9215
ZSO 9215
3" FC
NOTE 1, 4
3"
3"-PL-AL3-57006-N
NOTE 1
COMBINED NAPHTHA TO
STORAGE
A1-1040-M113-PID

XYV 9216
XV 9216
ZIC 9216
ZIO 9216
ZSC 9216
ZSO 9216
2"CH01R3
3" FC
NOTE 1, 4
3"
3"-PL-AL3-57007-N
NOTE 1
OFF-SPEC PRODUCTS TO
SALES OIL TANK
A1-1041-M38-PID

SK-238 SKID LIMIT

NOTES:
1. ANY BLOCK VALVE LOCATED DOWNSTREAM MUST BE CAR SEALED OPEN TO AVOID POTENTIAL FOR OVERPRESSURE OF 150# PIPING.
2. FUTURE CUSTODY TRANSFER CONSIDERATION.
3. PRODUCTION ACCOUNTING METERING OF OFF-SPEC AND SALES PRODUCTION TO BE DETERMINED BASED ON APPLICABLE FLOWPATH AS INDICATED BY OPEN AND CLOSED LIMIT SWITCHES ON DOWNSTREAM SWITCHING VALVES.
4. SALES AND OFF SPEC SWITCHING VALVES TO BE INTERLOCKED.

HOLDS:

NOTES:

HOLDS:

A1-1041-M53-PD

6"

NP

8"-FL-AO3-80501-N

8"

FUTURE
PROVISION FOR
DESALTER SKID

PG
3244

3/4"-HF-M50-M3

SET @ 150 kPag

1"GA08S3

1"BR15T3

FG
0224

PCV
3224

2"x1"

LP FUEL GAS PURGE
CSA-800-PR-PI-0004

1"GL08S3

AO3 | AL1

1"

1"BR15T3

2"-FG-AL1-80301-N

3/4"GL08T3

8"

NP

8"-FL-AO3-39501-N

LP FLARE FROM SK-231
CSA-300-PR-PI-0005

2"

AL1 | AO3

2"-FL-AL1-39504-N

LP FLARE FROM SK-232
CSA-300-PR-PI-0012

6"

NP

6"-FL-AO3-39502-N

LP FLARE FROM CRUDE
FRACTIONATOR
CSA-300-PR-PI-0007

4"

NP

4"-FL-AO3-39503-N

LP FLARE FROM SK-233
CSA-300-PR-PI-0010

[redacted]

NOTES:

HOLDS:

A1-104-M53-PID

2"

2"-DC-AO3-80601-25ET

2" FUTURE PROVISION FOR DESALTER SKID

3/4"GA08X3

HPV

2"

2"-DC-AO3-39601-25ET

CLOSED DRAIN FROM SK-201

C9A-300-PR-R-0003

3/4"GA08X3

HPV

2"

AL3 AO3

2"-DC-AL3-39602-25ET

CLOSED DRAIN FROM SK-202

C9A-300-PR-R-0013

3/4"GA08X3

HPV

2"

2"-DC-AO3-39603-25ET

CLOSED DRAIN FROM SK-203

C9A-300-PR-R-0011

[redacted]

A1-104-1AM9

2"

2"-IA-AL1-80201-N

CRUDE FEED HEATER
CSA-300-PR-PA006

2"-IA-AL1-39205-N

2" FUTURE
PROVISION FOR
DESALTER SKID

2"

2"-IA-AL1-39201-N

INSTRUMENT AIR TO SK-231
CSA-330-PR-PA001

2"

2"-IA-AL1-39202-N

INSTRUMENT AIR TO SK-232
CSA-330-PR-PA012

2"

2"-IA-AL1-39203-N

INSTRUMENT AIR TO SK-233
CSA-330-PR-PA011

NOTES:

HOLDS:

[redacted]

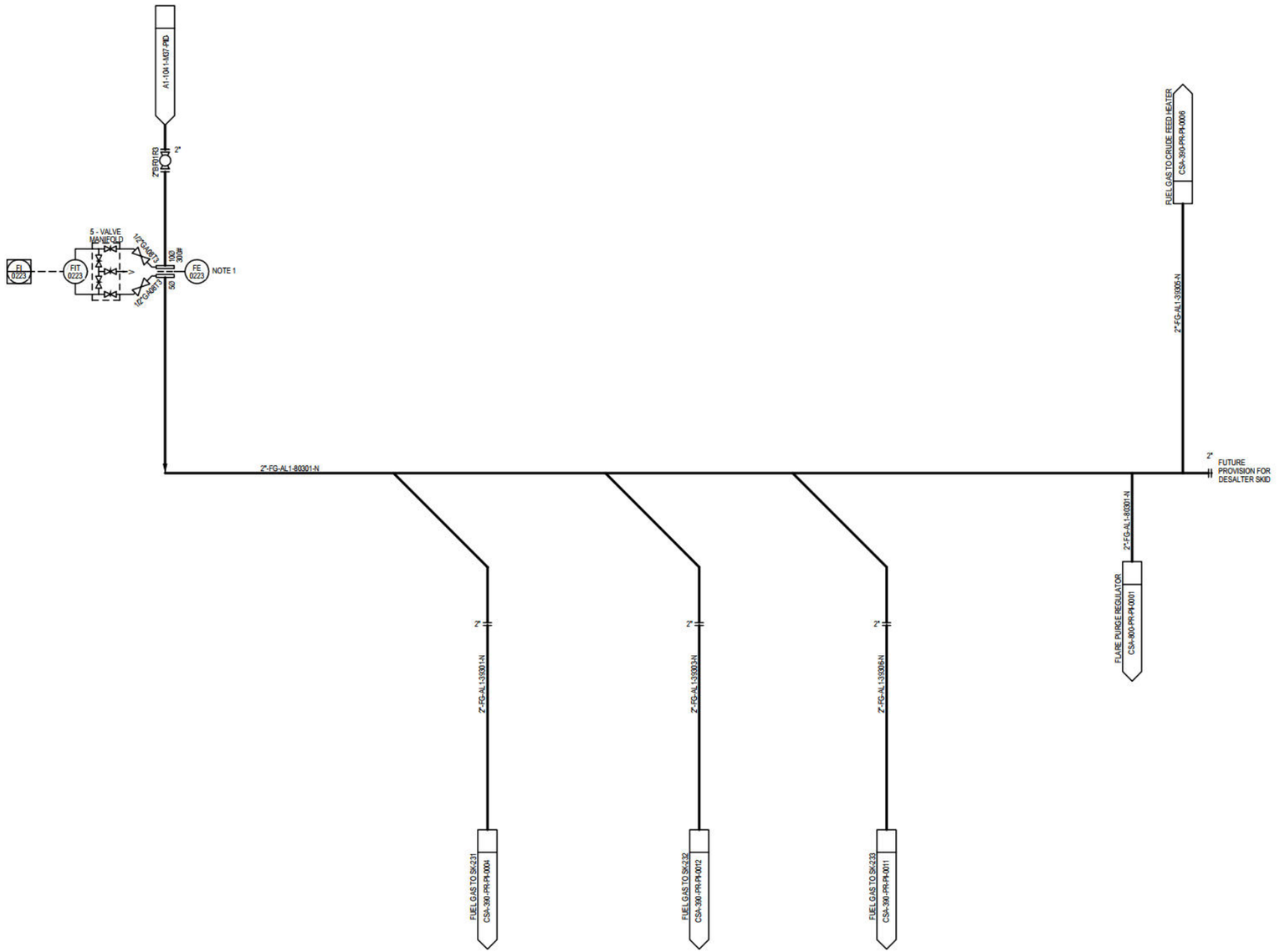

NOTES:

1. ORIFICE PLATE REMOVED, METER REPLACED BY FE-0231.

HOLDS:

[redacted]

NOTES:

HOLDS:

A1-8827-913

A1-8827-913

3"

3"

3"-GL-AL1-80422-N

3"

3"-GL-AL1-80421-N

3"

3/4"CA-0873

HP4

3/4"CA-0873

HP4

2"

2"

2"

2"

2"

2"

2"

2"

2"-GL-AL1-39425-25PP

2"-GL-AL1-39424-N

2"-GL-AL1-39423-25PP

2"-GL-AL1-39420-N

2"-GL-AL1-39423-25PP

2"-GL-AL1-39422-N

COOLING GLYCOL FROM VRU

CSA-390-PR-PA0015

COOLING GLYCOL TO VRU

CSA-390-PR-PA0015

COOLING GLYCOL FROM SK-232

CSA-390-PR-PA0012

COOLING GLYCOL TO SK-232

CSA-390-PR-PA0012

COOLING GLYCOL FROM SK-233

CSA-390-PR-PA0011

COOLING GLYCOL TO SK-233

CSA-390-PR-PA0011

[redacted]

A1-104-1-M46-PID

2"

A1-104-1-M46-PID

2"

2"-HM-AL1-80402-25H

25H

3/4"GK9BT3

HP

2"

2"-HM-AL1-80401-25H

25H

3/4"GK9BT3

RPV

2"

25H

2"

2"-HM-AL1-39402-25H

HEAT MEDIUM FROM SK-233

CSA-300-PR-PI-0009

25H

2"

2"-HM-AL1-39401-25H

HEAT MEDIUM TO SK-233

CSA-300-PR-PI-0009

25H

2"

2"-HM-AL1-39404-25H

HEAT MEDIUM FROM ATMOSPHERIC RESIDUE TANK

CSA-300-PR-PI-0016

25H

2"

2"-HM-AL1-39403-25H

HEAT MEDIUM TO ATMOSPHERIC RESIDUE TANK

CSA-300-PR-PI-0016

NOTES:

HOLDS:

[redacted]

NOTES:

HOLDS:

A1-1041-M16-PID

2"

2"-SL-AO3-80701-25ET

2"

3/4"GA08X3

HPV

NP

2"-SL-AL1-80700-25ET

2"

2"

2"

[redacted]

Equipment List

0	Jun 19, 2020	Issued for Information (TW19GP0001)	AR	SJ	AR
Rev.	**Issue Date**	**Purpose of Issue**	**Prepared**	**Checked**	**Approved**

This document contains confidential and proprietary information and shall not be used without the expressed written permission of Thermo Design Engineering Ltd.

APEGA Permit P2800

[redacted]

#	TAG	Description	Manufacturer / Model	Size / Duty / Weight	Additional Comments
1	E-0220	Feed/Kerosene Exchanger	Calhex, BEU 10 x 216	273 mm OD x 5604 mm TS/S / 155 kW / 1021 kg	BEU Shell and Tube Heat Exchanger
2	P-0220A/B	Crude Feed Pumps	MABRE, ANSI 1X2-10 WPH-M196	18.1 m3/hr @ 130 m Head / 394 kg	Horizontal Centrifugal Pumps
3	P-0220A/B-M	Crude Feed Pump Motors	TECO AEHH8N	15 kW @ 3600 rpm / 156 kg	460V / 3Ø / 60Hz, TEFC
4	TK-0220	Atmospheric Residue Storage Tank	Foremost, API 12F Modified	4724 mm OD x 9754 mm High / 12163 kg	159 m³ (1000BBL) Capacity
5	M-0220	Atmospheric Residue Tank Agitator	Dynamix, NMX6-40-5	9499 mm lg. Shaft w/ (2) 1499 mm dia. Impellers	Driver: 3.7 kW @ 1750 rpm, 460V / 3Ø / 60Hz, TEFC
6	E-0225A/B	Feed/Residue Exchanger	Calhex, AES 12 x 240	324 mm OD x 6215 mm TS/S / 238 kW / 1565 kg	AES Shell and Tube Heat Exchanger
7	E-0230	Feed/Diesel Exchanger	Calhex, BFU 13 x 111	356 mm OD x 2692 mm TS/S / 136 kW / 1202 kg	BFU Shell and Tube Heat Exchanger
8	E-0235	Fractionator Feed/Residue Exchanger	Calhex, AES 10 x 168	273 mm OD x 4267 mm TS/F / 220 kW / 1134 kg	AES Shell and Tube Heat Exchanger
9	H-0235	Crude Feed Heater	Tulsa Heaters Inc.	2072 kW (7.07 MMBTU/hr) / 21150 kg	Horizontal Cabin Heater
10	P-0235A/B	Fractionator Feed Pumps	CPC G1 X 2 X 9 VP-CX	15.3 m³/hr @ 91.4 m Head / 507 kg	API OH4 Vertical In-line Pumps
11	P-0235A/B-M	Fractionator Feed Pump Motors	WEG, 254LP Frame	11 kW @ 3600 rpm / 144 kg	460V / 3Ø / 60Hz, TEFC
12	V-0235	Fractionator Flash Drum	[redacted] S/N 4234	1524 mm ID x 3048 mm S/S / 4000 kg	Vertical 2-Phase Separator
13	E-0240	Steam Superheater Exchanger	Calhex, AGS 12 x 132	324 mm OD x 3353 mm TS/S / 35 kW / 1542 kg	AGS Shell and Tube Heat Exchanger
14	P-0240A/B	Residue Product Pumps	CPC S1.5 X 3 X 7 VP-CX	15.3 m³/hr @ 91.4 m Head / 398 kg	API OH4 Vertical In-line Pumps
15	P-0240A/B-M	Residue Product Pump Motors	WEG, 215LP Frame	5.6 kW @ 3600 rpm / 86 kg	460V / 3Ø / 60Hz, TEFC
14	T-0240	Crude Fractionator Tower	[redacted] S/N 4233	1,524 mm ID x 27,432 mm S/S / 31750 kg	Vertical Frac. Tower, 21 Trays, 2 Packed Sections
15	AC-0245	Diesel Product Cooler	Alfa Laval, E90-2-21	266 kW / 8614 kg (Total Wt:AC-0245/0250/0260)	Forced Draft Air Cooler (AC-0245/0250/0260 bays are in common frame)
16	AC-0245-M	Diesel Product Cooler Motor	TECO HH0254	18 kW @ 1750 rpm	460V / 3Ø / 60Hz, TEFC
16	P-0245A/B	Diesel Product Pumps	CPC S1 X 1.5 X 7 VP-CX	2.4 m³/hr @ 30 m Head / 347 kg	API OH4 Vertical In-line Pumps
17	P-0245A/B-M	Diesel Product Pump Motors	WEG, 215LP Frame	5.6 kW @ 3600 rpm / 86 kg	460V / 3Ø / 60Hz, TEFC
18	T-0245	Diesel Stripper	[redacted] S/N 4235 / XX kg	457 mm OD x 6553 mm S/F / 1600 kg	Vertical Packed Tower
19	AC-0250	Kerosene Product Cooler	Alfa Laval, E90-2-21	294 kW / 8614 kg (Total Wt: AC-0245/0250/0260)	Forced Draft Air Cooler (AC-0245/0250/0260 bays are in common frame)
20	AC-0250-M	Kerosene Product Cooler Motor	TECO HH0254	18 kW @ 1750 rpm	460V / 3Ø / 60Hz, TEFC
20	P-0250A/B	Kerosene Product Pumps	CPC S2 X 3 X 13 VP-CX	5.5 m³/hr @ 152 m Head / 912 kg	API OH4 Vertical In-line Pumps
21	P-0250A/B-M	Kerosene Product Pump Motors	WEG, 286LP Frame	22 kW @ 3600 rpm / 239 kg	460V / 3Ø / 60Hz, TEFC
22	T-0250	Kerosene Stripper	[redacted] S/N 4236 / XX kg	457 mm OD x 6553 mm S/F / 1600 kg	Vertical Packed Tower
23	AC-0255	Fractionator Condenser	Alfa Laval, E108-2-20	2244 kW / 16170 kg	Forced Draft Air Cooler c/w Hot Air Recirculation
24	AC-0255A/B-M	Fractionator Condenser Motors	TECO HH0304	22 kW @ 1750 rpm / 215 kg	460V / 3Ø / 60Hz, TEFC
25	P-0255A/B	Fractionator Reflux Pumps	CPC H1.5 X 3 X 7 VP-CX	22.6 m³/hr @ 40 m Head / 468 kg	API OH4 Vertical In-line Pumps
26	P-0255A/B-M	Fractionator Reflux Pump Motors	WEG, 215LP Frame	7.5 kW @ 3600 rpm / 112 kg	460V / 3Ø / 60Hz, TEFC
27	V-0255	Fractionator Reflux Drum	[redacted] S/N 4237	1219 mm ID x 3048 mm S/S / 2500 kg	Horizontal 3 Phase Separator c/w 610 mm Boot

[redacted]

#	TAG	Description	Manufacturer / Model	Size / Duty / Weight	Additional Comments
28	AC-0260	Naphtha Product Cooler	Alfa Laval, E90-2-21	90 kW / 8614 kg (Total Wt: AC-0245/0250/0260)	Forced Draft Air Cooler (AC-0245/0250/0260 bays are in common frame)
29	P-0260A/B	Fractionator Produced Water Pumps	Wanner H25EKSGHFHHB	2.5 m3/hr @ 81 m Head / 90 kg	Seal-less Hydracell Pumps
30	P-0260A/B-M	Fractionator Produced Water Pump Motors	TECO PDH0024	1.5 kW @ 1800 rpm	460V / 3Ø / 60Hz, TEFC
31	BH-0270	Electric Building Heater	Hazloc XEU1-20-250-480360-A-Y-B T1	25 kW, 20" Fan / 124 kg	460V / 3Ø / 60Hz, TEFC
32	C-0270	Gas Compressor	Ro-Flo 211M	75-180 MSCFD / 646 kg	Rotary Vane Compressor
33	C-0270-M	Gas Compressor Driver	TECO APH0408-841	30 kW, 400-900 rpm Speed Range / 418 kg	460V / 3Ø / 60Hz, TEFC
34	E-0270	Inlet Gas Pre-Cooler	Kelvion GVH700L-40	4.14 m² surafce area / 27 kg	Brazed Flat Plate Heat Exchanger
35	EF-0270	Buidling Exhaust Fan	Soper's KL12XP1PH	1010 CFM @ 1800 rpm / 13 kg	115/230V / 1Ø / 60Hz
36	P-0270A	Drain Booster LP Pump	Grundfos CRN1-19 M-FGJ-A-V-HQQV	0.75 m³/hr @ 1750 rpm / 60 kg	Magdrive Multistage Centrifugal Pump
37	P-0270A-M	Drain Booster LP Pump Motor	WEG, D56 Frame	0.75 kW @ 1750 rpm / 12 kg	230/460V / 3Ø / 60Hz, TEFC
38	P-0270B	Drain Charge LP Pump	Wanner M03EKSGSNSMA	0.5 m³/hr @ 1750 rpm / 36 kg	Seal-less Hydracell Pump
39	P-0270B-M	Drain Charge LP Pump Motor	TECO-RFO/74C	0.56 kW @ 1800 rpm / 11 kg	230/460V / 3Ø / 60Hz
40	V-0270	Suction Scrubber	NEXT Compression	273 mm OD x 2083 mm S/S / 183 kg	Vertical 2-Phase Separator
41	P-0275A	Drain Booster LP Pump	Grundfos CRN1-19 M-FGJ-A-V-HQQV	0.75 m³/hr @ 1750 rpm / 60 kg	Magdrive Multistage Centrifugal Pump
42	P-0275A-M	Drain Booster LP Pump Motor	WEG, D56 Frame	0.75 kW @ 1750 rpm / 12 kg	230/460V / 3Ø / 60Hz, TEFC
43	P-0275B	Drain Charge LP Pump	Wanner M03EKSGSNSMA	0.5 m³/hr @ 1750 rpm / 36 kg	Seal-less Hydracell Pump
44	P-0275B-M	Drain Charge LP Pump Motor	TECO-RFO/74C	0.56 kW @ 1800 rpm / 11 kg	230/460V / 3Ø / 60Hz
45	V-0275	Discharge Scrubber	NEXT Compression	273 mm OD x 2083 mm S/S / 164 kg	Vertical 2-Phase Separator
46	P-0290	pH Neutralizer Chemical Injection Pump	Sirius Controls Comet Single Head Pump	4.9 L/day Injection Rate	24VDC Motor c/w Sirius Fusion Controller
47	P-0290S	Chemical Injection Pump Fluid End Spare	Sirius Controls Comet Single Head Pump	0-350 L/Day Range	Spare for P-0290/0295
47	TK-0290	pH Neutralizer Chemical Storage Tank	Siruis Controls Nova Tank	0.76 m³ (200 BBL)	c/w Hard Topper Weather Cover
48	P-0295	H2S Scavenger Chemical Injection Pump	Sirius Controls Comet Single Head Pump	11.4 L/day Injection Rate	24VDC Motor c/w Sirius Fusion Controller
49	TK-0295	H2S Scavenger Chemical Storage Tank	Siruis Controls Nova Tank	0.76 m³ (200 BBL)	c/w Hard Topper Weather Cover
50					

Equipment List

Equipment List

Rev.	Issue Date	Revision Comment	Prepared:	Process:	Electrical:
0	18-Jun-20	Issued for Information	AR	SJ	AR

#	TAG	Description	Manufacturer / Model	Size / Duty / Weight	Additional Comments
1	E-0220	Feed/Kerosene Exchanger	Calhex, BEU 10 x 216	273 mm OD x 5604 mm TS/S / 155 kW / 1021 kg	BEU Shell and Tube Heat Exchanger
2	P-0220A/B	Crude Feed Pumps	MABRE, ANSI 1X2-10 WPH-M196	18.1 m3/hr @ 130 m Head / 394 kg	Horizontal Centrifugal Pumps
3	P-0220A/B-M	Crude Feed Pump Motors	TECO AEHH8N	15 kW @ 3600 rpm / 156 kg	460V / 3Ø / 60Hz, TEFC
4	TK-0220	Atmospheric Residue Storage Tank	Foremost, API 12F Modified	4724 mm OD x 9754 mm High / 12163 kg	159 m³ (1000BBL) Capacity
5	M-0220	Atmospheric Residue Tank Agitator	Dynamix, NMX6-40-5	9499 mm lg. Shaft w/ (2) 1499 mm dia. Impellers	Driver: 3.7 kW @ 1750 rpm, 460V / 3Ø / 60Hz, TEFC
6	E-0225A/B	Feed/Residue Exchanger	Calhex, AES 12 x 240	324 mm OD x 6215 mm TS/S / 238 kW / 1565 kg	AES Shell and Tube Heat Exchanger
7	E-0230	Feed/Diesel Exchanger	Calhex, BFU 13 x 111	356 mm OD x 2692 mm TS/S / 136 kW / 1202 kg	BFU Shell and Tube Heat Exchanger
8	E-0235	Fractionator Feed/Residue Exchanger	Calhex, AES 10 x 168	273 mm OD x 4267 mm TS/F / 220 kW / 1134 kg	AES Shell and Tube Heat Exchanger
9	H-0235	Crude Feed Heater	Tulsa Heaters Inc.	2072 kW (7.07 MMBTU/hr) / 21150 kg	Horizontal Cabin Heater
10	P-0235A/B	Fractionator Feed Pumps	CPC G1 X 2 X 9 VP-CX	15.3 m³/hr @ 91.4 m Head / 507 kg	API OH4 Vertical In-line Pumps
11	P-0235A/B-M	Fractionator Feed Pump Motors	WEG, 254LP Frame	11 kW @ 3600 rpm / 144 kg	460V / 3Ø / 60Hz, TEFC
12	V-0235	Fractionator Flash Drum	[redacted] S/N 4234	1524 mm ID x 3048 mm S/S / 4000 kg	Vertical 2-Phase Separator
13	E-0240	Steam Superheater Exchanger	Calhex, AGS 12 x 132	324 mm OD x 3353 mm TS/S / 35 kW / 1542 kg	AGS Shell and Tube Heat Exchanger
14	P-0240A/B	Residue Product Pumps	CPC S1.5 X 3 X 7 VP-CX	15.3 m³/hr @ 91.4 m Head / 398 kg	API OH4 Vertical In-line Pumps
15	P-0240A/B-M	Residue Product Pump Motors	WEG, 215LP Frame	5.6 kW @ 3600 rpm / 86 kg	460V / 3Ø / 60Hz, TEFC
14	T-0240	Crude Fractionator Tower	[redacted] S/N 4233	1,524 mm ID x 27,432 mm S/S / 31750 kg	Vertical Frac. Tower, 21 Trays, 2 Packed Sections
15	AC-0245	Diesel Product Cooler	Alfa Laval, E90-2-21	266 kW / 8614 kg (Total Wt:AC-0245/0250/0260)	Forced Draft Air Cooler (AC-0245/0250/0260 bays are in common frame)
16	AC-0245-M	Diesel Product Cooler Motor	TECO HH0254	18 kW @ 1750 rpm	460V / 3Ø / 60Hz, TEFC
16	P-0245A/B	Diesel Product Pumps	CPC S1 X 1.5 X 7 VP-CX	2.4 m³/hr @ 30 m Head / 347 kg	API OH4 Vertical In-line Pumps
17	P-0245A/B-M	Diesel Product Pump Motors	WEG, 215LP Frame	5.6 kW @ 3600 rpm / 86 kg	460V / 3Ø / 60Hz, TEFC
18	T-0245	Diesel Stripper	[redacted] S/N 4235 / XX kg	457 mm OD x 6553 mm S/F / 1600 kg	Vertical Packed Tower
19	AC-0250	Kerosene Product Cooler	Alfa Laval, E90-2-21	294 kW / 8614 kg (Total Wt: AC-0245/0250/0260)	Forced Draft Air Cooler (AC-0245/0250/0260 bays are in common frame)
20	AC-0250-M	Kerosene Product Cooler Motor	TECO HH0254	18 kW @ 1750 rpm	460V / 3Ø / 60Hz, TEFC
20	P-0250A/B	Kerosene Product Pumps	CPC S2 X 3 X 13 VP-CX	5.5 m³/hr @ 152 m Head / 912 kg	API OH4 Vertical In-line Pumps
21	P-0250A/B-M	Kerosene Product Pump Motors	WEG, 286LP Frame	22 kW @ 3600 rpm / 239 kg	460V / 3Ø / 60Hz, TEFC
22	T-0250	Kerosene Stripper	[redacted] S/N 4236 / XX kg	457 mm OD x 6553 mm S/F / 1600 kg	Vertical Packed Tower
23	AC-0255	Fractionator Condenser	Alfa Laval, E108-2-20	2244 kW / 16170 kg	Forced Draft Air Cooler c/w Hot Air Recirculation
24	AC-0255A/B-M	Fractionator Condenser Motors	TECO HH0304	22 kW @ 1750 rpm / 215 kg	460V / 3Ø / 60Hz, TEFC
25	P-0255A/B	Fractionator Reflux Pumps	CPC H1.5 X 3 X 7 VP-CX	22.6 m³/hr @ 40 m Head / 468 kg	API OH4 Vertical In-line Pumps
26	P-0255A/B-M	Fractionator Reflux Pump Motors	WEG, 215LP Frame	7.5 kW @ 3600 rpm / 112 kg	460V / 3Ø / 60Hz, TEFC
27	V-0255	Fractionator Reflux Drum	[redacted] S/N 4237	1219 mm ID x 3048 mm S/S / 2500 kg	Horizontal 3 Phase Separator c/w 610 mm Boot

Equipment List

Rev.	Issue Date	Revision Comment	Prepared:	Process:	Electrical:
0	18-Jun-20	Issued for Information	AR	SJ	AR

#	TAG	Description	Manufacturer / Model	Size / Duty / Weight	Additional Comments
28	AC-0260	Naphtha Product Cooler	Alfa Laval, E90-2-21	90 kW / 8614 kg (Total Wt: AC-0245/0250/0260)	Forced Draft Air Cooler (AC-0245/0250/0260 bays are in common frame)
29	P-0260A/B	Fractionator Produced Water Pumps	Wanner H25EKSGHFHHB	2.5 m3/hr @ 81 m Head / 90 kg	Seal-less Hydracell Pumps
30	P-0260A/B-M	Fractionator Produced Water Pump Motors	TECO PDH0024	1.5 kW @ 1800 rpm	460V / 3Ø / 60Hz, TEFC
31	BH-0270	Electric Building Heater	Hazloc XEU1-20-250-480360-A-Y-B T1	25 kW, 20" Fan / 124 kg	460V / 3Ø / 60Hz, TEFC
32	C-0270	Gas Compressor	Ro-Flo 211M	75-180 MSCFD / 646 kg	Rotary Vane Compressor
33	C-0270-M	Gas Compressor Driver	TECO APH0408-841	30 kW, 400-900 rpm Speed Range / 418 kg	460V / 3Ø / 60Hz, TEFC
34	E-0270	Inlet Gas Pre-Cooler	Kelvion GVH700L-40	4.14 m² surafce area / 27 kg	Brazed Flat Plate Heat Exchanger
35	EF-0270	Buidling Exhaust Fan	Soper's KL12XP1PH	1010 CFM @ 1800 rpm / 13 kg	115/230V / 1Ø / 60Hz
36	P-0270A	Drain Booster LP Pump	Grundfos CRN1-19 M-FGJ-A-V-HQQV	0.75 m³/hr @ 1750 rpm / 60 kg	Magdrive Multistage Centrifugal Pump
37	P-0270A-M	Drain Booster LP Pump Motor	WEG, D56 Frame	0.75 kW @ 1750 rpm / 12 kg	230/460V / 3Ø / 60Hz, TEFC
38	P-0270B	Drain Charge LP Pump	Wanner M03EKSGSNSMA	0.5 m³/hr @ 1750 rpm / 36 kg	Seal-less Hydracell Pump
39	P-0270B-M	Drain Charge LP Pump Motor	TECO-RFO/74C	0.56 kW @ 1800 rpm / 11 kg	230/460V / 3Ø / 60Hz
40	V-0270	Suction Scrubber	NEXT Compression	273 mm OD x 2083 mm S/S / 183 kg	Vertical 2-Phase Separator
41	P-0275A	Drain Booster LP Pump	Grundfos CRN1-19 M-FGJ-A-V-HQQV	0.75 m³/hr @ 1750 rpm / 60 kg	Magdrive Multistage Centrifugal Pump
42	P-0275A-M	Drain Booster LP Pump Motor	WEG, D56 Frame	0.75 kW @ 1750 rpm / 12 kg	230/460V / 3Ø / 60Hz, TEFC
43	P-0275B	Drain Charge LP Pump	Wanner M03EKSGSNSMA	0.5 m³/hr @ 1750 rpm / 36 kg	Seal-less Hydracell Pump
44	P-0275B-M	Drain Charge LP Pump Motor	TECO-RFO/74C	0.56 kW @ 1800 rpm / 11 kg	230/460V / 3Ø / 60Hz
45	V-0275	Discharge Scrubber	NEXT Compression	273 mm OD x 2083 mm S/S / 164 kg	Vertical 2-Phase Separator
46	P-0290	pH Neutralizer Chemical Injection Pump	Sirius Controls Comet Single Head Pump	4.9 L/day Injection Rate	24VDC Motor c/w Sirius Fusion Controller
47	P-0290S	Chemical Injection Pump Fluid End Spare	Sirius Controls Comet Single Head Pump	0-350 L/Day Range	Spare for P-0290/0295
47	TK-0290	pH Neutralizer Chemical Storage Tank	Siruis Controls Nova Tank	0.76 m³ (200 BBL)	c/w Hard Topper Weather Cover
48	P-0295	H2S Scavenger Chemical Injection Pump	Sirius Controls Comet Single Head Pump	11.4 L/day Injection Rate	24VDC Motor c/w Sirius Fusion Controller
49	TK-0295	H2S Scavenger Chemical Storage Tank	Siruis Controls Nova Tank	0.76 m³ (200 BBL)	c/w Hard Topper Weather Cover
50					

UPDATED: June 18, 2020 2:05:14 PM BY: Lquach
PRINTED: June 18, 2020 2:05:49 PM DWG NAME: P:\CSA\Design Drafting\General\GN-LY\CSA-000-GN-LY-0001-01-01 Rev08 EQUIPMENT LAYOUT.dwg

PLANT NORTH REFERENCE

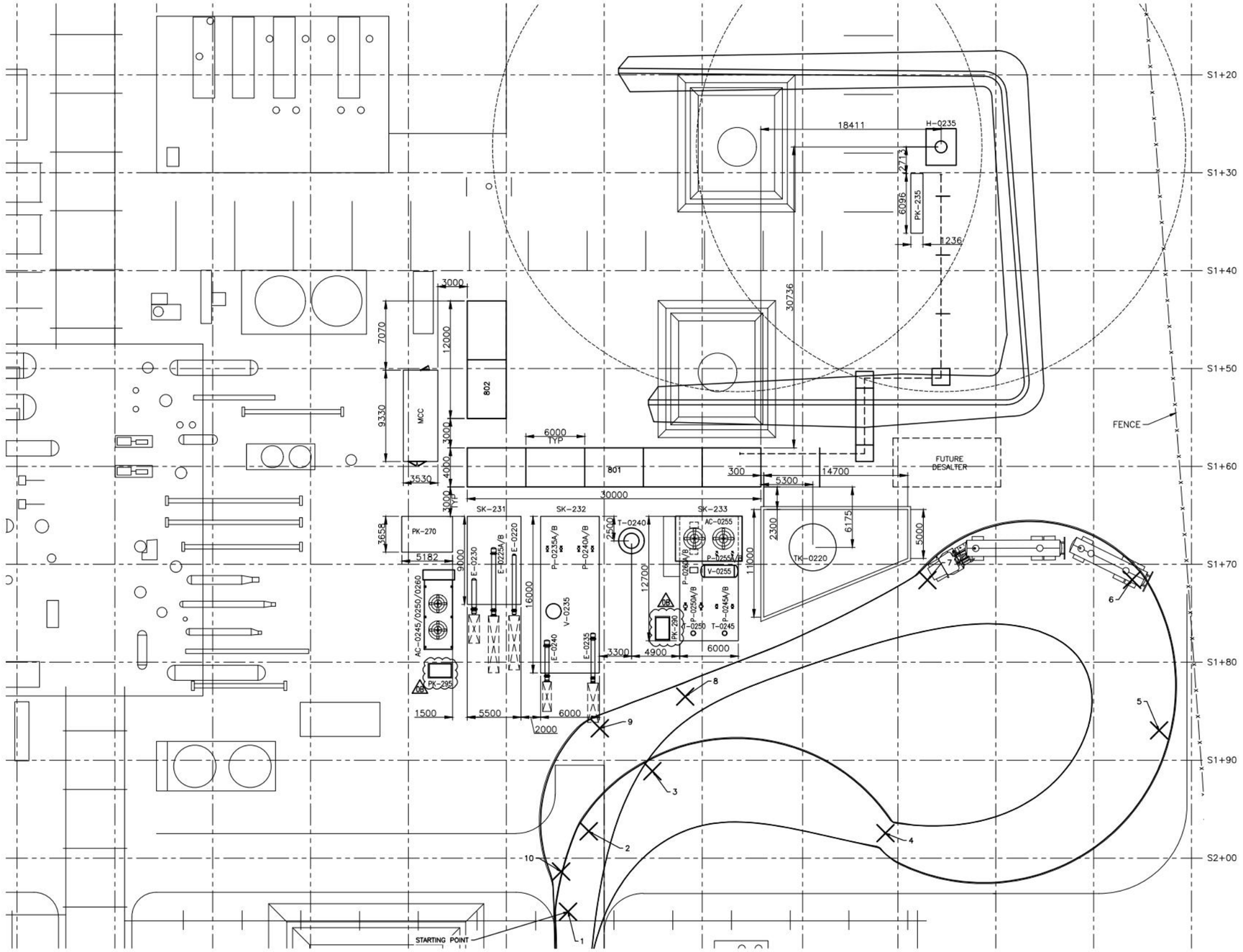

PLAN VIEW
SCALE 1:200

EQUIPMENT SCHEDULE

TAG NO.:	QTY	DESCRIPTION
AC-0245/0250/0260	1	DIESEL/KEROSENE/NAPHTHA COOLER
AC-0255	1	FRACTIONATOR CONDENSER
E-0220	1	FEED/KEROSENE EXCHANGER
E-0225A/B	1	FEED/RESIDUE EXCHANGER
E-0230	1	FEED/DIESEL EXCHANGER
E-0235	1	FRACTIONATOR FEED/RESIDUE EXCHANGER
E-0240	1	STEAM SUPERHEATER EXCHANGER
H-0235	1	CRUDE FEED HEATER
P-0235A/B	2	FRACTIONATOR FEED PUMPS
P-0240A/B	2	RESIDUE PRODUCT PUMPS
P-0245A/B	2	DIESEL PRODUCT PUMPS
P-0250A/B	2	KEROSENE PRODUCT PUMPS
P-0255A/B	2	FRACTIONATOR REFLUX PUMPS
P-0260A/B	2	FRACTIONATOR PRODUCED WATER PUMPS
		DELETED
GB		DELETED
T-0240	1	CRUDE FRACTIONATOR TOWER
T-0245	1	DIESEL STRIPPER
T-0250	1	KEROSENE STRIPPER
TK-0220	1	ATMOSPHERIC RESIDUE STORAGE TANK
		DELETED
GB		DELETED
V-0235	1	FRACTIONATOR FLASH DRUM
V-0255	1	FRACTIONATOR REFLUX DRUM
PK-235	1	FUEL GAS PACKAGE
PK-0290	1	PH NEUTRALIZER CHEM. INJECTION
GB PK-0295	1	H2S SCAVENGER CHEM. INJECTION

NOTES

1. DIMENSIONS ARE IN METRIC UNITS

[redacted]

[redacted]

[redacted]

Operating Instructions

[redacted]

0	17-07-2020	Issued for Use	SJ	JH	AR
Rev	**Issue Date**	**Purpose of Issue**	**Prepared**	**Checked**	**Approved**

This document contains confidential and proprietary information and shall not be used except by the expressed written permission of Thermo Design Engineering Ltd.

3.3.2 Start-up 2
3.3.2.1 Start-up Preparation 2
3.3.2.2 General Overview 3
3.3.2.3 Prefractionation & Fractionation Unit 4
3.3.2.4 Vapour Recovery Unit 17
3.3.3 Normal Operation 18
3.3.3.1 General Comments 18
3.3.4 Shutdown 19
3.3.4.1 General Comments 19
3.3.4.2 Prefractionation & Fractionation Unit Normal Stop Sequence 20
3.3.4.3 Vapour Recovery Unit Normal Stop Sequence 24
3.3.5 Restart 25

This document contains confidential and proprietary information and shall not be used except by the expressed written permission of Thermo Design Engineering Ltd.

3.3 Operating Instructions

3.3.1 Document Scope

The operating instructions outlined in this section of the manual cover operation of the Crude Fractionation Unit installed at the Brazeau River Gas Complex. Thermodesign Engineering Ltd. ([redacted]) scope for this project was limited to the design and supply of the Crude Fractionation Unit, Vapour Recovery Unit, and Residue Product Storage.

Pre-existing process equipment and utility systems outside of [redacted] scope are utilized in combination with the [redacted] supplied equipment to provide a comprehensive project scope. The pre-existing process equipment and utility systems include the following:

- Prefractionation Unit
- Product Storage (Naphtha, Kerosene, Diesel)
- Crude Feed Storage
- Instrument Air
- Flare
- Closed Drain
- Steam
- Cooling Glycol
- Heat Medium
- Produced Water Handling

In addition to the aforementioned equipment supply scope, [redacted] also provided process engineering support related to the pre-existing prefractionation unit which was limited to process simulation (steady-state), Prefractionator tray re-rate, Prefractionator Reboiler re-rate, Prefractionator Condenser re-rate, and control valve re-rate.

Although operating procedures related to the pre-existing equipment are not in [redacted]s scope of work, the prefractionation unit is integral to the start-up, shutdown, and normal operation of the Crude Fractionator and as a result, some high level details related to the operation of the Prefractionator are included in this document.

All operating procedures listed in this manual related to the prefractionation unit should undergo an engineering review / verification by the engineering company having conducted the overall engineering assessment of the prefractionation unit revamp.

This manual does not include start-up, shutdown, or operating procedures related to the associated pre-existing utility systems listed above.

This document contains confidential and proprietary information and shall not be used except by the expressed written permission of Thermo Design Engineering Ltd.

[redacted]

3.3.2 Start-up

3.3.2.1 Start-up Preparation

Prior to start-up of the prefractionation and fractionation unit, perform the following to ensure safe and smooth start-up of the units.

- Ensure commissioning of process equipment, including system leak testing, motor rotation and alignment checks, instrument calibration checks, control systems, loop testing of control loops and control system logic, relief systems, etc. are complete.
- Verify instrument air supply pressure to end devices and fully stroke each device to ensure correct operation.
- Utility systems as required are available and operational, including flare and drain systems, electrical power supply, instrument air, fuel gas and heat medium / steam, glycol cooling, and heat tracing.
- Ensure the system is flushed, clean, dried, purged, and pressurized to prevent air ingress.
- Check that all instrumentation isolation valves are open, drain valves are closed, and PSV's are correctly aligned.
- Ensure emergency escape routes are not obstructed.
- Ensure all lines are free of foreign debris.
- Check all drivers for correct rotation and monitor the equipment for unusual vibrations, excessive temperatures or other suspect operating characteristics.
- Double check that all the equipment is ready for start-up and that all personnel in the area are aware the unit is being started.
- Check that the electric tracing on the discharge of the Residue Product Pumps (P-0240A/B) piping is turned on and set to a temperature appropriate for the fluid being pumped. The fluid being pumped may change with varying steps in the start-up process.
- Ensure cooling glycol flow to the associated pump seal plans is started and adjusted to the appropriate flow setpoint at this stage (P-0235A/B, P-0240A/B, P-0245A/B, P-0250A/B)



All water must be removed from the system before the start-up process can begin. The high temperatures used in the crude fractionation process can cause rapid water vaporization and result in dangerous/damaging pressure spikes. Extra precautions should be taken to ensure that all water has been removed for all system low points and in equipment internals.

This document contains confidential and proprietary information and shall not be used except by the expressed written permission of Thermo Design Engineering Ltd.

[redacted]

This procedure forms the basis for a unit startup considering cold, dry and empty equipment and piping. All commissioning activities are complete at this point.

Two of the primary focal points in this start-up procedure are as follows:

- Due to the high operating temperatures in the Fractionation Unit, it is necessary to bring the unit up to normal operating temperature in a controlled manner. This controlled rate of temperature increase is necessary to ensure equipment is not damaged due to excessive mechanical stresses.
- Crude oil, diesel product, and residue product have a tendency to solidify and foul equipment at low temperatures. The heat exchangers and tower trays are particularly prone. A lighter feed condensate is to be utilized for the duration of the temperature ramp to minimize this fouling. Further details are provided below.

Start-Up Feedstock:

During the initial start-up, feed temperatures to the Fractionator (T-0240) will gradually increase to the point where the lighter naphtha components will start to boil with the resultant vapour travelling upwards through the tower. This vapour will also carry with it some heavier / higher boiling point components (tar) and without tower reflux or rectification during this period these heavier components will make their way to the colder upper trays of the tower and preferentially condense and potentially solidify or “gum up” the trays.

To minimize this effect, it is recommended to utilize a lighter condensate feed for the duration of the warm-up period. This will provide a higher volume fraction of Naphtha and improve the solubility of the heavy tar components and minimize fouling. The condensate will also contain less of the heavy boiling materials than the normal crude oil feed.



Recommended density range of start-up condensate: 770 kg/m3 to 780 kg/m3.

This document contains confidential and proprietary information and shall not be used except by the expressed written permission of Thermo Design Engineering Ltd.

3.3.2.3 Prefractionation & Fractionation Unit

3.3.2.3.1 Prefractionation Unit Overview

The Prefractionation Unit is utilized to remove light ends from the crude oil and prevents excessive vapour traffic in the downstream Fractionator. The Prefractionator (T-0201) is a reboiled and refluxed distillation tower, which was formerly the Plant 1 Condensate Stabilizer. The tower, reflux drum, reflux pumps, overhead condenser, bottoms pumps, fired reboiler, piping, and most associated instrumentation, is existing equipment that has been repurposed for this project.

The Prefractionator (T-0201) removes light straight run naphtha from the crude as an overhead product from the tower overhead reflux system. The light naphtha is then mixed with the heavier naphtha from the Fractionator (T-0240) and is directed to the Naphtha Cooler (AC-0260) where the combined naphtha product is cooled prior to storage. Any residual water collected in the Prefractionator Reflux Drum (V-0255) is separated from the light naphtha and directed to the facility produced water system.

The Prefractionator bottom crude product exits under level control at a temperature of approximately 225°C. A small slipstream of light naphtha from the Prefractionator reflux system is mixed through flow control with the bottom crude product upstream of the Fractionator Flash Drum (V-0235). The light naphtha partially flashes when mixing with the hot crude bottoms stream and is separated from the bulk liquid phase in the Fractionator Flash Drum prior to flowing under pressure control to tray #18 of the Fractionator. Vapour from the flash drum provides additional stripping vapour to the upper portions of the Fractionator tower and allows operations the ability to control this stripping rate by manipulating the flow control setpoint of the light naphtha being introduced upstream of the Fractionator Flash Drum.

3.3.2.3.2 Fractionation Unit Overview

Liquids from the Fractionator Flash Drum are the primary feed to the Fractionator. The crude is pumped through the Fractionator Feed-Residue Exchanger (E-0235A/B) where they are further preheated prior to flowing into the Crude Feed Heater (H-0235).

The Crude Feed Heater increases the temperature of the crude to approximately 350°C, resulting in approximately 75% vapourization (mass basis). The two-phase mixture from the heater is then introduced as the primary feed to the Fractionator.

The Fractionator is a refluxed distillation tower, which forms the heart of the process. This tower uses trays and structured packing to facilitate mass transfer between falling liquid and rising vapour, enabling the separation and purification of the crude feed into heavy naphtha, kerosene, diesel, and atmospheric residue. The distillate products (kerosene and diesel) are withdrawn from different trays in the fractionator under flow control, with rates adjusted to maintain product quality.

The heavy naphtha is condensed from the tower overhead vapours using the Fractionator Condenser (AC-0255), along with a small amount of condensed water, which is derived from the introduction of

This document contains confidential and proprietary information and shall not be used except by the expressed written permission of Thermo Design Engineering Ltd.

steam utilized for stripping the liquid products. The Naphtha is separated from the steam condensate in the Fractionator Reflux Drum (V-0255). A portion of the naphtha is pumped back to the top of the Fractionator as reflux, while the remainder is blended with light naphtha from the Prefractionator and is then cooled and metered prior to flowing to the Naphtha Storage Tank (TK-4005).

Kerosene and diesel are drawn from intermediate points on the Fractionator. These products flow through the Kerosene Stripper (T-0250) and Diesel Stripper (T-0245), respectively. The liquid product flows through the stripper countercurrent to superheated steam. The steam strips light ends from the products and this stripper overhead stream is then re-introduced to the Fractionator as hydrocarbon-saturated stream. The kerosene and diesel flow from the bottom of each stripper into the Kerosene Product Pump (P-0250A/B) and Diesel Product Pump (P-0245A/B) (respectively). These two streams are sent back to the Feed-Kerosene Exchanger (E-0220) and Feed-Diesel Exchanger (E-0230) (respectively) for heat exchange with incoming cold crude oil. The kerosene and diesel then flow through a product cooler (AC-0250/AC-0245) prior to being metered and directed to product storage (TK-4004/TK-4003).

Steam is also added below the Fractionator flash zone to increase the purity of residue product and increase the flash point. Atmospheric residue is the final liquid product, which flows out the bottom of the fractionator at a temperature of approximately 310°C. The residue is pumped, using the Atmospheric Residue Pump (P-0240A/B), through the Steam Superheater (E-0240). This superheats the LP steam for utilization in the Fractionator and cools the residue prior to further cooling steps in the Fractionator Feed-Residue Exchanger (E-0235) and Feed-Residue Exchanger (E-0225A/B). The residue then flows to the Atmospheric Residue Storage Tank (TK-0220) where the product is periodically exported via truck.

This document contains confidential and proprietary information and shall not be used except by the expressed written permission of Thermo Design Engineering Ltd.

The Prefractionator Reboiler (H-0201A) will be used to slowly heat-up the Prefractionation section with the Condensate. That heated Condensate will be circulated between the Reboiler and the Prefractionator to facilitate tower heat-up. It will then flow from the bottom of the Prefractionator (T-0201) to Fractionator Flash Drum (V-0235) and then into the Crude Fractionator (T-0240). The Prefractionator Reboiler is heating both towers at this point. Both towers will be maintained at temperatures to facilitate boiling Naphtha material overhead and condensing it. They will then be operated at total reflux ratio to wet their trays.

Once the equipment is heated and the trays are wet, Crude Oil will be cut into the feed to the unit. Crude Oil will be pumped into the unit, through the Prefractionator and into the Crude Feed Heater (H-0235). The Crude Feed Heater will be used to slowly heat-up the rest of the Crude Fractionation section.

Fuel gas will be used to pressurize and "warm" the equipment before feeding Stabilized Condensate to the unit.

The overall sequence of startup activities is:

1. Pressure and warm-up the systems with fuel gas
2. Feed stabilized trucked in startup Condensate to heat up the equipment
3. Introduce the Crude Oil feed
4. Bring the unit to the desired operating conditions

Assumptions:

a) There is enough Stabilized Condensate to facilitate start-up operations and crude oil feed is available for startup.

b) All product air coolers will be started as deemed necessary by plant personnel.

c) The Vapour Recovery Unit (VRU) is available when required.

d) The process control system is available and is able to be operated manually. Controllers will be placed into automatic mode during the procedure as deemed appropriate and necessary by the operator.

e) Emergency shutdown system startup / maintenance inhibits and overrides have been set manually by the operator. These will be reset to the required normal operating values by the operator during the procedure as deemed necessary by the operator.

f) Following procedure is based on the assumption of a winter start-up with equipment initially at cold ambient conditions. If ambient temperatures are above the fuel gas supply temperature, the fuel gas warm-up steps in this procedure may not be required.

This document contains confidential and proprietary information and shall not be used except by the expressed written permission of Thermo Design Engineering Ltd.

[redacted]

3.3.2.3.3.1 Pressurize and warm-up the systems

1. Flow fuel gas at a minimal flowrate to the bottom of the Prefractionator (T-0201) to slowly warm up and pressurize the tower and the tower overhead equipment.
2. Connect fuel gas to an available high point vent to ensure FG can flow through all three pre-heat exchangers. Flow fuel gas at a minimum flowrate through the crude side of the preheat train into the Prefrac tower to gradually warm up the heat exchangers (E-0220, E-0225A/B, E-0230). This step should start after a positive pressure (> 35 kPag) is reached at the top of the Prefrac tower.
3. Control the Prefractionator pressure in T-0201 at approximately 200 kPag as the tower system heats up by sending the fuel gas to flare via PV-3019. Periodically check for condensed water in the Prefractionator Reflux Drum (V-0202) and drain as necessary.
4. Once the Preheat exchangers (crude side), Prefrac tower and Prefractionator Reflux Drum (V-0202) are warmed to about 0 °C, the fuel gas flowrate can be increased to expedite the pressurization and warmup process.
5. Continue to control the Prefrac overhead pressure. Periodically check for condensed water in the Prefractionator Reflux Drum (V-0202) and drain as necessary.
6. Flow fuel gas from the dedicated fuel gas line (CSA-390-RP-PI-0008) on skid-233 at a minimum flowrate to the Diesel Stripper (T-0245) to slowly warm up the Crude Fractionator tower (T-0240) the tower overhead equipment and the Diesel Stripper
7. Flow fuel gas at a minimum flowrate to the top of Fractionator Flash Drum (V-0235) and through to the Crude Frac tower. This step should start after a positive pressure (> 14 kPag) is reached at the top of the Crude Frac tower.
8. NOTE: Prefrac bottoms level control valve, LV-1202, should remain closed at this point. Pressure controller, PV-3209, controlling the Flash Drum (V-0235) pressure should be kept wide open at this point. Periodically check the pressure in the Flash Drum and cut back on the fuel gas to the Flash Drum if the pressure gets too high (> 160 kPag).
9. Flow fuel gas from the dedicated fuel gas line (CSA-390-RP-PI-0008) on skid-233 at a minimum flowrate to the Kerosene Stripper (T-0250) to slowly warm up the Crude Fractionator tower (T-0240) the tower overhead equipment and the Kerosene Stripper.
10. Control the Crude Fractionator (T-0240) pressure at the expected normal operating pressure (26 kPag) as the tower system heats up by sending the fuel gas to flare. Periodically check for condensed water in the Fractionator Reflux Drum (V-0255) and drain as necessary.

This document contains confidential and proprietary information and shall not be used except by the expressed written permission of Thermo Design Engineering Ltd.

[redacted]

a) Open: XV-9212 / XV-9214 / XV-9216
b) Close: XV-9211 / XV-9213 / XV-9215

2. Once the preheat train and Prefractionator systems have been heated to the fuel gas normal operating temperature (≥ 10°C) and the Prefrac tower pressure is attained and stable:
   a) stop flowing fuel gas through the preheat train;
   b) Start Crude Feed Pumps (P-0220A/B) and start slowly feeding condensate to the Prefrac tower at approximately 1.5 m3/hr as set by FIC-0219.
3. Continue flowing fuel gas to the bottom of the Prefractionator and maintain pressure control at approximately 200 kPag.
4. Prefrac level control valve, LV-1202, should be maintained in a closed position at this point.
5. Monitor liquid levels in the sump section of the Prefrac tower. The Prefrac tower sump consists of 3 compartments; an extended downcomer section where the Tray #20 liquids flow into the tower sump, a center section where the reboiler pump draw and reboiler return are connected, and an overflow section where the Prefrac tower liquid level is controlled with liquids flowing to the Frac tower. Once a liquid level can be seen in the overflow section of the tower sump (LT-1020), this is an indication that the center compartment has reached its normal operating level which is the overflow weir height and the Prefractionator Reboiler Pumps (P-0201A/B) now have sufficient NPSH to allow the pumps to be started.
6. Adjust the flowrate to the Prefrac tower by manipulating the flow control setpoint of FIC-0219. The flowrate should be adjusted in order to maintain the liquid level in the centre sump section above the low-low liquid level, LALL-1021. During this period there is no liquid flow out of the tower to the Fractionator and therefore controlling flow into the Prefrac is only required in order to make-up for level losses resulting from vaporization.
7. Start the Prefractionator Reboiler Pumps (P-0201A/B) and allow condensate to circulate through the reboiler circuit and displace any of the vapour in the equipment and piping. Allow sufficient time for liquid levels in the Prefrac sump to stabilize before proceeding to the next step.
8. Start the Prefrac Reboiler (H-0201A) and slowly heat-up the Prefrac tower system by recirculating condensate through the reboiler back to the tower;
   a) Run the reboiler with minimal heat input by adjusting fuel gas rate to burners;

This document contains confidential and proprietary information and shall not be used except by the expressed written permission of Thermo Design Engineering Ltd.

b) Operate heater with a 100 -120°C stack temperature for a period of 2 hours in order to avoid any abrupt vaporization of water in the system that could take place during temperature ramp stage.

c) Slowly Increase return temperature (TT-6014A) to the minimum level which will generate vaporization. Although there is no direct indication of vaporization beginning to occur in the return piping, the following can be used as a guide:

i. Local monitoring of the tower temperature profile (TIT-8001A/B/C/D/E). As vapour progresses upwards through the tower the temperatures will have a corresponding increase.

ii. Flowrate trend as indicated by FT-0013. When vaporization begins to occur, the actual volumetric flowrate through the reboiler circuit will increase quickly causing increased pressure drop. Subsequently due to the increased system pressure drop, the Prefrac Reboiler Pumps (P-0201A/B) will run further back on their curve at a lower flowrate.

d) Based on an assumed start-up condensate composition it is estimated that vapourization will begin to occur in the temperature range of 85°C to 115°C.

9. Heat-up the Prefrac system in increments of approximately 25°C. As the temperature increases, start reducing the fuel gas rate to the bottom of the Prefrac tower until the pressure can be maintained and stabilized with just the vapour generated from the Prefrac Reboiler.

10. Once pressure is maintained in the Prefrac tower by the flash vapour from the reboiler, a steady flow from the Crude Feed Pumps (P-0220A/B) should be introduced into the Prefrac. A flow setpoint of approximately 1.5 m3/hr is recommended.

11. Condensate can now start to flow to the Fractionator Flash Drum (V-0235) by slowly opening the Prefrac bottoms level control valve, LV-1202, once all of the following have been established:

a) The liquid level on both sides of the Prefrac bottoms baffle is established;

b) There is enough pressure at the bottom of the Prefrac tower to flow liquid into the Flash Drum (approximately 200 kPag)

c) The Crude Frac system, including the Flash Drum and overhead Reflux Drum, have reached the fuel gas temperature of at least 10°C;

d) The Prefrac bottoms temperature is between 85°C and 115°C.

12. Once level is established in the Flash Drum, start the Fractionator Feed Pumps (P-0235A/B). Slowly start pumping condensate through the shellside of Fractionator Feed/Residue Exchanger (E-0235) the Crude Feed Heater (H-0235) the Steam Superheater (E-0240) and then into the bottom of the Crude Fractionator. The Flash Drum liquid level must be high enough (> LALL@152mm) to provide the required NPSH for the pump.

a) Do not startup the Heater (H-0235) at this time;

This document contains confidential and proprietary information and shall not be used except by the expressed written permission of Thermo Design Engineering Ltd.

[redacted]

b) Control the Flash Drum level with the Prefrac bottoms level valve LV-1202;

c) Continue controlling the Flash Drum and Crude Frac pressures and the water in the Fractionator Reflux Drum boot.

d) At this point the Flash Drum pressure can be slowly increased to the normal operating pressure of 241 kPag by slowly closing the Flash Drum back pressure control valve, PV-3209. Once pressure setpoint has been achieved, PIC-3221 and PIC-3209 can be placed in auto to control Flash Drum pressure.

13. When sufficient level is established in the bottom of the Crude Frac tower (> LALL@152 mm) to provide the required NPSH for the Residue Bottoms Pumps (P-0240A/B) start pumping the bottoms liquid through the Steam Superheater (E-0240), Fractionator Feed / Residue Exchanger (E-0235), Feed/Residue Exchanger (E-0225) and then out to Atmospheric Residue Storage Tank (TK-0220). Change the setpoint temperature for the electrical tracing on the pump discharge piping. The temperature is defined based on the fluid moving through as it could be much lighter than the normal Residue product at this time. The Residue product will be set to be maintained at 65°C.
14. Once the Prefrac bottoms temperature reaches 150°C, do not increase the temperature any further. Maintain the temperature.
15. After the overhead temperature of the Prefrac tower reaches about 130°C, with the Prefrac bottoms temperature at 150°C, start condensing the overhead vapor by turning on the Prefractionator Condenser, AC-0202.
    a) **NOTE: This condenser has a mechanical design temperature of 150°C, so it is important that cooling starts at an overhead temperature no higher than 130°C.**
16. Ensure there is no water in the Prefrac Reflux Pump, P-0202, or the associated piping prior to progressing to the next step.
17. Once the hydrocarbon level in the Prefrac Reflux Drum is established, start the Prefrac Reflux Pump, P-0202, and run the Prefrac tower on total reflux. The level must be high enough to provide the required NPSH for the pump (> LALL@ 203 mm).
18. Drain the water from the Prefrac Reflux Drum water boot as required.
19. Run the Prefrac column on total reflux ratio to establish liquid level on top trays.
20. Keep maintaining the Prefrac bottoms temperature at 150°C.
21. After the overhead temperature of the Crude Frac column reaches about 130°C:
    a) start condensing the overhead vapor by turning on the Fractionator Condenser, AC-0202;
    b) open the inlet valve, LV-1212, from the Crude Frac to the Kerosene Stripper. This will allow any potential accumulation of water in the inlet piping to drain through to the stripper.

This document contains confidential and proprietary information and shall not be used except by the expressed written permission of Thermo Design Engineering Ltd.

22. Once the hydrocarbon level in the Fractionator Reflux Drum is established, start the Fractionator Reflux Pumps, P-0255A/B, and run the Crude Frac column on total reflux. Maintain the level control valve to storage, LV-1226, in the closed position and control liquid level in the reflux drum by adjusting the travel of reflux control valve, FV-0211.
23. Drain the water from the Fractionator Reflux Drum water boot as required.
24. Run the Crude Frac tower at total reflux ratio to establish liquid level on trays.
25. Once level has been established in the Kerosene Stripper the level valve, LV-1212, can be closed to prevent high level.
26. A liquid level on the tower trays has been established once the liquid level in the Diesel Stripper starts increasing. Ensure Diesel Product Pumps (P-0245A/B) and connected piping is free of water. Once there is sufficient liquid level in the diesel stripper (> LALL@ 152 mm), start the Diesel Product Pumps (P-0245A/B). At this point the flow control valve, FV-0214, regulating diesel flow to storage should be maintained in the closed position.
27. Control the level in the Diesel Stripper by recycling liquid to the Crude Frac tower through the overflash control valve, FV-0209. The level should be high enough (> LALL@152mm) to provide the required NPSH for the pump. Since the liquid temperature is cold at this time, do not send the liquid to the preheat train.
    a) NOTE: The Diesel Pumps (P-0245A/B), or the Residue Product Pumps (P-0240A/B) may not be able to pump out at the flowrate that the reflux is coming down the tower. If the level in either the Diesel Stripper or the Crude Frac bottom continues to increase at the pumps' maximum flowrate, reduce the feed rate to the Crude Frac tower and reduce the reflux flowrate accordingly to maintain the total reflux ratio.
    b) Monitor the liquid levels in the Flash Drum and the Prefrac tower bottom. Adjust the Prefrac bottom level control valve, LV-1202, to maintain the Flash Drum level. Adjust the Condensate flowrate into the unit to control the Prefrac tower bottom level.
28. When it has been established that the trays in both the Prefrac and the Crude Frac towers have established a liquid level, slowly increase the Prefrac bottoms temperature to 215°C. Maintain the Prefrac bottom temperature at this value.

This document contains confidential and proprietary information and shall not be used except by the expressed written permission of Thermo Design Engineering Ltd.

a) Note: The Flash Drum and Crude Frac bottoms temperature should line out at temperatures approximately 5°C to 15°C cooler than the Prefrac Bottoms. After starting the reflux pumps on both towers, the towers will start dropping in temperature. If the bottoms temperatures of either tower lines out to values lower than the targets stated after the reflux starts, both the heat input from the Prefrac Reboiler and the Condensate feed rate to the unit will need to be increased. Duties of both overhead condensers could also be reduced but the towers should be maintained in total reflux.

29. Once both towers have stabilized, controllers can be placed in auto as deemed appropriate by operations.
30. Off gas from the Prefractionator Reflux Drum (V-0202) can be sent to the VRU via PV-3013 to control the Prefrac tower overhead pressure. FG is cycled through the VRU via PV-3270 in order to warm up the VRU. Fuel gas will flow until sufficient pressure is created through the off-gas connections.

This document contains confidential and proprietary information and shall not be used except by the expressed written permission of Thermo Design Engineering Ltd.

[redacted]

3.3.2.3.3.3 Introduce Crude Oil Feed

1. Begin adding crude oil to the Condensate Storage Tank (TK-601A).
2. Monitor bulk density of blended feed using density indicator, DI-0218.
3. Continue to blend oil into the feed tank until the standard bulk density of the feed is in the normal operating range of 780 kg/m3 to 825 kg/m3.
4. Note: At this point both towers are operating in total reflux and all crude oil being pumped to the Prefrac tower is passing through to the Frac tower and then is pumped to storage via the Residue Product Pumps (P-0240A/B). During the subsequent steps, the feed rate to the Prefrac / Frac is ramped up and levels in the sump of the Crude Fractionator (T-0240) should be carefully monitored during this period to ensure liquid accumulations do not exceed the pumping capacity (3.77m3/hr) of the Residue Product Pumps (P-0240A/B). Once the tower achieves normal operating temperatures (310°C Bottoms, 140°C Top) and the Naphtha, Kerosene, and Diesel draws are established, the required pumping rate of the Residue Product Pumps (P-0240A/B) is significantly reduced.
5. Transition operation of the Diesel Stripper (T-0245) from a total recycle arrangement through the overflash control valve, FV-0209, to the normal mode of flow control to storage via flow control valve, FV-0214. Warm the shellside of the Feed/Diesel Exchanger (E-0230) and the Diesel Cooler (AC-0245) by slowly opening flow control valve FV-0214. Gradually transition the overflash flowrate to its normal operating point by placing FIC-0209 in auto and at its normal setpoint of 0.54 m3/hr.
6. Operations to monitor liquid levels in the sump of the Crude Fractionator (T-0240) and make any required rate adjustments to the diesel draw utilizing FIC-0214. If liquid levels in the sump of the Crude Fractionator increase above the normal operating point, FIC-0214 setpoint can be increased to pull more liquids from the diesel draw which will in turn reduce the required pumping capacity of the Residue Product Pumps (P-0240A/B).
7. Slowly increase flowrate to the Prefrac to 9.0 m3/hr (~60% of normal flow) utilizing flow controller, FIC-0219. Flowrate must be increased to the point that the low flow shutdown (FALL-0225@8.5 m3/hr) has been cleared on the Crude Feed Heater (H-0235).
8. If the Prefrac system pressure can be maintained, start cutting back on the fuel gas flowrates until no more fuel gas flows into the Prefrac system.
9. Adjust the Prefrac operation to:
    a) Maintain the Prefrac tower bottom at approximately 215 °C;
    b) Keep the overhead from the tower less than or equal to 130 °C;
    c) Maintain levels in the bottom of the Prefrac tower and in the Prefrac Reflux Drum;
    d) Keep the Prefrac tower operating at total reflux.
10. Once the bottoms temperature of the Prefrac tower has stabilized at approximately 215°C, startup the Crude Feed Heater (H-0235).

This document contains confidential and proprietary information and shall not be used except by the expressed written permission of Thermo Design Engineering Ltd.

approximately 285°C (maximum temperature ramp rate of 50°C per hour). Maintain that temperature and start to heat-up the Crude Frac tower. Keep the tower at total reflux.

12. If the Crude Frac system pressure can be maintained, start cutting back on the fuel gas flowrates until no more fuel gas flows into the Crude Frac system. Start sending off gas from the Fractionator Reflux Drum to the VRU to control pressure via PV-3218.
13. Slowly increase the pressures on the Prefractionator (T-0201) (P@296kPag bottoms), Flash Drum (V-0235) (P@241 kPag) and Crude Fractionator (T-0240) (P@124kPag bottoms) to normal operating values. Line out and stabilize the operation at this point.
14. Increase the Prefrac bottom temperature to the normal operating temperature of about 226°C.
15. Adjust the Prefrac operation to:
    a) Maintain the Prefrac tower bottom at approximately 226°C;
    b) Keep the overhead from the tower less than or equal to 130°C;
    c) Maintain levels in the bottom of the Prefrac tower and in the Prefrac Reflux Drum;
    d) Keep the Prefrac tower operating at total reflux.
16. Once the Prefrac bottom temperature is stable at approximately 226°C, slowly and incrementally increase the outlet temperature of the Crude Feed Heater (H-0235) to the normal operating temperature of approximately 343°C (maximum temperature ramp rate of 50°C per hour). Maintain that temperature and start to heat-up the Crude Frac tower. Keep the tower at total reflux.

    Note: Depending on variability in plant feedstock it may be desirable to optimize system energy efficiency by controlling heater outlet temperature based on the total summation flowrate of diesel overflash plus reflux flowrate. Higher heater outlet temperatures will result in increased reflux rates and depending on properties of feedstock may result in higher reflux rates than required (energy inefficiencies).
17. Start injection of pH neutralizer into Frac tower overheads system. Monitor pH levels through manual sampling (SP-0215) and adjust injection rates as required. Rate to be manually adjusted to target of 4.6L/day to reach desired pH level (pH = 6.0 to 6.5) to a maximum of 300L/day injection rate.
18. When the kerosene draw (tray #9) in the Crude Frac tower reaches a temperature of approximately 180°C via TIT-6205, slowly open valve LV-1212 and start flowing liquid from the Crude Frac tower to the Kerosene Stripper (T-0250).
19. Dryout steam supply header by flowing steam to safe location via SK-232 steam utility station. Flow for a sufficient duration to allow header to flow dry steam.

This document contains confidential and proprietary information and shall not be used except by the expressed written permission of Thermo Design Engineering Ltd.

20. Start flowing LP steam through the Steam Superheater (E-0240) (F@ 377 Sm3/hr) and to the bottoms of the Crude Frac (T-0240) (F@ 295 Sm3/hr), Diesel Stripper (T-0245) (F@ 40 Sm3/hr), and Kerosene Stripper (T-0250) (F@ 41 Sm3/hr). The steam flowrates to each destination should be approximately 70% to 80% of normal flow.
21. Start the Fractionator Produced Water Pumps (P-0260A/B) once a water interface level has been established in the Fractionator Reflux Drum. Water Interface level controller, LIC-1224, can be placed in auto to maintain interface level.
22. Warm the shellside of the Feed/Kerosene Exchanger (E-0220) and the Kerosene Cooler (AC-0250) by slowly opening flow control valve FV-0213 and directing kerosene to storage. Once equipment has reached operating temperature, place flow controller FIC-0213 in auto with a setpoint of approximately 60% of normal (F@3.9m3/hr). Kerosene Stripper level controller, LIC-1212A can be placed in auto.
23. Once the Prefrac operation has stabilized and the temperature profile in the Crude Frac tower has lined-out and no longer increases, increase the Crude Oil flowrate into the Crude Fractionator Tower (T-0240) to approximately 90% of normal operating flowrate (F@4.5m3/hr at Fractionator Feed Pumps (P-0235A/B)).
24. Stabilize the operation of the unit with both towers operating at total reflux ratio.

This document contains confidential and proprietary information and shall not be used except by the expressed written permission of Thermo Design Engineering Ltd.

[redacted]

3.3.2.3.3.4 Bring the unit to the desired operating conditions

1. Once the unit has stabilized at total reflux, the reflux ratios can be adjusted to normal operating conditions (Crude Fractionator reflux ratio = 2.57).
2. Begin flowing lift naphtha from the Prefrac Reflux Drum (V-0202) to the Crude Frac Flash Drum (V-0235) by adjusting flow controller FIC-0202 setpoint to 0.73 m3/hr.
3. Transition Prefrac tower from total reflux to partial reflux by beginning level control of light naphtha to storage through LV-1228.
4. Transition Frac tower from total reflux to partial reflux by beginning level control of heavy naphtha to storage through LV-1226.
5. Start injection of H2S scavenger into the naphtha rundown line. Rate to be manually adjusted to target of 11.4L/day to each desired pH level to a maximum of 300L/day
6. Any controllers not already set to automatic can be set to automatic as deemed necessary by plant operating personnel at this time.
7. Once the plant has stabilized adjust all controller setpoints to normal operating values and increase the Crude Oil flow rate to 100% normal flow (F@14.7m3/hr).
8. The control system, if tuned properly, should line out the unit to normal operation.
9. Once the units have stabilized, products can be sampled to verify compliance with desired specifications. When products are determined to be on spec by onsite testing, the naphtha, kerosene, and diesel products can be directed to their respective storage tanks by positioning off-spec valves as follows:
   a. Close: XV-9212 / XV-9214 / XV-9216
   b. Open: XV-9211 / XV-9213 / XV-9215

   Reference Section 3.6 of *Process Design Basis Document: CSA-000-PR-DB-0001* for a complete list of target product specifications.

   Off-spec runtime will greatly varying depending on crude feed composition and determining correct corresponding product specification flowrates.

This document contains confidential and proprietary information and shall not be used except by the expressed written permission of Thermo Design Engineering Ltd.

3.3.2.4 Vapour Recovery Unit

3.3.2.4.1 Overview

Off-gas from the Prefrac and Frac tower is directed to the vapour recovery unit (VRU). The overheads gas from the Prefrac and Frac is rich in liquids and the VRU is utilized to compress and cool this gas and to condense a significant portion of NGL liquids in the suction and discharge scrubbers. These recovered NGL liquids are then directed to the existing Plant 1 Stabilizer.

In the current configuration, the remaining compressed gas from the VRU is directed to flare. There is a provision (tee, valve, and associated piping) to allow this compressed off-gas to be directed back into the process rather than to flare.

3.3.2.4.2 Start-up Procedure

For start-up procedures related to the Vapour Recovery Unit refer to the following NEXT Compression document:

- PN49393 – PLC Compressor Control Panel PN49393 Operating Philosophy

This document contains confidential and proprietary information and shall not be used except by the expressed written permission of Thermo Design Engineering Ltd.

[redacted]

3.3.3 Normal Operation

3.3.3.1 General Comments

The key to stable plant operation is through careful monitoring of product quality. Excessive product that does not meet the desired specifications can be avoided by routine analysis of the feed and product streams. Smooth plant operation is achieved by maintaining a consistent feed composition and flow rate. Once the plant operating parameters are established for a given inlet feed composition and flow rate, consistent product quality should be achieved with ease. It is useful to do a preliminary material balance based on the feed stream to the plant if the feed stream will change. This material balance will be helpful in determining the controller set points throughout the plant and will establish initial plant operating parameters much more quickly.

During normal plant processing, efficient operation of the plant will be maintained by the control system. Operators will be required to monitor the system and react to any changes that occur. Charting trends in process variables will aid operators to determine maintenance plans. A walk-through of the plant should be completed several times per shift, recording pressures and temperatures and looking for abnormalities. The simplest and one of the best condition monitoring techniques are the four human senses (look, listen, feel, and smell). Machinery conditions such as visible wear on components, abnormal vibration levels from rotating equipment and oil lubrication levels are some of the basic monitoring tasks that can be performed by operators. Skilled maintenance engineers may not be always available so it is important for the operators to be well trained to spot problems and deal with them effectively.

The best method for preventative maintenance is to keep a record log and to monitor the process trends. All of the pressures, temperatures, and levels that are not automatically recorded by the instruments should be manually recorded. The operators should keep a list of all recommended normal operating pressures, temperatures, pressure drops, etc. so that they can be compared to the daily-recorded measurements. Any noticeable deviations between the normal and recorded measurements should be investigated and corrected. It is also a good idea to develop spreadsheets to store the information gathered. This makes finding and noticing trends and analyzing patterns much easier. Good record keeping is a great asset to the operator or trouble-shooter. Routine preventive maintenance is good insurance against shut downs and malfunctions.

- During normal operation, recheck all control loops to ensure set points are entered correctly and all controllers are in automatic mode.
- Continue to monitor pressure, differential pressures, temperatures, differential temperatures and flow rates to determine any unusual operation. Take trends of key operating parameters regularly. These trends will be instrumental when diagnosing and troubleshooting abnormal operation.

This document contains confidential and proprietary information and shall not be used except by the expressed written permission of Thermo Design Engineering Ltd.

3.3.4 Shutdown

3.3.4.1 General Comments



In Crude units, pyrophoric iron sulfides are formed on piping and equipment surfaces as part of the corrosion process from sulfur compounds in the Crude Oil. After shutdown special consideration must be given that Pyrophoric materials will self-ignite upon short exposure to air under ordinary atmospheric conditions. The oxidation process releases a tremendous amount of heat generating hot spots which could ignite fuel sources such as residual oil or hydrocarbon gases that are not adequately removed during draining and steaming and which may remain in the equipment and piping. Fires and explosions have occurred in refineries due to this phenomenon. Heat generation can be high enough to support a metal packing fire. These incidents are not uncommon. In addition, sulfur dioxide and hydrogen sulfide may also be formed. Note that SO2 gas forms white smoke and is often mistaken for steam instead of being an indicator of a pyrophoric fire.

Mitigation strategies include:

1. Removal of residual oils and hydrocarbon gases:

a) Circulation of a naphtha-like solvent to simultaneously cool and remove heavy oils

b) Steam-out

c) Hot water wash

d) Cold water wash

2. Removal of iron sulfide corrosion products

Acidification, permanganate oxidation, and chemical neutralization are some of the methods used to remove the iron sulfide corrosion products.

The risks of a potential pyrophoric fire should be evaluated. Mitigation strategies should be developed, implemented and included within this procedure before opening the equipment and piping to the atmosphere during a shutdown. These mitigation strategies are not developed here.



Procedures to mitigate potential polythionic acid stress corrosion cracking of equipment and piping when exposed to water or atmospheric air during shutdown is not part of this project scope. Polythionic acid normally forms in refinery equipment by the reaction of oxygen and water with sulfide corrosion products on the internal surfaces of piping and equipment. When this combination of reactants occurs on sensitized austenitic stainless steel and other austenitic alloy process equipment, cracking may propagate through the wall thickness of piping and components in a matter of minutes or hours. It is recommended to review the potential for polythionic acid stress corrosion cracking. Based on that review, if required, mitigating strategies should be developed, before opening the equipment and piping to the atmosphere during a shutdown. See API-571 and NACE Standard RP0170 for further information.

This document contains confidential and proprietary information and shall not be used except by the expressed written permission of Thermo Design Engineering Ltd.

[redacted]

3.3.4.2 Prefractionation & Fractionation Unit Normal Stop Sequence

3.3.4.2.1 Reduce feed rate

1. Slowly reduce the Crude Oil flowrate to the minimum turndown.
2. If properly tuned, the control system should be able to handle the reduced flowrate while in automatic mode.
3. During the course of this procedure, controllers should be placed in manual mode as deemed appropriate and necessary by the operator.

3.3.4.2.2 Reduce heating and cooling sources

1. Slowly reduce the duty of Prefrac Reboiler, H-0201A, by reducing the fuel gas to the burners to as low a flowrate as possible.
2. As the Prefrac column cools, maintain normal operating pressure by flowing fuel gas to the bottom of the Prefrac column as required.
3. Maintain reflux down the Prefrac column at normal flowrate to help cool the column. Continuously monitor the hydrocarbon level in the Prefrac Reflux Drum. As the column cools at constant reflux rate, the level will continuously decrease with Naphtha flow to storage decreasing. Stop flowing Naphtha Make-up to the Crude Frac Flash Drum.

   NOTE: If during the course of the shutdown the hydrocarbon level in the Prefrac Reflux Drum cannot be controlled at a level to maintain the required NPSH for P-0202 (LV-1228 essentially closed), try reducing the reflux flowrate down the column. If that does not maintain the required level, close LV-1228 completely and recirculate the pump flow through the spillback loop to maintain the level just above that needed for NPSH. The reflux to the column and flow to storage may need to be re-started later if the hydrocarbon level increases.
4. Send water from the Prefrac Reflux Drum water boot to the Sour Water Flash Vessel as necessary during the course of this shutdown procedure.
5. Slowly reduce the duty of the Crude Feed Heater, H-0235, by reducing the fuel gas to the burners to as low a flowrate as possible.

   NOTE: The flowrate through the heater needs to be such that two-phase, vapor/liquid, slug flow does not occur in either the heater coils or the exit piping from the heater. The velocity at which that occurs needs to be determined and the Crude Oil flowrate should be increased to keep the velocity above the slug flow velocity.
6. As the Crude Frac column cools, maintain normal operating pressure by flowing fuel gas to the Fractionator Reflux Drum, V-0255, as required.
7. Maintain reflux down the Crude Frac column at normal flowrate to help cool the column. Continuously monitor the hydrocarbon level in the Crude Frac Reflux Drum. As the column cools at constant reflux rate, the level will continuously decrease with Naphtha flow to storage decreasing.

This document contains confidential and proprietary information and shall not be used except by the expressed written permission of Thermo Design Engineering Ltd.

cannot be controlled at a level to maintain the required NPSH for P-0255 (LV-1226 essentially closed), try reducing the reflux flowrate down the column. If that does not maintain the required level, close LV-1226 completely and stop the reflux pump. The pump may need to be re-started later if the hydrocarbon level increases.

8. Send water from the Crude Frac Reflux Drum water boot to the Sour Water Flash Vessel as necessary during the course of this shutdown procedure.
9. Transfer the bottom liquid from the Prefrac column to the Fractionator Flash Drum, V- 0235, by controlling the Prefrac bottom level at a low liquid level.

3.3.4.2.3 Stop feed

1. Slowly bypass the Crude Oil feed around the Prefrac column and flow directly into the Crude Frac Flash Drum. The Crude Oil flowrate can be reduced to minimum 8.5 m3/hr (FALL-0225 setpoint)
2. Once the liquid level on the reboiler side of the Prefrac bottom baffle is reached, LALL-1021, shutdown the Prefrac Reboiler and the Prefrac Reboiler Pumps.
3. If the reflux down the Prefrac column is still occurring, stop refluxing down the Prefrac column and reduce the Reflux Drum level by sending Naphtha to storage. If the pump is in spillback mode and a hydrocarbon level has built-up in the Prefrac Reflux Drum, stop the spillback and reduce the Reflux Drum level by sending Naphtha to storage. When the level reaches the pump's NPSH requirement, turn off the pump.
4. Shutdown the Prefractionator Condenser, AC-0202.
5. Continue to maintain pressure and cool the Prefrac column system with fuel gas.
6. Control the level in the Crude Frac Flash Drum, V-0235, at the minimum required to maintain the required NPSH for the Fractionator Feed Pump, P-0235 (>LALL=152 mm).
7. Once the Crude Frac bottom temperature reaches 285°C, steam to the Kerosene Stripper, Diesel Stripper and Crude Frac bottom can be stopped.
8. Send fuel gas to the Kerosene and Diesel Strippers. Control column pressure as required.
9. Stop flowing fuel gas to the Crude Feed Heater burners. Crude Oil feed should continue flowing.
10. At this point, the Crude Frac column may still be hot enough to generate overhead vapors that can be condensed. Maintain reflux down the Crude Frac column at normal flowrate to help cool the column. Continuously monitor the hydrocarbon level in the Crude Frac Reflux Drum. As the column cools at constant reflux rate, the level will continuously decrease with Naphtha flow to storage decreasing.

    NOTE: If during the course of the shutdown the hydrocarbon level in the Crude Frac Reflux Drum cannot be controlled at a level to maintain the required NPSH for P-0255 (LV-1226 essentially closed), try reducing the reflux flowrate down the column. If that does not maintain the required level, stop the reflux pump. The pump may need to be re-started later if the hydrocarbon level increases.

This document contains confidential and proprietary information and shall not be used except by the expressed written permission of Thermo Design Engineering Ltd.

11. Once the temperature from the Kerosene draw tray reaches about 170°C, bypass the Kerosene around the Feed / Kerosene Exchanger, E-0220.

    NOTE: If the Crude Frac Reflux Pump has been stopped, or its flowrate greatly reduced, the Kerosene Stripper level may not be able to be maintained above that required for the Kerosene Pump NPSH. In that case, stop the Kerosene Pump, P-0250.

12. Once the temperature from the Diesel draw tray reaches about 100°C, stop Diesel flow to the Feed / Diesel Exchanger, E-0230, and increase the Diesel flowrate through the Overflash line to the bottom of the Crude Frac tower.

    NOTE: If the Crude Frac Reflux Pump has been stopped, or its flowrate greatly reduced, the Diesel Stripper level may not be able to be maintained above that required for the Diesel Pump NPSH. In that case, stop the Diesel Pump, P-0245.

13. Stop the flow of Crude Oil into the unit and stop Fractionator Feed Pump, P-0235.
14. Stop flowing residue to storage and place the Residue Product Pump, P-0240, in minimum flow spillback mode. Recirculate the Residue Product back to the Crude Frac column.
15. If not already stopped, stop the Diesel and Kerosene pumps.
16. Shutdown the Diesel and Kerosene coolers.
17. If not already stopped, stop the Crude Frac reflux pump.
18. Shutdown the Naphtha Cooler.
19. Shutdown the Fractionator Condenser, AC-0255.
20. Stop the Fractionator Produced Water Pump, P-0260.
21. If not already stopped, shutdown the VRU.
22. Continue to maintain the Crude Frac and Prefrac columns' pressure and cool both columns with fuel gas.
23. Once the temperature from the Crude Frac bottom reaches about 84°C, and if there is appreciable level in the Crude Frac bottom, reduce the level by flowing the Residue product to storage. Once the level in the Crude Frac bottom reaches the minimum required to maintain the NPSH for pump P-0240 (LALL=152 mm), stop the pumps.

This document contains confidential and proprietary information and shall not be used except by the expressed written permission of Thermo Design Engineering Ltd.

3.3.4.2.4 Drain liquids

1. Once fluid temperatures have cooled to about 75°C (including condensed steam from any steam-out), they can be drained to the closed drain system per the plant's Standard Operating Procedure (SOP) for draining equipment.

   NOTE: The mechanical design temperature for the closed drain system is 93 °C.

2. If possible, drain the higher boiling materials first, in order: Residue Product, Crude Oil Feed, Diesel Product, Kerosene Product, Naphtha Product, water containing fluids.

3. As required, procedures to mitigate the potential effects of pyrophoric materials and polythionic acid stress corrosion cracking should be implemented at this point. At no time should any equipment or piping be opened to the atmosphere, or come into contact with air or oxygen, before those mitigating procedures have been completed.

   NOTE: Steam-out may be part of such mitigation procedures.

4. Steam-out of equipment and piping can start according to the plant's steam-out SOP.

5. After steam-out, the condensed liquid will need to be cooled to about 75°C before draining to the closed drain system.

3.3.4.2.5 Reduce pressure to atmospheric pressure

1. Reduce the pressure according to the plant post steam-out SOP.

2. Isolate the unit, if required, according to the plant's isolation policy and procedures.

This document contains confidential and proprietary information and shall not be used except by the expressed written permission of Thermo Design Engineering Ltd.

[redacted]

3.3.4.3 Vapour Recovery Unit Normal Stop Sequence

For the normal stop sequence related to the Vapour Recovery Unit refer to the following NEXT Compression document:

- PN49393 – PLC Compressor Control Panel PN49393 Operating Philosophy

This document contains confidential and proprietary information and shall not be used except by the expressed written permission of Thermo Design Engineering Ltd.

3.3.5 Restart

Restarting the processing units should follow the same steps outlined in the “Start-up Procedures”, in this manual. Clear any ESD or process alarms that may have occurred before or during the shutdown. In general, after a brief shutdown, the necessary utilities should be available and all equipment should be ready, and instrumentation and valves in the correct positions.



All water must be removed from the system before the restart process can begin or before the addition of crude or condensate from a cold start. The high temperatures used in the crude fractionation process can cause rapid vaporization and result in dangerous/damaging pressure spikes. Extra precautions should be taken to ensure that there is no water in system low points and in equipment internals.

This document contains confidential and proprietary information and shall not be used except by the expressed written permission of Thermo Design Engineering Ltd.

UPDATED: January 8, 2020 11:30:48 BY: Tdang

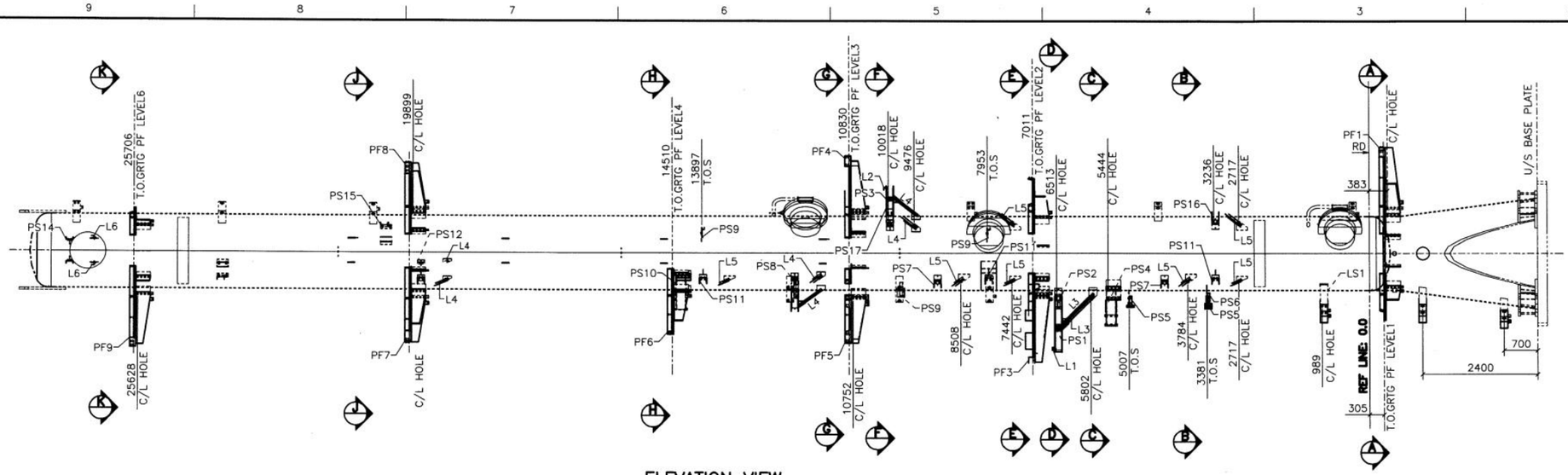

ELEVATION VIEW
(LOOKING WEST)
(HANDRAIL & LADDER NOT SHOWN FOR CLARITY)

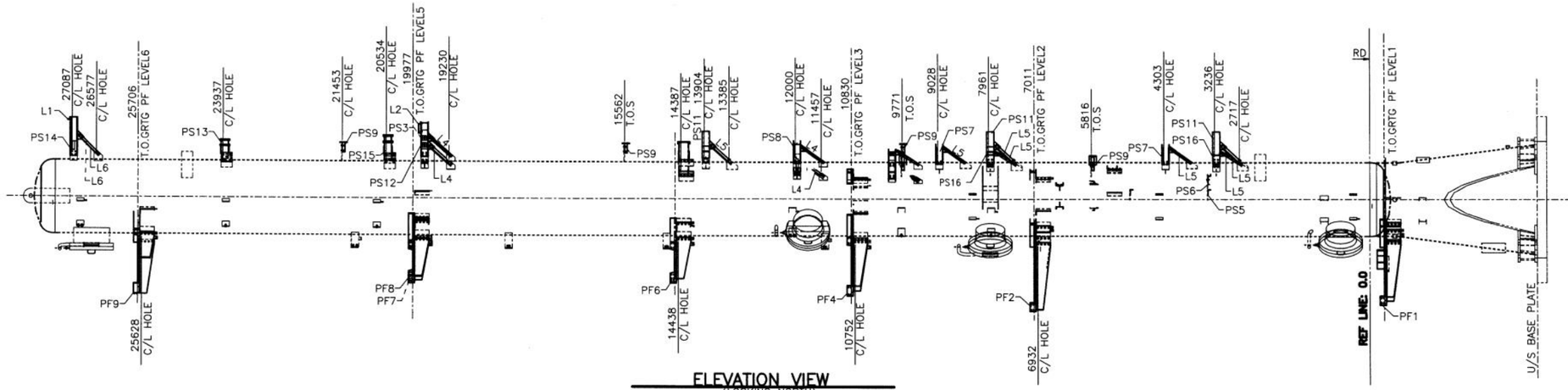

ELEVATION VIEW
(LOOKING NORTH)
(HANDRAIL & LADDER NOT SHOWN FOR CLARITY)

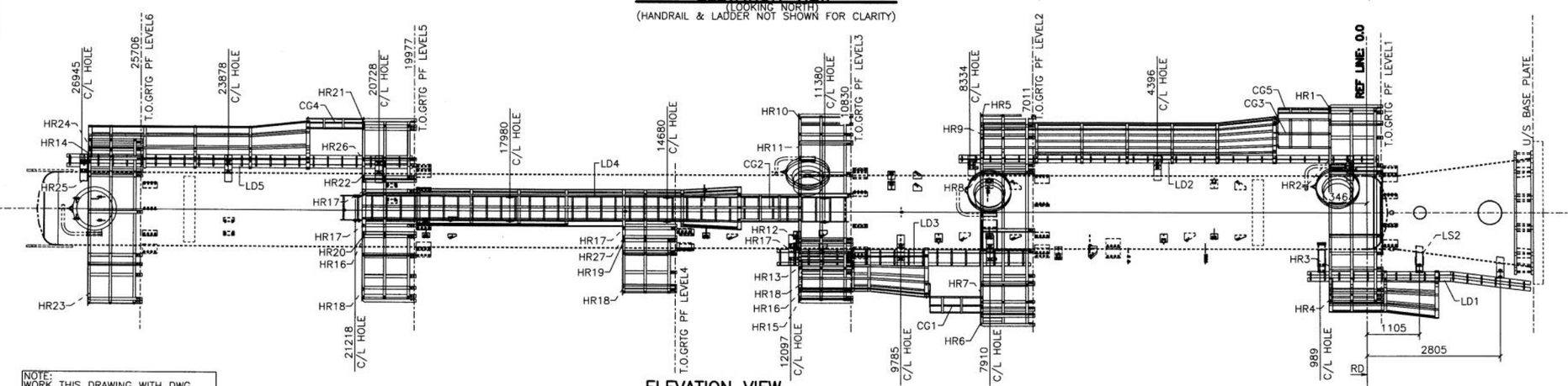

NOTE:
WORK THIS DRAWING WITH DWG
CSA-230-ST-DR-0001-01-02/03

ELEVATION VIEW
(LOOKING WEST)
FOR LADDERS & HANDRAILS LOCATION ONLY

NOTES:

1. SURFACE PREPARATION AND PAINTING:
   DOC NO. TDE-EN-STD-7001 REV.4
   PAINT SYSTEM U-0
   SANDBLAST PER SSPC-SP6;
   PRIMER: N/A
   FINISH: 835 SERIES, 3-5 DFT MILS
   FINISH COLOR:
   - SKID, PLATFORMS, STRUCTURAL SUPPORTS & BOLTINGS ARE STANDARD GREY, RAL 7038
   - LADDERS/CAGES & HANDRAILS ARE SAFETY YELLOW, RAL 1021
2. THE SKID SHALL BE ADEQUATELY SUPPORTED BY PILE FOUNDATIONS DESIGNED BY OTHERS. THE QUANTITY AND LOCATION OF PILES MUST CONSIDER ALL APPLICABLE LOAD COMBINATIONS SUCH THAT ALLOWABLE BEAM DEFLECTION OR STRESS LIMITS ARE NOT EXCEEDED.
3. ALL UNSPECIFIED WELDS TO BE TYPE FL-2 (6mm CONTINUOUS FILLET WELD UNO).
4. WELD GAP APPLIED TO MATERIAL LIST.
5. USE STANDARD WELDING PROCEDURES: WPS-FC1, WPS-SM1.
6. REMOVE ALL WELD SLAG.
7. NDE REQUIREMENTS: MPI FOR LUGS, 100% RT ON SPLICES.
8. REFERENCE TDE STANDARD DWGS AS REQUIRED: TDE-EN-STD-3002.
9. SHIPPING WEIGHT: 7300kg.
10. SHIPPING LIMITS: N/A.
11. UNLESS OTHERWISE INDICATED, SIZE OF HOLES: Ø22 U/N.
12. MATERIAL NOTES: CSA G40.21M
13. TEMPORARY STEEL SHALL BE PAINTED ORANGE AND WILL BE REMOVED AFTER ERECTION.
14. FOR EQUIPMENT LAYOUT SEE DWG No.: CSA-230-PI-LY-0001.
15. WELDS: E49XX

LEGEND:

- WORK POINT
- (PS-XXX) PIPE SUPPORT NO.
- GRATING SPAN
- GRATING OPENING
- MC MOMENT CONNECTION
- PILE LOCATIONS

TYPE: FL-1	TYPE: FL-2
WPS-FC1	WPS-FC1

PRINTED: January 10, 2020 08:16:31 DWG NAME: P:\CSA\Design Drafting\Structural\ST-DR\CSA-230-ST-DR-0001-01-01 Rev0 Crude Fractionator T-0240 _ Elevation Views.dwg

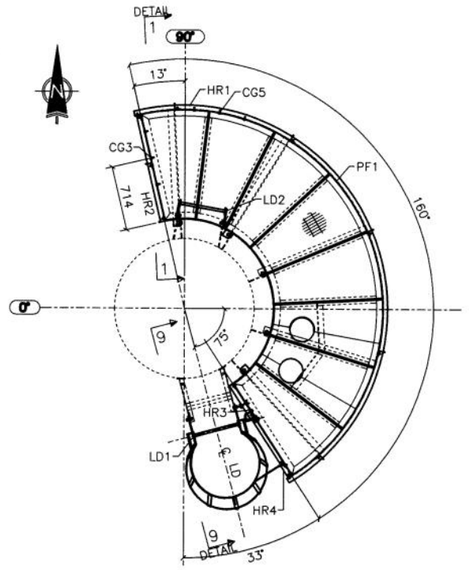

ORIENTATION VIEW A – A
(AT PLATFORM LEVEL 1)

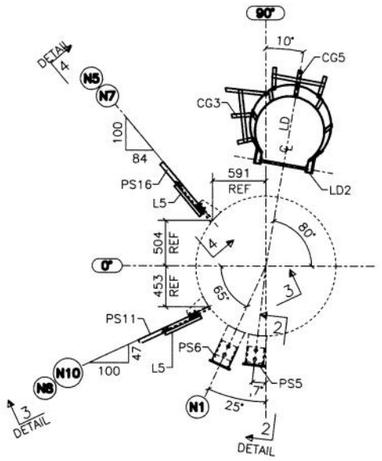

ORIENTATION VIEW B – B

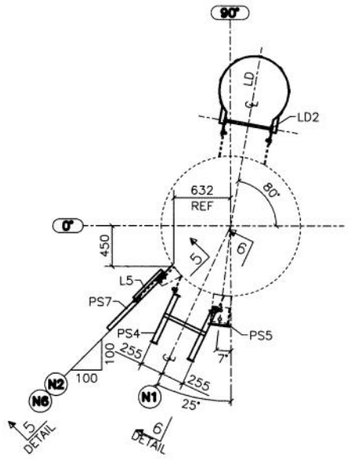

ORIENTATION VIEW C – C

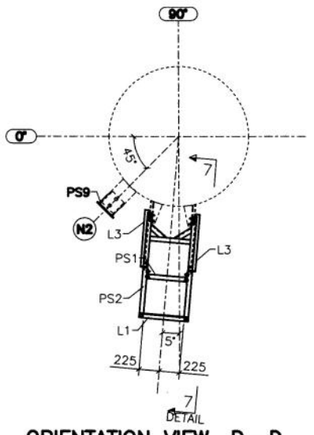

ORIENTATION VIEW D – D

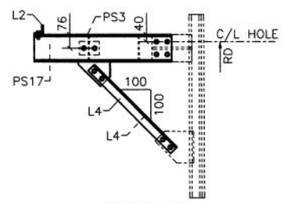

DETAIL 9
(TYP @ PIPE SUPPORT)

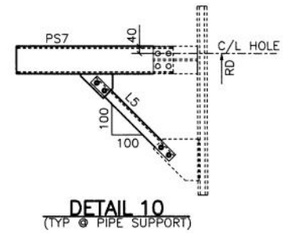

DETAIL 10
(TYP @ PIPE SUPPORT)

NOTES:

1. SURFACE PREPARATION AND PAINTING:
   DOC NO. TDE–EN–STD–7001 REV.4
   PAINT SYSTEM U–0
   SANDBLAST PER SSPC–SP6;
   PRIMER: N/A
   FINISH: 835 SERIES, 3–5 DFT MILS
   FINISH COLOR:
   – SKID, PLATFORMS, STRUCTURAL SUPPORTS & BOLTINGS ARE STANDARD GREY, RAL 7038
   – LADDERS/CAGES & HANDRAILS ARE SAFETY YELLOW, RAL 1021
2. THE SKID SHALL BE ADEQUATELY SUPPORTED BY PILE FOUNDATIONS DESIGNED BY OTHERS. THE QUANTITY AND LOCATION OF PILES MUST CONSIDER ALL APPLICABLE LOAD COMBINATIONS SUCH THAT ALLOWABLE BEAM DEFLECTION OR STRESS LIMITS ARE NOT EXCEEDED.
3. ALL UNSPECIFIED WELDS TO BE TYPE FL–2 (6mm CONTINUOUS FILLET WELD UNO).
4. WELD GAP APPLIED TO MATERIAL LIST.
5. USE STANDARD WELDING PROCEDURES: WPS–FC1, WPS–SM1.
6. REMOVE ALL WELD SLAG.
7. NDE REQUIREMENTS: MPI FOR LUGS, 100% RT ON SPLICES.
8. REFERENCE TDE STANDARD DWGS AS REQUIRED: TDE–EN–STD–3002.
9. SHIPPING WEIGHT: 7300kg.
10. SHIPPING LIMITS: N/A.
11. UNLESS OTHERWISE INDICATED, SIZE OF HOLES: Ø22 U/N.
12. MATERIAL NOTES: CSA G40.21M
13. TEMPORARY STEEL SHALL BE PAINTED ORANGE AND WILL BE REMOVED AFTER ERECTION.
14. FOR EQUIPMENT LAYOUT SEE DWG No.: CSA–230–PI–LY–0001.
15. WELDS: E49XX

LEGEND:

- WORK POINT
- PS–XXX — PIPE SUPPORT NO.
- GRATING SPAN
- GRATING OPENING
- MC — MOMENT CONNECTION
- PILE LOCATIONS

TYPE: FL–1	TYPE: FL–2
WPS–FC1	WPS–FC1
WPS–SM1	WPS–SM1
	E–671N

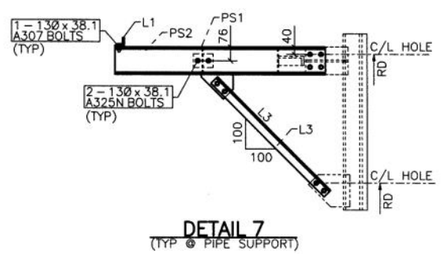

DETAIL 7
(TYP @ PIPE SUPPORT)

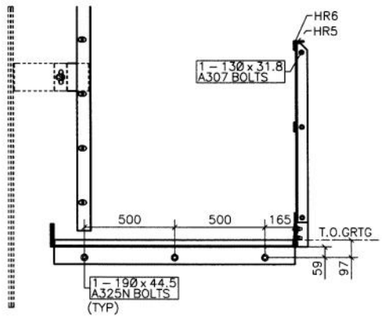

DETAIL 8
(TYP @ PIPE SUPPORT)

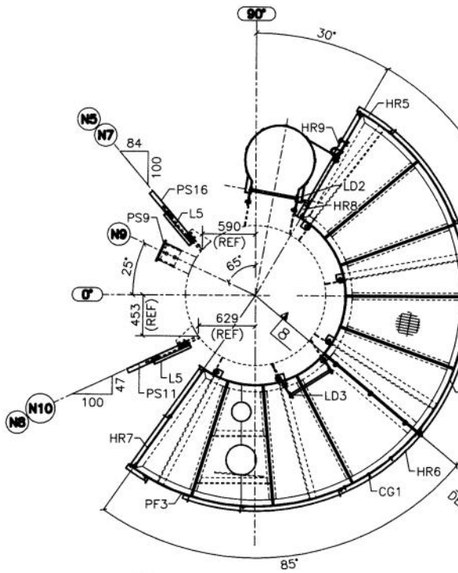

ORIENTATION VIEW E – E
(AT PLATFORM LEVEL 2)

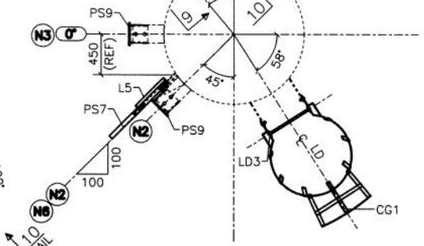

ORIENTATION VIEW F – F

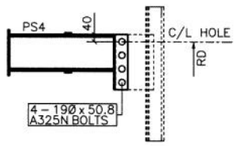

DETAIL 6
(TYP @ PIPE SUPPORT)

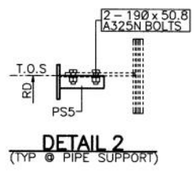

DETAIL 2
(TYP @ PIPE SUPPORT)

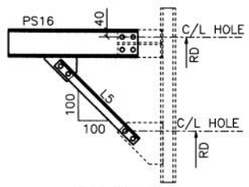

DETAIL 4
(TYP @ PIPE SUPPORT)

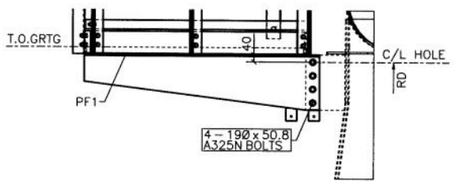

DETAIL U
(TYP @ PLATFORM SUPPORT)

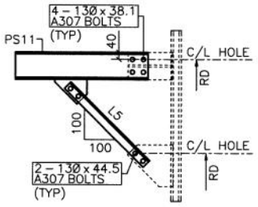

DETAIL 3
(TYP @ PIPE SUPPORT)

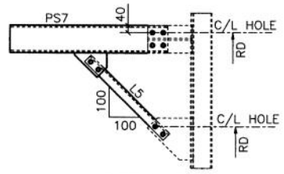

DETAIL 5
(TYP @ PIPE SUPPORT)

NOTE:
WORK THIS DRAWING WITH DWG
CSA–230–ST–DR–0001–01–01/03

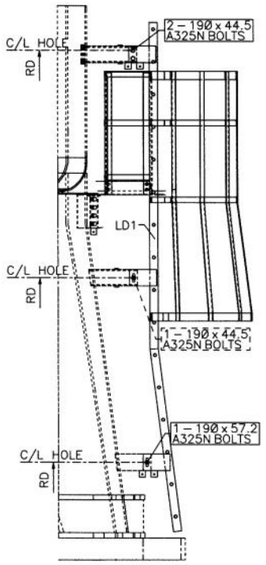

DETAIL 9

UPDATED: January 9, 2020 16:16:31 BY: Tdong
PRINTED: January 10, 2020 08:16:35 DWG NAME: P:\CSA\Design Drafting\Structural\ST-DR\CSA-230-ST-DR-0001-01-02 Rev0 Crude Fractionator T-0240 - Orientation Views.dwg

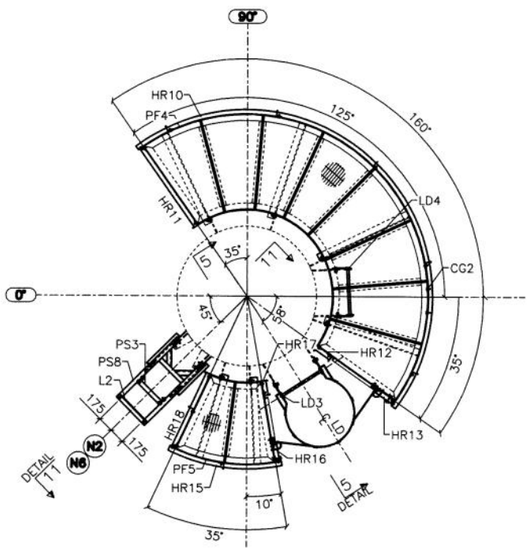

ORIENTATION VIEW G – G
(AT PLATFORM LEVEL 3)

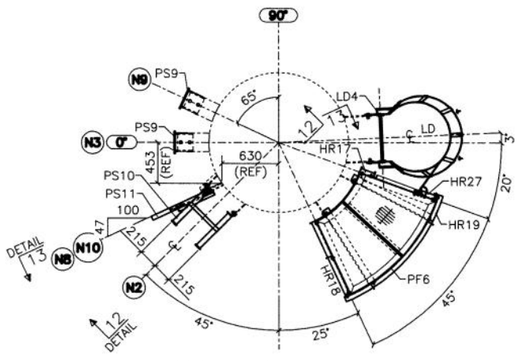

ORIENTATION VIEW H – H
(AT PLATFORM LEVEL 4)

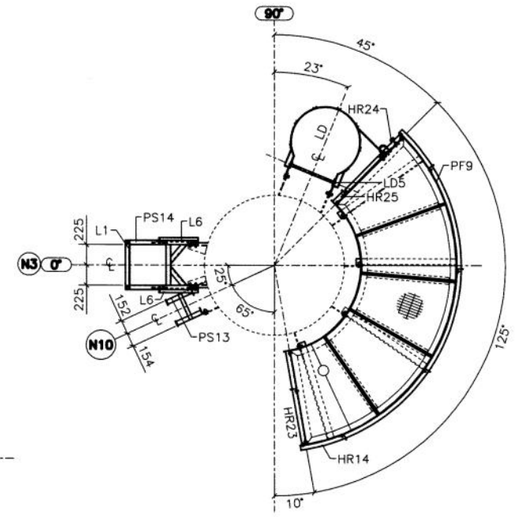

ORIENTATION VIEW K – K
(AT PLATFORM LEVEL 6)

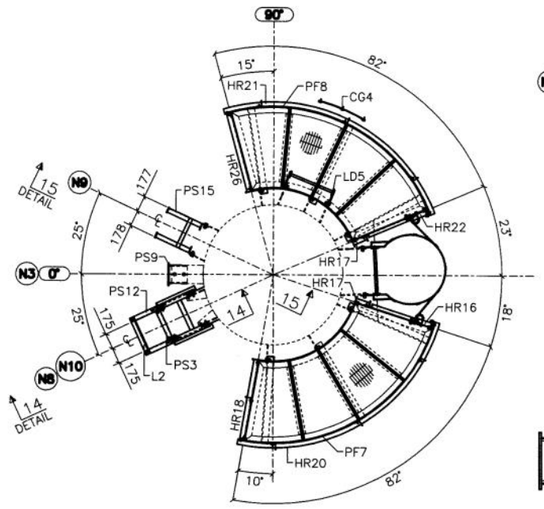

ORIENTATION VIEW J – J
(AT PLATFORM LEVEL 5)

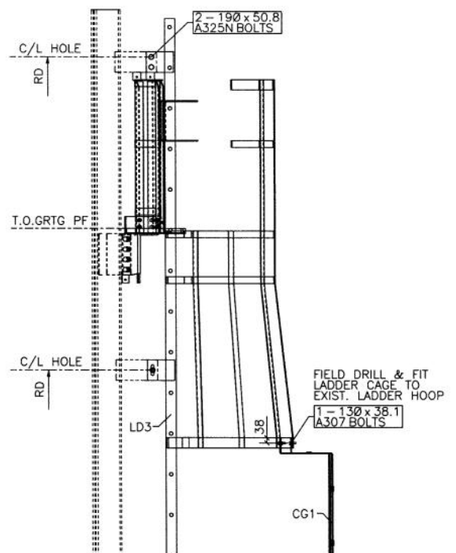

DETAIL 5
(TYP @ LADDER)

DETAIL 12
(TYP @ PIPE SUPPORT)

DETAIL 15
(TYP @ PIPE SUPPORT)

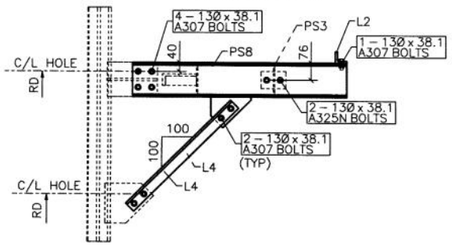

DETAIL 11
(TYP @ PIPE SUPPORT)

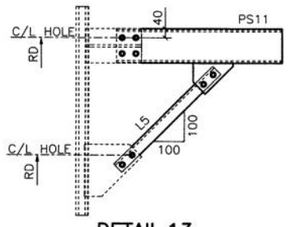

DETAIL 13
(TYP @ PIPE SUPPORT)

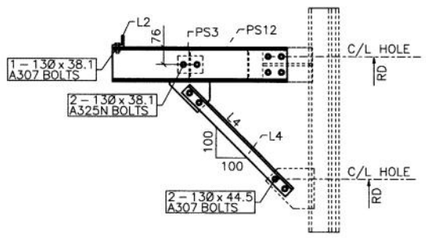

DETAIL 14
(TYP @ PIPE SUPPORT)

NOTE:
WORK THIS DRAWING WITH DWG
CSA-230-ST-DR-0001-01-01/02

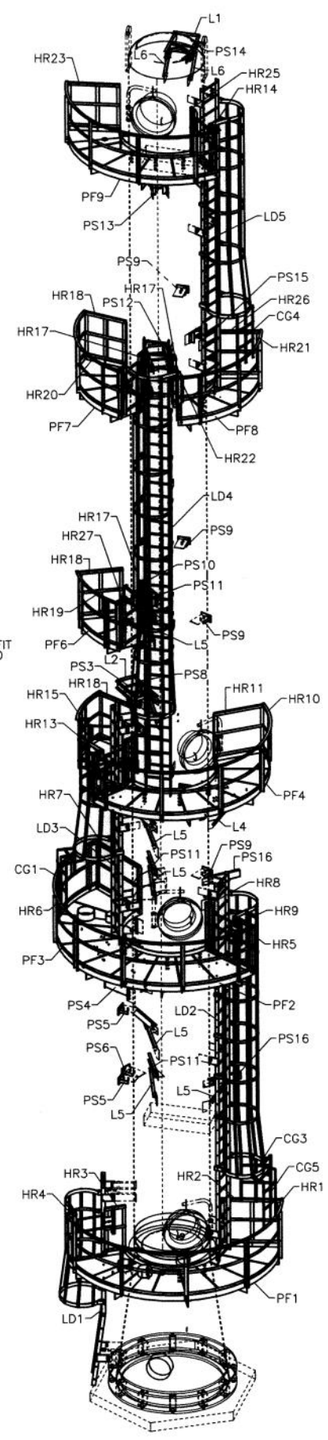

ISOMETRIC VIEW

NOTES:

1. SURFACE PREPARATION AND PAINTING:
   DOC NO. TDE-EN-STD-7001 REV.4
   PAINT SYSTEM U-0
   SANDBLAST PER SSPC-SP6;
   PRIMER: N/A
   FINISH: 835 SERIES, 3-5 DFT MILS
   FINISH COLOR:
   - SKID, PLATFORMS, STRUCTURAL SUPPORTS & BOLTINGS ARE STANDARD GREY, RAL 7038
   - LADDERS/CAGES & HANDRAILS ARE SAFETY YELLOW, RAL 1021
2. THE SKID SHALL BE ADEQUATELY SUPPORTED BY PILE FOUNDATIONS DESIGNED BY OTHERS. THE QUANTITY AND LOCATION OF PILES MUST CONSIDER ALL APPLICABLE LOAD COMBINATIONS SUCH THAT ALLOWABLE BEAM DEFLECTION OR STRESS LIMITS ARE NOT EXCEEDED.
3. ALL UNSPECIFIED WELDS TO BE TYPE FL-2 (6mm CONTINUOUS FILLET WELD UNO).
4. WELD GAP APPLIED TO MATERIAL LIST.
5. USE STANDARD WELDING PROCEDURES: WPS-FC1, WPS-SM1.
6. REMOVE ALL WELD SLAG.
7. NDE REQUIREMENTS: MPI FOR LUGS, 100% RT ON SPLICES.
8. REFERENCE TDE STANDARD DWGS AS REQUIRED: TDE-EN-STD-3002.
9. SHIPPING WEIGHT: 7300kg.
10. SHIPPING LIMITS: N/A.
11. UNLESS OTHERWISE INDICATED, SIZE OF HOLES: Ø22 U/N.
12. MATERIAL NOTES: CSA G40.21M
13. TEMPORARY STEEL SHALL BE PAINTED ORANGE AND WILL BE REMOVED AFTER ERECTION.
14. FOR EQUIPMENT LAYOUT SEE DWG No.: CSA-230-PI-LY-0001.
15. WELDS: E49XX

LEGEND:

- WORK POINT
- PS-XXX PIPE SUPPORT NO.
- GRATING SPAN
- GRATING OPENING
- MC MOMENT CONNECTION
- PILE LOCATIONS

TYPE: FL-1	TYPE: FL-2
WPS-FC1	WPS-FC1
WPS-SM1	WPS-SM1

UPDATED: January 8, 2020 11:27:16 BY: Tdong
PRINTED: January 10, 2020 08:16:39 DWG NAME: P:\CSA\Design Drafting\Structural\ST-DR\CSA-230-ST-DR-0001-01-03 Rev0 Crude Fractionator T-0240 - Orientation Views.dwg

UPDATED: April 16, 2020 12:03:42 PM BY: Tdong

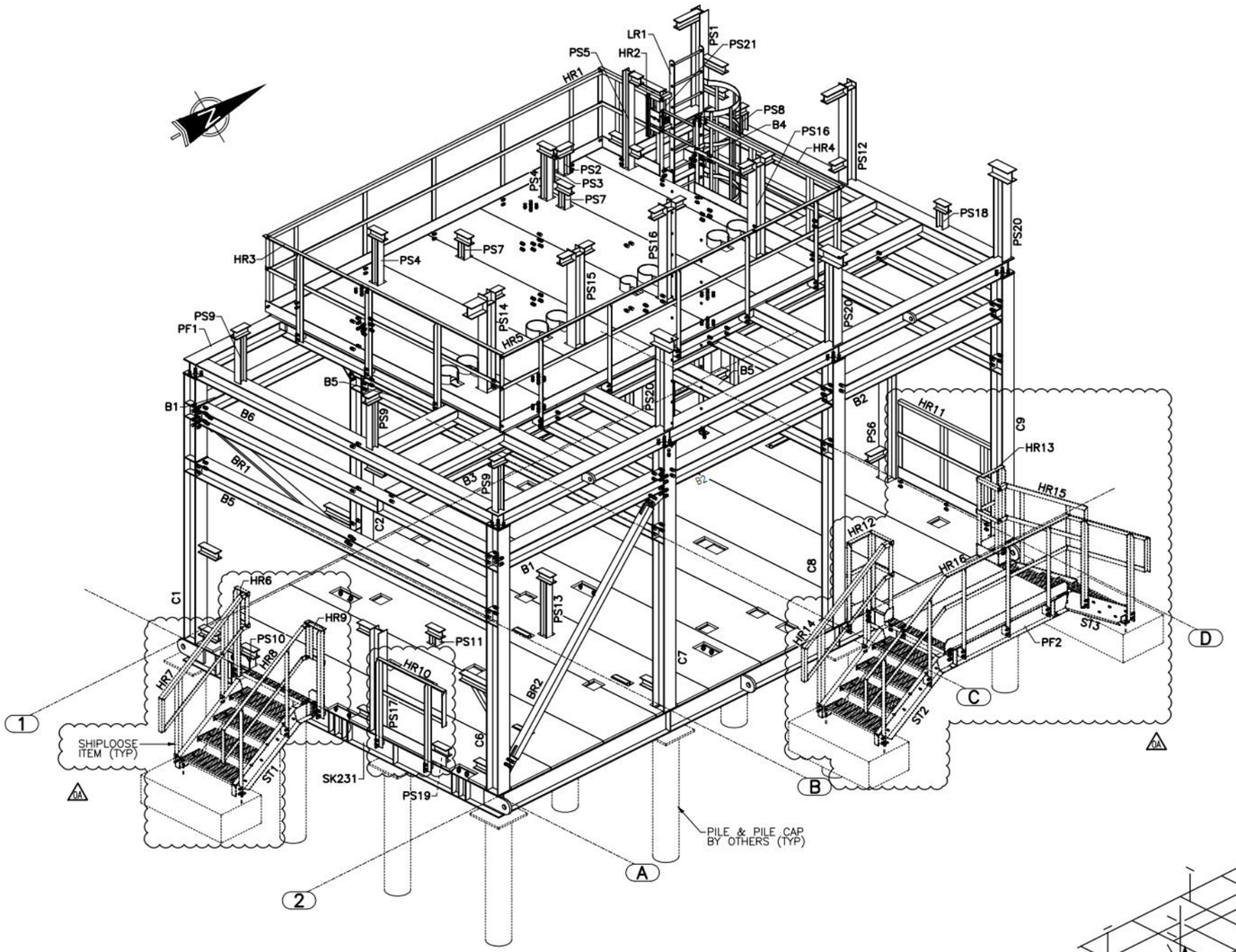

CRUDE FRACTIONATION SKID SK-231 – ISOMETRIC VIEW
(LOOKING FROM SOUTHEAST)

[redacted]

NOTES:

1. SURFACE PREPARATION AND PAINTING:
   DOC NO. TDE-EN-STD-7001 REV.4
   PAINT SYSTEM U-0
   SANDBLAST PER SSPC-SP6;
   PRIMER: N/A
   FINISH: 835 SERIES, 3-5 DFT MILS
   FINISH COLOR:
   - SKID, PLATFORMS, STRUCTURAL SUPPORTS & BOLTINGS ARE STANDARD GREY, RAL 7038
   - LADDERS/CAGES & HANDRAILS ARE SAFETY YELLOW, RAL 1021
2. THE SKID SHALL BE ADEQUATELY SUPPORTED BY PILE FOUNDATIONS DESIGNED BY OTHERS. THE QUANTITY AND LOCATION OF PILES MUST CONSIDER ALL APPLICABLE LOAD COMBINATIONS SUCH THAT ALLOWABLE BEAM DEFLECTION OR STRESS LIMITS ARE NOT EXCEEDED.
3. ALL UNSPECIFIED WELDS TO BE TYPE FL-2 (6mm CONTINUOUS FILLET WELD UNO).
4. WELD GAP APPLIED TO MATERIAL LIST.
5. USE STANDARD WELDING PROCEDURES: WPS-FC1, WPS-SM1.
6. REMOVE ALL WELD SLAG.
7. NDE REQUIREMENTS: MPI FOR LUGS, 100% RT ON SPLICES.
8. REFERENCE TDE STANDARD DWGS AS REQUIRED: TDE-EN-STD-3002.
9. SHIPPING WEIGHT: (36600) kg. ⚠A
10. SHIPPING LIMITS: N/A.
11. UNLESS OTHERWISE INDICATED, SIZE OF HOLES: Ø22 U/N.
12. MATERIAL NOTES: CSA G40.21M
13. TEMPORARY STEEL SHALL BE PAINTED ORANGE AND WILL BE REMOVED AFTER ERECTION.
14. FOR EQUIPMENT LAYOUT SEE DWG No.: CSA-231-PI-LY-0001.
15. WELDS: E49XX

LEGEND:

- WORK POINT
- (PS-XXX) PIPE SUPPORT NO.
- GRATING SPAN
- GRATING OPENING
- MC MOMENT CONNECTION
- PILE LOCATIONS

	TYPE: FL-1	TYPE: FL-2
	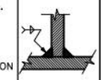	
	WPS-FC1	WPS-FC1
	WPS-SM1	WPS-SM1
		E-671N

EQUIPMENT	WEIGHT [kg] DRY [SHIPPING]
E-0230	1202
E-0225A/B	3130
E-0220	1021
TOTAL	5353

ITEM	SKID WEIGHT [kg] DURING SHIPPING:
structural steel	17272
shipped loose steel	1089
cable tray	100
equipment	5353
piping	12786
TOTAL	(36600)

LIFTING LUG	SHIPPING LOAD [kgf]	LIFTING LUG TYPE
L1	5300	HL1
L2	5300	HL1
L3	8500	HL2
L4	8500	HL2
L5	3800	HL1
L6	4000	HL1

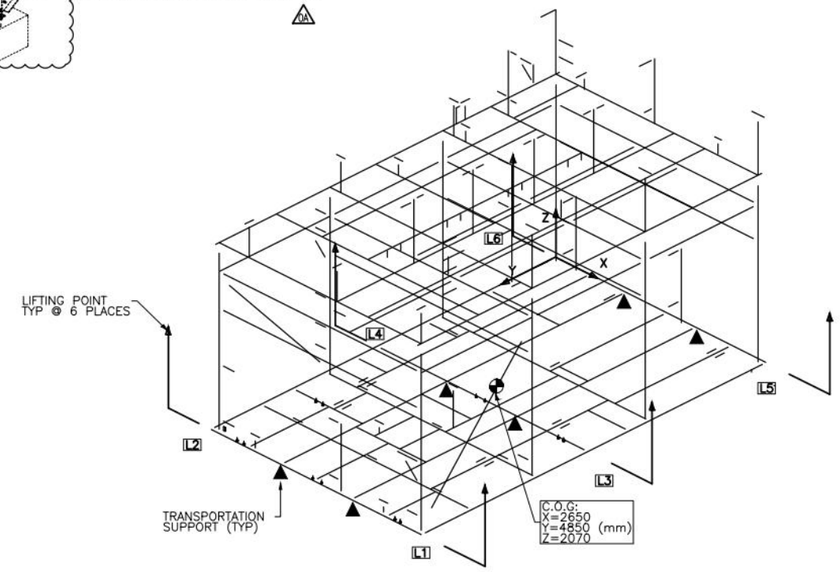

LIFTING & TRANSPORTATION DIAGRAM

[redacted]

PRINTED: April 16, 2020 2:21:48 PM DWG NAME: P:\CSA\Design Drafting\Structural\ST-DR\CSA-231-ST-DR-0001-01-01 RevOA Crude Fractionation Skid SK-231 - Isometric View.dwg

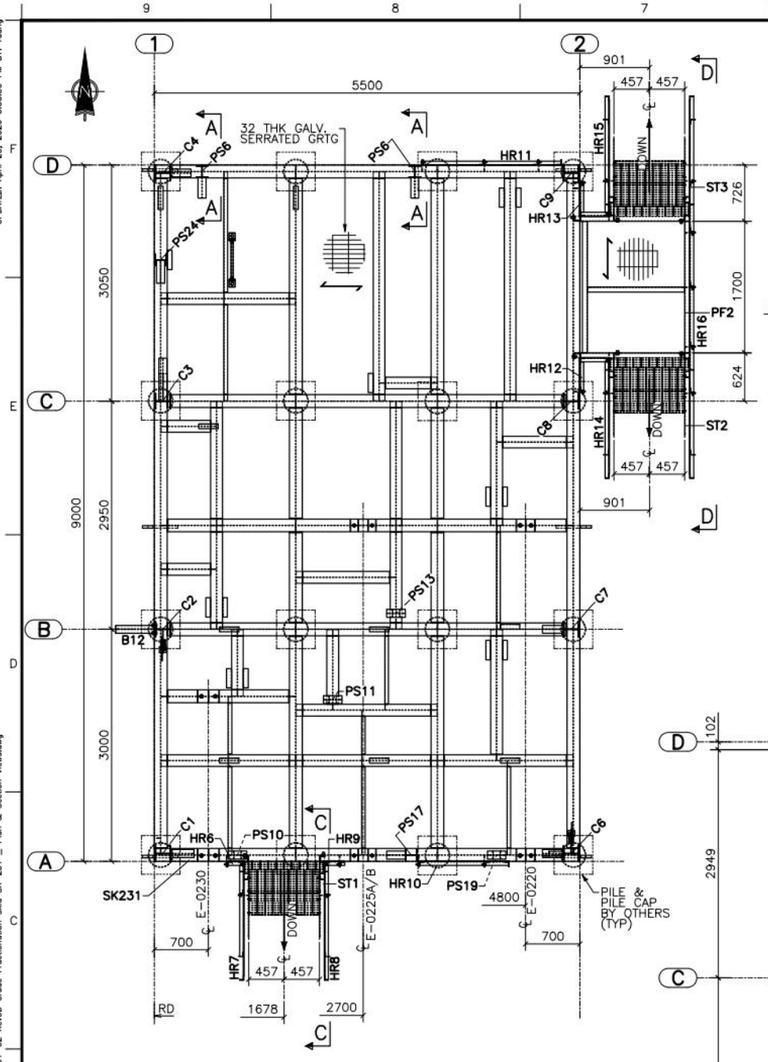

PLAN AT T.O.S EL. +0.313

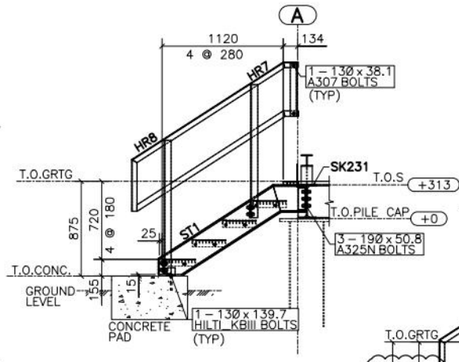

C – C

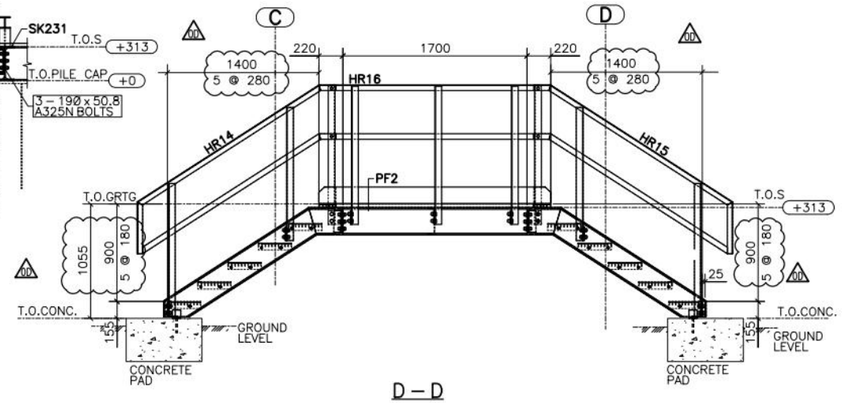

D – D

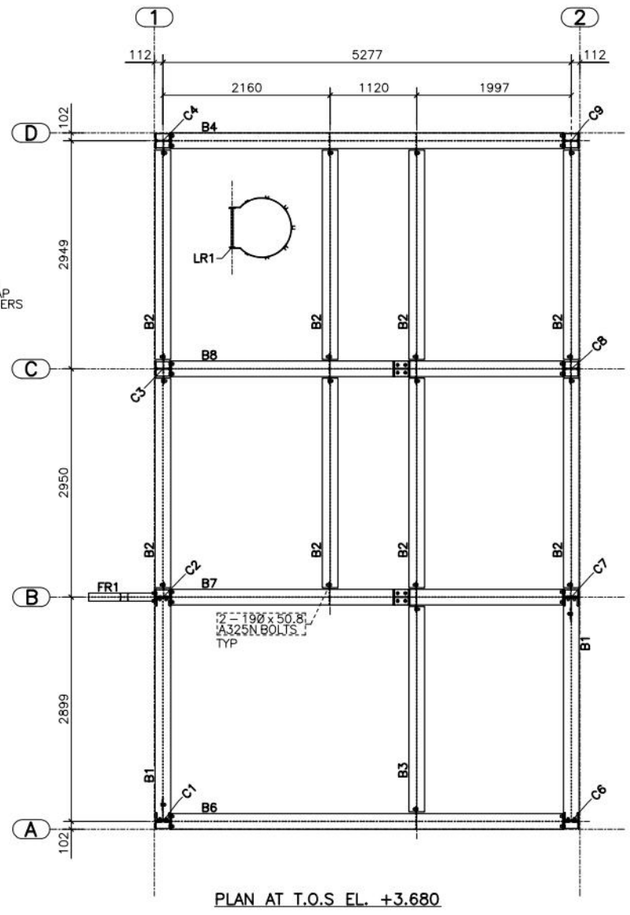

PLAN AT T.O.S EL. +3.680

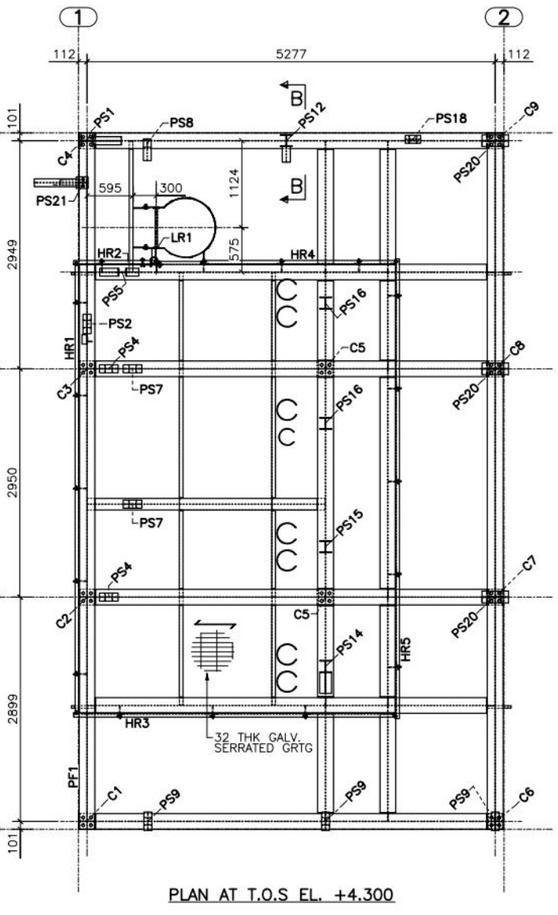

PLAN AT T.O.S EL. +4.300

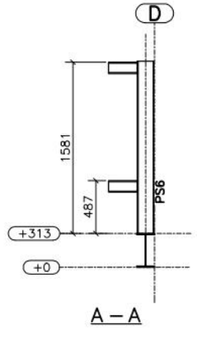

A – A

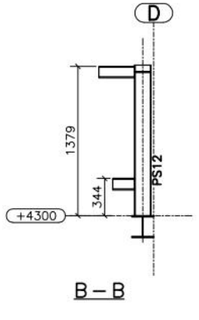

B – B

NOTES:

1. SURFACE PREPARATION AND PAINTING:
   DOC NO. TDE–EN–STD–7001 REV.4
   PAINT SYSTEM U–0
   SANDBLAST PER SSPC–SP6;
   PRIMER: N/A
   FINISH: 835 SERIES, 3–5 DFT MILS
   FINISH COLOR:
   – SKID, PLATFORMS, STRUCTURAL SUPPORTS & BOLTINGS ARE STANDARD GREY, RAL 7038
   – LADDERS/CAGES & HANDRAILS ARE SAFETY YELLOW, RAL 1021
2. THE SKID SHALL BE ADEQUATELY SUPPORTED BY PILE FOUNDATIONS DESIGNED BY OTHERS. THE QUANTITY AND LOCATION OF PILES MUST CONSIDER ALL APPLICABLE LOAD COMBINATIONS SUCH THAT ALLOWABLE BEAM DEFLECTION OR STRESS LIMITS ARE NOT EXCEEDED.
3. ALL UNSPECIFIED WELDS TO BE TYPE FL–2 (6mm CONTINUOUS FILLET WELD UNO).
4. WELD GAP APPLIED TO MATERIAL LIST.
5. USE STANDARD WELDING PROCEDURES: WPS–FC1, WPS–SM1.
6. REMOVE ALL WELD SLAG.
7. NDE REQUIREMENTS: MPI FOR LUGS, 100% RT ON SPLICES.
8. REFERENCE TDE STANDARD DWGS AS REQUIRED: TDE–EN–STD–3002.
9. SHIPPING WEIGHT: 36600 kg.
10. SHIPPING LIMITS: N/A.
11. UNLESS OTHERWISE INDICATED, SIZE OF HOLES: Ø22 U/N
12. MATERIAL NOTES: CSA G40.21M
13. TEMPORARY STEEL SHALL BE PAINTED ORANGE AND WILL BE REMOVED AFTER ERECTION.
14. FOR EQUIPMENT LAYOUT SEE DWG No.: CSA–231–PI–LY–0001.
15. WELDS: E49XX

LEGEND:

- WORK POINT
- PS–XXX PIPE SUPPORT NO.
- GRATING SPAN
- GRATING OPENING
- MC MOMENT CONNECTION
- PILE LOCATIONS

TYPE: FL–1	TYPE: FL–2
WPS–FC1	WPS–FC1
WPS–SM1	WPS–SM1

UPDATED: April 20, 2020 5:38:30 PM BY: Tdong
PRINTED: April 20, 2020 5:48:06 PM DWG NAME: P:\CSA\Design Drafting\Structural\ST–DR\CSA–231–ST–DR–0001–01–02 RevOO Crude Fractionation Skid SK–231 – Plan & Section Views.dwg

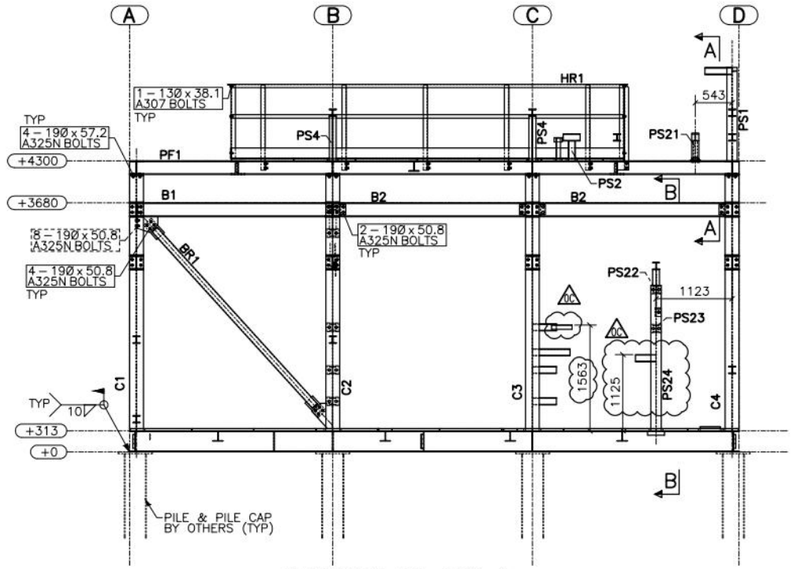

ELEVATION ON GRID 1
(LOOKING WEST)

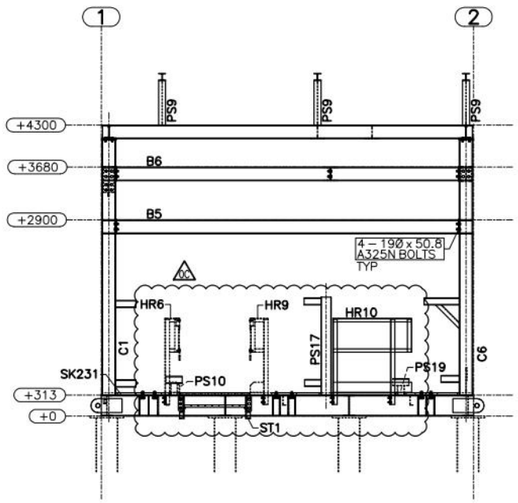

ELEVATION ON GRID A
(LOOKING NORTH)

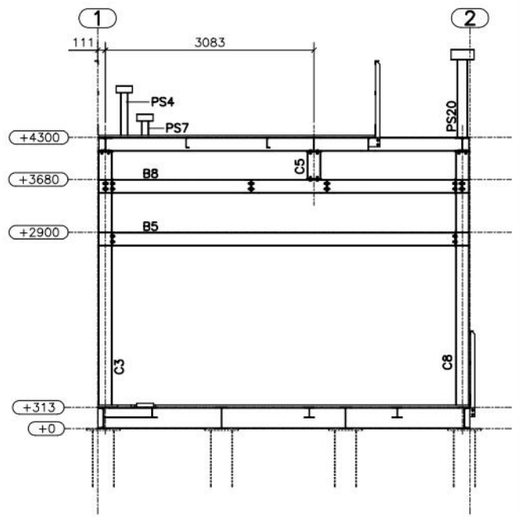

ELEVATION ON GRID C
(LOOKING NORTH)

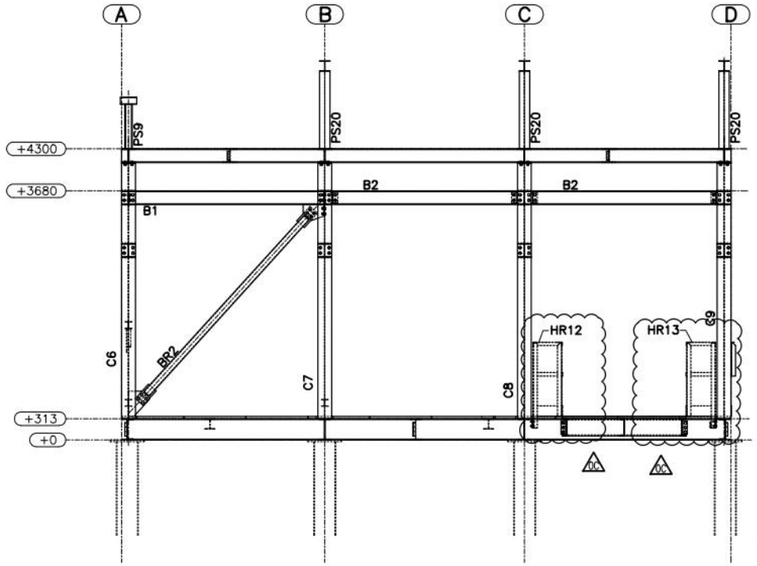

ELEVATION ON GRID 2
(LOOKING WEST)

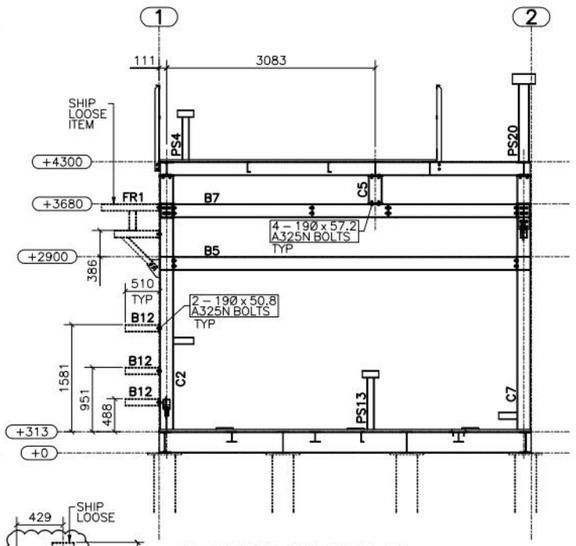

ELEVATION ON GRID B
(LOOKING NORTH)

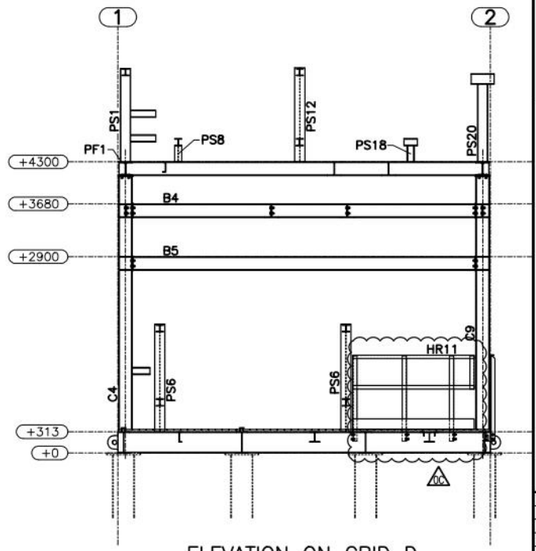

ELEVATION ON GRID D
(LOOKING NORTH)

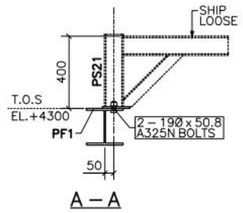

A – A

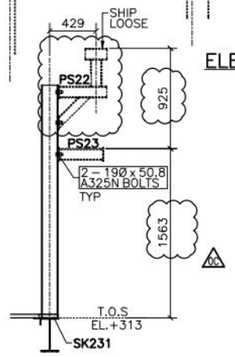

B – B

NOTES:

1. SURFACE PREPARATION AND PAINTING:
   DOC NO. TDE-EN-STD-7001 REV.4
   PAINT SYSTEM U-0
   SANDBLAST PER SSPC-SP6;
   PRIMER: N/A
   FINISH: 835 SERIES, 3-5 DFT MILS
   FINISH COLOR:
   - SKID, PLATFORMS, STRUCTURAL SUPPORTS & BOLTINGS ARE STANDARD GREY, RAL 7038
   - LADDERS/CAGES & HANDRAILS ARE SAFETY YELLOW, RAL 1021
2. THE SKID SHALL BE ADEQUATELY SUPPORTED BY PILE FOUNDATIONS DESIGNED BY OTHERS. THE QUANTITY AND LOCATION OF PILES MUST CONSIDER ALL APPLICABLE LOAD COMBINATIONS SUCH THAT ALLOWABLE BEAM DEFLECTION OR STRESS LIMITS ARE NOT EXCEEDED.
3. ALL UNSPECIFIED WELDS TO BE TYPE FL-2 (6mm CONTINUOUS FILLET WELD UNO).
4. WELD GAP APPLIED TO MATERIAL LIST.
5. USE STANDARD WELDING PROCEDURES: WPS-FC1, WPS-SM1.
6. REMOVE ALL WELD SLAG.
7. NDE REQUIREMENTS: MPI FOR LUGS, 100% RT ON SPLICES.
8. REFERENCE TDE STANDARD DWGS AS REQUIRED: TDE-EN-STD-3002
9. SHIPPING WEIGHT: (36600) kg. ⚠6
10. SHIPPING LIMITS: N/A.
11. UNLESS OTHERWISE INDICATED, SIZE OF HOLES: Ø22 U/N
12. MATERIAL NOTES: CSA G40.21M
13. TEMPORARY STEEL SHALL BE PAINTED ORANGE AND WILL BE REMOVED AFTER ERECTION.
14. FOR EQUIPMENT LAYOUT SEE DWG No.: CSA-231-PI-LY-0001.
15. WELDS: E49XX

LEGEND:

- WORK POINT
- (PS-XXX) PIPE SUPPORT NO.
- GRATING SPAN
- GRATING OPENING
- MC MOMENT CONNECTION
- PILE LOCATIONS

TYPE: FL-1	TYPE: FL-2
WPS-FC1	WPS-FC1
WPS-SM1	WPS-SM1

UPDATED: April 17, 2020 9:06:51 AM BY: Tdang
PRINTED: April 17, 2020 4:53:30 PM DWG NAME: P:\CSA\Design Drafting\Structural\ST-DR\CSA-231-ST-DR-0001-01-03 RevOC Crude Fractionation Skid SK-231 - Elevation Views.dwg

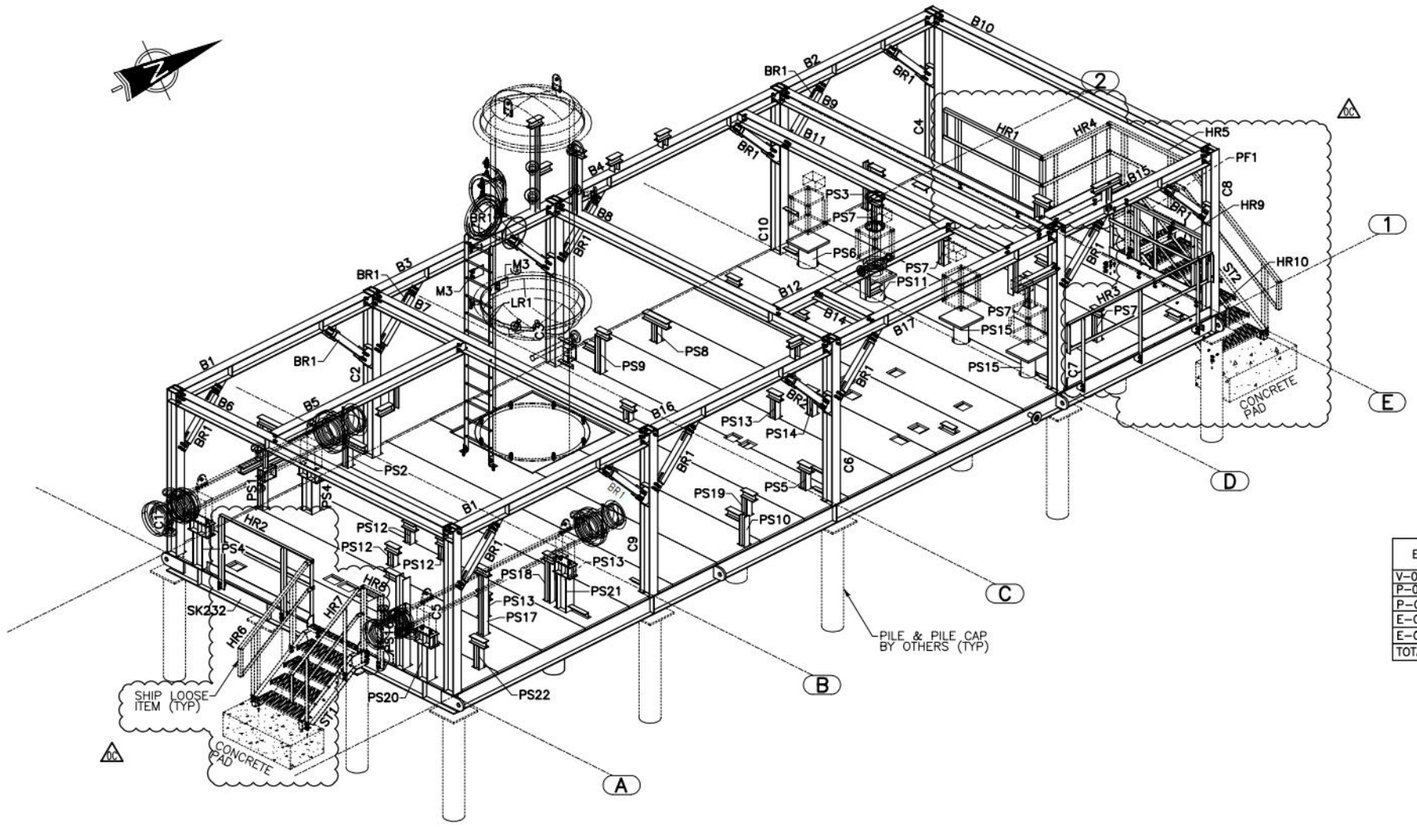

FRACTIONATION SKID SK-232 – ISOMETRIC VIEW
(LOOKING FROM SOUTHEAST)

EQUIPMENT	WEIGHT [kg] DRY [SHIPPING]
V-0235	3000
P-0235A/B	363 (x2)
P-0240A/B	386 (x2)
E-0235	1340
E-0240	1820
TOTAL	7658

NOTES:

1. SURFACE PREPARATION AND PAINTING:
   DOC NO. TDE-EN-STD-7001 REV.4
   PAINT SYSTEM U-0
   SANDBLAST PER SSPC-SP6;
   PRIMER: N/A
   FINISH: 835 SERIES, 3-5 DFT MILS
   FINISH COLOR:
   - SKID, PLATFORMS, STRUCTURAL SUPPORTS & BOLTINGS ARE STANDARD GREY, RAL 7038
   - LADDERS/CAGES & HANDRAILS ARE SAFETY YELLOW, RAL 1021
2. THE SKID SHALL BE ADEQUATELY SUPPORTED BY PILE FOUNDATIONS DESIGNED BY OTHERS. THE QUANTITY AND LOCATION OF PILES MUST CONSIDER ALL APPLICABLE LOAD COMBINATIONS SUCH THAT ALLOWABLE BEAM DEFLECTION OR STRESS LIMITS ARE NOT EXCEEDED.
3. ALL UNSPECIFIED WELDS TO BE TYPE FL-2 (6mm CONTINUOUS FILLET WELD UNO).
4. WELD GAP APPLIED TO MATERIAL LIST.
5. USE STANDARD WELDING PROCEDURES: WPS-FC1, WPS-SM1.
6. REMOVE ALL WELD SLAG.
7. NDE REQUIREMENTS: MPI FOR LUGS, 100% RT ON SPLICES.
8. REFERENCE TDE STANDARD DWGS AS REQUIRED: TDE-EN-STD-3002.
9. SHIPPING WEIGHT: (39500) kg. ⚠6
10. SHIPPING LIMITS: N/A.
11. UNLESS OTHERWISE INDICATED, SIZE OF HOLES: Ø22 U/N
12. MATERIAL NOTES: CSA G40.21M
13. TEMPORARY STEEL SHALL BE PAINTED ORANGE AND WILL BE REMOVED AFTER ERECTION.
14. FOR EQUIPMENT LAYOUT SEE DWG No.: CSA-232-PI-LY-0001.
15. WELDS: E49XX

LEGEND:

- WORK POINT
- (PS-XXX) PIPE SUPPORT NO.
- GRATING SPAN
- GRATING OPENING
- MC MOMENT CONNECTION
- PILE LOCATIONS

TYPE: FL-1	TYPE: FL-2
WPS-FC1	WPS-FC1
WPS-SM1	WPS-SM1
	E-671N

ITEM	SKID WEIGHT [kg] DURING SHIPPING:
structural steel	18079
shipped loose steel	941
cable tray	275
equipment ⚠6	7658
piping	12547
TOTAL	(39500)

LIFTING LUG	SHIPPING LOAD [kgf]	LIFTING LUG TYPE
L1	3200	HL1
L2	3600	HL1
L3	7100	HL2
L4	8500	HL2
L5	7000	HL2
L6	6600	HL2
L7	800	HL1
L8	800	HL1

[redacted]

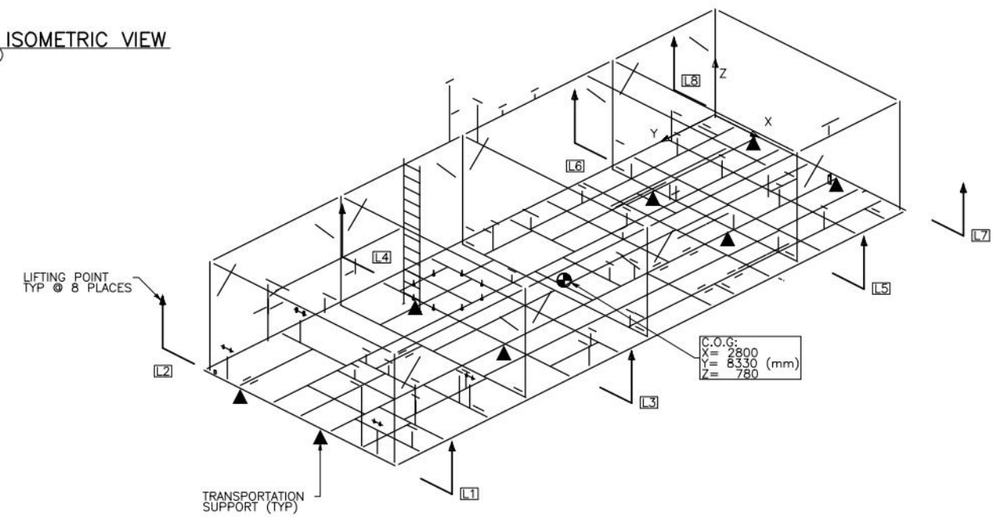

LIFTING & TRANSPORTATION DIAGRAM

[redacted]

UPDATED: April 20, 2020 11:13:49 AM BY: Tdang
PRINTED: April 21, 2020 9:10:28 AM DWG NAME: P:\CSA\Design Drafting\Structural\ST-DR\CSA-232-ST-DR-0001-01-01 ReviOC Fractionation Skid SK-232 - Isometric View.dwg

UPDATED: April 20, 2020 11:24:21 AM BY: Tdong
PRINTED: April 21, 2020 9:11:00 AM DWG NAME: P:\CSA\Design Drafting\Structural\ST-DR\CSA-232-ST-DR-0001-01-02 RevOc Fractionation Skid SK-232 - Plan & Section Views.dwg

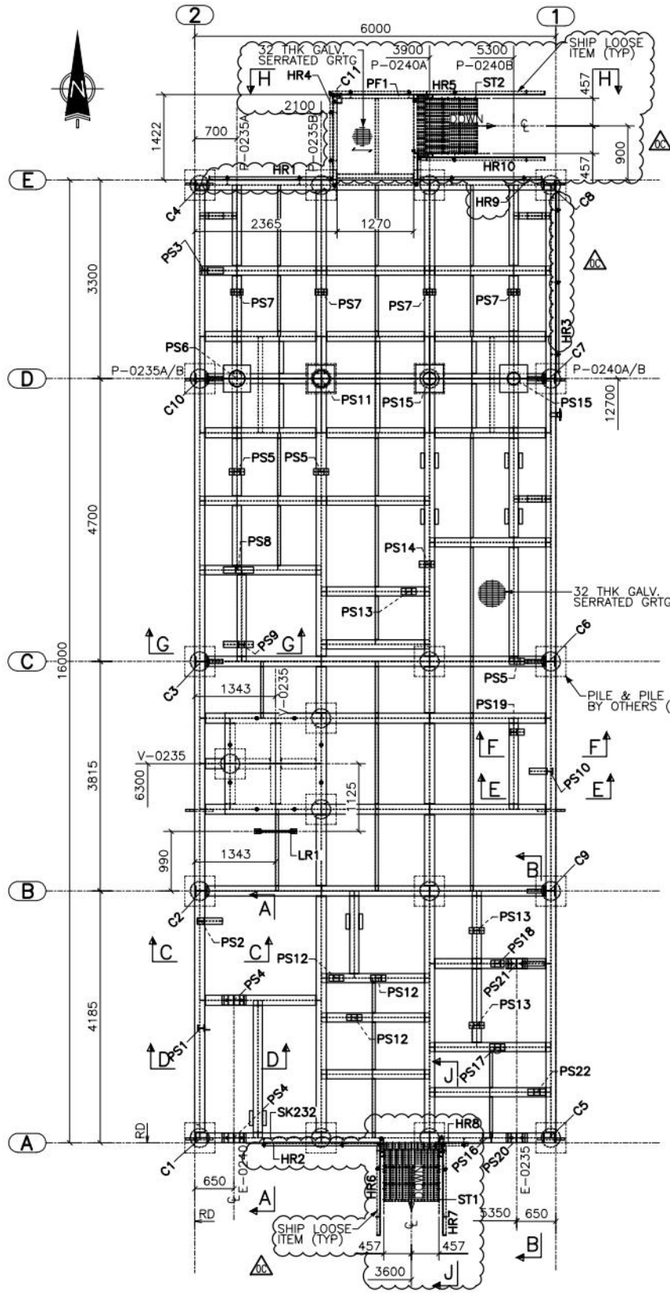

PLAN AT T.O.S EL. +0.313

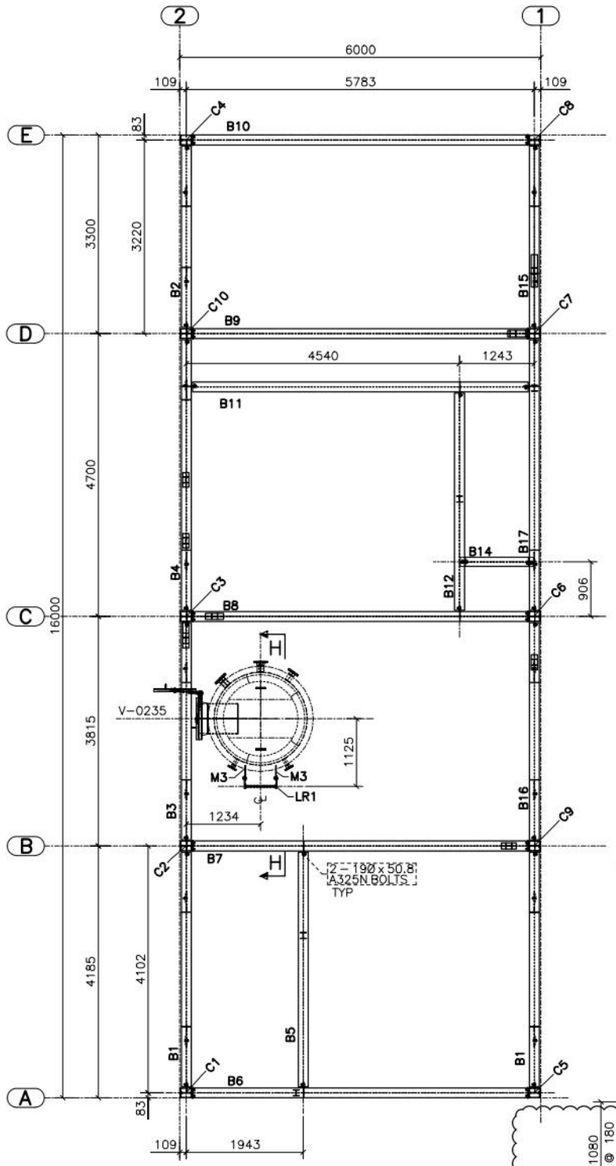

PLAN AT T.O.S EL. +3.100

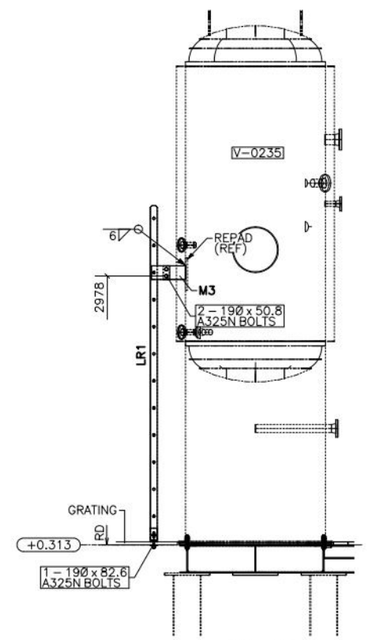

H – H

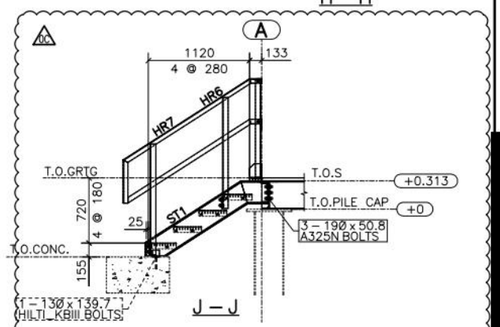

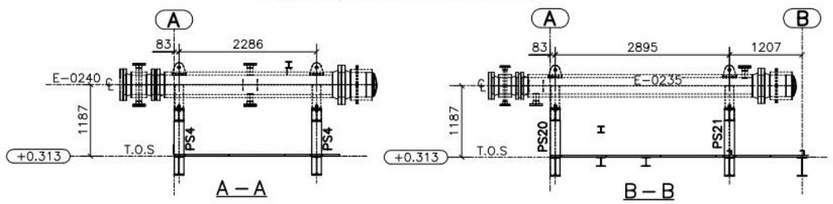

A – A

B – B

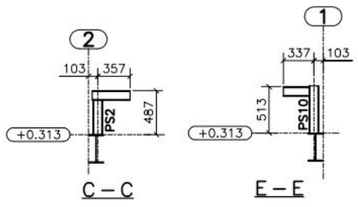

C – C

E – E

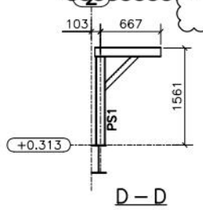

D – D

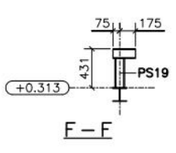

F – F

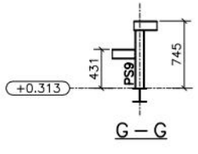

G – G

NOTES:

1. SURFACE PREPARATION AND PAINTING:
   DOC NO. TDE-EN-STD-7001 REV.4
   PAINT SYSTEM U-O
   SANDBLAST PER SSPC-SP6;
   PRIMER: N/A
   FINISH: 835 SERIES, 3-5 DFT MILS
   FINISH COLOR:
   - SKID, PLATFORMS, STRUCTURAL SUPPORTS & BOLTINGS ARE STANDARD GREY, RAL 7038
   - LADDERS/CAGES & HANDRAILS ARE SAFETY YELLOW, RAL 1021
2. THE SKID SHALL BE ADEQUATELY SUPPORTED BY PILE FOUNDATIONS DESIGNED BY OTHERS. THE QUANTITY AND LOCATION OF PILES MUST CONSIDER ALL APPLICABLE LOAD COMBINATIONS SUCH THAT ALLOWABLE BEAM DEFLECTION OR STRESS LIMITS ARE NOT EXCEEDED.
3. ALL UNSPECIFIED WELDS TO BE TYPE FL-2 (6mm CONTINUOUS FILLET WELD UNO).
4. WELD GAP APPLIED TO MATERIAL LIST.
5. USE STANDARD WELDING PROCEDURES: WPS-FC1, WPS-SM1.
6. REMOVE ALL WELD SLAG.
7. NDE REQUIREMENTS: MPI FOR LUGS, 100% RT ON SPLICES.
8. REFERENCE TDE STANDARD DWGS AS REQUIRED: TDE-EN-STD-3002.
9. SHIPPING WEIGHT: (39500) kg
10. SHIPPING LIMITS: N/A.
11. UNLESS OTHERWISE INDICATED, SIZE OF HOLES: Ø22 U/N.
12. MATERIAL NOTES: CSA G40.21M
13. TEMPORARY STEEL SHALL BE PAINTED ORANGE AND WILL BE REMOVED AFTER ERECTION.
14. FOR EQUIPMENT LAYOUT SEE DWG No.: CSA-232-PI-LY-0001.
15. WELDS: E49XX

LEGEND:

- WORK POINT
- (PS-XXX) PIPE SUPPORT NO.
- GRATING SPAN
- GRATING OPENING
- MC MOMENT CONNECTION
- PILE LOCATIONS

TYPE: FL-1	TYPE: FL-2
WPS-FC1	WPS-FC1
WPS-SM1	WPS-SM1
	E-671N

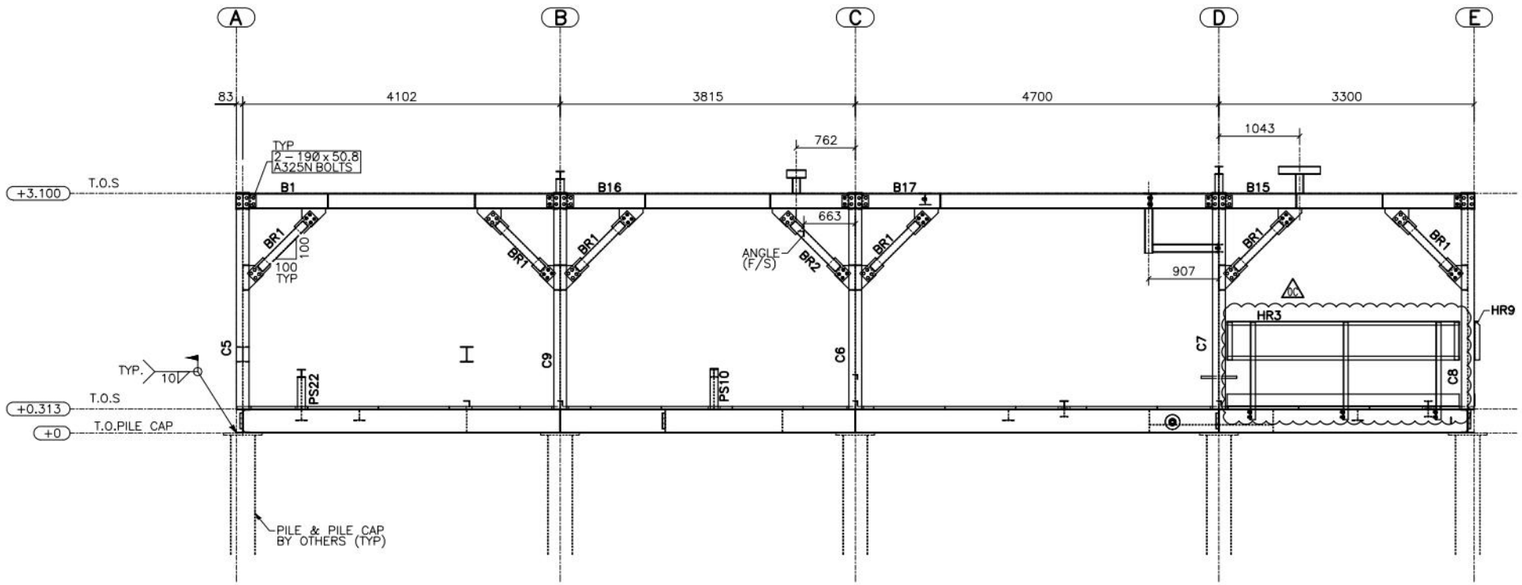

ELEVATION ON GRID 1
(LOOKING WEST)

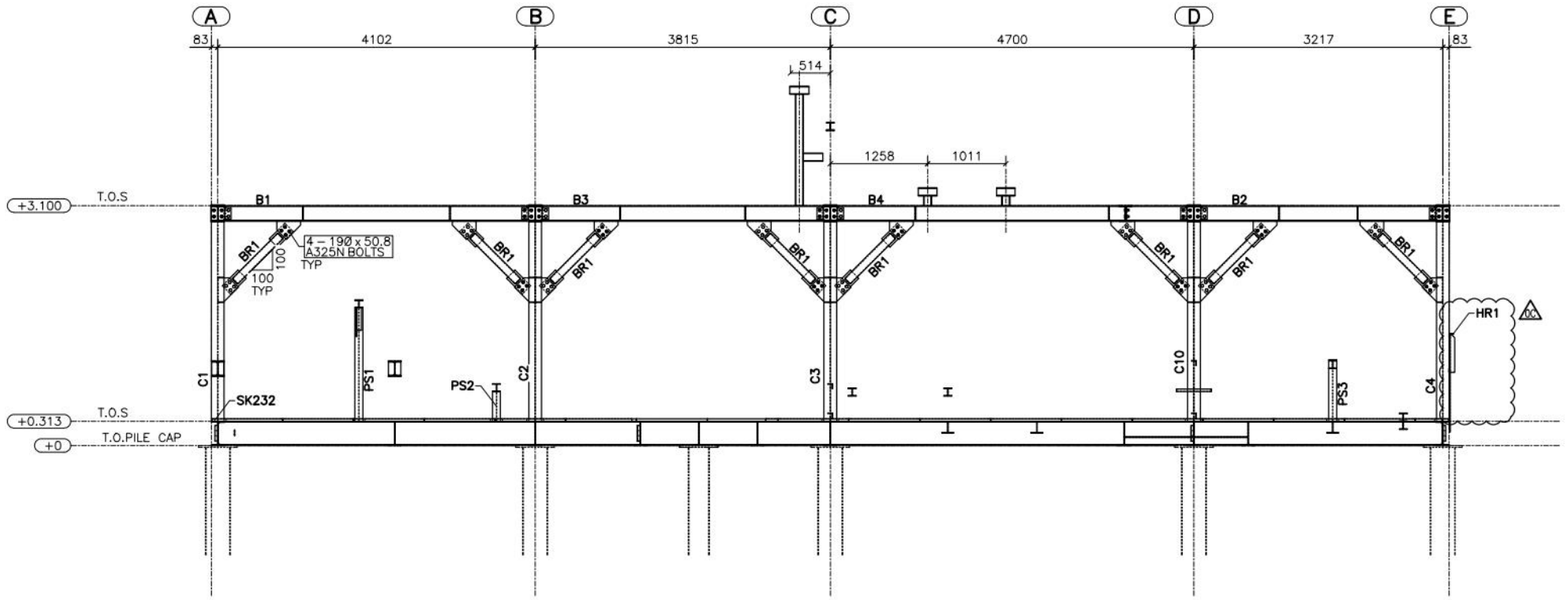

ELEVATION ON GRID 2
(LOOKING WEST)

NOTES:

1. SURFACE PREPARATION AND PAINTING:
   DOC NO. TDE–EN–STD–7001 REV.4
   PAINT SYSTEM U–0
   SANDBLAST PER SSPC–SP6;
   PRIMER: N/A
   FINISH: 835 SERIES, 3–5 DFT MILS
   FINISH COLOR:
   – SKID, PLATFORMS, STRUCTURAL SUPPORTS & BOLTINGS ARE STANDARD GREY, RAL 7038
   – LADDERS/CAGES & HANDRAILS ARE SAFETY YELLOW, RAL 1021
2. THE SKID SHALL BE ADEQUATELY SUPPORTED BY PILE FOUNDATIONS DESIGNED BY OTHERS. THE QUANTITY AND LOCATION OF PILES MUST CONSIDER ALL APPLICABLE LOAD COMBINATIONS SUCH THAT ALLOWABLE BEAM DEFLECTION OR STRESS LIMITS ARE NOT EXCEEDED.
3. ALL UNSPECIFIED WELDS TO BE TYPE FL–2 (6mm CONTINUOUS FILLET WELD UNO).
4. WELD GAP APPLIED TO MATERIAL LIST.
5. USE STANDARD WELDING PROCEDURES: WPS–FC1, WPS–SM1.
6. REMOVE ALL WELD SLAG.
7. NDE REQUIREMENTS: MPI FOR LUGS, 100% RT ON SPLICES.
8. REFERENCE TDE STANDARD DWGS AS REQUIRED: TDE–EN–STD–3002.
9. SHIPPING WEIGHT: (39500) kg. ⚠
10. SHIPPING LIMITS: N/A.
11. UNLESS OTHERWISE INDICATED, SIZE OF HOLES: Ø22 U/N
12. MATERIAL NOTES: CSA G40.21M
13. TEMPORARY STEEL SHALL BE PAINTED ORANGE AND WILL BE REMOVED AFTER ERECTION.
14. FOR EQUIPMENT LAYOUT SEE DWG No.: CSA–232–PI–LY–0001.
15. WELDS: E49XX

LEGEND:

- WORK POINT
- (PS–XXX) PIPE SUPPORT NO.
- GRATING SPAN
- GRATING OPENING
- MC MOMENT CONNECTION
- PILE LOCATIONS

TYPE: FL–1	TYPE: FL–2
WPS–FC1	WPS–FC1
WPS–SM1	WPS–SM1
	E–671N

UPDATED: April 20, 2020 3:19:32 PM BY: Tdang
PRINTED: April 21, 2020 8:11:24 AM DWG NAME: P:\CSA\Design Drafting\Structural\ST-DR\CSA-232-ST-DR-0001-01-03 RevOC Fractionation Skid SK-232 _ Elevation Views.dwg

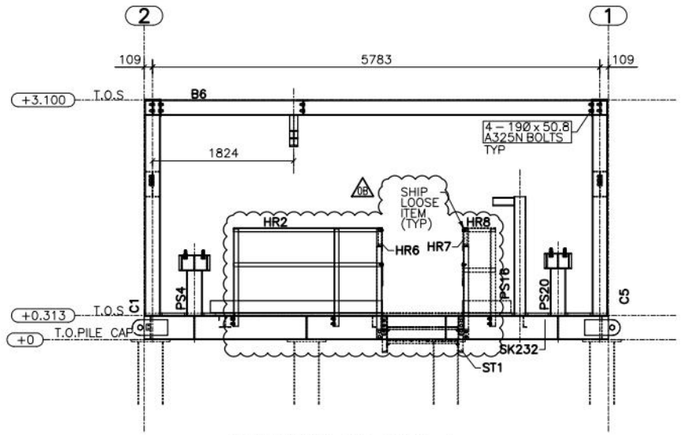

ELEVATION ON GRID A
(LOOKING NORTH)

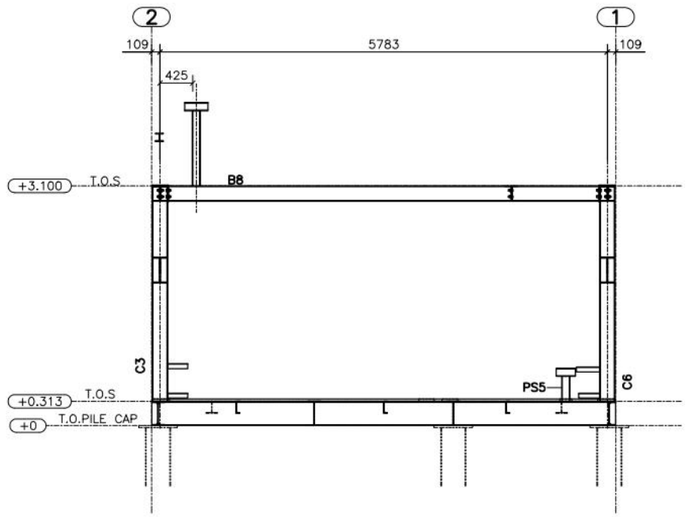

ELEVATION ON GRID C
(LOOKING NORTH)

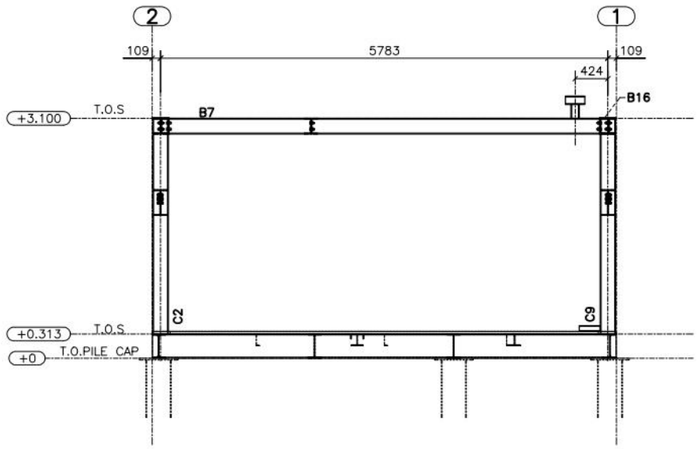

ELEVATION ON GRID B
(LOOKING NORTH)

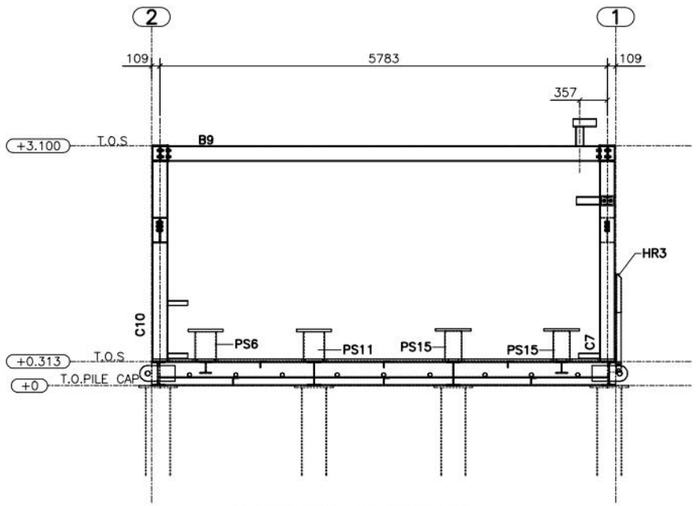

ELEVATION ON GRID D
(LOOKING NORTH)

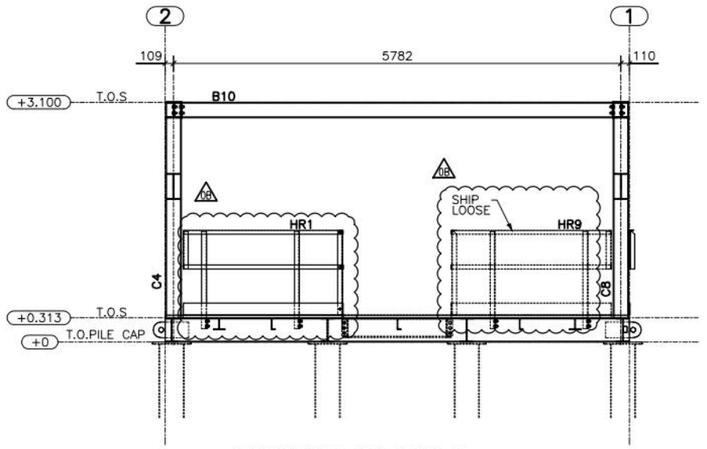

ELEVATION ON GRID E
(LOOKING NORTH)

NOTES:

1. SURFACE PREPARATION AND PAINTING:
   DOC NO. TDE–EN–STD–7001 REV.4
   PAINT SYSTEM U–0
   SANDBLAST PER SSPC–SP6;
   PRIMER: N/A
   FINISH: 835 SERIES, 3–5 DFT MILS
   FINISH COLOR:
   – SKID, PLATFORMS, STRUCTURAL SUPPORTS & BOLTINGS ARE STANDARD GREY, RAL 7038
   – LADDERS/CAGES & HANDRAILS ARE SAFETY YELLOW, RAL 1021
2. THE SKID SHALL BE ADEQUATELY SUPPORTED BY PILE FOUNDATIONS DESIGNED BY OTHERS. THE QUANTITY AND LOCATION OF PILES MUST CONSIDER ALL APPLICABLE LOAD COMBINATIONS SUCH THAT ALLOWABLE BEAM DEFLECTION OR STRESS LIMITS ARE NOT EXCEEDED.
3. ALL UNSPECIFIED WELDS TO BE TYPE FL–2 (6mm CONTINUOUS FILLET WELD UNO).
4. WELD GAP APPLIED TO MATERIAL LIST.
5. USE STANDARD WELDING PROCEDURES: WPS–FC1, WPS–SM1.
6. REMOVE ALL WELD SLAG.
7. NDE REQUIREMENTS: MPI FOR LUGS, 100% RT ON SPLICES.
8. REFERENCE TDE STANDARD DWGS AS REQUIRED: TDE–EN–STD–3002.
9. SHIPPING WEIGHT: 39500 kg. (OR)
10. SHIPPING LIMITS: N/A.
11. UNLESS OTHERWISE INDICATED, SIZE OF HOLES: Ø22 U/N.
12. MATERIAL NOTES: CSA G40.21M
13. TEMPORARY STEEL SHALL BE PAINTED ORANGE AND WILL BE REMOVED AFTER ERECTION.
14. FOR EQUIPMENT LAYOUT SEE DWG No.: CSA–232–PI–LY–0001.
15. WELDS: E49XX

LEGEND:

- WORK POINT
- (PS–XXX) PIPE SUPPORT NO.
- GRATING SPAN
- GRATING OPENING
- MC MOMENT CONNECTION
- PILE LOCATIONS

TYPE: FL–1	TYPE: FL–2
WPS–FC1	WPS–FC1
WPS–SM1	WPS–SM1
	E–671N

UPDATED: April 20, 2020 11:47:28 AM BY: Tdang
PRINTED: April 21, 2020 9:11:56 AM DWG NAME: P:\CSA\Design Drafting\Structural\ST–DR\CSA–232–ST–DR–0001–01–04 Rev08 Fractionation Skid SK–232 _ Elevation Views.dwg

UPDATED: April 22, 2020 1:39:21 PM BY: Tdang

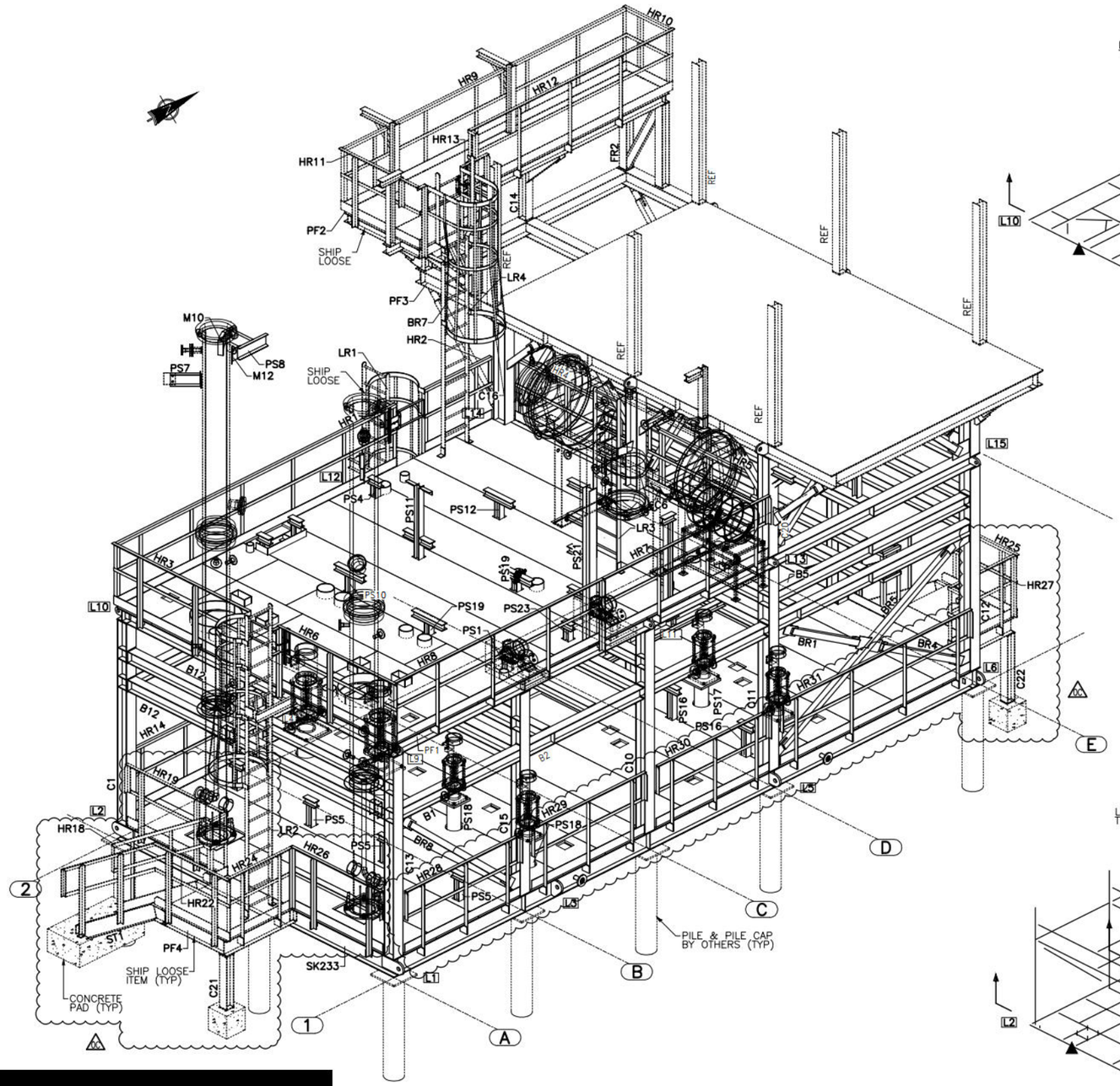

FRACTIONATION SKID SK-233 - ISOMETRIC VIEW
(LOOKING FROM SOUTHEAST)

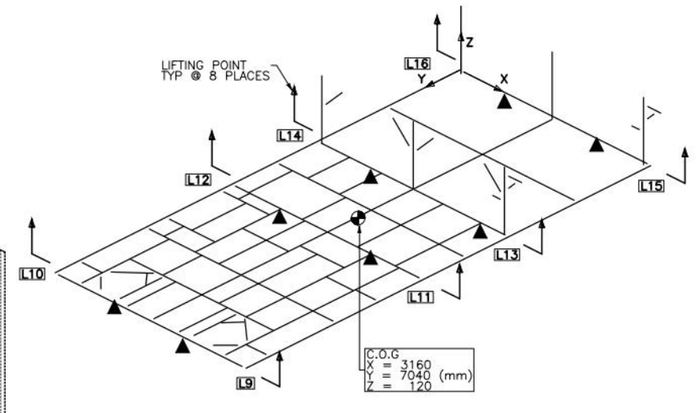

LIFTING & TRANSPORTATION DIAGRAM
FOR PLATFORM PF1
WEIGHT = 17000 kg

EQUIPMENT	WEIGHT [kg] DRY [SHIPPING]
AC-0255 (shiploose)	17300
T-0245	500
T-0250	500
V-0255	2500
P-0245A/B	250(x2)
P-0250A/B	727(x2)
P-0255A/B	386(x2)
P-0260A/B	250(x2)
TOTAL	6726

NOTES:

1. SURFACE PREPARATION AND PAINTING:
   DOC NO. TDE-EN-STD-7001 REV.4
   PAINT SYSTEM U-0
   SANDBLAST PER SSPC-SP6;
   PRIMER: N/A
   FINISH: 835 SERIES, 3-5 DFT MILS
   FINISH COLOR:
   - SKID, PLATFORMS, STRUCTURAL SUPPORTS & BOLTINGS ARE STANDARD GREY, RAL 7038
   - LADDERS/CAGES & HANDRAILS ARE SAFETY YELLOW, RAL 1021
2. THE SKID SHALL BE ADEQUATELY SUPPORTED BY PILE FOUNDATIONS DESIGNED BY OTHERS. THE QUANTITY AND LOCATION OF PILES MUST CONSIDER ALL APPLICABLE LOAD COMBINATIONS SUCH THAT ALLOWABLE BEAM DEFLECTION OR STRESS LIMITS ARE NOT EXCEEDED.
3. ALL UNSPECIFIED WELDS TO BE TYPE FL-2 (6mm CONTINUOUS FILLET WELD UNO).
4. WELD GAP APPLIED TO MATERIAL LIST.
5. USE STANDARD WELDING PROCEDURES: WPS-FC1, WPS-SM1.
6. REMOVE ALL WELD SLAG.
7. NDE REQUIREMENTS: MPI FOR LUGS, 100% RT ON SPLICES.
8. REFERENCE TDE STANDARD DWGS AS REQUIRED: TDE-EN-STD-3002.
9. SHIPPING WEIGHT: SK=33800kg, PF=17000kg. (1)
10. SHIPPING LIMITS: N/A.
11. UNLESS OTHERWISE INDICATED, SIZE OF HOLES: Ø22 U/N.
12. MATERIAL NOTES: CSA G40.21M
13. TEMPORARY STEEL SHALL BE PAINTED ORANGE AND WILL BE REMOVED AFTER ERECTION.
14. FOR EQUIPMENT LAYOUT SEE DWG No.: CSA-233-PI-LY-0001.
15. WELDS: E49XX

LEGEND:

- WORK POINT
- PS-XXX — PIPE SUPPORT NO.
- GRATING SPAN
- GRATING OPENING
- MC — MOMENT CONNECTION
- PILE LOCATIONS

TYPE: FL-1	TYPE: FL-2
WPS-FC1	WPS-FC1
WPS-SM1	WPS-SM1
	E-671N

ITEM	SKID WEIGHT [kg] DURING SHIPPING:
structural steel	30310
ship loose steel	(1) 8024
equipment	6726
piping	15440
TOTAL	(1) 60500

LIFTING LUG	SHIPPING LOAD [kgf]	LIFTING LUG TYPE
L1	2400	HL1
L2	2400	HL1
L3	5600	HL2
L4	6400	HL2
L5	6100	HL3
L6	5800	HL3
L7	2600	HL1
L8	(1) 2500	HL1
L9	1800	HL3
L10	1700	HL3
L11	4300	HL3
L12	3500	HL3
L13	2500	HL3
L14	1600	HL3
L15	900	HL3
L16	800	HL3

SK-233

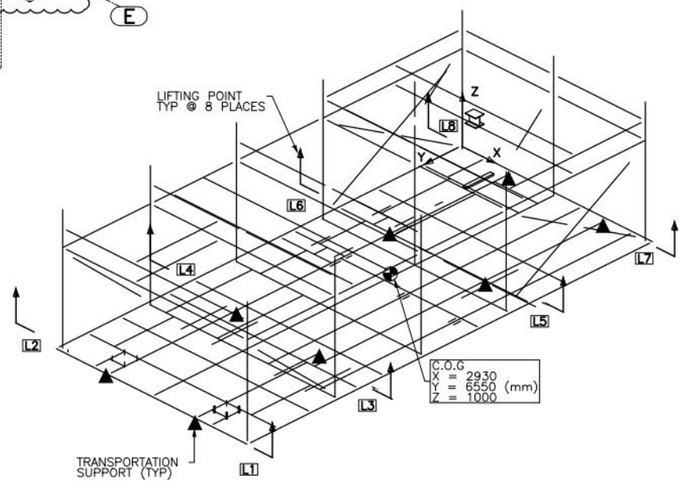

LIFTING & TRANSPORTATION DIAGRAM
FOR SKID SK233
WEIGHT = (1) 33800 kg

PRINTED: April 23, 2020 2:11:09 PM DWG NAME: P:\CSA\Design Drafting\Structural\ST-DR\CSA-233-ST-DR-0001-01-01 RevOc Fractionation Skid SK-233 _ Isometric View.dwg

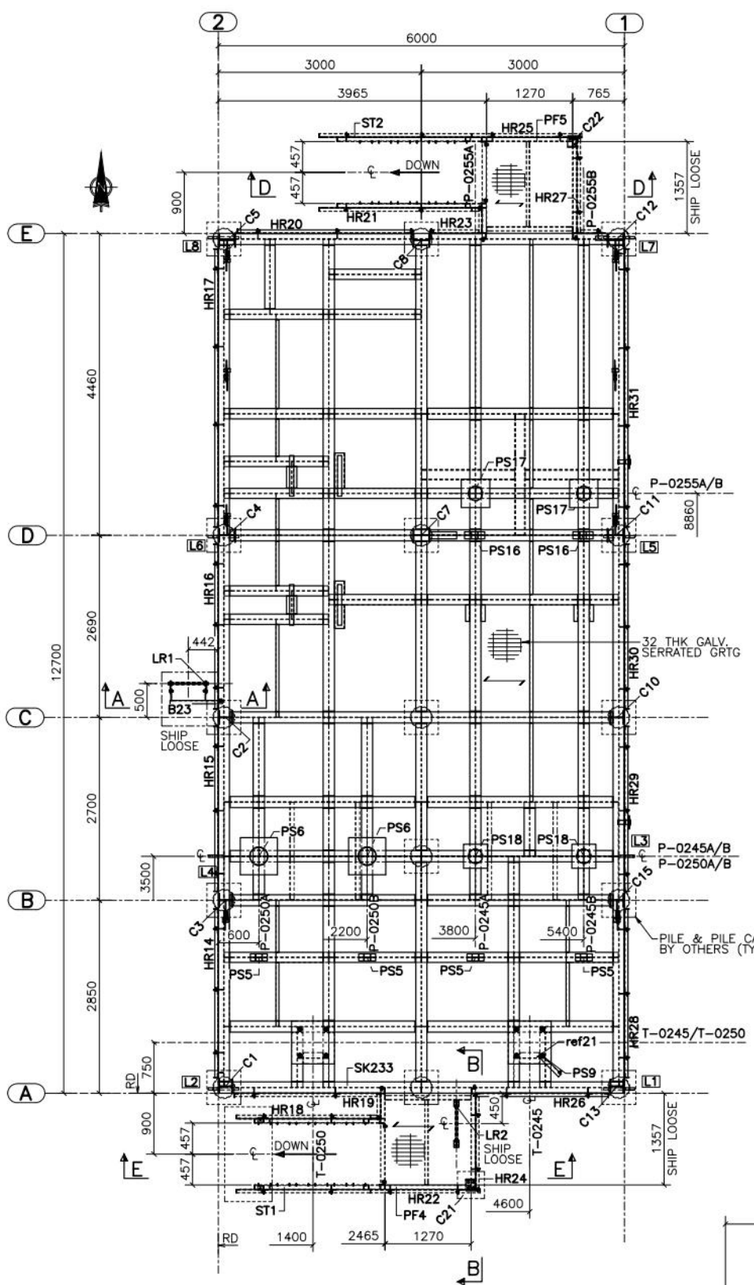

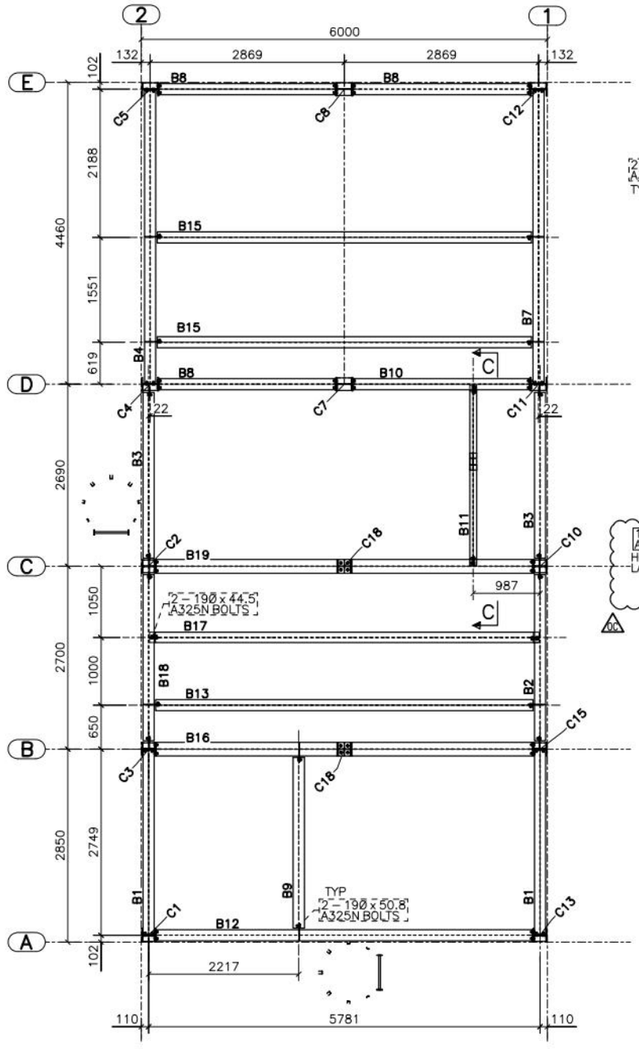

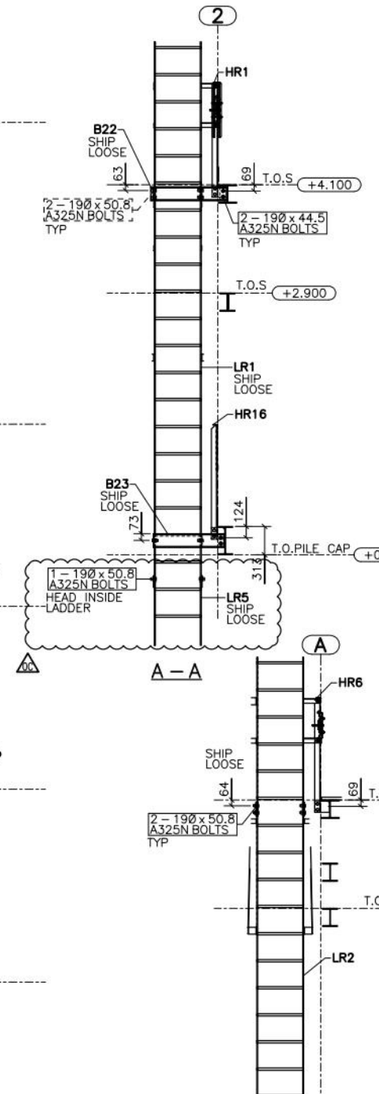

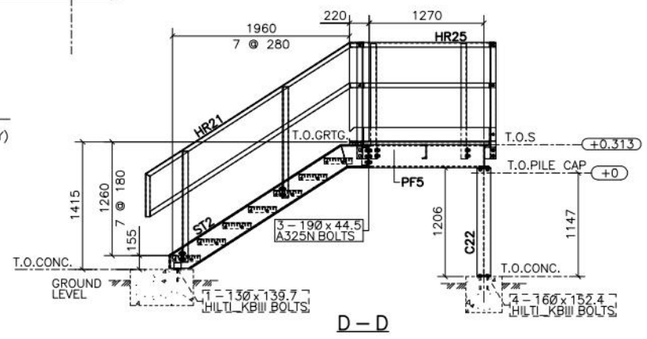

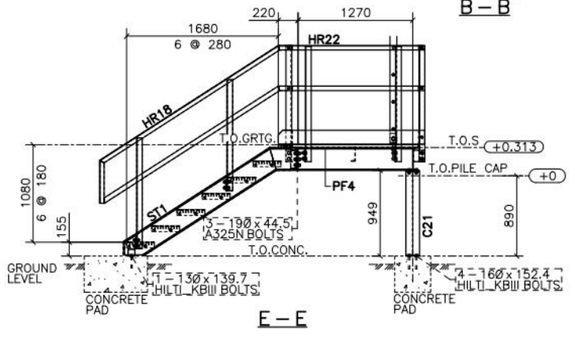

NOTES:

1. SURFACE PREPARATION AND PAINTING:
   DOC NO. TDE–EN–STD–7001 REV.4
   PAINT SYSTEM U–0
   SANDBLAST PER SSPC–SP6;
   PRIMER: N/A
   FINISH: 835 SERIES, 3–5 DFT MILS
   FINISH COLOR:
   – SKID, PLATFORMS, STRUCTURAL SUPPORTS & BOLTINGS ARE STANDARD GREY, RAL 7038
   – LADDERS/CAGES & HANDRAILS ARE SAFETY YELLOW, RAL 1021
2. THE SKID SHALL BE ADEQUATELY SUPPORTED BY PILE FOUNDATIONS DESIGNED BY OTHERS. THE QUANTITY AND LOCATION OF PILES MUST CONSIDER ALL APPLICABLE LOAD COMBINATIONS SUCH THAT ALLOWABLE BEAM DEFLECTION OR STRESS LIMITS ARE NOT EXCEEDED.
3. ALL UNSPECIFIED WELDS TO BE TYPE FL–2 (6mm CONTINUOUS FILLET WELD UNO).
4. WELD GAP APPLIED TO MATERIAL LIST.
5. USE STANDARD WELDING PROCEDURES: WPS–FC1, WPS–SM1.
6. REMOVE ALL WELD SLAG.
7. NDE REQUIREMENTS: MPI FOR LUGS, 100% RT ON SPLICES.
8. REFERENCE TDE STANDARD DWGS AS REQUIRED: TDE–EN–STD–3002.
9. SHIPPING WEIGHT: SK=33800kg, PF=17000kg.
10. SHIPPING LIMITS: N/A.
11. UNLESS OTHERWISE INDICATED, SIZE OF HOLES: Ø22 U/N.
12. MATERIAL NOTES: CSA G40.21M
13. TEMPORARY STEEL SHALL BE PAINTED ORANGE AND WILL BE REMOVED AFTER ERECTION.
14. FOR EQUIPMENT LAYOUT SEE DWG No.: CSA–233–PI–LY–0001.
15. WELDS: E49XX

LEGEND:

- WORK POINT
- PS–XXX PIPE SUPPORT NO.
- GRATING SPAN
- GRATING OPENING
- MC MOMENT CONNECTION
- PILE LOCATIONS

TYPE: FL–1	TYPE: FL–2
WPS–FC1	WPS–FC1
WPS–SM1	WPS–SM1
	E–671N

[redacted]

UPDATED: May 8, 2020 3:55:40 PM BY: Tdang
PRINTED: May 8, 2020 3:57:41 PM DWG NAME: P:\CSA\Design Drafting\Structural\ST–DR\CSA–233–ST–DR–0001–01–02 RevOc Fractionation Skid SK–233 _ Plan & Section Views.dwg

UPDATED: April 23, 2020 2:16:36 PM BY: Tdong
PRINTED: April 23, 2020 2:16:17 PM DWG NAME: P:\CSA\Design Drafting\Structural\ST-DR\CSA-233-ST-DR-0001-01-03 RevDB Fractionation Skid SK-233 _ Plan & Section Views.dwg

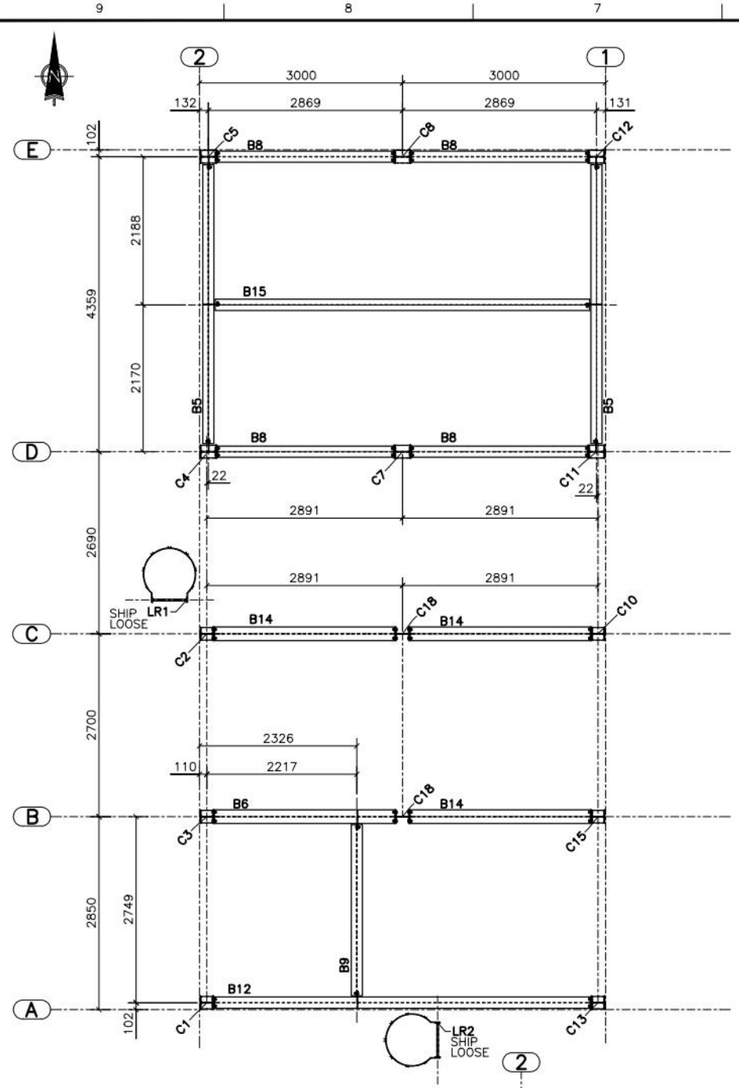

PLAN AT T.O.S EL. +3.400

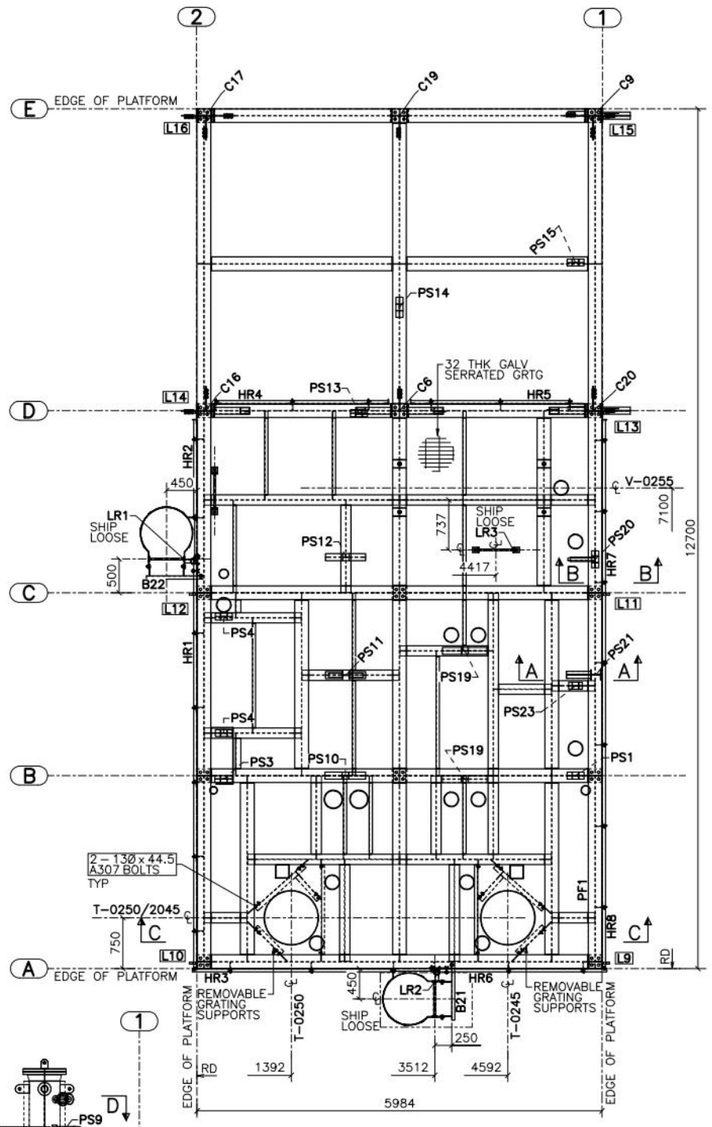

PLAN AT T.O.S EL. +4.100
+32 THK GRATING
(GRATING NOT SHOWN FOR CLARITY)



A – A

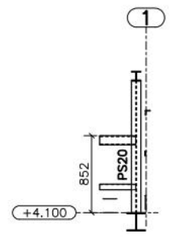

B – B

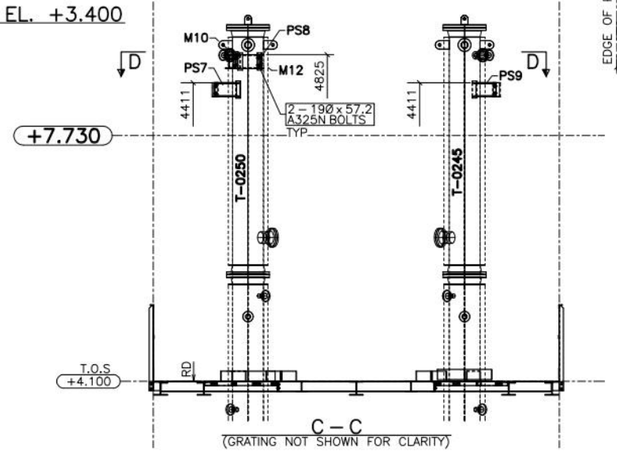

C – C
(GRATING NOT SHOWN FOR CLARITY)

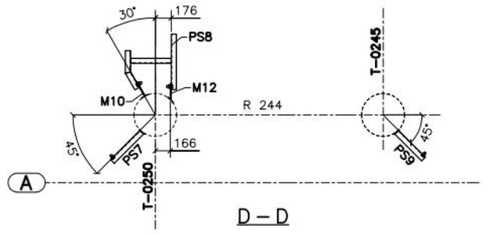

D – D

NOTES:

1. SURFACE PREPARATION AND PAINTING:
   DOC NO. TDE-EN-STD-7001 REV.4
   PAINT SYSTEM U-0
   SANDBLAST PER SSPC-SP6;
   PRIMER: N/A
   FINISH: 835 SERIES, 3-5 DFT MILS
   FINISH COLOR:
   - SKID, PLATFORMS, STRUCTURAL SUPPORTS & BOLTINGS ARE STANDARD GREY, RAL 7038
   - LADDERS/CAGES & HANDRAILS ARE SAFETY YELLOW, RAL 1021
2. THE SKID SHALL BE ADEQUATELY SUPPORTED BY PILE FOUNDATIONS DESIGNED BY OTHERS. THE QUANTITY AND LOCATION OF PILES MUST CONSIDER ALL APPLICABLE LOAD COMBINATIONS SUCH THAT ALLOWABLE BEAM DEFLECTION OR STRESS LIMITS ARE NOT EXCEEDED.
3. ALL UNSPECIFIED WELDS TO BE TYPE FL-2 (6mm CONTINUOUS FILLET WELD UNO).
4. WELD GAP APPLIED TO MATERIAL LIST.
5. USE STANDARD WELDING PROCEDURES: WPS-FC1, WPS-SM1.
6. REMOVE ALL WELD SLAG.
7. NDE REQUIREMENTS: MPI FOR LUGS, 100% RT ON SPLICES.
8. REFERENCE TDE STANDARD DWGS AS REQUIRED: TDE-EN-STD-3002.
9. SHIPPING WEIGHT: SK=33800kg, PF=17000 kg.
10. SHIPPING LIMITS: N/A.
11. UNLESS OTHERWISE INDICATED, SIZE OF HOLES: Ø22 U/N
12. MATERIAL NOTES: CSA G40.21M
13. TEMPORARY STEEL SHALL BE PAINTED ORANGE AND WILL BE REMOVED AFTER ERECTION.
14. FOR EQUIPMENT LAYOUT SEE DWG No.: CSA-233-PI-LY-0001.
15. WELDS: E49XX

LEGEND:

- WORK POINT
- PS-XXX PIPE SUPPORT NO.
- GRATING SPAN
- GRATING OPENING
- MC MOMENT CONNECTION
- PILE LOCATIONS

	TYPE: FL-1	TYPE: FL-2
		
	WPS-FC1	WPS-FC1
	WPS-SM1	WPS-SM1
		E-671N

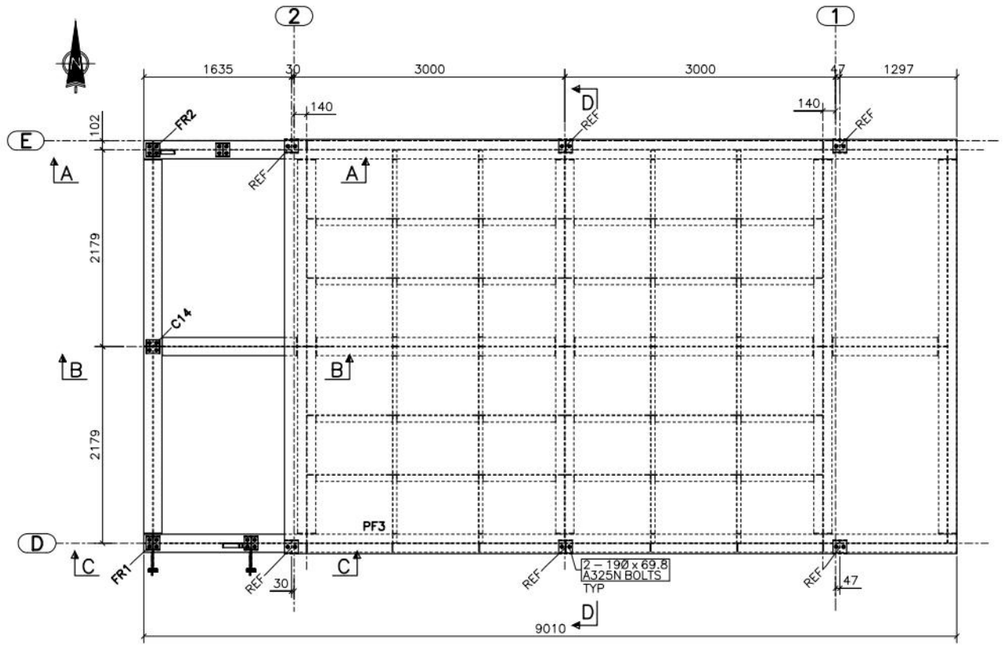

PLAN AT T.O.S EL. +6.100 (U.N.O)
(SHIP LOOSE)

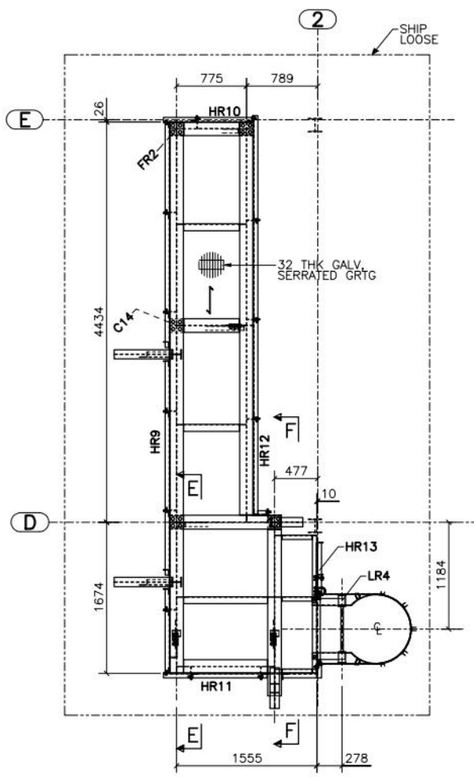

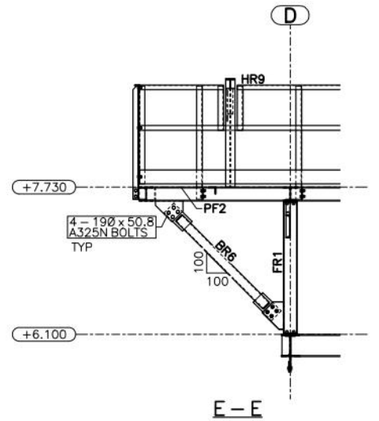

E – E

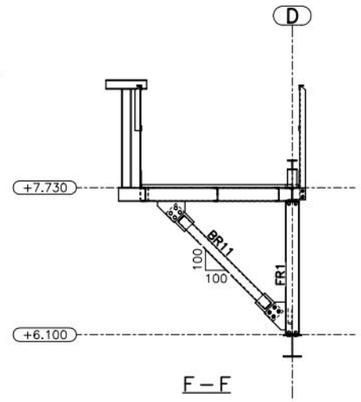

F – F

PLAN AT T.O.S EL. +7.730 (U.N.O)
(+32 THK GRATING)

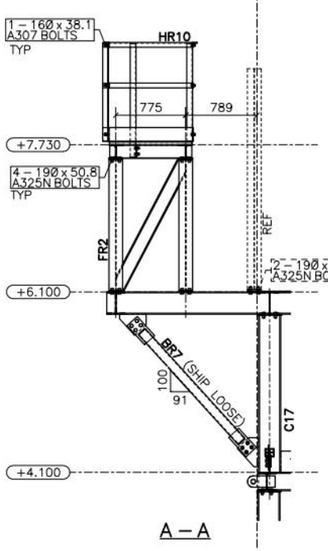

A – A

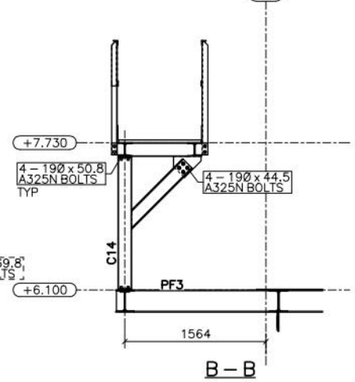

B – B

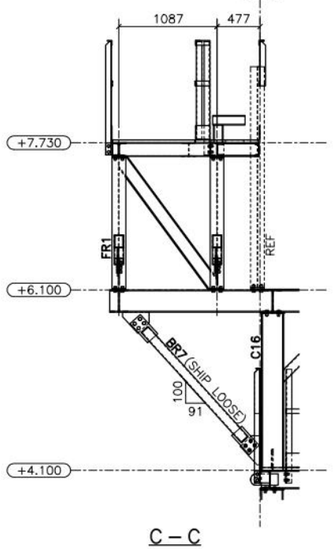

C – C

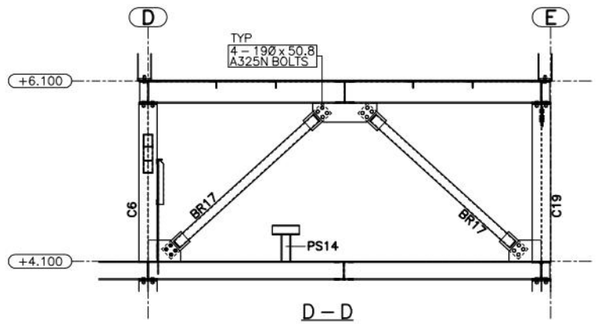

D – D

NOTES:

1. SURFACE PREPARATION AND PAINTING:
   DOC NO. TDE–EN–STD–7001 REV.4
   PAINT SYSTEM U–0
   SANDBLAST PER SSPC–SP6;
   PRIMER: N/A
   FINISH: 835 SERIES, 3–5 DFT MILS
   FINISH COLOR:
   – SKID, PLATFORMS, STRUCTURAL SUPPORTS & BOLTINGS ARE STANDARD GREY, RAL 7038
   – LADDERS/CAGES & HANDRAILS ARE SAFETY YELLOW, RAL 1021
2. THE SKID SHALL BE ADEQUATELY SUPPORTED BY PILE FOUNDATIONS DESIGNED BY OTHERS. THE QUANTITY AND LOCATION OF PILES MUST CONSIDER ALL APPLICABLE LOAD COMBINATIONS SUCH THAT ALLOWABLE BEAM DEFLECTION OR STRESS LIMITS ARE NOT EXCEEDED.
3. ALL UNSPECIFIED WELDS TO BE TYPE FL–2 (6mm CONTINUOUS FILLET WELD UNO).
4. WELD GAP APPLIED TO MATERIAL LIST.
5. USE STANDARD WELDING PROCEDURES: WPS–FC1, WPS–SM1.
6. REMOVE ALL WELD SLAG.
7. NDE REQUIREMENTS: MPI FOR LUGS, 100% RT ON SPLICES.
8. REFERENCE TDE STANDARD DWGS AS REQUIRED: TDE–EN–STD–3002.
9. SHIPPING WEIGHT: SK=33800kg, PF=17000 kg.
10. SHIPPING LIMITS: N/A.
11. UNLESS OTHERWISE INDICATED, SIZE OF HOLES: Ø22 U/N.
12. MATERIAL NOTES: CSA G40.21M
13. TEMPORARY STEEL SHALL BE PAINTED ORANGE AND WILL BE REMOVED AFTER ERECTION.
14. FOR EQUIPMENT LAYOUT SEE DWG No.: CSA–233–PI–LY–0001.
15. WELDS: E49XX

LEGEND:

- WORK POINT
- PS–XXX PIPE SUPPORT NO.
- GRATING SPAN
- GRATING OPENING
- MC MOMENT CONNECTION
- PILE LOCATIONS

TYPE: FL–1	TYPE: FL–2
WPS–FC1	WPS–FC1
WPS–SM1	WPS–SM1
	E–671N

[redacted]

UPDATED: April 23, 2020 2:20:39 PM BY: Tdong
PRINTED: April 23, 2020 3:11:42 PM DWG NAME: P:\CSA\Design Drafting\Structural\ST–DR\CSA–233–ST–DR–0001–01–04 Rev08 Fractionation Skid SK–233 _ Plan & Section Views.dwg

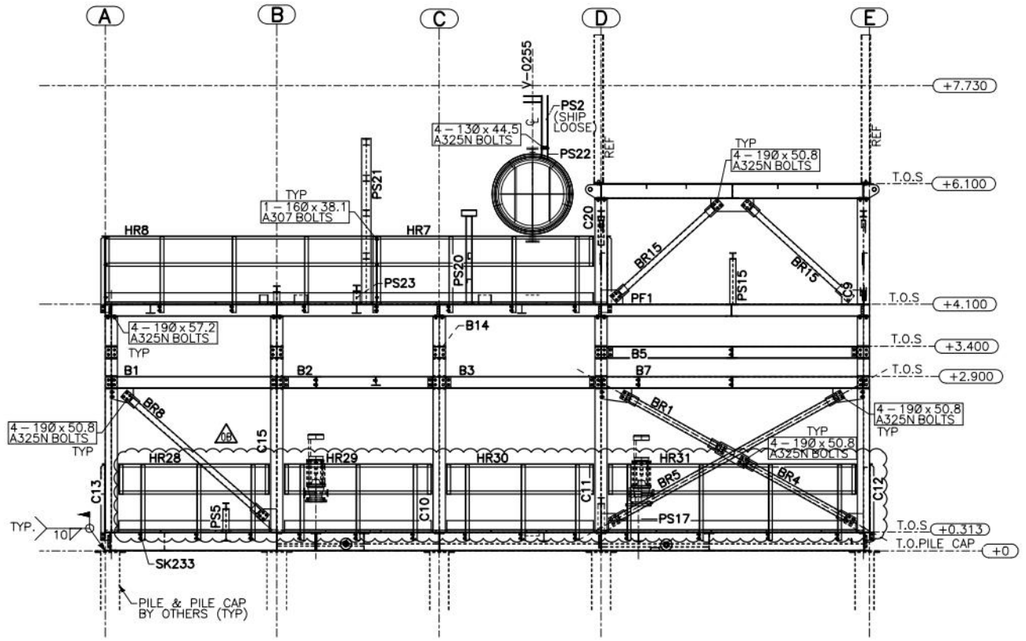

ELEVATION ON GRID 1
(LOOKING WEST)

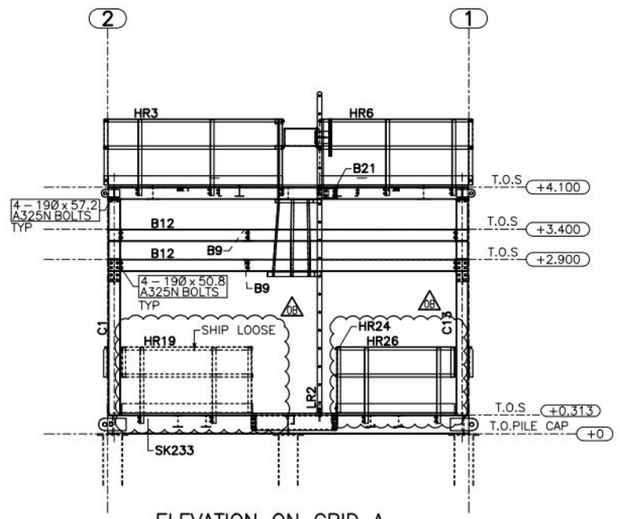

ELEVATION ON GRID A
(LOOKING NORTH)

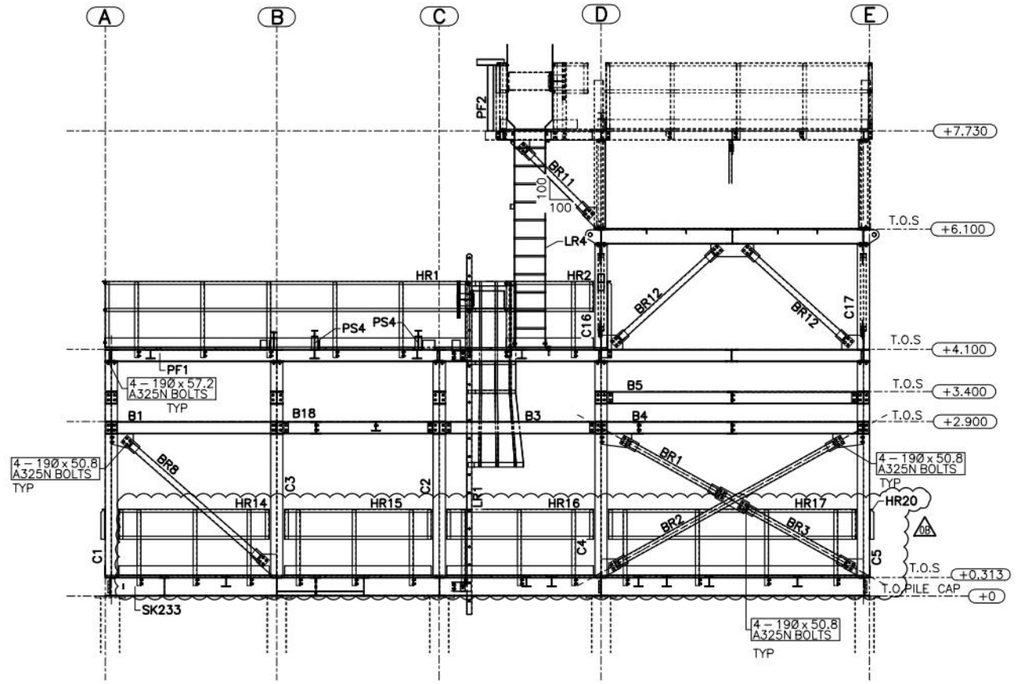

ELEVATION ON GRID 2
(LOOKING WEST)

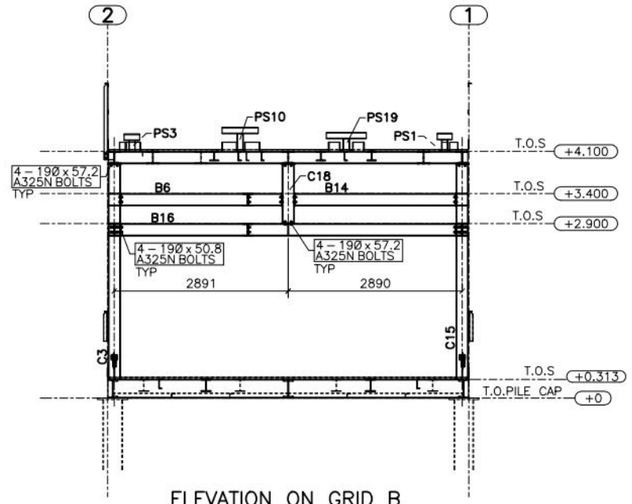

ELEVATION ON GRID B
(LOOKING NORTH)

NOTES:

1. SURFACE PREPARATION AND PAINTING:
   DOC NO. TDE-EN-STD-7001 REV.4
   PAINT SYSTEM U-0
   SANDBLAST PER SSPC-SP6;
   PRIMER: N/A
   FINISH: 835 SERIES, 3-5 DFT MILS
   FINISH COLOR:
   - SKID, PLATFORMS, STRUCTURAL SUPPORTS & BOLTINGS ARE STANDARD GREY, RAL 7038
   - LADDERS/CAGES & HANDRAILS ARE SAFETY YELLOW, RAL 1021
2. THE SKID SHALL BE ADEQUATELY SUPPORTED BY PILE FOUNDATIONS DESIGNED BY OTHERS. THE QUANTITY AND LOCATION OF PILES MUST CONSIDER ALL APPLICABLE LOAD COMBINATIONS SUCH THAT ALLOWABLE BEAM DEFLECTION OR STRESS LIMITS ARE NOT EXCEEDED.
3. ALL UNSPECIFIED WELDS TO BE TYPE FL-2 (6mm CONTINUOUS FILLET WELD UNO).
4. WELD GAP APPLIED TO MATERIAL LIST.
5. USE STANDARD WELDING PROCEDURES: WPS-FC1, WPS-SM1.
6. REMOVE ALL WELD SLAG.
7. NDE REQUIREMENTS: MPI FOR LUGS, 100% RT ON SPLICES.
8. REFERENCE TDE STANDARD DWGS AS REQUIRED: TDE-EN-STD-3002.
9. SHIPPING WEIGHT: SK=33800kg, PF=17000 kg.
10. SHIPPING LIMITS: N/A.
11. UNLESS OTHERWISE INDICATED, SIZE OF HOLES: Ø22 U/N.
12. MATERIAL NOTES: CSA G40.21M
13. TEMPORARY STEEL SHALL BE PAINTED ORANGE AND WILL BE REMOVED AFTER ERECTION.
14. FOR EQUIPMENT LAYOUT SEE DWG No.: CSA-233-PI-LY-0001.
15. WELDS: E49XX

LEGEND:

- WORK POINT
- (PS-XXX) PIPE SUPPORT NO.
- GRATING SPAN
- GRATING OPENING
- MC MOMENT CONNECTION
- PILE LOCATIONS

TYPE: FL-1	TYPE: FL-2
WPS-FC1	WPS-FC1
WPS-SM1	WPS-SM1
	E-671N

UPDATED: April 22, 2020 1:46:52 PM BY: Tdang
PRINTED: April 23, 2020 2:21:19 PM DWG NAME: P:\CSA\Design Drafting\Structural\ST-DR\CSA-233-ST-DR-0001-01-05 RevO8 Fractionation Skid SK-233 - Elevation Views.dwg

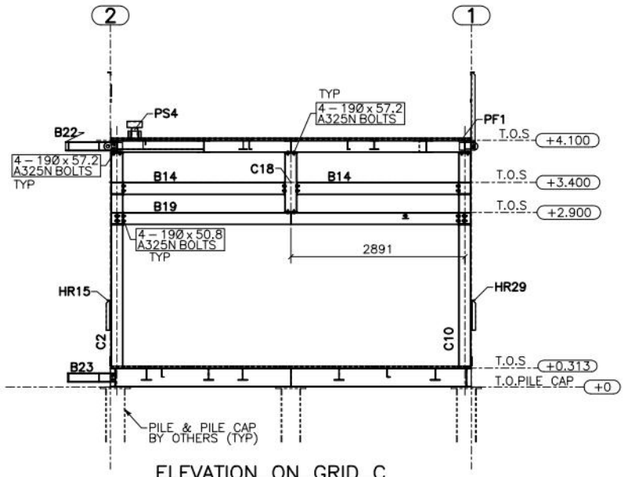

ELEVATION ON GRID C
(LOOKING NORTH)

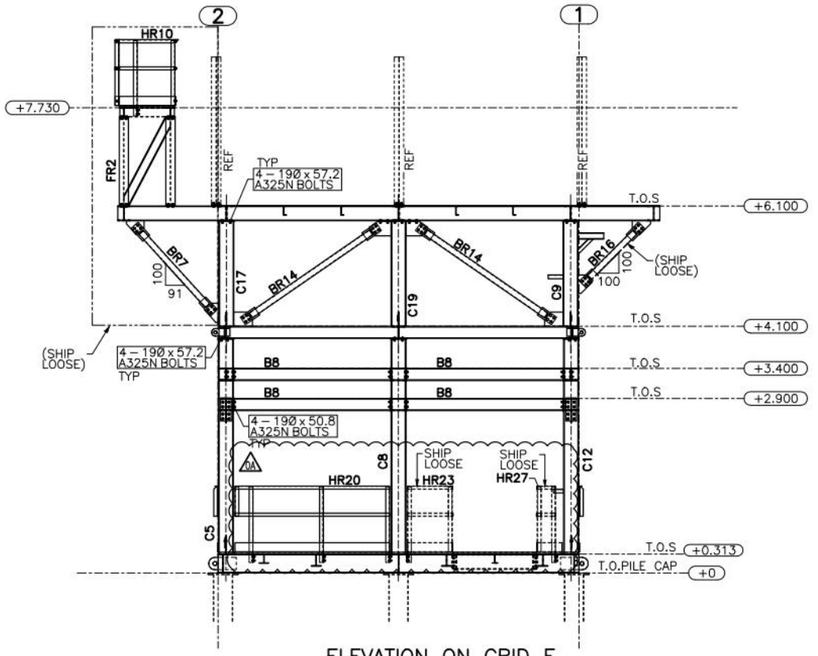

ELEVATION ON GRID E
(LOOKING NORTH)

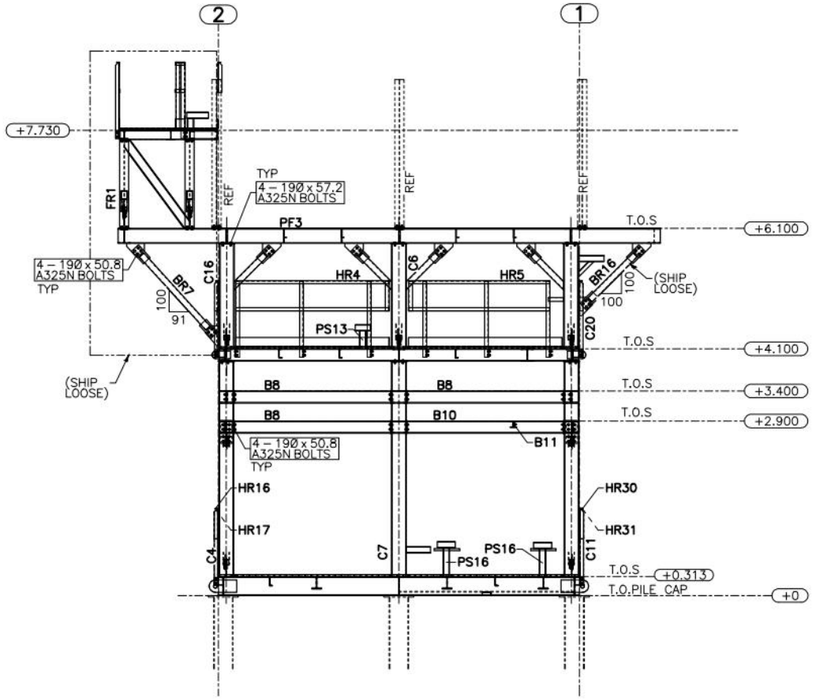

ELEVATION ON GRID D
(LOOKING NORTH)

NOTES:

1. SURFACE PREPARATION AND PAINTING:
   DOC NO. TDE-EN-STD-7001 REV.4
   PAINT SYSTEM U-0
   SANDBLAST PER SSPC-SP6;
   PRIMER: N/A
   FINISH: 835 SERIES, 3-5 DFT MILS
   FINISH COLOR:
   - SKID, PLATFORMS, STRUCTURAL SUPPORTS & BOLTINGS ARE STANDARD GREY, RAL 7038
   - LADDERS/CAGES & HANDRAILS ARE SAFETY YELLOW, RAL 1021
2. THE SKID SHALL BE ADEQUATELY SUPPORTED BY PILE FOUNDATIONS DESIGNED BY OTHERS. THE QUANTITY AND LOCATION OF PILES MUST CONSIDER ALL APPLICABLE LOAD COMBINATIONS SUCH THAT ALLOWABLE BEAM DEFLECTION OR STRESS LIMITS ARE NOT EXCEEDED.
3. ALL UNSPECIFIED WELDS TO BE TYPE FL-2 (6mm CONTINUOUS FILLET WELD UNO).
4. WELD GAP APPLIED TO MATERIAL LIST.
5. USE STANDARD WELDING PROCEDURES: WPS-FC1, WPS-SM1.
6. REMOVE ALL WELD SLAG.
7. NDE REQUIREMENTS: MPI FOR LUGS, 100% RT ON SPLICES.
8. REFERENCE TDE STANDARD DWGS AS REQUIRED: TDE-EN-STD-3002.
9. SHIPPING WEIGHT: SK=33800kg, PF=17000kg.
10. SHIPPING LIMITS: N/A.
11. UNLESS OTHERWISE INDICATED, SIZE OF HOLES: Ø22 U/N.
12. MATERIAL NOTES: CSA G40.21M
13. TEMPORARY STEEL SHALL BE PAINTED ORANGE AND WILL BE REMOVED AFTER ERECTION.
14. FOR EQUIPMENT LAYOUT SEE DWG No.: CSA-233-PI-LY-0001.
15. WELDS: E49XX

LEGEND:

- WORK POINT
- PS-XXX — PIPE SUPPORT NO.
- GRATING SPAN
- GRATING OPENING
- MC — MOMENT CONNECTION
- PILE LOCATIONS

TYPE: FL-1	TYPE: FL-2
WPS-FC1	WPS-FC1
WPS-SM1	WPS-SM1
	E-671N

UPDATED: April 22, 2020 1:49:24 PM BY: Tdang
PRINTED: April 23, 2020 2:21:40 PM DWG NAME: P:\CSA\Design Drafting\Structural\ST-DR\CSA-233-ST-DR-0001-01-06 RevDA Fractionation Skid SK-233 _ Elevation Views.dwg

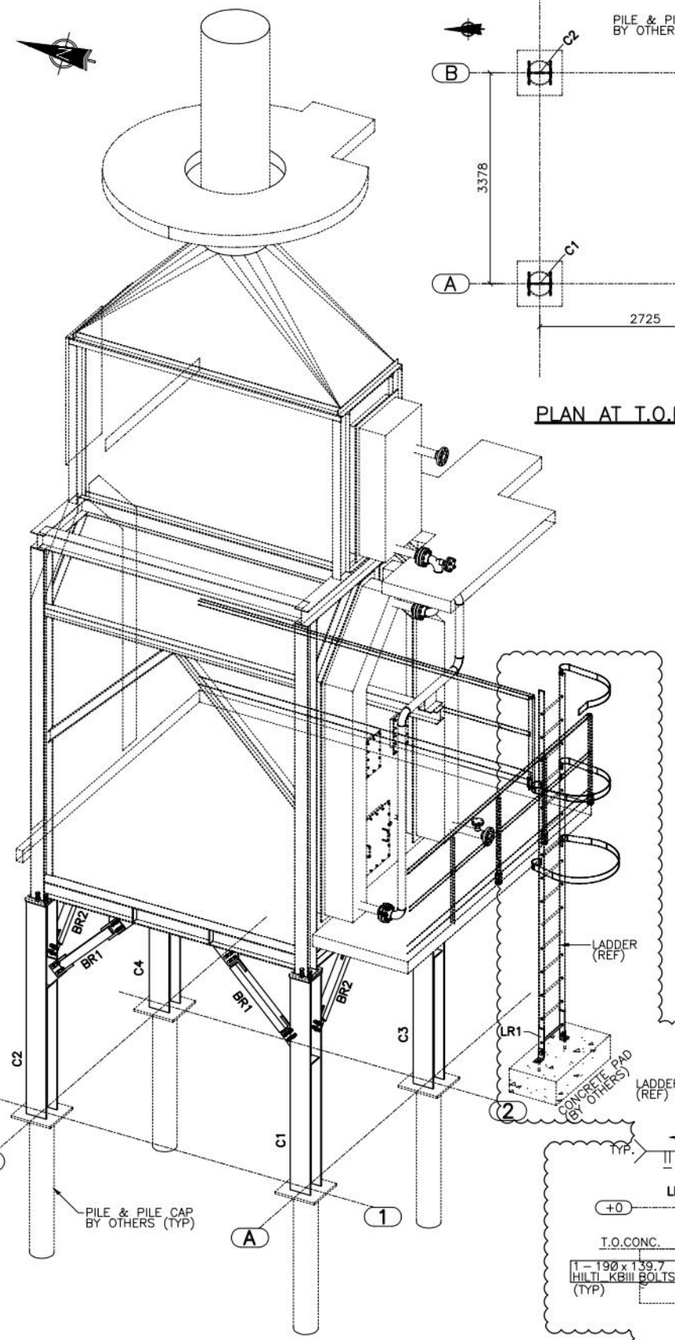

CRUDE FEED HEATER H-0235 SUPPORTS – ISOMETRIC VIEW
(LOOKING FROM SOUTHWEST)

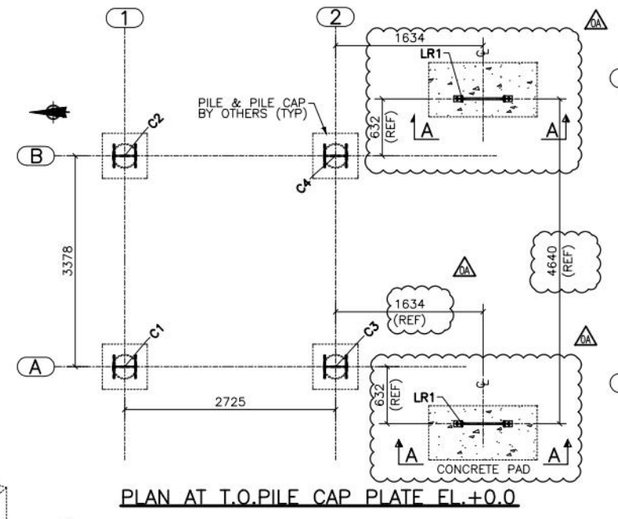

PLAN AT T.O.PILE CAP PLATE EL.+0.0

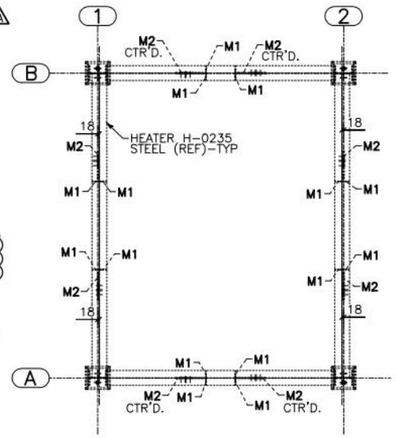

PLAN AT T.O.S EL. +2.743

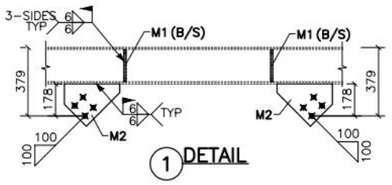

1 DETAIL

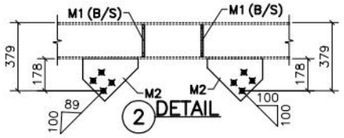

2 DETAIL

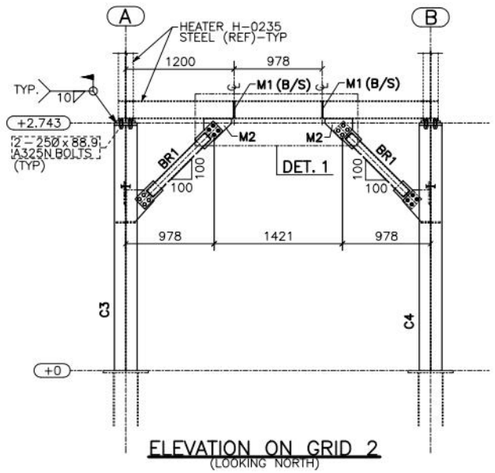

ELEVATION ON GRID 2
(LOOKING NORTH)

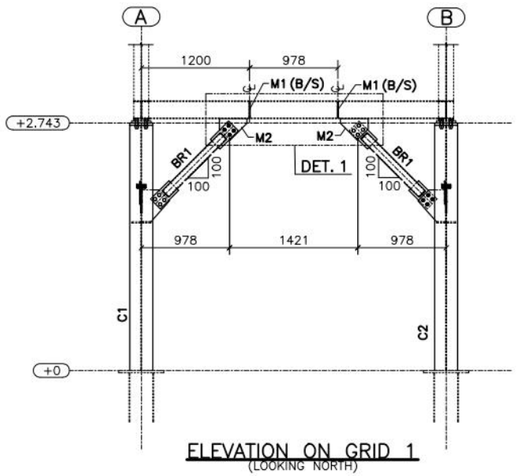

ELEVATION ON GRID 1
(LOOKING NORTH)

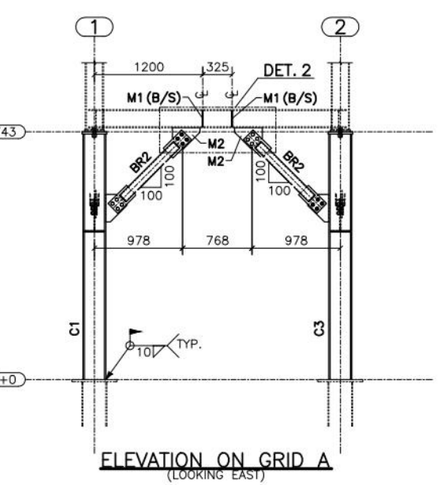

ELEVATION ON GRID A
(LOOKING EAST)

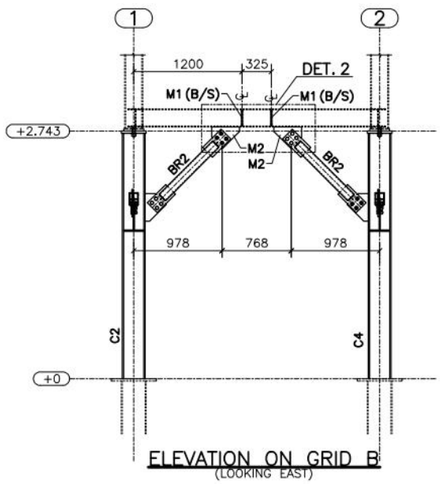

ELEVATION ON GRID B
(LOOKING EAST)

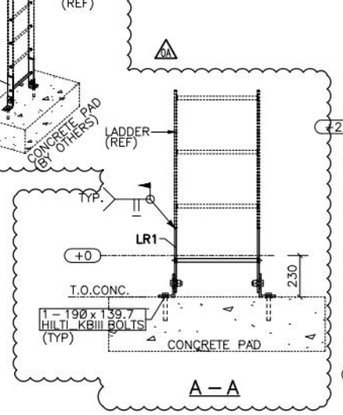

A – A

NOTES:

1. SURFACE PREPARATION AND PAINTING:
   DOC NO. TDE-EN-STD-7001 REV.4
   PAINT SYSTEM U-0
   SANDBLAST PER SSPC-SP6;
   PRIMER: N/A
   FINISH: 835 SERIES, 3-5 DFT MILS
   FINISH COLOR:
   - SKID, PLATFORMS, STRUCTURAL SUPPORTS & BOLTINGS ARE STANDARD GREY, RAL 7038
   - LADDERS/CAGES & HANDRAILS ARE SAFETY YELLOW, RAL 1021
2. THE SKID SHALL BE ADEQUATELY SUPPORTED BY PILE FOUNDATIONS DESIGNED BY OTHERS. THE QUANTITY AND LOCATION OF PILES MUST CONSIDER ALL APPLICABLE LOAD COMBINATIONS SUCH THAT ALLOWABLE BEAM DEFLECTION OR STRESS LIMITS ARE NOT EXCEEDED.
3. ALL UNSPECIFIED WELDS TO BE TYPE FL-2 (6mm CONTINUOUS FILLET WELD UNO).
4. WELD GAP APPLIED TO MATERIAL LIST.
5. USE STANDARD WELDING PROCEDURES: WPS-FC1, WPS-SM1.
6. REMOVE ALL WELD SLAG.
7. NDE REQUIREMENTS: MPI FOR LUGS, 100% RT ON SPLICES.
8. REFERENCE TDE STANDARD DWGS AS REQUIRED: TDE-EN-STD-3002.
9. SHIPPING WEIGHT: 1219 kg.
10. SHIPPING LIMITS: N/A.
11. UNLESS OTHERWISE INDICATED, SIZE OF HOLES: Ø22 U/N
12. MATERIAL NOTES: CSA G40.21M
13. TEMPORARY STEEL SHALL BE PAINTED ORANGE AND WILL BE REMOVED AFTER ERECTION.
14. FOR EQUIPMENT LAYOUT SEE DWG No.: CSA-235-PI-LY-0001.
15. WELDS: E49XX

LEGEND:

- WORK POINT
- PS-XXX — PIPE SUPPORT NO.
- GRATING SPAN
- GRATING OPENING
- MC — MOMENT CONNECTION
- PILE LOCATIONS

	TYPE: FL-1	TYPE: FL-2
	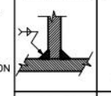	
	WPS-FC1	WPS-FC1
	WPS-SM1	WPS-SM1
		E-671N

UPDATED: May 25, 2020 5:12:28 PM BY: Tdong
PRINTED: May 25, 2020 5:17:06 PM DWG NAME: P:\CSA\Design Drafting\Structural\ST-DR\CSA-235-ST-DR-0001-01-01 RevOA Crude Feed Heater H-0235 Supports - Isometric, Plan, Elevation Views.dwg

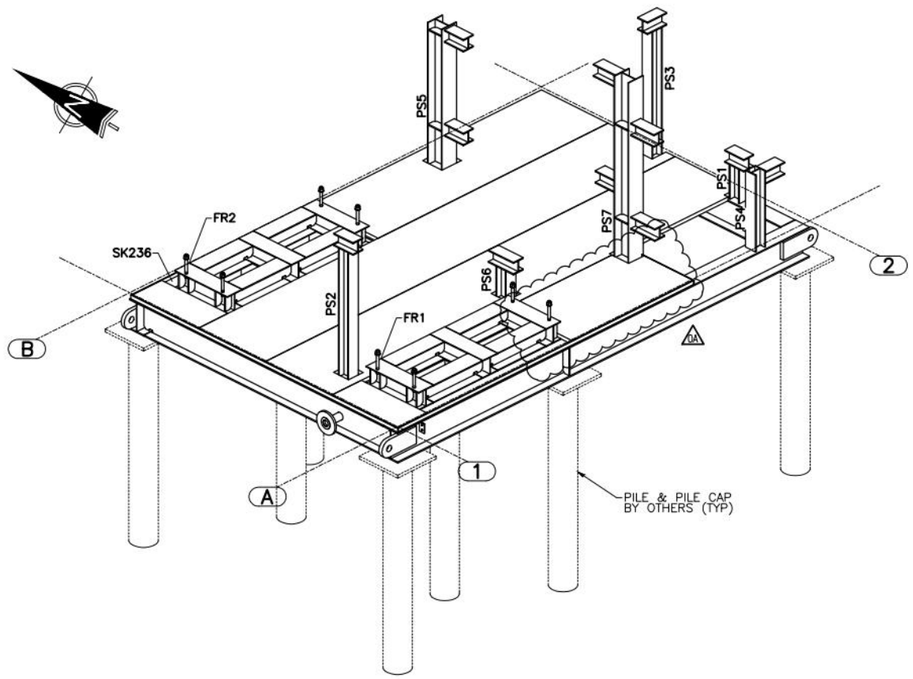

CRUDE FEED PUMP SKID SK-236 - ISOMETRIC VIEW
(LOOKING FROM SOUTHWEST)

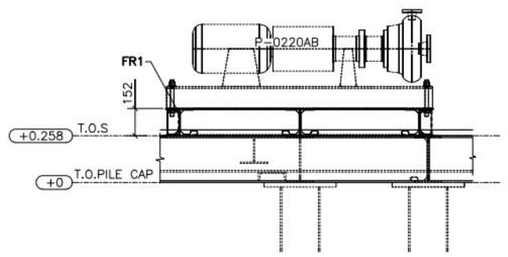

A - A

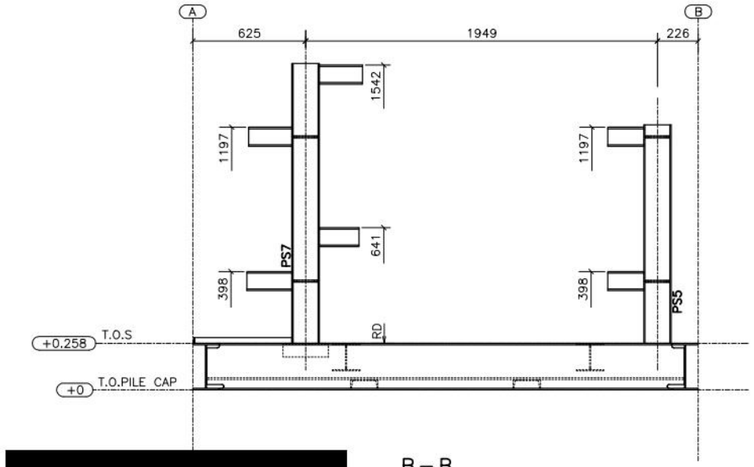

B - B

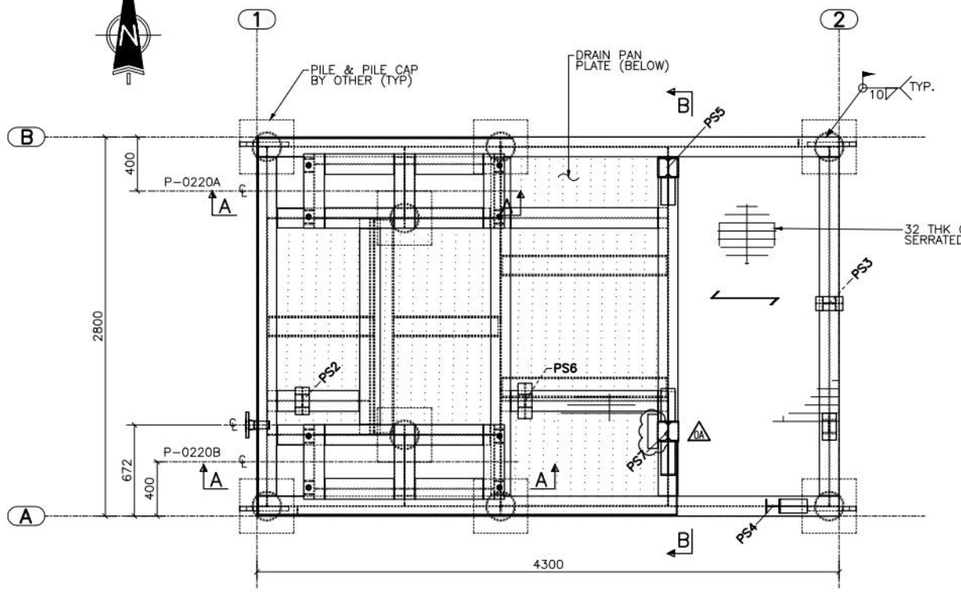

PLAN AT T.O.S EL.+0.258
(+32 THK GRATING)

[redacted]

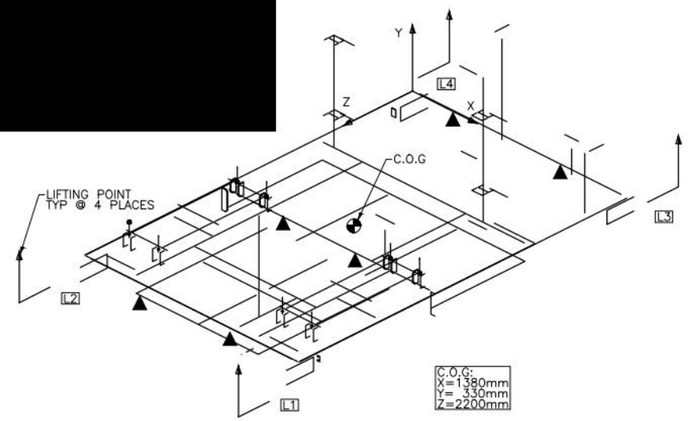

LIFTING & TRANSPORTATION DIAGRAM

NOTES:

1. SURFACE PREPARATION AND PAINTING:
   DOC NO. TDE-EN-STD-7001 REV.4
   PAINT SYSTEM U-0
   SANDBLAST PER SSPC-SP6;
   PRIMER: N/A
   FINISH: 835 SERIES, 3-5 DFT MILS
   FINISH COLOR:
   - SKID, PLATFORMS, STRUCTURAL SUPPORTS & BOLTINGS ARE STANDARD GREY, RAL 7038
   - LADDERS/CAGES & HANDRAILS ARE SAFETY YELLOW, RAL 1021
2. THE SKID SHALL BE ADEQUATELY SUPPORTED BY PILE FOUNDATIONS DESIGNED BY OTHERS. THE QUANTITY AND LOCATION OF PILES MUST CONSIDER ALL APPLICABLE LOAD COMBINATIONS SUCH THAT ALLOWABLE BEAM DEFLECTION OR STRESS LIMITS ARE NOT EXCEEDED.
3. ALL UNSPECIFIED WELDS TO BE TYPE FL-2 (6mm CONTINUOUS FILLET WELD UNO).
4. WELD GAP APPLIED TO MATERIAL LIST.
5. USE STANDARD WELDING PROCEDURES: WPS-FC1, WPS-SM1.
6. REMOVE ALL WELD SLAG.
7. NDE REQUIREMENTS: MPI FOR LUGS, 100% RT ON SPLICES.
8. REFERENCE TDE STANDARD DWGS AS REQUIRED: TDE-EN-STD-3002.
9. SHIPPING WEIGHT: 4400 kg.
10. SHIPPING LIMITS: N/A.
11. UNLESS OTHERWISE INDICATED, SIZE OF HOLES: Ø22 U/N
12. MATERIAL NOTES: CSA G40.21M
13. TEMPORARY STEEL SHALL BE PAINTED ORANGE AND WILL BE REMOVED AFTER ERECTION.
14. FOR EQUIPMENT LAYOUT SEE DWG No.: CSA-236-PI-LY-0001.
15. WELDS: E49XX

LEGEND:

- WORK POINT
- PS-XXX PIPE SUPPORT NO.
- GRATING SPAN
- GRATING OPENING
- MC MOMENT CONNECTION
- PILE LOCATIONS

TYPE: FL-1	TYPE: FL-2
WPS-FC1	WPS-FC1
WPS-SM1	WPS-SM1
	E-671N

EQUIPMENT	WEIGHT [kg] DRY [SHIPPING]
P-0220A	394
P-0220B	394
TOTAL	788

ITEM	SKID WEIGHT [kg] DURING SHIPPING:
structural steel	2233
cable tray	25
equipment	788
piping	1354
TOTAL	4400

LIFTING LUG	SHIPPING LOAD [kgf]	LIFTING LUG TYPE
L1	1220	HL1
L2	1120	HL1
L3	1060	HL1
L4	1000	HL1

SK-236

[redacted]

UPDATED: March 18, 2020 10:11:14 AM BY: Tdang
PRINTED: March 18, 2020 10:15:25 AM DWG NAME: P:\CSA\Design Drafting\Structural\ST-DR\CSA-236-ST-DR-0001-01-01 RevOA Crude Feed Pump Skid SK-236 - Isometric, Plan, Section Views.dwg

UPDATED: March 4, 2020 3:11:47 PM BY: Tdong
PRINTED: March 5, 2020 9:42:45 AM DWG NAME: P:\CSA\Design Drafting\Structural\ST-DR\CSA-238-ST-DR-0001-01-01 Rev0 Metering Skid SK-238 - Isometric, Plan, Section Views.dwg

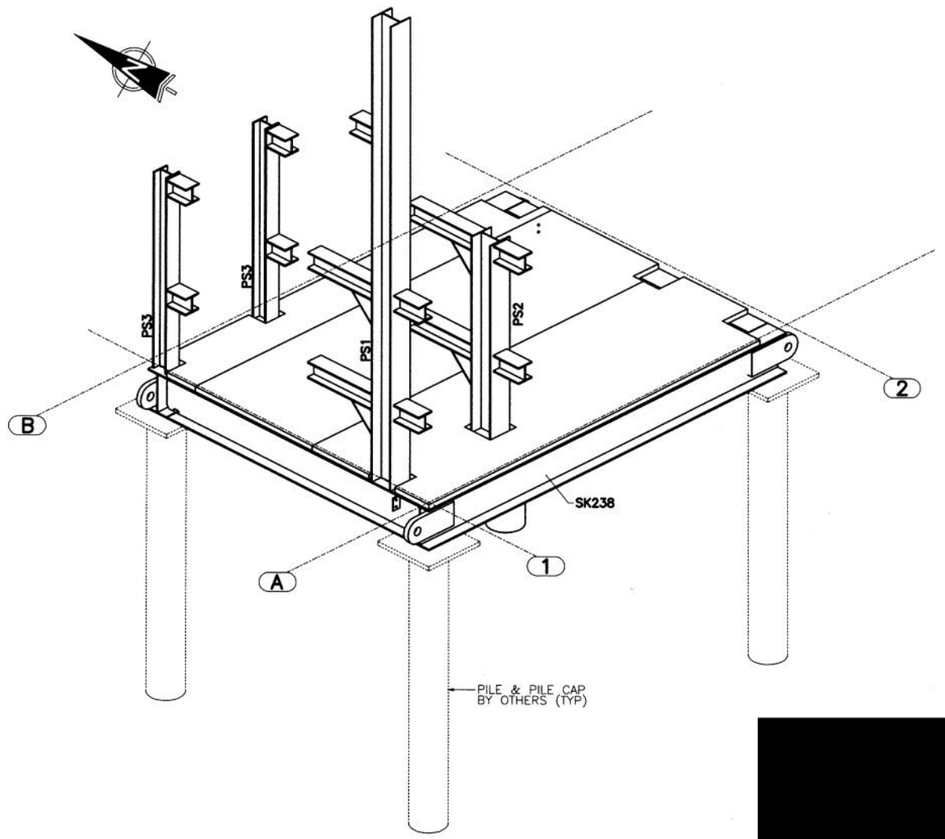

METERING SKID SK-238 – ISOMETRIC VIEW
(LOOKING FROM SOUTHWEST)

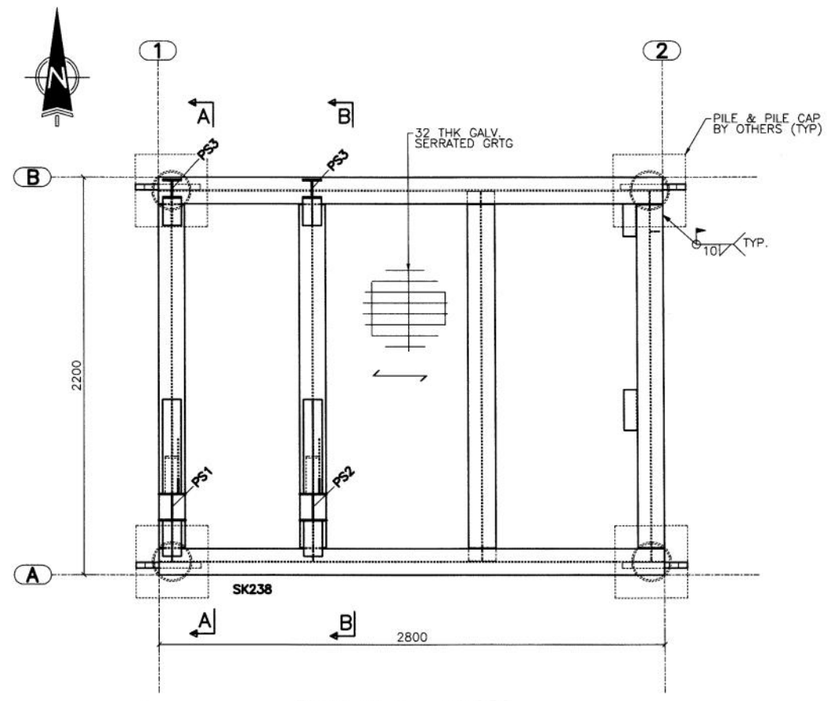

PLAN AT EL. +0.258

[redacted]

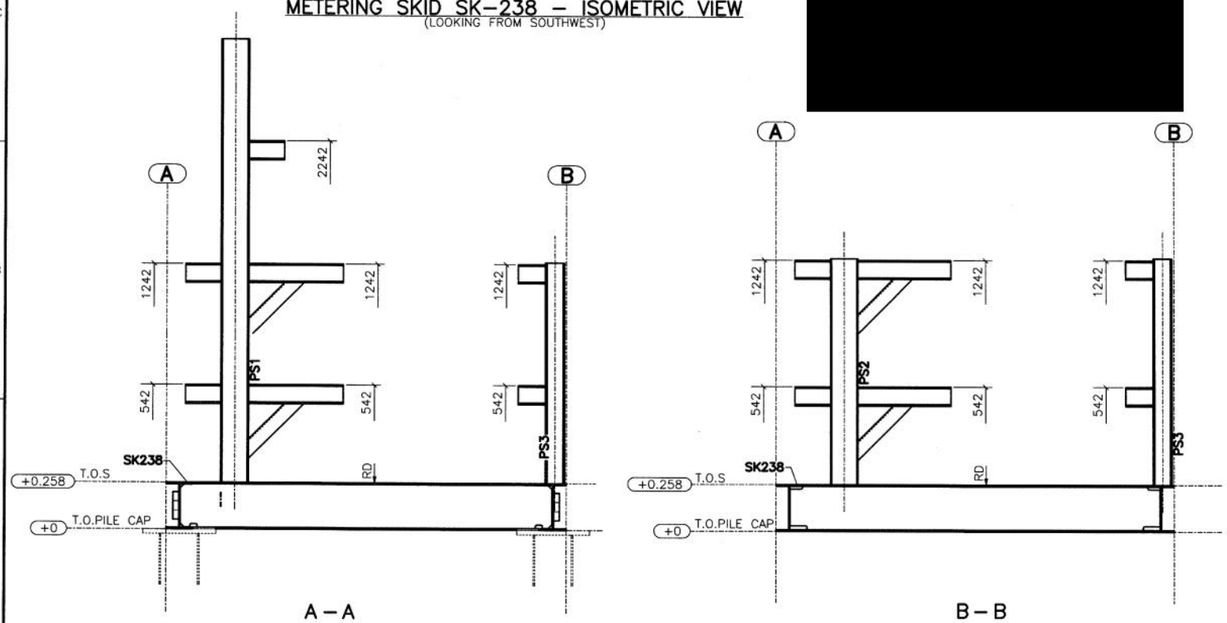

A – A

B – B

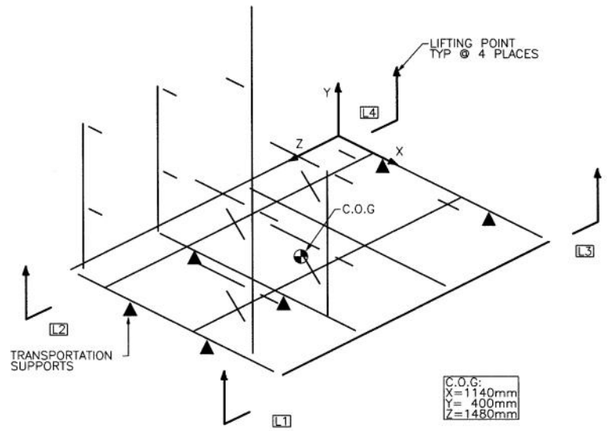

LIFTING & TRANSPORTATION DIAGRAM

NOTES:

1. SURFACE PREPARATION AND PAINTING:
   DOC NO. TDE-EN-STD-7001 REV.4
   PAINT SYSTEM U-0
   SANDBLAST PER SSPC-SP6;
   PRIMER: N/A
   FINISH: 835 SERIES, 3-5 DFT MILS
   FINISH COLOR:
   - SKID, PLATFORMS, STRUCTURAL SUPPORTS & BOLTINGS ARE STANDARD GREY, RAL 7038
   - LADDERS/CAGES & HANDRAILS ARE SAFETY YELLOW, RAL 1021
2. THE SKID SHALL BE ADEQUATELY SUPPORTED BY PILE FOUNDATIONS DESIGNED BY OTHERS. THE QUANTITY AND LOCATION OF PILES MUST CONSIDER ALL APPLICABLE LOAD COMBINATIONS SUCH THAT ALLOWABLE BEAM DEFLECTION OR STRESS LIMITS ARE NOT EXCEEDED.
3. ALL UNSPECIFIED WELDS TO BE TYPE FL-2 (6mm CONTINUOUS FILLET WELD UNO).
4. WELD GAP APPLIED TO MATERIAL LIST.
5. USE STANDARD WELDING PROCEDURES: WPS-FC1, WPS-SM1.
6. REMOVE ALL WELD SLAG.
7. NDE REQUIREMENTS: MPI FOR LUGS, 100% RT ON SPLICES.
8. REFERENCE TDE STANDARD DWGS AS REQUIRED: TDE-EN-STD-3002.
9. SHIPPING WEIGHT: 2020 kg.
10. SHIPPING LIMITS: N/A.
11. UNLESS OTHERWISE INDICATED, SIZE OF HOLES: Ø22 U/N.
12. MATERIAL NOTES: CSA G40.21M
13. TEMPORARY STEEL SHALL BE PAINTED ORANGE AND WILL BE REMOVED AFTER ERECTION.
14. FOR EQUIPMENT LAYOUT SEE DWG No.: CSA-238-PI-LY-0001.
15. WELDS: E49XX

LEGEND:

- WORK POINT
- PS-XXX PIPE SUPPORT NO.
- GRATING SPAN
- GRATING OPENING
- MC MOMENT CONNECTION
- PILE LOCATIONS

TYPE: FL-1	TYPE: FL-2
WPS-FC1	WPS-FC1
WPS-SM1	WPS-SM1
	E-671N

ITEM	SKID WEIGHT [kg] DURING SHIPPING:
structural steel	1055
cable tray	20
piping	945
TOTAL	2020

LIFTING LUG	SHIPPING LOAD [kgf]	LIFTING LUG TYPE
L1	630	HL1
L2	490	HL1
L3	480	HL1
L4	420	HL1

SK-238

[redacted]

UPDATED: April 20, 2020 17:12:22 BY: Jsulinski

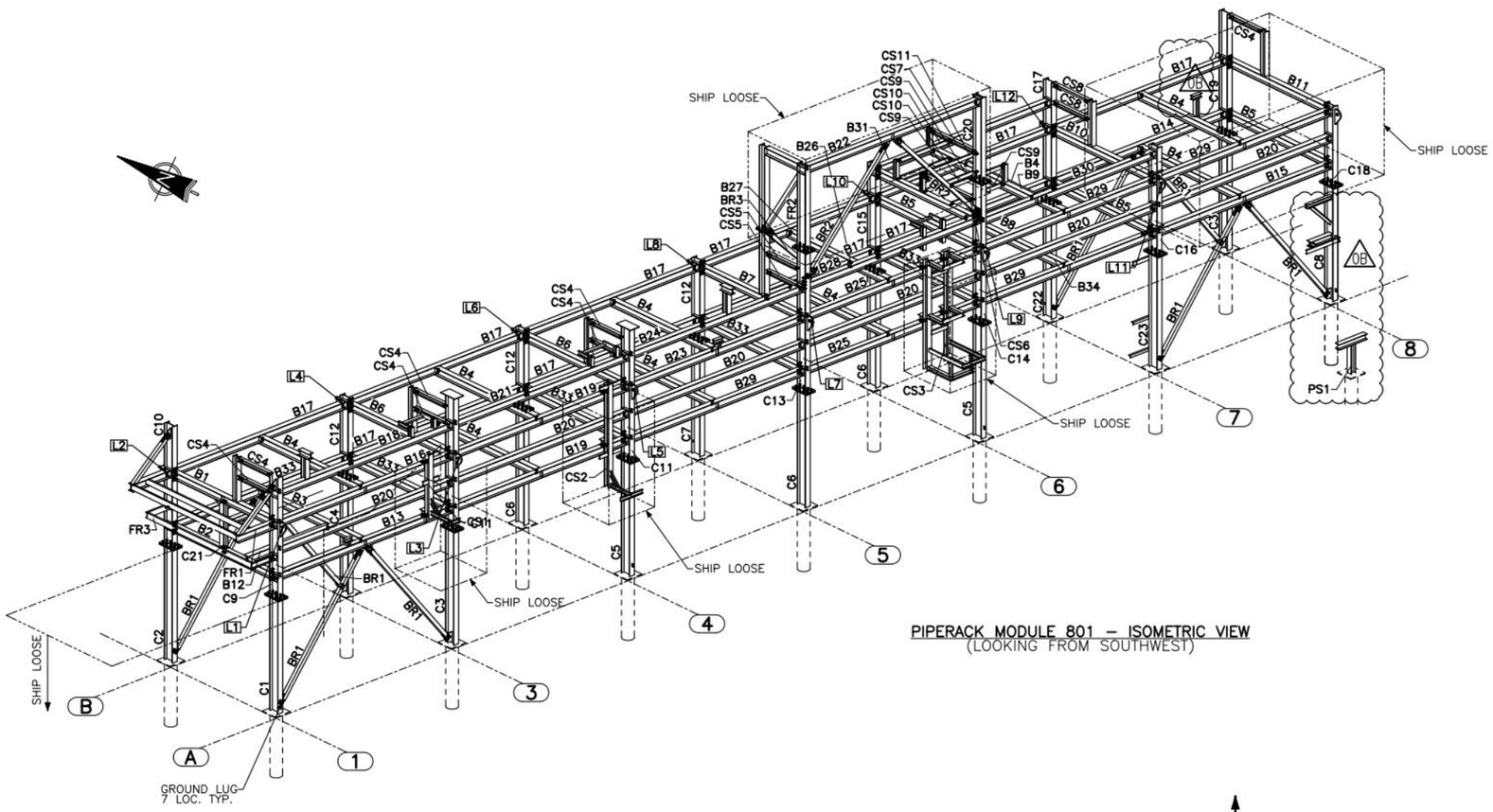

PIPERACK MODULE 801 – ISOMETRIC VIEW
(LOOKING FROM SOUTHWEST)

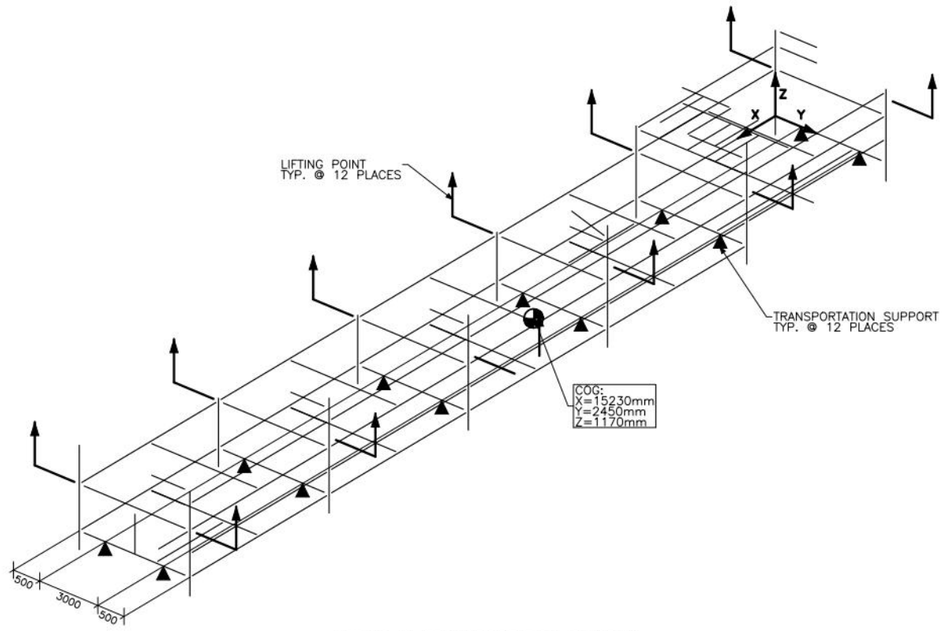

LIFTING & TRANSPORTATION DIAGRAM
(LOOKING FROM SOUTHWEST)

[redacted]

NOTES:

1. SURFACE PREPARATION AND PAINTING:
   DOC NO. TDE–EN–STD–7001 REV.4
   PAINT SYSTEM U–0
   SANDBLAST PER SSPC–SP6;
   PRIMER: N/A
   FINISH: 835 SERIES, 3–5 DFT MILS
   FINISH COLOR:
   – SKID, PLATFORMS, STRUCTURAL SUPPORTS & BOLTINGS ARE STANDARD GREY, RAL 7038
   – LADDERS/CAGES & HANDRAILS ARE SAFETY YELLOW, RAL 1021
2. THE SKID SHALL BE ADEQUATELY SUPPORTED BY PILE FOUNDATIONS DESIGNED BY OTHERS. THE QUANTITY AND LOCATION OF PILES MUST CONSIDER ALL APPLICABLE LOAD COMBINATIONS SUCH THAT ALLOWABLE BEAM DEFLECTION OR STRESS LIMITS ARE NOT EXCEEDED.
3. ALL UNSPECIFIED WELDS TO BE TYPE FL–2 (6mm CONTINUOUS FILLET WELD UNO).
4. WELD GAP APPLIED TO MATERIAL LIST.
5. USE STANDARD WELDING PROCEDURES: WPS–FC1, WPS–SM1.
6. REMOVE ALL WELD SLAG.
7. NDE REQUIREMENTS: MPI FOR LUGS, 100% RT ON SPLICES.
8. REFERENCE TDE STANDARD DWGS AS REQUIRED: TDE–EN–STD–3002.
9. SHIPPING WEIGHT: 33000 kg.
10. SHIPPING LIMITS: N/A.
11. UNLESS OTHERWISE INDICATED, SIZE OF HOLES: Ø22 U/N.
12. MATERIAL NOTES: CSA G40.21M
13. TEMPORARY STEEL SHALL BE PAINTED ORANGE AND WILL BE REMOVED AFTER ERECTION.
14. FOR EQUIPMENT LAYOUT SEE DWG No.: CSA–801–PI–LY–0001.
15. WELDS: E49XX

LEGEND:

- WORK POINT
- PS–XXX — PIPE SUPPORT NO.
- GRATING SPAN
- GRATING OPENING
- MC — MOMENT CONNECTION
- PILE LOCATIONS

	TYPE: FL–1	TYPE: FL–2
	WPS–FC1	WPS–FC1
	WPS–SM1	WPS–SM1
		E–671N

ITEM	SKID WEIGHT [kg] DURING SHIPPING:
STRUCTURAL STEEL	11700
SHIP LOOSE STEEL	6300
PIPING	19600
CABLE TRAY	1700
TOTAL	33000

LIFTING LUG	SHIPPING LOAD [kgf]	LIFTING LUG TYPE
L1	2600	19–HL4
L2	2000	19–HL4
L3	4000	19–HL4
L4	2100	19–HL4
L5	4000	19–HL4
L6	1800	19–HL4
L7	3600	19–HL4
L8	2300	19–HL4
L9	3800	19–HL4
L10	2700	19–HL4
L11	1900	19–HL4
L12	1900	19–HL4

[redacted]

PRINTED: April 21, 2020 07:34:02 DWG NAME: P:\CSA\Design Drafting\Structural\ST-DR\CSA-801-ST-DR-0001-01-01 RevDB Piperack PR-801 Isometric View.dwg

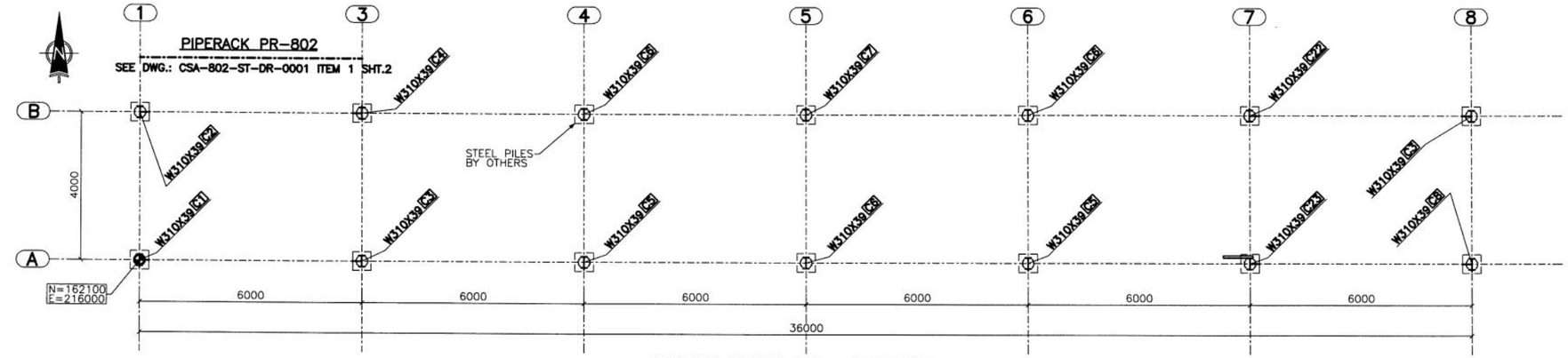

PIPERACK MODULE 801 – PLAN VIEW
T.O.PILE EL.=0.000m

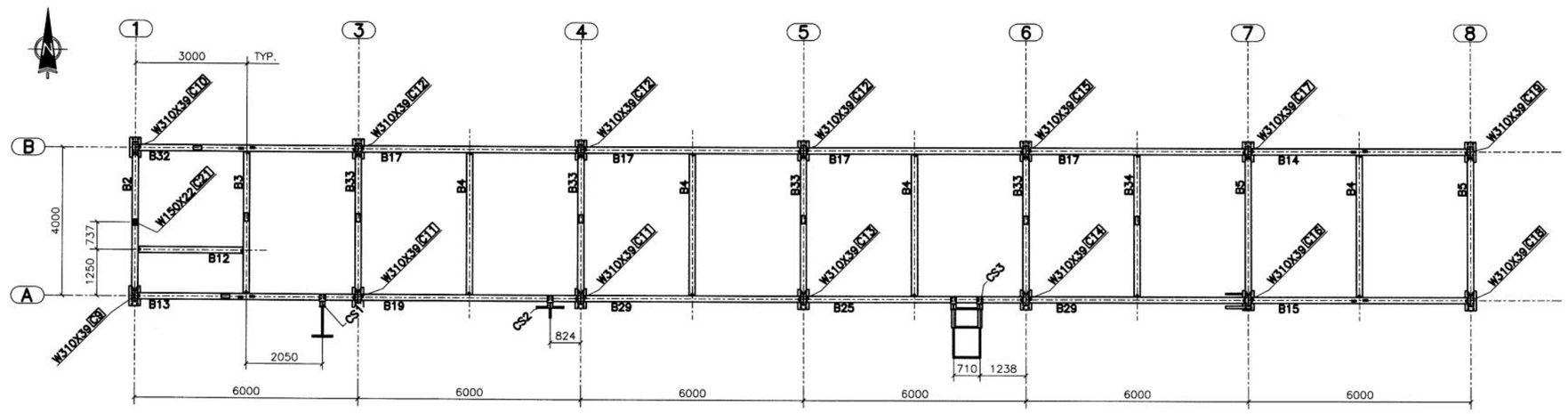

PIPERACK MODULE 801 – PLAN VIEW
T.O.STEEL EL.=3.900m U.N.O.

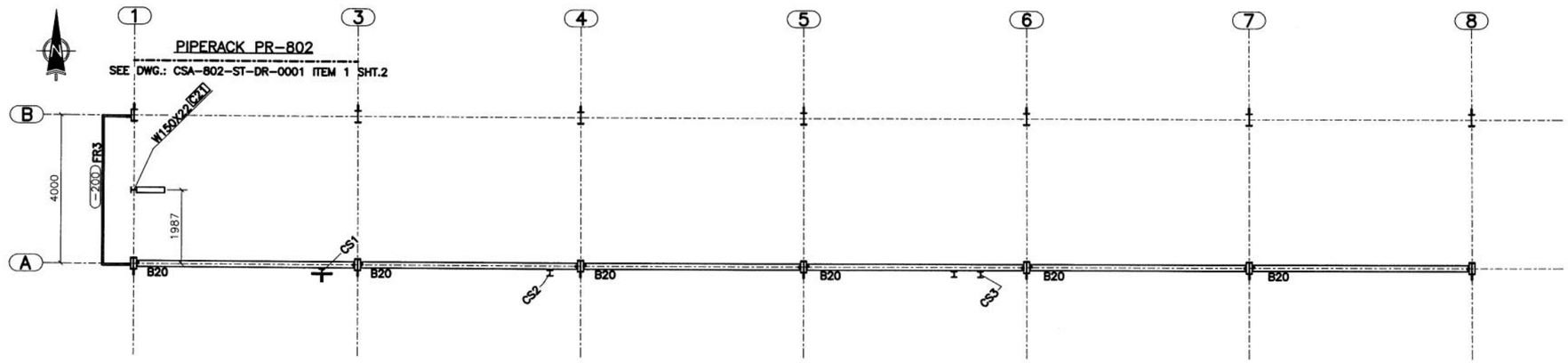

PIPERACK MODULE 801 – PLAN VIEW
T.O.STEEL EL.=4.650m U.N.O.

NOTES:

1. SURFACE PREPARATION AND PAINTING:
   DOC NO. TDE-EN-STD-7001 REV.4
   PAINT SYSTEM U-0
   SANDBLAST PER SSPC-SP6;
   PRIMER: N/A
   FINISH: 835 SERIES, 3-5 DFT MILS
   FINISH COLOR:
   - SKID, PLATFORMS, STRUCTURAL SUPPORTS & BOLTINGS ARE STANDARD GREY, RAL 7038
   - LADDERS/CAGES & HANDRAILS ARE SAFETY YELLOW, RAL 1021
2. THE SKID SHALL BE ADEQUATELY SUPPORTED BY PILE FOUNDATIONS DESIGNED BY OTHERS. THE QUANTITY AND LOCATION OF PILES MUST CONSIDER ALL APPLICABLE LOAD COMBINATIONS SUCH THAT ALLOWABLE BEAM DEFLECTION OR STRESS LIMITS ARE NOT EXCEEDED.
3. ALL UNSPECIFIED WELDS TO BE TYPE FL-2 (6mm CONTINUOUS FILLET WELD UNO).
4. WELD GAP APPLIED TO MATERIAL LIST.
5. USE STANDARD WELDING PROCEDURES: WPS-FC1, WPS-SM1.
6. REMOVE ALL WELD SLAG.
7. NDE REQUIREMENTS: MPI FOR LUGS, 100% RT ON SPLICES.
8. REFERENCE TDE STANDARD DWGS AS REQUIRED: TDE-EN-STD-3002.
9. SHIPPING WEIGHT: 33000 kg.
10. SHIPPING LIMITS: N/A.
11. UNLESS OTHERWISE INDICATED, SIZE OF HOLES: Ø22 U/N.
12. MATERIAL NOTES: CSA G40.21M
13. TEMPORARY STEEL SHALL BE PAINTED ORANGE AND WILL BE REMOVED AFTER ERECTION.
14. FOR EQUIPMENT LAYOUT SEE DWG No.: CSA-801-PI-LY-0001.
15. WELDS: E49XX

LEGEND:

- WORK POINT
- PS-XXX PIPE SUPPORT NO.
- GRATING SPAN
- GRATING OPENING
- MC MOMENT CONNECTION
- PILE LOCATIONS

TYPE: FL-1	TYPE: FL-2
WPS-FC1	WPS-FC1
WPS-SM1	WPS-SM1
	E-671N

UPDATED: Friday, December 20, 2019 5:00:01 PM BY: Jzulinski
PRINTED: Monday, December 23, 2019 2:31:59 PM DWG NAME: P:\CSA\Design Drafting\Structure\ST-DR\CSA-801-ST-DR-0001-01-02 Rev0 Piperack PR-801 Plan Views.dwg

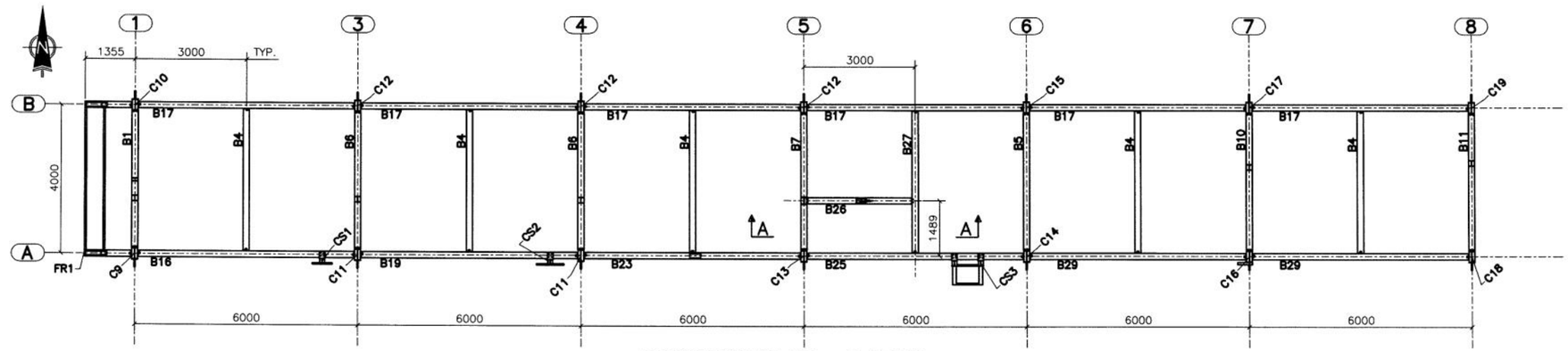

PIPERACK MODULE 801 – PLAN VIEW
T.O.STEEL EL.=5.400m U.N.O.

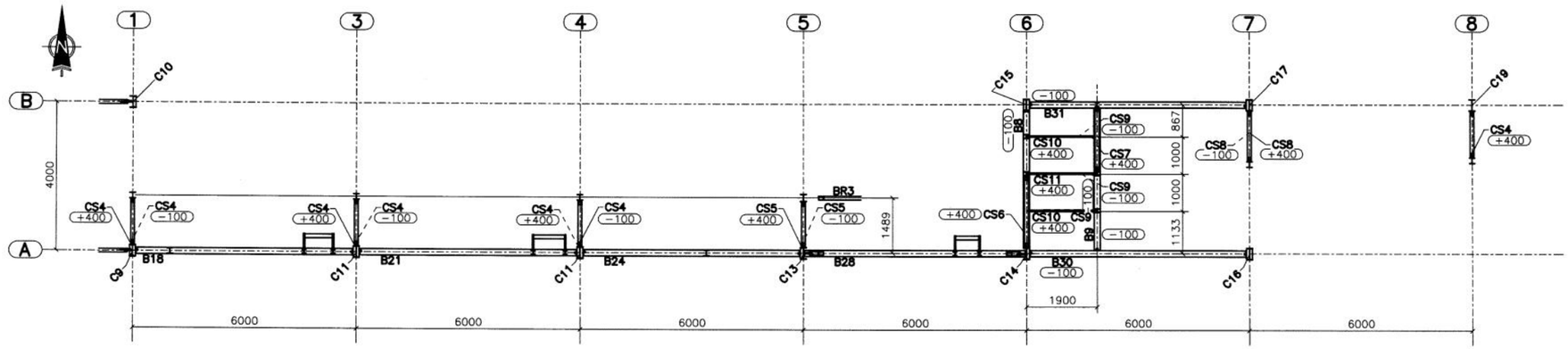

PIPERACK MODULE 801 – PLAN VIEW
T.O.STEEL EL.=6.250m U.N.O.

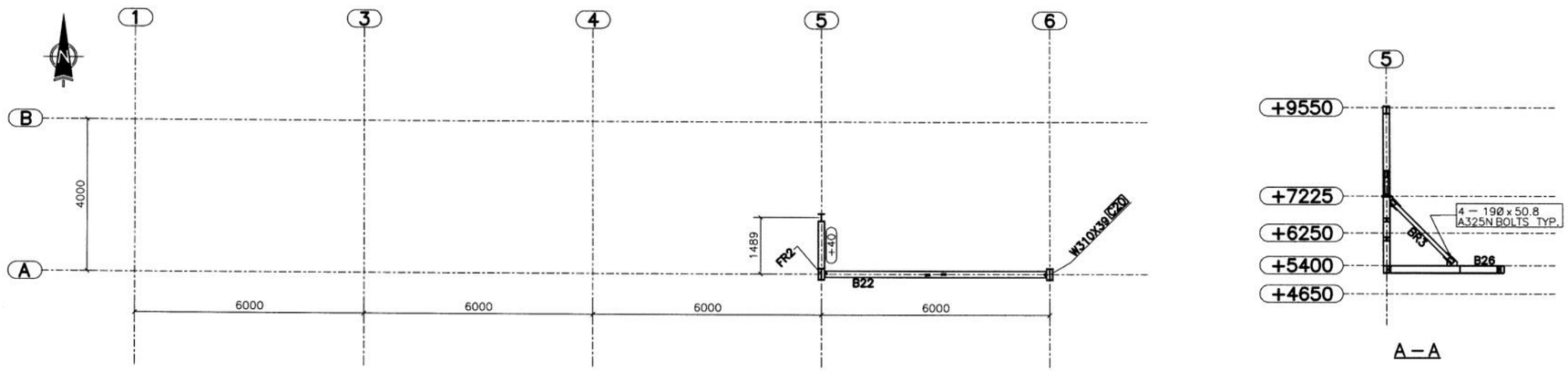

PIPERACK MODULE 801 – PLAN VIEW
T.O.STEEL EL.=9.550m U.N.O.

A–A

NOTES:

1. SURFACE PREPARATION AND PAINTING:
   DOC NO. TDE–EN–STD–7001 REV.4
   PAINT SYSTEM U–0
   SANDBLAST PER SSPC–SP6;
   PRIMER: N/A
   FINISH: 835 SERIES, 3–5 DFT MILS
   FINISH COLOR:
   – SKID, PLATFORMS, STRUCTURAL SUPPORTS & BOLTINGS ARE STANDARD GREY, RAL 7038
   – LADDERS/CAGES & HANDRAILS ARE SAFETY YELLOW, RAL 1021
2. THE SKID SHALL BE ADEQUATELY SUPPORTED BY PILE FOUNDATIONS DESIGNED BY OTHERS. THE QUANTITY AND LOCATION OF PILES MUST CONSIDER ALL APPLICABLE LOAD COMBINATIONS SUCH THAT ALLOWABLE BEAM DEFLECTION OR STRESS LIMITS ARE NOT EXCEEDED.
3. ALL UNSPECIFIED WELDS TO BE TYPE FL–2 (6mm CONTINUOUS FILLET WELD UNO).
4. WELD GAP APPLIED TO MATERIAL LIST.
5. USE STANDARD WELDING PROCEDURES: WPS–FC1, WPS–SM1.
6. REMOVE ALL WELD SLAG.
7. NDE REQUIREMENTS: MPI FOR LUGS, 100% RT ON SPLICES.
8. REFERENCE TDE STANDARD DWGS AS REQUIRED: TDE–EN–STD–3002.
9. SHIPPING WEIGHT: 33000 kg.
10. SHIPPING LIMITS: N/A.
11. UNLESS OTHERWISE INDICATED, SIZE OF HOLES: Ø22 U/N.
12. MATERIAL NOTES: CSA G40.21M
13. TEMPORARY STEEL SHALL BE PAINTED ORANGE AND WILL BE REMOVED AFTER ERECTION.
14. FOR EQUIPMENT LAYOUT SEE DWG No.: CSA–801–PI–LY–0001.
15. WELDS: E49XX

LEGEND:

- WORK POINT
- (PS–XXX) PIPE SUPPORT NO.
- GRATING SPAN
- GRATING OPENING
- MC MOMENT CONNECTION
- PILE LOCATIONS

TYPE: FL–1	TYPE: FL–2
WPS–FC1	WPS–FC1
WPS–SM1	WPS–SM1
	E–671N

UPDATED: Friday, December 20, 2019 4:45:24 PM BY: Jzulinski
PRINTED: Friday, December 20, 2019 4:59:55 PM DWG NAME: P:\CSA\Design Drafting\Structural\ST-DR\CSA-801-ST-DR-0001-01-03 Rev0 Piperack PR-801 Plan Views.dwg

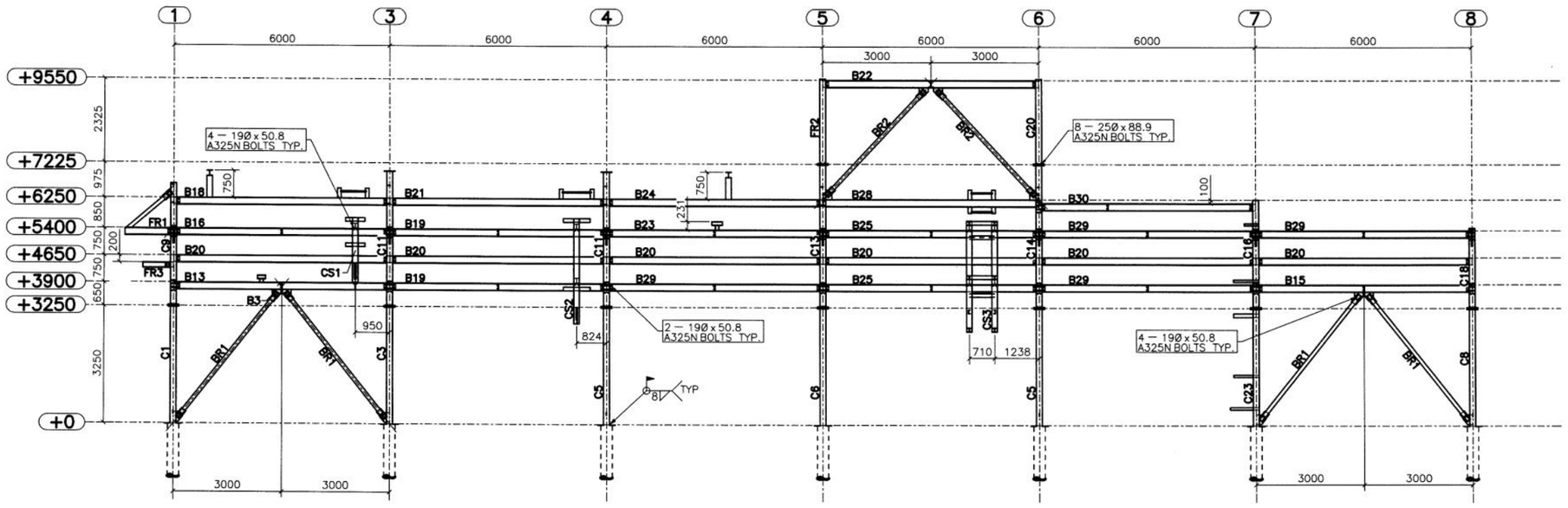

PIPERACK MODULE 801 – ELEVATION VIEW
LOOKING NORTH @ GRID LINE "A"

PIPERACK MODULE 801 – ELEVATION VIEW
LOOKING SOUTH @ GRID LINE "B"

NOTES:

1. SURFACE PREPARATION AND PAINTING:
   DOC NO. TDE-EN-STD-7001 REV.4
   PAINT SYSTEM U-0
   SANDBLAST PER SSPC-SP6;
   PRIMER: N/A
   FINISH: 835 SERIES, 3-5 DFT MILS
   FINISH COLOR:
   - SKID, PLATFORMS, STRUCTURAL SUPPORTS & BOLTINGS ARE STANDARD GREY, RAL 7038
   - LADDERS/CAGES & HANDRAILS ARE SAFETY YELLOW, RAL 1021
2. THE SKID SHALL BE ADEQUATELY SUPPORTED BY PILE FOUNDATIONS DESIGNED BY OTHERS. THE QUANTITY AND LOCATION OF PILES MUST CONSIDER ALL APPLICABLE LOAD COMBINATIONS SUCH THAT ALLOWABLE BEAM DEFLECTION OR STRESS LIMITS ARE NOT EXCEEDED.
3. ALL UNSPECIFIED WELDS TO BE TYPE FL-2 (6mm CONTINUOUS FILLET WELD UNO).
4. WELD GAP APPLIED TO MATERIAL LIST.
5. USE STANDARD WELDING PROCEDURES: WPS-FC1, WPS-SM1.
6. REMOVE ALL WELD SLAG.
7. NDE REQUIREMENTS: MPI FOR LUGS, 100% RT ON SPLICES.
8. REFERENCE TDE STANDARD DWGS AS REQUIRED: TDE-EN-STD-3002.
9. SHIPPING WEIGHT: 33000 kg.
10. SHIPPING LIMITS: N/A.
11. UNLESS OTHERWISE INDICATED, SIZE OF HOLES: Ø22 U/N.
12. MATERIAL NOTES: CSA G40.21M
13. TEMPORARY STEEL SHALL BE PAINTED ORANGE AND WILL BE REMOVED AFTER ERECTION.
14. FOR EQUIPMENT LAYOUT SEE DWG No.: CSA-801-PI-LY-0001.
15. WELDS: E49XX

LEGEND:

- WORK POINT
- PS-XXX — PIPE SUPPORT NO.
- GRATING SPAN
- GRATING OPENING
- MC — MOMENT CONNECTION
- PILE LOCATIONS

TYPE: FL-1	TYPE: FL-2
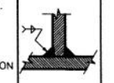	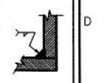
WPS-FC1	WPS-FC1
WPS-SM1	WPS-SM1
	E-671N

UPDATED: Friday, December 20, 2019 4:59:51 PM BY: Jzulinski
PRINTED: Monday, December 23, 2019 2:37:02 PM DWG NAME: P:\CSA\Design Drafting\Structural\ST-DR\CSA-801-ST-DR-0001-01-04 Rev0 Piperack PR-801 Elevation Views.dwg

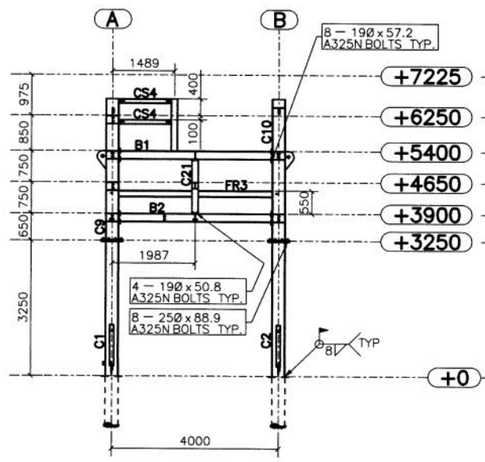

PIPERACK MODULE 801 – ELEVATION VIEW
LOOKING WEST @ GRID LINE "1"

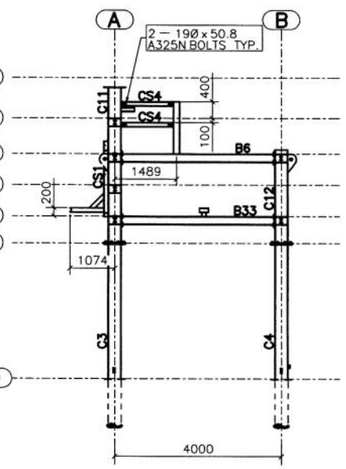

PIPERACK MODULE 801 – ELEVATION VIEW
LOOKING WEST @ GRID LINE "3"

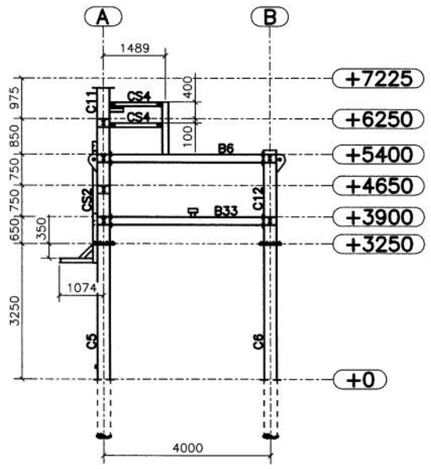

PIPERACK MODULE 801 – ELEVATION VIEW
LOOKING WEST @ GRID LINE "4"

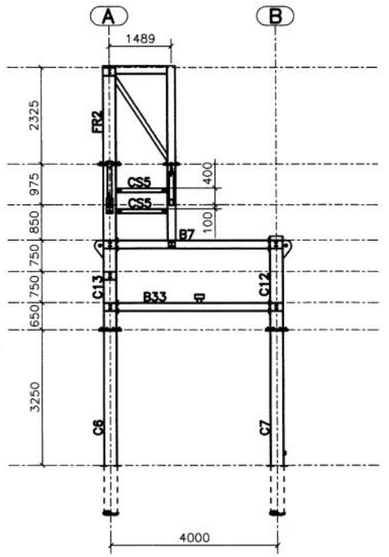

PIPERACK MODULE 801 – ELEVATION VIEW
LOOKING WEST @ GRID LINE "5"

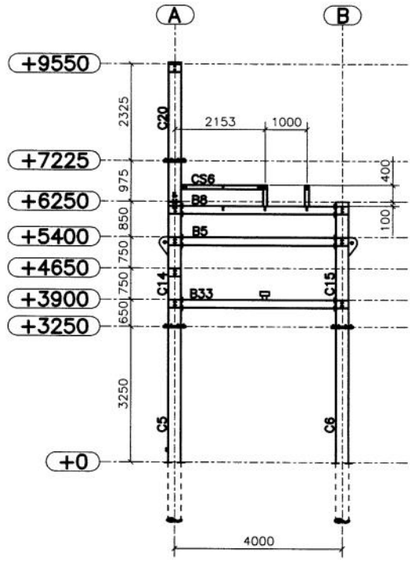

PIPERACK MODULE 801 – ELEVATION VIEW
LOOKING WEST @ GRID LINE "6"

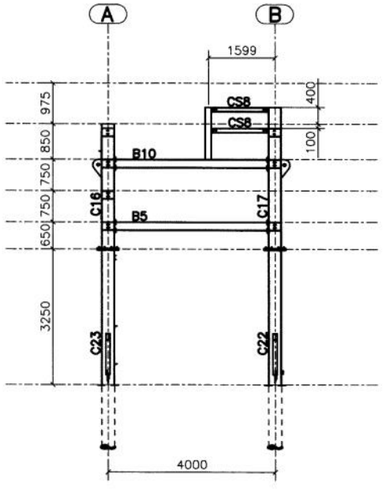

PIPERACK MODULE 801 – ELEVATION VIEW
LOOKING WEST @ GRID LINE "7"

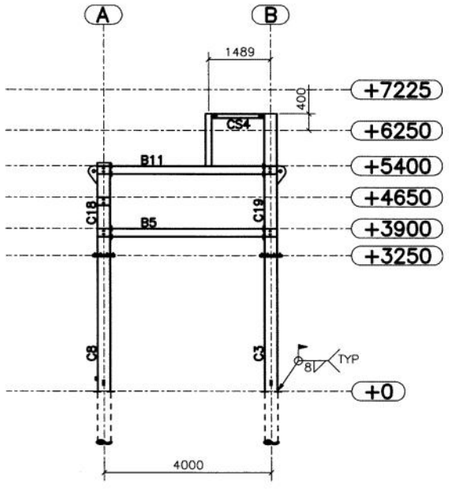

PIPERACK MODULE 801 – ELEVATION VIEW
LOOKING WEST @ GRID LINE "8"

NOTES:

1. SURFACE PREPARATION AND PAINTING:
   DOC NO. TDE-EN-STD-7001 REV.4
   PAINT SYSTEM U-0
   SANDBLAST PER SSPC-SP6;
   PRIMER: N/A
   FINISH: 835 SERIES, 3-5 DFT MILS
   FINISH COLOR:
   - SKID, PLATFORMS, STRUCTURAL SUPPORTS & BOLTINGS ARE STANDARD GREY, RAL 7038
   - LADDERS/CAGES & HANDRAILS ARE SAFETY YELLOW, RAL 1021
2. THE SKID SHALL BE ADEQUATELY SUPPORTED BY PILE FOUNDATIONS DESIGNED BY OTHERS. THE QUANTITY AND LOCATION OF PILES MUST CONSIDER ALL APPLICABLE LOAD COMBINATIONS SUCH THAT ALLOWABLE BEAM DEFLECTION OR STRESS LIMITS ARE NOT EXCEEDED.
3. ALL UNSPECIFIED WELDS TO BE TYPE FL-2 (6mm CONTINUOUS FILLET WELD UNO).
4. WELD GAP APPLIED TO MATERIAL LIST.
5. USE STANDARD WELDING PROCEDURES: WPS-FC1, WPS-SM1.
6. REMOVE ALL WELD SLAG.
7. NDE REQUIREMENTS: MPI FOR LUGS, 100% RT ON SPLICES.
8. REFERENCE TDE STANDARD DWGS AS REQUIRED: TDE-EN-STD-3002.
9. SHIPPING WEIGHT: 33000 kg.
10. SHIPPING LIMITS: N/A.
11. UNLESS OTHERWISE INDICATED, SIZE OF HOLES: Ø22 U/N.
12. MATERIAL NOTES: CSA G40.21M
13. TEMPORARY STEEL SHALL BE PAINTED ORANGE AND WILL BE REMOVED AFTER ERECTION.
14. FOR EQUIPMENT LAYOUT SEE DWG No.: CSA-801-PI-LY-0001.
15. WELDS: E49XX

LEGEND:

- WORK POINT
- (PS-XXX) PIPE SUPPORT NO.
- GRATING SPAN
- GRATING OPENING
- MC MOMENT CONNECTION
- PILE LOCATIONS

TYPE: FL-1	TYPE: FL-2
WPS-FC1	WPS-FC1
WPS-SM1	WPS-SM1

[redacted]

UPDATED: Friday, December 20, 2019 4:59:44 PM BY: JJulinski

PRINTED: Monday, December 23, 2019 2:39:57 PM DWG NAME: P:\CSA\Design Drafting\Structural\ST-DR\CSA-801-ST-DR-0001-01-05 RevO Piperack PIR-801 Elevation Views.dwg

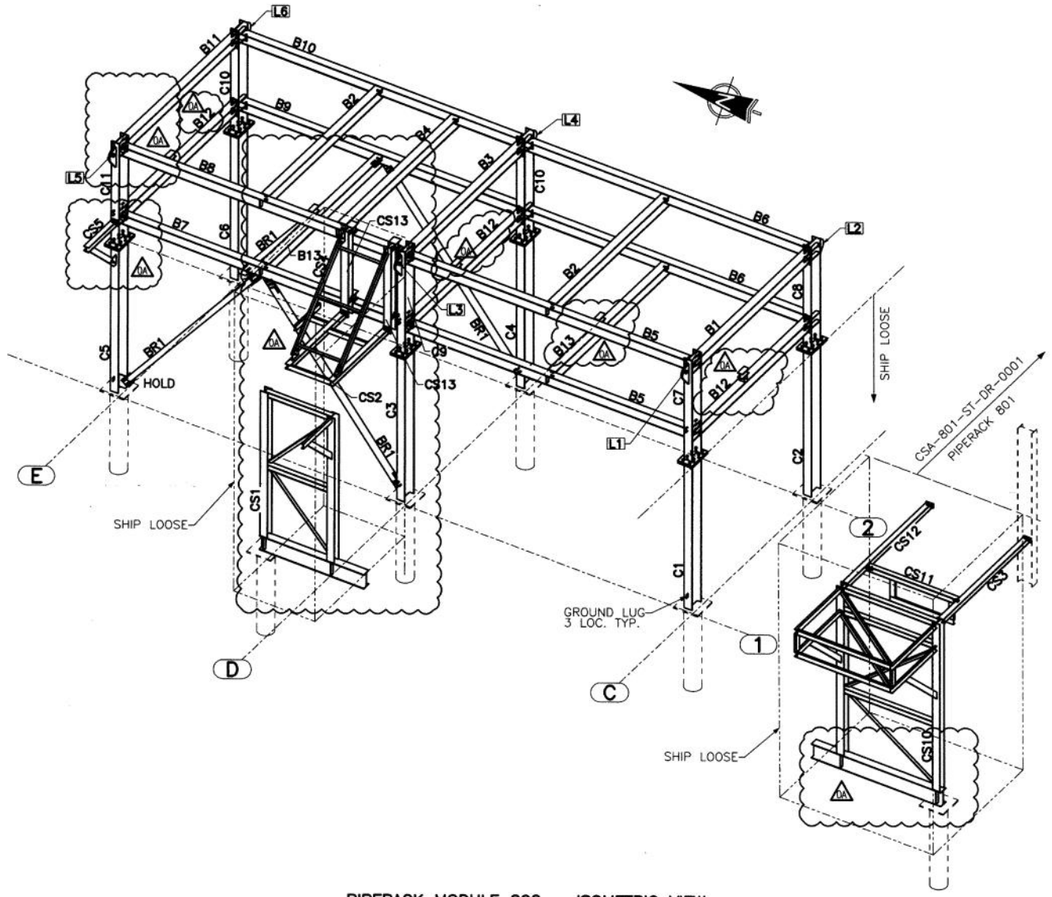

PIPERACK MODULE 802 – ISOMETRIC VIEW
(LOOKING FROM SOUTHWEST)

[redacted]

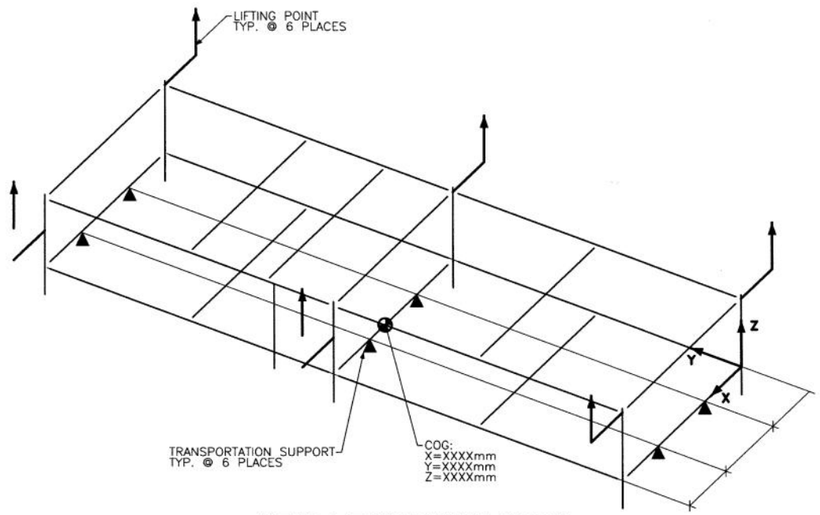

LIFTING & TRANSPORTATION DIAGRAM
(LOOKING FROM SOUTHWEST)

NOTES:

1. SURFACE PREPARATION AND PAINTING:
   DOC NO. TDE-EN-STD-7001 REV.4
   PAINT SYSTEM U-0
   SANDBLAST PER SSPC-SP6;
   PRIMER: N/A
   FINISH: 835 SERIES, 3-5 DFT MILS
   FINISH COLOR:
   - SKID, PLATFORMS, STRUCTURAL SUPPORTS & BOLTINGS ARE STANDARD GREY, RAL 7038
   - LADDERS/CAGES & HANDRAILS ARE SAFETY YELLOW, RAL 1021
2. THE SKID SHALL BE ADEQUATELY SUPPORTED BY PILE FOUNDATIONS DESIGNED BY OTHERS. THE QUANTITY AND LOCATION OF PILES MUST CONSIDER ALL APPLICABLE LOAD COMBINATIONS SUCH THAT ALLOWABLE BEAM DEFLECTION OR STRESS LIMITS ARE NOT EXCEEDED.
3. ALL UNSPECIFIED WELDS TO BE TYPE FL-2 (6mm CONTINUOUS FILLET WELD UNO).
4. WELD GAP APPLIED TO MATERIAL LIST.
5. USE STANDARD WELDING PROCEDURES: WPS-FC1, WPS-SM1.
6. REMOVE ALL WELD SLAG.
7. NDE REQUIREMENTS: MPI FOR LUGS, 100% RT ON SPLICES.
8. REFERENCE TDE STANDARD DWGS AS REQUIRED: TDE-EN-STD-3002.
9. SHIPPING WEIGHT: 9700 kg.
10. SHIPPING LIMITS: N/A.
11. UNLESS OTHERWISE INDICATED, SIZE OF HOLES: Ø22 U/N.
12. MATERIAL NOTES: CSA G40.21M
13. TEMPORARY STEEL SHALL BE PAINTED ORANGE AND WILL BE REMOVED AFTER ERECTION.
14. FOR EQUIPMENT LAYOUT SEE DWG No.: XXX-XXX-PI-LY-0001.
15. WELDS: E49XX

LEGEND:

- WORK POINT
- (PS-XXX) PIPE SUPPORT NO.
- GRATING SPAN
- GRATING OPENING
- MC MOMENT CONNECTION
- PILE LOCATIONS

TYPE: FL-1	TYPE: FL-2
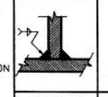	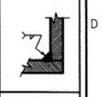
WPS-FC1	WPS-FC1
WPS-SM1	WPS-SM1
	E-671N

ITEM	SKID WEIGHT [kg] DURING SHIPPING:
STRUCTURAL STEEL	4500
SHIP LOOSE STEEL	1900
PIPING	4900
CABLE TRAY	300
TOTAL	9700

LIFTING LUG	SHIPPING LOAD [kgf]	LIFTING LUG TYPE
L1	1600	19-HL4
L2	1000	19-HL4
L3	2700	19-HL4
L4	1700	19-HL4
L5	1900	19-HL4
L6	1100	19-HL4

[redacted]

PRINTED: Saturday, February 22, 2020 1:52:36 PM DWG NAME: P:\CSA\Design Drafting\Structural\ST-DR\CSA-802-ST-DR-0001-01-01 RevOC Piperack PR-802 Isometric View.dwg
UPDATED: Saturday, February 22, 2020 1:45:27 PM BY: jzufinski

UPDATED: Thursday, January 02, 2020 1:17:58 PM BY: Jzulinski
PRINTED: Saturday, February 22, 2020 2:01:57 PM DWG NAME: P:\CSA\Design Drafting\Structural\ST-DR\CSA-802-ST-DR-0001-01-02 Rev04 Piperack PR-802 Plan Views.dwg

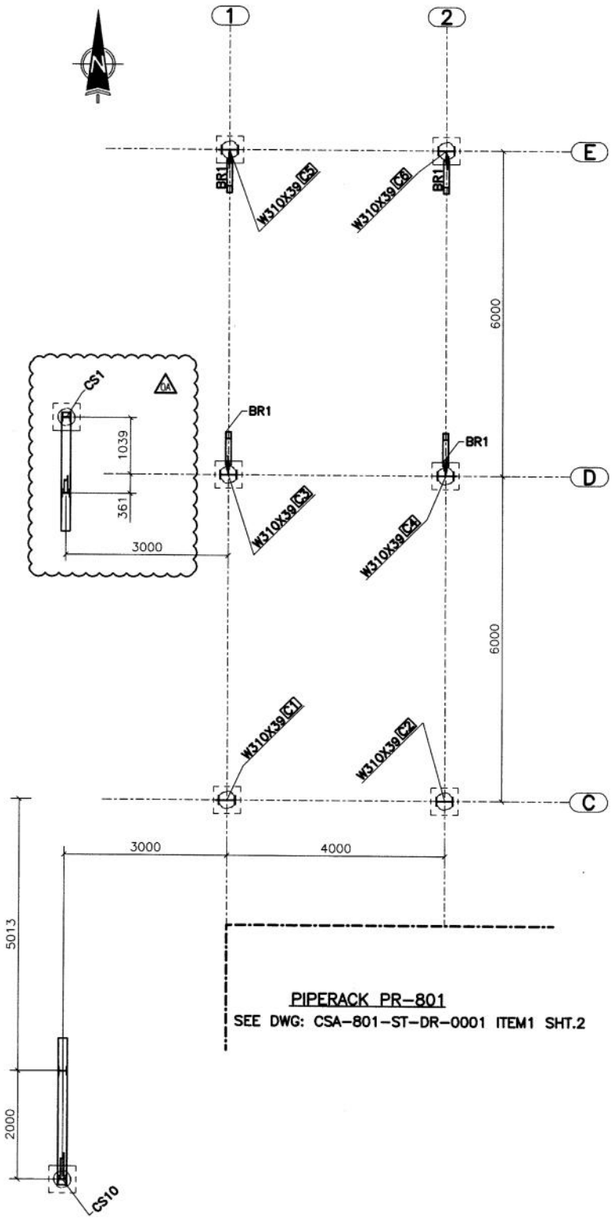

PIPERACK PR-801
SEE DWG: CSA-801-ST-DR-0001 ITEM1 SHT.2

PIPERACK MODULE 802 -PLAN VIEW
T.O.PILE EL.=0.000m

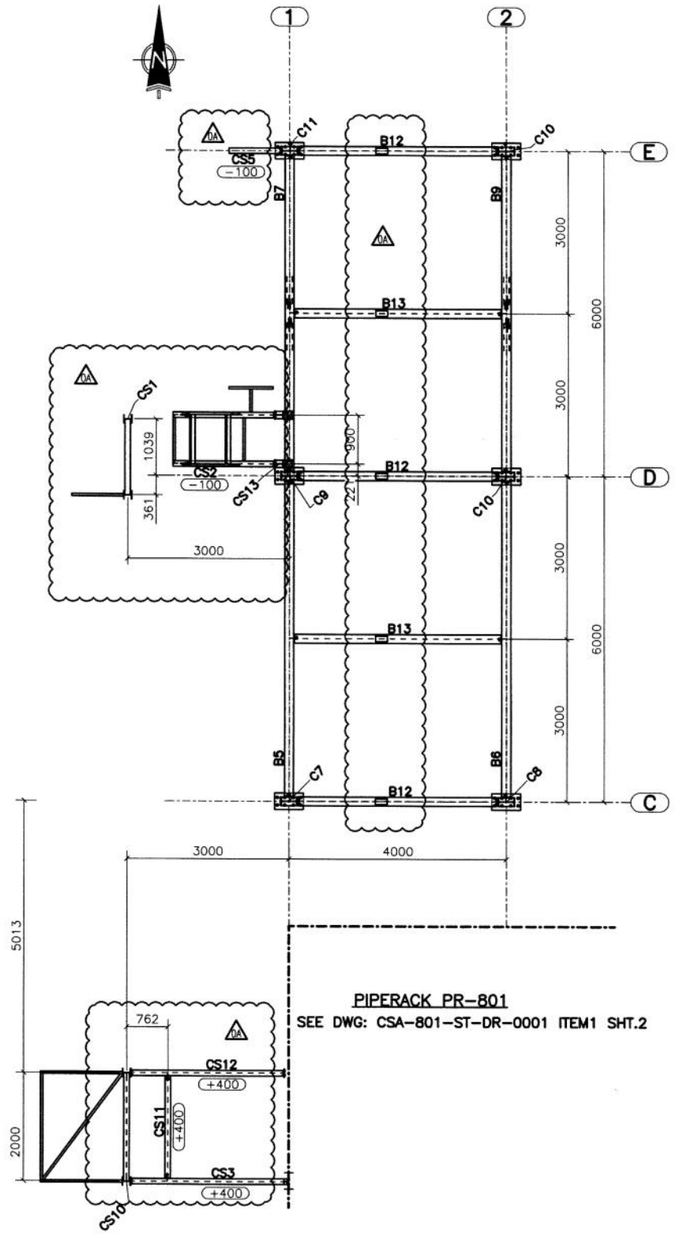

PIPERACK PR-801
SEE DWG: CSA-801-ST-DR-0001 ITEM1 SHT.2

PIPERACK MODULE 802 -PLAN VIEW
T.O.STEEL EL.=3.900m U.N.O

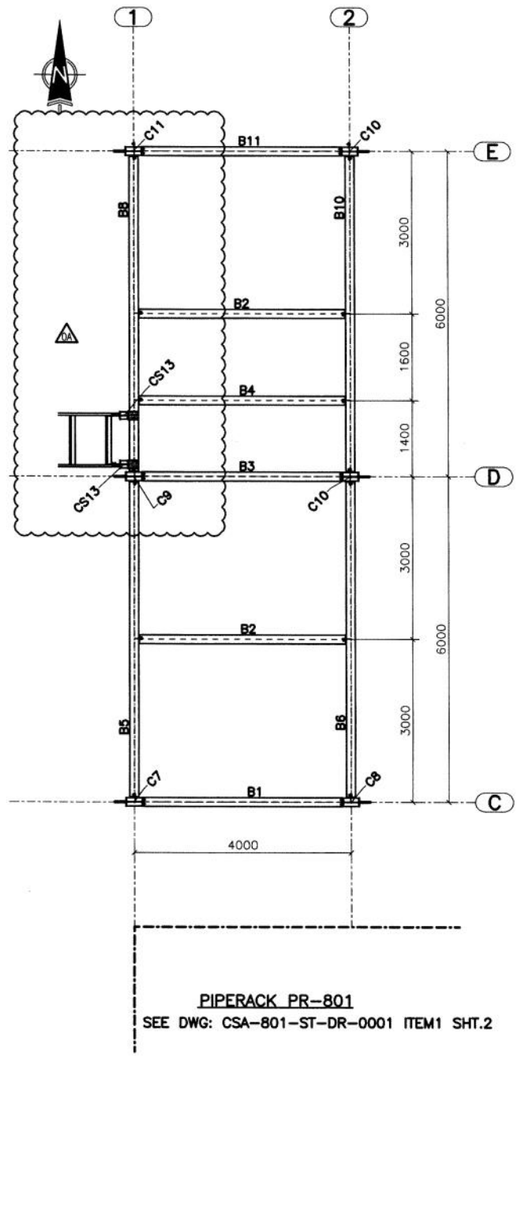

PIPERACK PR-801
SEE DWG: CSA-801-ST-DR-0001 ITEM1 SHT.2

PIPERACK MODULE 802 -PLAN VIEW
T.O.STEEL EL.=5.400m U.N.O

NOTES:

1. SURFACE PREPARATION AND PAINTING:
   DOC NO. TDE-EN-STD-7001 REV.4
   PAINT SYSTEM U-0
   SANDBLAST PER SSPC-SP6;
   PRIMER: N/A
   FINISH: 835 SERIES, 3-5 DFT MILS
   FINISH COLOR:
   - SKID, PLATFORMS, STRUCTURAL SUPPORTS & BOLTINGS ARE STANDARD GREY, RAL 7038
   - LADDERS/CAGES & HANDRAILS ARE SAFETY YELLOW, RAL 1021
2. THE SKID SHALL BE ADEQUATELY SUPPORTED BY PILE FOUNDATIONS DESIGNED BY OTHERS. THE QUANTITY AND LOCATION OF PILES MUST CONSIDER ALL APPLICABLE LOAD COMBINATIONS SUCH THAT ALLOWABLE BEAM DEFLECTION OR STRESS LIMITS ARE NOT EXCEEDED.
3. ALL UNSPECIFIED WELDS TO BE TYPE FL-2 (6mm CONTINUOUS FILLET WELD UNO).
4. WELD GAP APPLIED TO MATERIAL LIST.
5. USE STANDARD WELDING PROCEDURES: WPS-FC1, WPS-SM1.
6. REMOVE ALL WELD SLAG.
7. NDE REQUIREMENTS: MPI FOR LUGS, 100% RT ON SPLICES.
8. REFERENCE TDE STANDARD DWGS AS REQUIRED: TDE-EN-STD-3002.
9. SHIPPING WEIGHT: 9700 kg.
10. SHIPPING LIMITS: N/A.
11. UNLESS OTHERWISE INDICATED, SIZE OF HOLES: Ø22 U/N.
12. MATERIAL NOTES: CSA G40.21M
13. TEMPORARY STEEL SHALL BE PAINTED ORANGE AND WILL BE REMOVED AFTER ERECTION.
14. FOR EQUIPMENT LAYOUT SEE DWG No.: XXX-XXX-PI-LY-0001.
15. WELDS: E49XX

LEGEND:

- WORK POINT
- (PS-XXX) PIPE SUPPORT NO.
- GRATING SPAN
- GRATING OPENING
- MC MOMENT CONNECTION
- PILE LOCATIONS

TYPE: FL-1	TYPE: FL-2
WPS-FC1	WPS-FC1
WPS-SM1	WPS-SM1
	E-671N

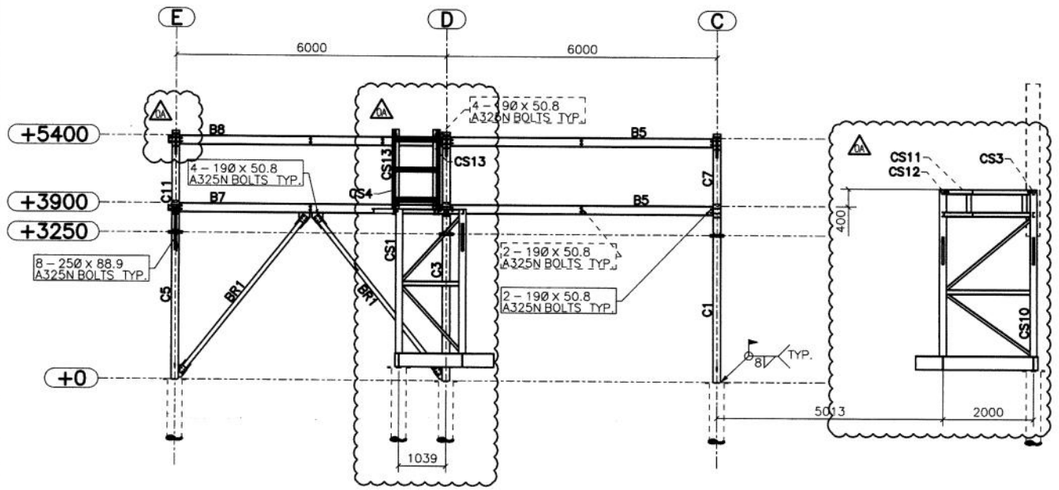

PIPERACK MODULE 802 @ GRID LINE "1"
(LOOKING EAST)

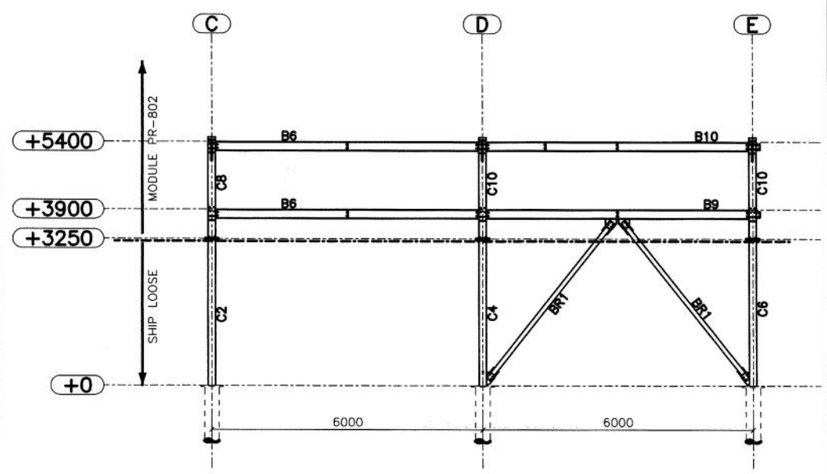

PIPERACK MODULE 802 @ GRID LINE "2"
(LOOKING WEST)

NOTES:

1. SURFACE PREPARATION AND PAINTING:
   DOC NO. TDE-EN-STD-7001 REV.4
   PAINT SYSTEM U-0
   SANDBLAST PER SSPC-SP6;
   PRIMER: N/A
   FINISH: 835 SERIES, 3-5 DFT MILS
   FINISH COLOR:
   - SKID, PLATFORMS, STRUCTURAL SUPPORTS & BOLTINGS ARE STANDARD GREY, RAL 7038
   - LADDERS/CAGES & HANDRAILS ARE SAFETY YELLOW, RAL 1021
2. THE SKID SHALL BE ADEQUATELY SUPPORTED BY PILE FOUNDATIONS DESIGNED BY OTHERS. THE QUANTITY AND LOCATION OF PILES MUST CONSIDER ALL APPLICABLE LOAD COMBINATIONS SUCH THAT ALLOWABLE BEAM DEFLECTION OR STRESS LIMITS ARE NOT EXCEEDED.
3. ALL UNSPECIFIED WELDS TO BE TYPE FL-2 (6mm CONTINUOUS FILLET WELD UNO).
4. WELD GAP APPLIED TO MATERIAL LIST.
5. USE STANDARD WELDING PROCEDURES: WPS-FC1, WPS-SM1.
6. REMOVE ALL WELD SLAG.
7. NDE REQUIREMENTS: MPI FOR LUGS, 100% RT ON SPLICES.
8. REFERENCE TDE STANDARD DWGS AS REQUIRED: TDE-EN-STD-3002.
9. SHIPPING WEIGHT: 9700 kg.
10. SHIPPING LIMITS: N/A.
11. UNLESS OTHERWISE INDICATED, SIZE OF HOLES: Ø22 U/N.
12. MATERIAL NOTES: CSA G40.21M
13. TEMPORARY STEEL SHALL BE PAINTED ORANGE AND WILL BE REMOVED AFTER ERECTION.
14. FOR EQUIPMENT LAYOUT SEE DWG No.: XXX-XXX-PI-LY-0001.
15. WELDS: E49XX

LEGEND:

- WORK POINT
- PS-XXX — PIPE SUPPORT NO.
- GRATING SPAN
- GRATING OPENING
- MC — MOMENT CONNECTION
- PILE LOCATIONS

TYPE: FL-1	TYPE: FL-2
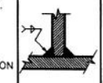	
WPS-FC1	WPS-FC1
WPS-SM1	WPS-SM1
	E-671N

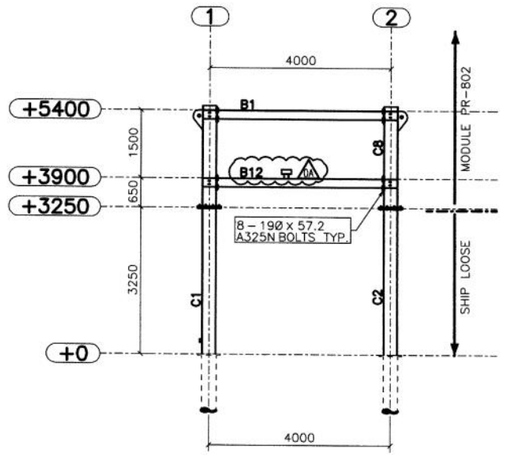

PIPERACK MODULE 802 @ GRID LINE "C"
(LOOKING NORTH)

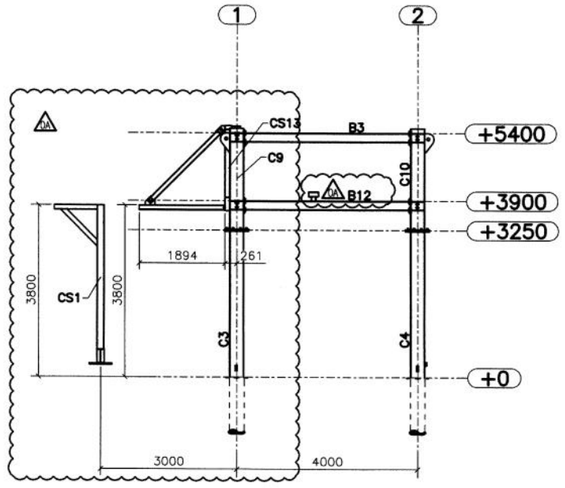

PIPERACK MODULE 802 @ GRID LINE "D"
(LOOKING NORTH)

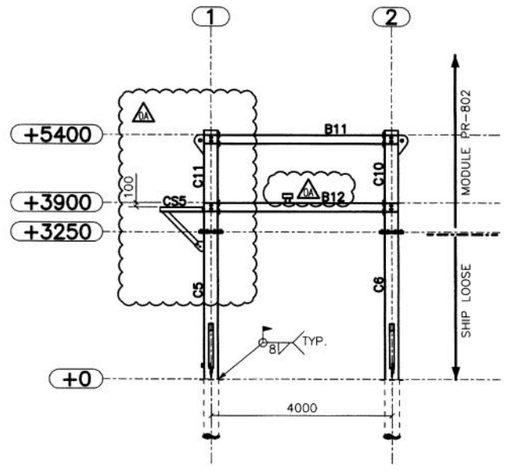

PIPERACK MODULE 802 @ GRID LINE "E"
(LOOKING NORTH)

[redacted]

UPDATED: Thursday, January 02, 2020 1:24:23 PM BY: JJulinski
PRINTED: Saturday, February 22, 2020 2:09:12 PM DWG NAME: P:\CSA\Design Drafting\Structural\ST-DR\CSA-802-ST-DR-0001-01-03 RevOA Piperack PR-802 Elevation Views.dwg

UPDATED: March 31, 2020 20:59:04 BY: JzulfiqarPRINTED: April 1, 2020 11:22:29 DWG NAME: P:\CSA\Design Drafting\Structural\ST-DR\CSA-803-ST-DR-0001-01-01 Rev0 Piperack PR-803 Isometric View.dwg

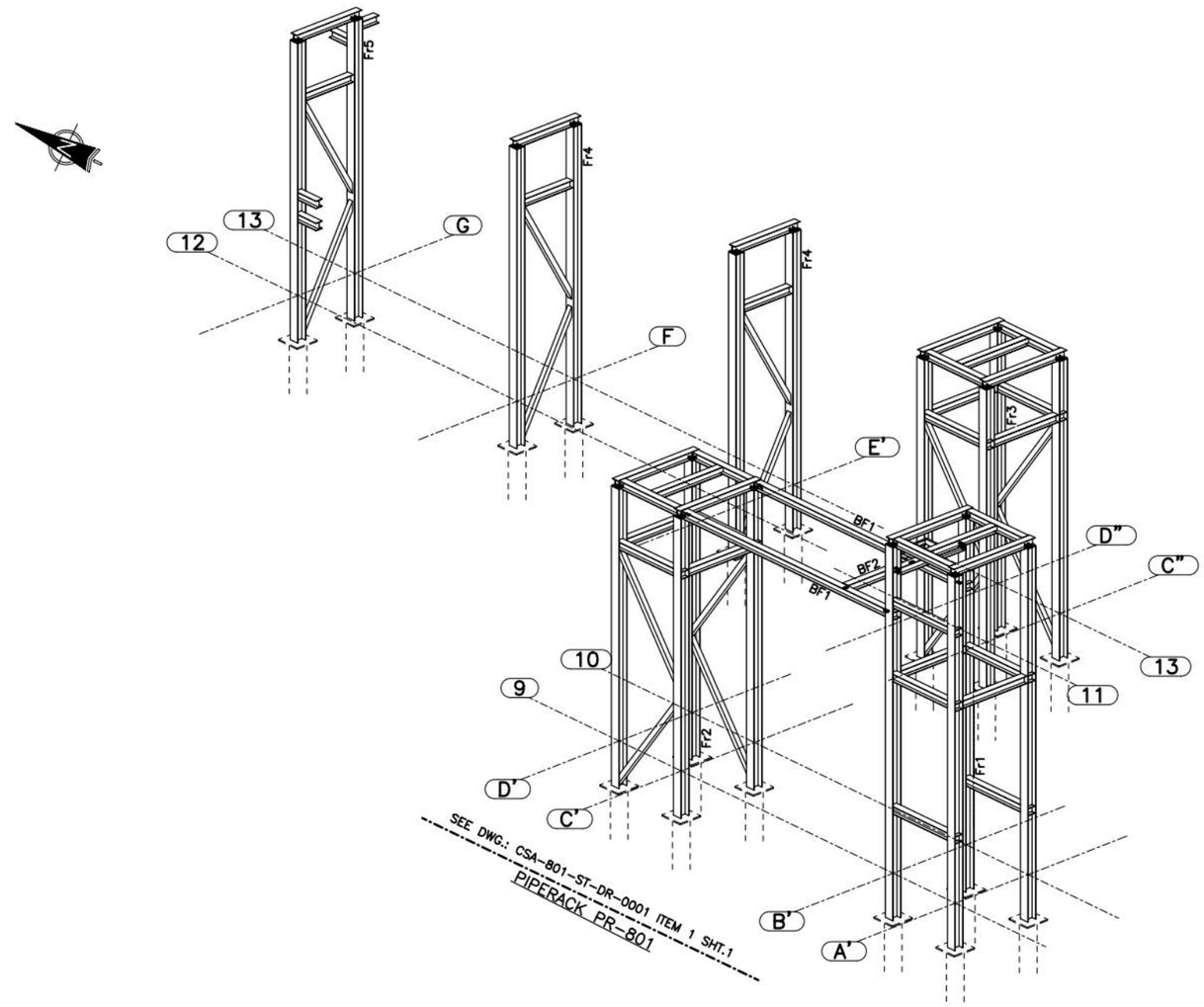

PIPERACK MODULE 803 – ISOMETRIC VIEW
(LOOKING FROM SOUTHWEST)

NOTES:

1. SURFACE PREPARATION AND PAINTING:
   DOC NO. TDE-EN-STD-7001 REV.4
   PAINT SYSTEM U-O
   SANDBLAST PER SSPC-SP6;
   PRIMER: N/A
   FINISH: 835 SERIES, 3-5 DFT MILS
   FINISH COLOR:
   - SKID, PLATFORMS, STRUCTURAL SUPPORTS & BOLTINGS ARE STANDARD GREY, RAL 7038
   - LADDERS/CAGES & HANDRAILS ARE SAFETY YELLOW, RAL 1021
2. THE SKID SHALL BE ADEQUATELY SUPPORTED BY PILE FOUNDATIONS DESIGNED BY OTHERS. THE QUANTITY AND LOCATION OF PILES MUST CONSIDER ALL APPLICABLE LOAD COMBINATIONS SUCH THAT ALLOWABLE BEAM DEFLECTION OR STRESS LIMITS ARE NOT EXCEEDED.
3. ALL UNSPECIFIED WELDS TO BE TYPE FL-2 (6mm CONTINUOUS FILLET WELD UNO).
4. WELD GAP APPLIED TO MATERIAL LIST.
5. USE STANDARD WELDING PROCEDURES: WPS-FC1, WPS-SM1.
6. REMOVE ALL WELD SLAG.
7. NDE REQUIREMENTS: MPI FOR LUGS, 100% RT ON SPLICES.
8. REFERENCE TDE STANDARD DWGS AS REQUIRED: TDE-EN-STD-3002.
9. SHIPPING WEIGHT: 7800 kg.
10. SHIPPING LIMITS: N/A.
11. UNLESS OTHERWISE INDICATED, SIZE OF HOLES: Ø22 U/N
12. MATERIAL NOTES: CSA G40.21M
13. TEMPORARY STEEL SHALL BE PAINTED ORANGE AND WILL BE REMOVED AFTER ERECTION.
14. FOR EQUIPMENT LAYOUT SEE DWG No.: CSA-803-PI-LY-0001.
15. WELDS: E49XX

LEGEND:

- WORK POINT
- PS-XXX — PIPE SUPPORT NO.
- GRATING SPAN
- GRATING OPENING
- MC — MOMENT CONNECTION
- PILE LOCATIONS

TYPE: FL-1	TYPE: FL-2
WPS-FC1	WPS-FC1
WPS-SM1	WPS-SM1
	E-671N

UPDATED: April 1, 2020 10:23:08 BY: Detroyk
PRINTED: April 1, 2020 11:22:35 DWG NAME: P:\CSA\Design Drafting\Structural\ST-DFR\CSA-803-ST-DR-0001-01-02 Rev0 Piperack PR-803 Plan Views.dwg

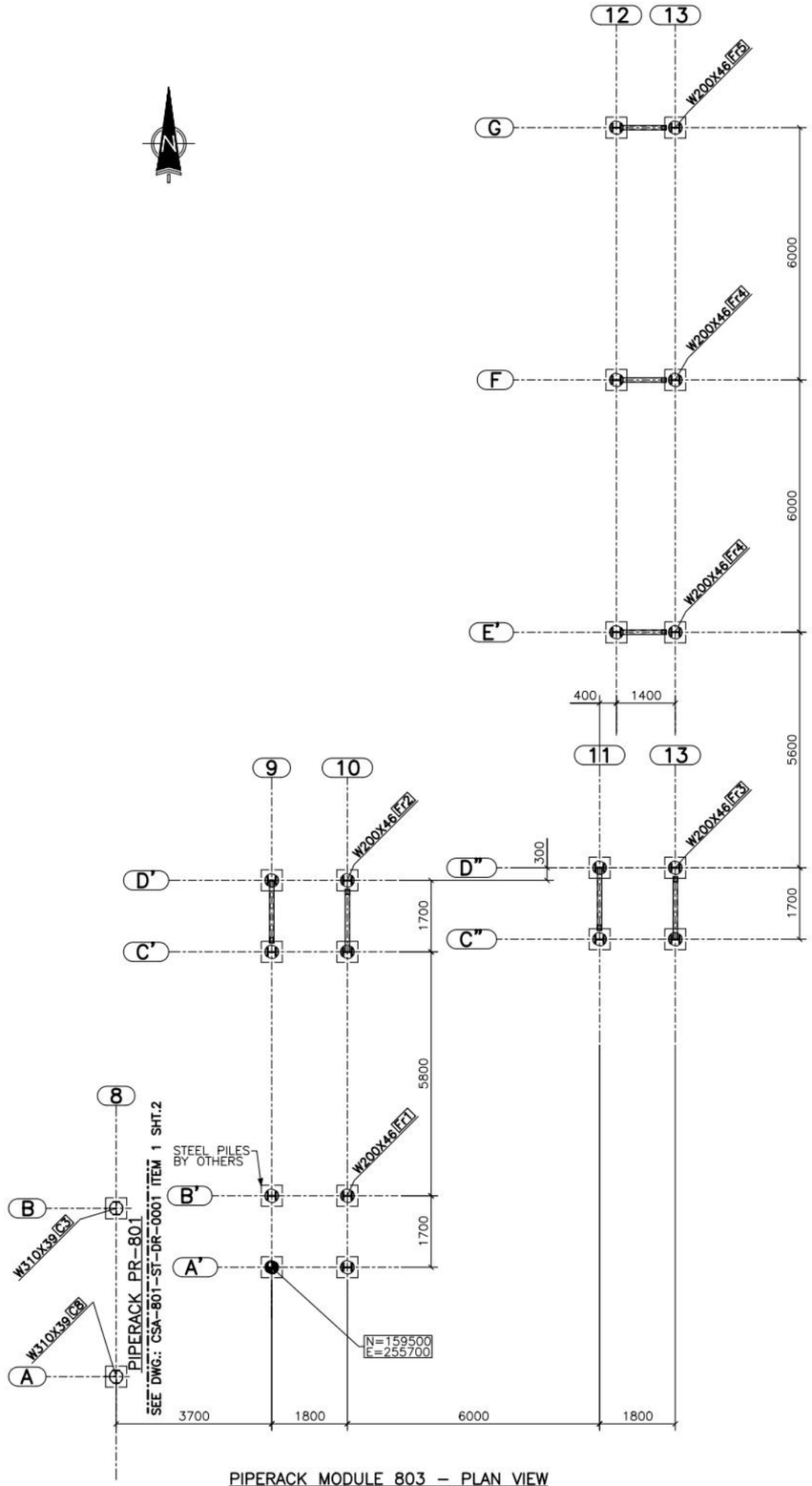

PIPERACK MODULE 803 – PLAN VIEW
T.O.PILE EL.=-1.100m

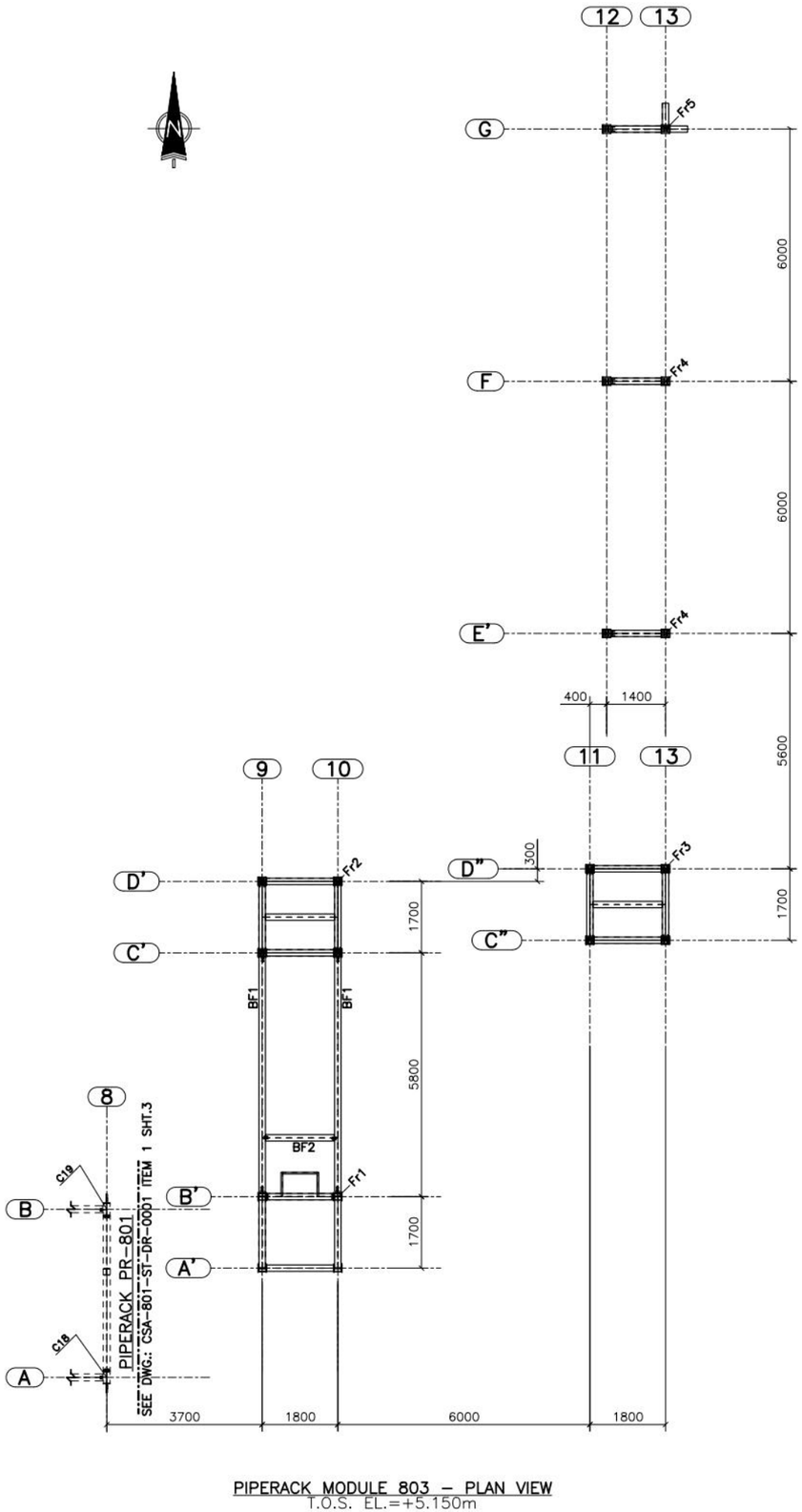

PIPERACK MODULE 803 – PLAN VIEW
T.O.S. EL.=+5.150m

NOTES:

1. SURFACE PREPARATION AND PAINTING:
   DOC NO. TDE-EN-STD-7001 REV.4
   PAINT SYSTEM U-0
   SANDBLAST PER SSPC-SP6;
   PRIMER: N/A
   FINISH: 835 SERIES, 3-5 DFT MILS
   FINISH COLOR:
   - SKID, PLATFORMS, STRUCTURAL SUPPORTS & BOLTINGS ARE STANDARD GREY, RAL 7038
   - LADDERS/CAGES & HANDRAILS ARE SAFETY YELLOW, RAL 1021
2. THE SKID SHALL BE ADEQUATELY SUPPORTED BY PILE FOUNDATIONS DESIGNED BY OTHERS. THE QUANTITY AND LOCATION OF PILES MUST CONSIDER ALL APPLICABLE LOAD COMBINATIONS SUCH THAT ALLOWABLE BEAM DEFLECTION OR STRESS LIMITS ARE NOT EXCEEDED.
3. ALL UNSPECIFIED WELDS TO BE TYPE FL-2 (6mm CONTINUOUS FILLET WELD UNO).
4. WELD GAP APPLIED TO MATERIAL LIST.
5. USE STANDARD WELDING PROCEDURES: WPS-FC1, WPS-SM1.
6. REMOVE ALL WELD SLAG.
7. NDE REQUIREMENTS: MPI FOR LUGS, 100% RT ON SPLICES.
8. REFERENCE TDE STANDARD DWGS AS REQUIRED: TDE-EN-STD-3002.
9. SHIPPING WEIGHT: 7800 kg.
10. SHIPPING LIMITS: N/A.
11. UNLESS OTHERWISE INDICATED, SIZE OF HOLES: Ø22 U/N.
12. MATERIAL NOTES: CSA G40.21M
13. TEMPORARY STEEL SHALL BE PAINTED ORANGE AND WILL BE REMOVED AFTER ERECTION.
14. FOR EQUIPMENT LAYOUT SEE DWG No.: CSA-803-PI-LY-0001.
15. WELDS: E49XX

LEGEND:

- WORK POINT
- PS-XXX — PIPE SUPPORT NO.
- GRATING SPAN
- GRATING OPENING
- MC — MOMENT CONNECTION
- PILE LOCATIONS

TYPE: FL-1	TYPE: FL-2
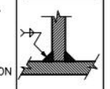	
WPS-FC1	WPS-FC1
WPS-SM1	WPS-SM1
	E-671N

UPDATED: March 31, 2020 21:02:54 BY: JzuFinal

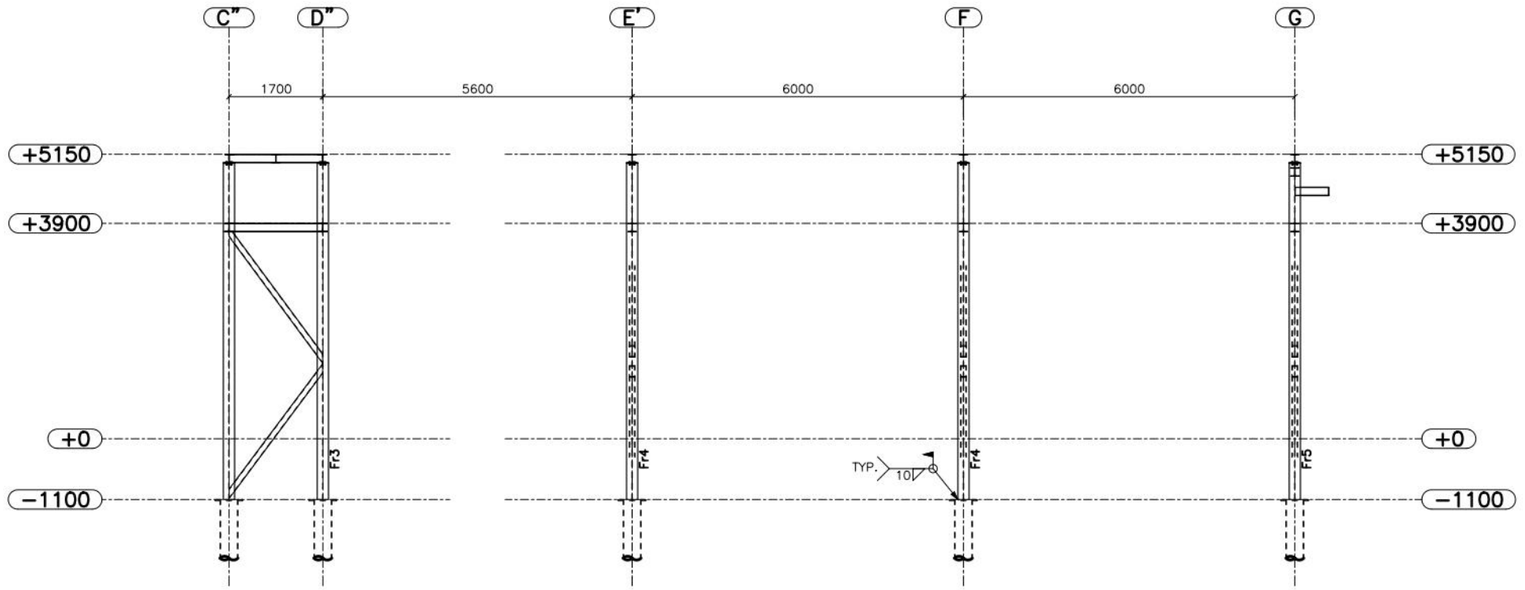

PIPERACK MODULE 803 – ELEVATION VIEW
(LOOKING WEST @ GRIDLINE "13")

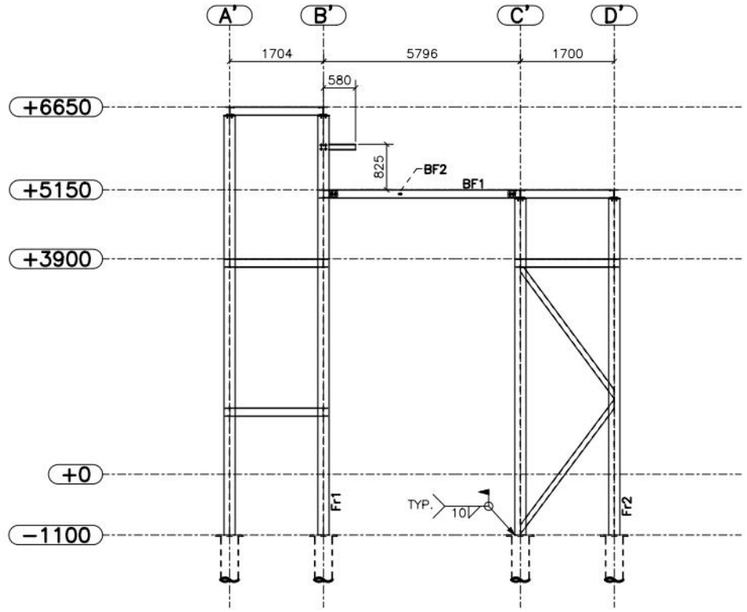

PIPERACK MODULE 803 – ELEVATION VIEW
(LOOKING WEST @ GRIDLINE "10")

NOTES:

1. SURFACE PREPARATION AND PAINTING:
   DOC NO. TDE–EN–STD–7001 REV.4
   PAINT SYSTEM U–0
   SANDBLAST PER SSPC–SP6;
   PRIMER: N/A
   FINISH: 835 SERIES, 3–5 DFT MILS
   FINISH COLOR:
   – SKID, PLATFORMS, STRUCTURAL SUPPORTS & BOLTINGS ARE STANDARD GREY, RAL 7038
   – LADDERS/CAGES & HANDRAILS ARE SAFETY YELLOW, RAL 1021
2. THE SKID SHALL BE ADEQUATELY SUPPORTED BY PILE FOUNDATIONS DESIGNED BY OTHERS. THE QUANTITY AND LOCATION OF PILES MUST CONSIDER ALL APPLICABLE LOAD COMBINATIONS SUCH THAT ALLOWABLE BEAM DEFLECTION OR STRESS LIMITS ARE NOT EXCEEDED.
3. ALL UNSPECIFIED WELDS TO BE TYPE FL–2 (6mm CONTINUOUS FILLET WELD UNO).
4. WELD GAP APPLIED TO MATERIAL LIST.
5. USE STANDARD WELDING PROCEDURES: WPS–FC1, WPS–SM1.
6. REMOVE ALL WELD SLAG.
7. NDE REQUIREMENTS: MPI FOR LUGS, 100% RT ON SPLICES.
8. REFERENCE TDE STANDARD DWGS AS REQUIRED: TDE–EN–STD–3002.
9. SHIPPING WEIGHT: 7800 kg.
10. SHIPPING LIMITS: N/A.
11. UNLESS OTHERWISE INDICATED, SIZE OF HOLES: Ø22 U/N
12. MATERIAL NOTES: CSA G40.21M
13. TEMPORARY STEEL SHALL BE PAINTED ORANGE AND WILL BE REMOVED AFTER ERECTION.
14. FOR EQUIPMENT LAYOUT SEE DWG No.: CSA–803–PI–LY–0001.
15. WELDS: E49XX

LEGEND:

- WORK POINT
- PS–XXX — PIPE SUPPORT NO.
- GRATING SPAN
- GRATING OPENING
- MC — MOMENT CONNECTION
- PILE LOCATIONS

TYPE: FL–1	TYPE: FL–2
WPS–FC1	WPS–FC1
WPS–SM1	WPS–SM1
	E–671N

PRINTED: April 1, 2020 11:22:40 DWG NAME: P:\CSA\Design Drafting\Structural\ST–DR\CSA–803–ST–DR–0001–01–03 Rev0 Piperack PR–803 Elevation Views.dwg

UPDATED: June 12, 2020 2:17:20 PM BY: Tdang
PRINTED: June 17, 2020 9:07:35 AM DWG NAME: P:\CSA\Design Drafting\Structural\ST-DR\CSA-803-ST-DR-0002-01-01 Rev0 Storage Tank T-0220 Steel - Isometric, Plan, Section Views.dwg

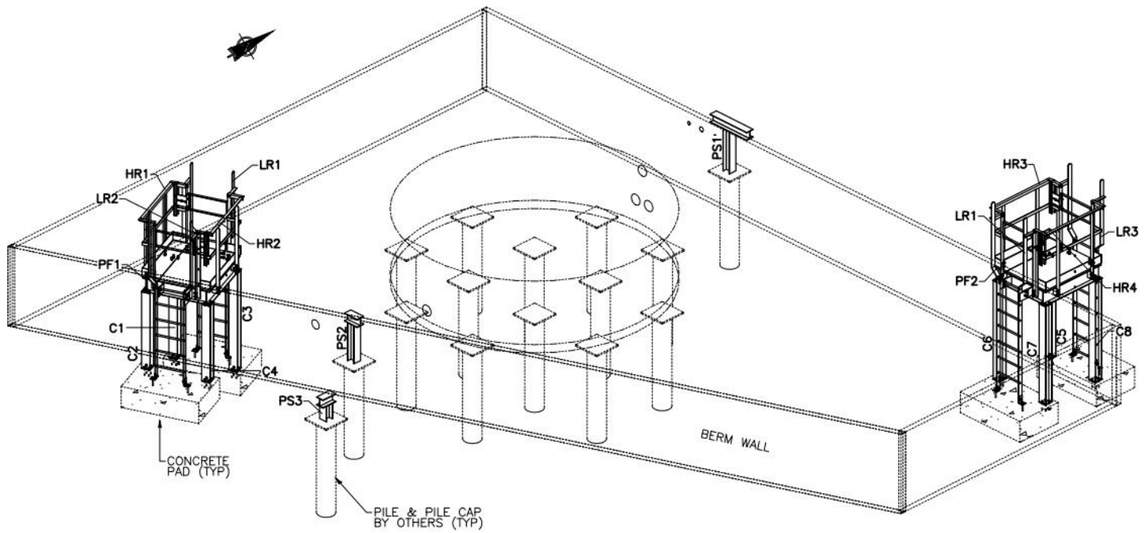

STORAGE TANK T-0220 AREA – ISOMETRIC VIEW
(LOOKING FROM SOUTHEAST)

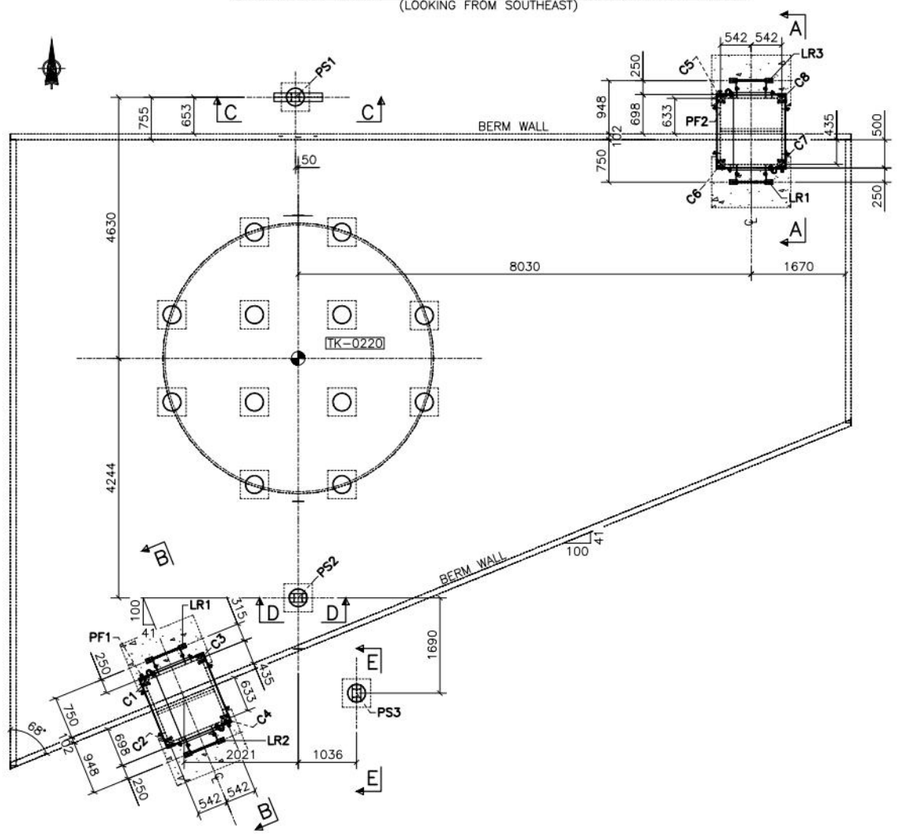

STORAGE TANK T-0220 AREA – PLAN VIEW

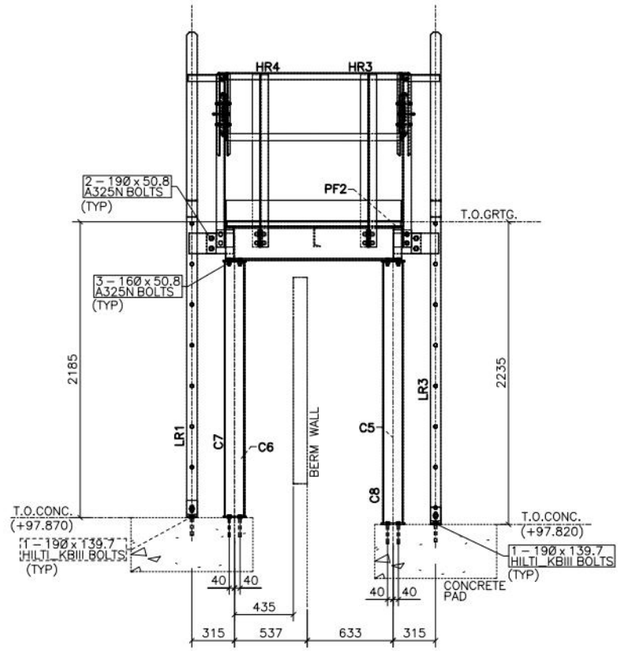

A – A

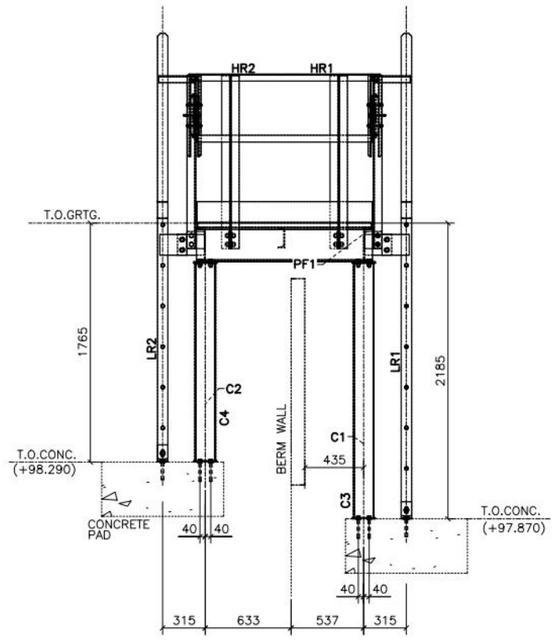

B – B

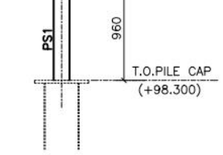

C – C

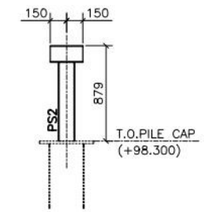

D – D

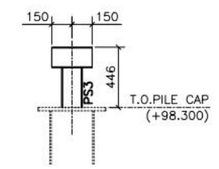

E – E

NOTES:

1. SURFACE PREPARATION AND PAINTING:
   DOC NO. TDE-EN-STD-7001 REV.4
   PAINT SYSTEM U-0
   SANDBLAST PER SSPC-SP6;
   PRIMER: N/A
   FINISH: 835 SERIES, 3-5 DFT MILS
   FINISH COLOR:
   - SKID, PLATFORMS, STRUCTURAL SUPPORTS & BOLTINGS ARE STANDARD GREY, RAL 7038
   - LADDERS/CAGES & HANDRAILS ARE SAFETY YELLOW, RAL 1021
2. THE SKID SHALL BE ADEQUATELY SUPPORTED BY PILE FOUNDATIONS DESIGNED BY OTHERS. THE QUANTITY AND LOCATION OF PILES MUST CONSIDER ALL APPLICABLE LOAD COMBINATIONS SUCH THAT ALLOWABLE BEAM DEFLECTION OR STRESS LIMITS ARE NOT EXCEEDED.
3. ALL UNSPECIFIED WELDS TO BE TYPE FL-2 (6mm CONTINUOUS FILLET WELD UNO).
4. WELD GAP APPLIED TO MATERIAL LIST.
5. USE STANDARD WELDING PROCEDURES: WPS-FC1, WPS-SM1.
6. REMOVE ALL WELD SLAG.
7. NDE REQUIREMENTS: MPI FOR LUGS, 100% RT ON SPLICES.
8. REFERENCE TDE STANDARD DWGS AS REQUIRED: TDE-EN-STD-3002.
9. SHIPPING WEIGHT: 1450 kg.
10. SHIPPING LIMITS: N/A.
11. UNLESS OTHERWISE INDICATED, SIZE OF HOLES: Ø22 U/N.
12. MATERIAL NOTES: CSA G40.21M
13. TEMPORARY STEEL SHALL BE PAINTED ORANGE AND WILL BE REMOVED AFTER ERECTION.
14. FOR EQUIPMENT LAYOUT SEE DWG No.: CSA-803-PI-LY-0002.
15. WELDS: E49XX

LEGEND:

- WORK POINT
- PS-XXX — PIPE SUPPORT NO.
- GRATING SPAN
- GRATING OPENING
- MC — MOMENT CONNECTION
- PILE LOCATIONS

TYPE: FL-1	TYPE: FL-2
WPS-FC1	WPS-FC1
WPS-SM1	WPS-SM1
	E-671N

E-0220
FEED/KEROSENE EXCHANGER
DUTY: 155 kW

E-0225 A/B
FEED/RESIDUE EXCHANGER
DUTY: 238 kW

E-0230
FEED/DIESEL EXCHANGER
DUTY: 136 kW

T-0201
PREFRACTIONATOR
SIZE: 914/1372 mm ID x 19,511 mm S/S
(RE-PURPOSED FROM PLANT1 STABILIZER)

V-0202
PREFRACTIONATOR REFLUX DRUM
SIZE: 914 mm ID x 3048 mm S/S
(RE-PURPOSED FROM PLANT 1 STABILIZER REFLUX DRUM)

H-0201A
PREFRACTIONATOR REBOILER
DUTY: 4450 MJ/hr
(RE-PURPOSED FROM PLANT1 STABILIZER REBOILER)

AC-0202
PREFRACTIONATOR CONDENSER
DUTY: 1950 MJ/hr
(RE-PURPOSED FROM PLANT 1 STABILIZER OVERHEAD CONDENSER)

P-0202A/B
PREFRACTIONATOR REFLUX PUMP
CAPACITY: 9.8 m3/h @ 40 m TDH
RE-PURPOSED FROM PLANT 1 STABILIZER REFLUX PUMPS)

P-0201A/B
PREFRACTIONATOR REBOILER CIRC. PUMP
CAPACITY: 98 m3/h @ 68 m TDH
(RE-PURPOSED FROM PLANT 1 STABILIZER REBOILER PUMPS)

GENERAL NOTES:
1. REPURPOSED EXISITING EQUIPMENT AT BRC PLANT 1 STABILIZER.
2. CONTROLLERS IN EXISTING REFLUX SYSTEM MUST BE REPROGRAMMED TO ACCOMMODATE CONTROL SCHEME DEPICTED HERE.
3. PROCESS DATA IS TAKEN FROM THE SUMMER OPERATING CASE.

HOLDS:

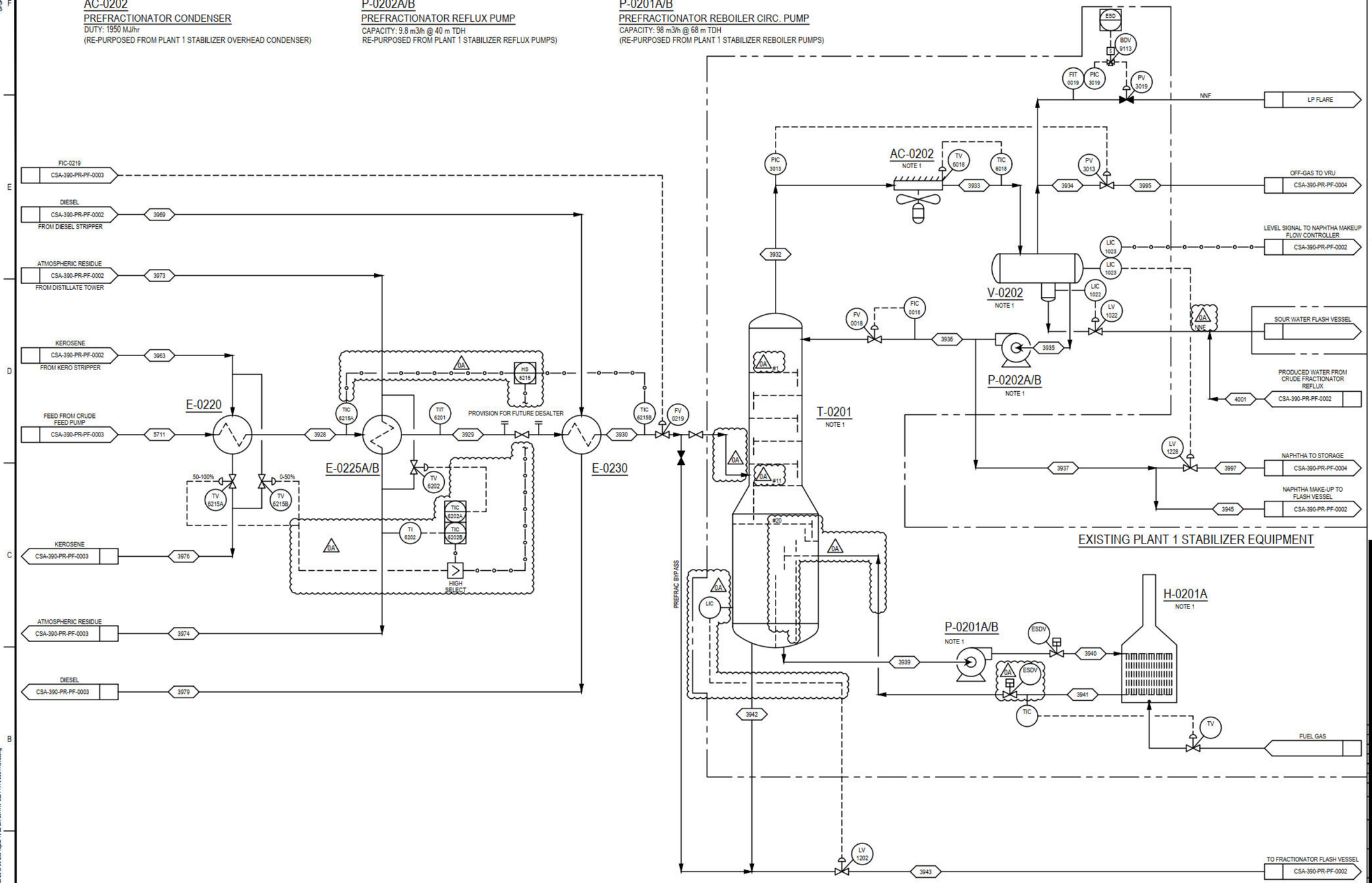

Stream		3928	3929	3930	3932	3933	3934	3935	3936	3937	3939	3940	3941	3942	3943	3945	3963	3969	3973	3974	3976	3979	3995	3997	4001	5711								
Temperature	C	43.0	72.4	107.2	121.4	79.4	79.4	79.4	80.3	80.3	194.5	194.7	226.7	226.5	222.4	80.3	199.6	300.0	251.8	84.7	171.6	100.2	75.9	69.8	57.3	33.1								
Pressure	kPag	732	722	710	290	276	276	276	546	546	296	641	300	298	241	546	1104	355	495	413	1081	355	7	121	800	787								
Std Gas Flow	STD_m3/d	---	---	---	21323	753	753	0	---	---	1	---	42968	81	2094	---	---	---	---	---	---	---	753	1023	---	---								
Liquid Vol Flow @Std Cond	m3/h	14.42	14.42	14.42	0.00	4.50	0.00	4.50	1.50	3.00	24.08	24.08	11.45	11.42	10.83	0.66	3.78	1.97	1.89	1.89	3.78	1.97	---	2.14	---	14.42								
Liquid Vol Flow @Std Cond	m3/h	---	---	---	---	---	0.00	0.00	---	---	---	---	---	---	---	---	---	---	---	0.00	---	---	---	---	0.40	---								

PRINTED: 22 October 2018 12:54:58 DWG NAME: ESTWH Updated: 2018-09-28 Project: 1WPD DWG\STWH-000-PR-PR-0001 RevC.dwg

V-0235
FRACTIONATOR FLASH DRUM
SIZE: 1524 mm ID x 3048 mm S/S

P-0235A/B
FRACTIONATOR FEED PUMP
CAPACITY: 15.3 m3/h @ 94.1 m TDH

E-0235
FRACTIONATOR FEED/ RESIDUE EXCHANGER
DUTY: 220 kW

H-0235
CRUDE FEED HEATER
DUTY: 2008 kW

P-0290
PH-NEUTRALIZER INJECTION PUMP
CAPACITY: 4.9 L/d @ 758 kPag DESIGN

TK-0290
PH-NEUTRALIZER TANK
CAPACITY: 0.76 m3

T-0240
CRUDE FRACTIONATOR
SIZE: 1524 mm ID x 27,432 mm S/S

P-0240A/B
RESIDUE PRODUCT PUMPS
CAPACITY: 4.5 m3/h @ 44 m TDH

T-0245
DIESEL STRIPPER
SIZE: 457 mm OD x 6553 mm S/F

P-0245A/B
DIESEL PUMPS
CAPACITY: 2.4 m3/h @ 30 m TDH

T-0250
KEROSENE STRIPPER
SIZE: 457 mm OD x 6553 mm S/F

P-0250A/B
KEROSENE PUMPS
CAPACITY: 5.5 m3/h @ 152 m TDH

AC-0255
FRACTIONATOR CONDENSER
DUTY: 2244 kW

V-0255
FRACTIONATOR REFLUX DRUM
SIZE: 1219 mm ID x 3048 mm S/S

P-0255A/B
FRACTIONATOR REFLUX PUMPS
CAPACITY: 22.6 m3/h @ 40 m TDH

P-0260A/B
FRACTIONATOR PRODUCED WATER PUMPS
CAPACITY: 2.5 m3/hr @ 81 m TDH

E-0240
STEAM SUPERHEATER EXCHANGER
DUTY: 35 kW

GENERAL NOTES:
1. REPURPOSED EXISITING EQUIPMENT AT BRC PLANT 1 STABILIZER.
2. PROCESS DATA IS TAKEN FROM THE SUMMER OPERATING CASE.

HOLDS:

Stream		3943	3945	3946	3948	3949	3950	3951	3952	3953	3954	3955	3956	3957	3958	3959	3960	3961	3962	3963	3964	3965	3966	3967	3968	3969	3970	3971	3972	3973	3990	3991	3992	3993	3996	3998	4000	4001
Temperature	C	222.4	80.3	209.3	209.3	210.2	217.0	217.1	343.2	139.8	57.2	57.2	57.2	57.5	57.5	57.2	209.3	202.0	194.3	199.6	311.4	306.4	299.5	300.0	300.0	300.0	310.4	311.1	285.1	251.8	147.6	299.9	299.9	299.9	57.0	57.6	57.5	57.3
Pressure	kPag	241	546	241	241	870	863	538	124	39	26	26	26	368	368	26	53	53	53	1104	78	78	78	355	355	355	124	505	502	495	345	170	170	170	7	121	39	800
Std Gas Flow	STD_m3/d	2094	---	5809	0	---	---	---	20911	69347	254	254	0	---	---	0	0	3437	---	---	0	2229	---	---	---	---	---	---	---	---	---	12916	1421	1372	10124	254	---	---	---
Liquid Vol Flow @Std Cond	m3/h	10.83	0.66	0.00	10.51	10.51	10.51	10.51	2.24	0.00	15.70	0.00	15.70	11.31	4.40	0.00	4.51	---	3.78	3.78	2.84	---	2.38	2.38	0.41	1.97	1.89	1.89	1.89	1.89	---	---	---	---	---	---	4.40	---	---
Liquid Vol Flow @Std Cond	m3/h	---	---	---	---	---	---	---	---	---	2.41	0.00	0.00	---	---	2.41	---	---	---	---	---	---	---	---	---	---	---	---	---	---	0.00	---	---	---	---	---	2.01	0.40

PRINTED: 22 October 2018 12:54:58 D:\OG\NAVE-E\STW\Updated 2018-09-28\Project 1\PFD DWG\STW-000-PR-PF-0001 RevC.dwg

AC-0260
NAPTHA COOLER
DUTY: 90 kW

AC-0245
DIESEL COOLER
DUTY: 266 kW

AC-0250
KEROSENE COOLER
DUTY: 294 kW

TK-0220
ATMOSPHERIC RESIDUE TANK
CAPACITY: 159 m3

M-0220
ATMOSPHERIC RESIDUE TANK AGITATOR

TK-0295
H2S SCAVENGER TANK
CAPACITY: 0.76 m3

P-0295
H2S SCAVENGER INJECTION PUMP
CAPACITY: 11.4 L/day @ 1586 kPa DESIGN

P-0220A/B
CRUDE FEED PUMPS
CAPACITY: 18.1 m3/hr @ 130 TDH

PREFRAC NAPHTHA
CSA-390-PR-PF-0001
3997

FRACTIONATOR NAPHTHA
CSA-390-PR-PF-0002
3998

MANUAL
AC-0260

TIC 6218
ESD
ESDV 9208
TK-0295
P-0295

PRODUCTION ACCOUNTING
FI 9222
XV 9216
3938
XV 9215

PRV
LP FLARE
TK-4005 NAPHTHA STORAGE TANK (EXISTING)

LEVEL OVERRIDE FROM KEROSENE STRIPPER
CSA-390-PR-PF-0002
0A LOW SELECT
FIC 0213

KEROSENE
CSA-390-PR-PF-0001
3976
MANUAL
AC-0250
TIC 6213
3977
FV 0213
ESD
ESDV 9203

PRODUCTION ACCOUNTING
FI 9221
XV 9213
3978
XV 9214

PRV
LP FLARE
TK-4004 KEROSENE STORAGE TANK (EXISTING)

LEVEL OVERRIDE FROM DIESEL STRIPPER
CSA-390-PR-PF-0002
0A LOW SELECT
FIC 0214

DIESEL
CSA-390-PR-PF-0001
3979
MANUAL
AC-0245
TIC 6212
3980
FV 0214
ESD
ESDV 9204

PRODUCTION ACCOUNTING
FI 9220
XV 9211
3981
XV 9212

PRV
LP FLARE
TK-4003 DIESEL STORAGE TANK (EXISTING)

OFF-SPEC RECYCLE
TRUCKED IN CRUDE OIL
TK-0601A SALES OIL TANK (EXISTING)

LIC
0A
FLOW CONTROL VALVE FV-0219
CSA-390-PR-PF-0001
FV 0218
NNF
FIC 0218
FIC 0219
FEED / KEROSENE EXCHANGER
5711
CSA-390-PR-PF-0001
5709
P-0220A/B

CRUDE FRACTIONATOR LEVEL CONTROL
CSA-390-PR-PF-0002
FIC 0200
PRODUCTION ACCOUNTING
FIT 0200
FV 0200
ESD
ESDV 9200
RESIDUE PRODUCT
CSA-390-PR-PF-0001
3974
3975
ATMOSPHERIC RESIDUE PRODUCT

M-0220
TK-0220 ATMOSPHERIC RESIDUE STORAGE TANK
TIC 6221
HEAT MEDIUM SUPPLY
TV 6221
HEAT MEDIUM RETURN
ENVIRO BOX

GENERAL NOTES:
1. PROCESS DATA IS TAKEN FROM THE SUMMER OPERATING CASE.

HOLDS:

Stream		3938	3974	3975	3976	3977	3978	3979	3980	3981	3997	3998	5711
Temperature	C	43.3	84.7	84.8	171.6	43.3	43.8	100.2	10.0	10.1	69.8	57.6	33.1
Pressure	kPag	100	413	88	1081	1031	139	355	305	133	121	121	787
Std Gas Flow	STD_m3/d	---	---	---	---	---	---	---	---	---	1023	---	---
Liquid Vol Flow @Std Cond	m3/h	6.71	1.89	1.89	3.78	3.78	3.78	1.97	1.97	1.97	2.14	4.40	14.42
Liquid Vol Flow @Std Cond	m3/h	0.00	0.00	0.00	---	0.00	---	---	0.00	---	---	---	---

PRINTED: 22 October 2018 12:54:58 D:\IO\1 NAVE ES\TWI\ Updated 2018-09-28\Project TWPD DWG\STWI-000-PR-PI-0001 Rev C.dwg

PK-270
VAPOUR RECOVERY UNIT

E-0270
INLET GAS PRE-COOLER

V-0270
SUCTION SCRUBBER

P-0270A/B
BOOSTER/CHARGE LP PUMP

C-0270
VRU COMPRESSOR

E-0275
AFTERCOOLER

V-0275
DISCHARGE SCRUBBER

P-0275A/B
BOOSTER/CHARGE HP PUMP

PK-270

PIC 3270 / PIC 3272 / PIC 3273 / PIC 3276

50-100%

0-50%

PV 3270

PV 3274

LP FUEL GAS

NNF

BDV 9270

LP FLARE

(FUTURE)
PROCESS RECYCLE

PRODUCTION ACCOUNTING
FIT 0271

PV 3276

4003

LP FLARE

PIT 3272

PIT 3273

C-0270

V-0270

V-0275

OFF-GAS FROM PREFRACTIONATOR
CSA-390-PR-PF-0001
3995

OFF-GAS FROM FRACTIONATOR
CSA-390-PR-PF-0002
3996

3999

E-0270

E-0275

LSH 1270

LSL 1270

LSH 1275

LSL 1275

P-0275A

P-0275B

PRODUCTION ACCOUNTING
FIT 0270

4002

PLANT 1 CONDENSATE STABILIZER

P-0270A

P-0270B

COOLING GLYCOL RETURN

FG

4005

COOLING GLYCOL SUPPLY

4004

GENERAL NOTES:
1. PROCESS DATA IS TAKEN FROM THE SUMMER OPERATING CASE.

HOLDS:

Stream		3995	3996	3999	4002	4003	4004	4005
Temperature	C	75.9	57.0	72.4	32.8	32.2	28.0	51.7
Pressure	kPag	7	7	7	1250	376	500	497
Std Gas Flow	STD_m3/d	753	254	1007	---	478	---	---
Liquid Vol Flow @Std Cond	m3/h	---	---	---	0.10	0.00	---	---
Liquid Vol Flow @Std Cond	m3/h	---	---	---	0.00	0.00	0.51	0.51

PRINTED: 22 October 2018 12:54:58 DWG NAME: E:\TrVF\ Updated 2018-09-28\Project 1\PID DWG\TrVF-000-PR-PK0001 Rev.C.dwg

[redacted]

HEAT & MATERIAL BALANCE

[redacted]

0	Feb 21, 2020	Issued for Use (TW19GP0001)	SJ	SJ	AR
Rev.	**Issue Date**	**Purpose of Issue**	**Prepared**	**Checked**	**Approved**

This document contains confidential and proprietary information and shall not be used without the expressed written permission of Thermo Design Engineering Ltd.

APEGA Permit P2800

[redacted]

CASE 1:

SUMMER

Name		3928	3929	3930	3932	3933	3934
Description							
Stream Properties							
---Combined Stream---	Units						
Vapour Fraction		0.000	0.000	0.000	1.000	0.035	1.000
Temperature	C	43.0	72.4	107.2	121.4	79.4	79.4
Pressure	kPag	732	722	710	290	276	276
Molar Flow	kgmole/h	72	72	72	38	38	1
Mass Flow	kg/h	11,548	11,548	11,548	3,201	3,201	81
Heat Flow	kW	-6,766	-6,578	-6,339	-1,552	-1,886	-46
Molecular Weight		160.0	160.0	160.0	85.2	85.2	60.8
Vapour Phase							
Mass Flow	kg/h	---	---	---	3,201	81	81
Mass Density	kg/m3	---	---	---	11.2	8.4	8.4
Molar Flow	kgmole/h	---	---	---	38	1	1
Actual Volume Flow	m3/h	---	---	---	285	10	10
Standard Gas Flow	Sm3/h	---	---	---	888	31	31
Mass Heat Capacity	kJ/kg-C	---	---	---	2.03	1.92	1.92
Thermal Conductivity	W/m-K	---	---	---	0.0222	0.0217	0.0217
Mass Enthalpy	kJ/kg	---	---	---	-1746	-2067	-2067
Heat Flow	kW	---	---	---	-1,552	-46	-46
Viscosity	cP	---	---	---	0.0091	0.0093	0.0093
Molecular Weight		---	---	---	85.2	60.8	60.8
Z Factor		---	---	---	0.904	0.932	0.932
Cp/Cv (Real)		---	---	---	1.074	1.101	1.101
Liquid Phase							
Volume Flow Std conditions	Sm3/h	14.42	14.42	14.42	0.00	4.50	0.00
Actual Volume Flow	m3/h	14.8	15.3	15.9	0.0	5.0	0.0
Mass Flow	kg/h	11548	11548	11548	0	3120	0
Mass Density	kg/m3	779.4	755.4	725.8	614.7	629.2	629.2
Molar Flow	kgmole/h	72	72	72	0	36	0
Mass Heat Capacity	kJ/kg-C	1.92	2.06	2.22	2.48	2.32	2.32
Thermal Conductivity	W/m-K	0.110	0.106	0.100	0.093	0.094	0.094
Mass Enthalpy	kJ/kg	-2109	-2051	-1976	-1968	-2122	-2122
Heat Flow	kW	-6766	-6578	-6339	0	-1839	0
Viscosity	cP	0.989	0.666	0.448	0.139	0.163	0.163
Surface Tension	dyne/cm	21.25	18.59	15.58	10.29	12.17	12.17
Molecular Weight		160.0	160.0	160.0	96.6	86.1	86.1
Aqueous Phase							
Mass Flow	kg/h	---	---	---	---	---	0
Mass Density	kg/m3	---	---	---	---	---	671.2
Molar Flow	kgmole/h	---	---	---	---	---	0.0
Actual Volume Flow	m3/h	---	---	---	---	---	0.0
Mass Heat Capacity	kJ/kg-C	---	---	---	---	---	2.33
Thermal Conductivity	W/m-K	---	---	---	---	---	0.093
Mass Enthalpy	kJ/kg	---	---	---	---	---	-2128
Heat Flow	kW	---	---	---	---	---	0
Viscosity	cP	---	---	---	---	---	0.168
Surface Tension	dyne/cm	---	---	---	---	---	12.0

Name		3935	3936	3937	3938	3939	3940
Description							
Stream Properties							
---Combined Stream---	Units						
Vapour Fraction		0.000	0.000	0.000	0.000	0.000	0.000
Temperature	C	79.4	80.3	80.3	43.3	194.5	194.7
Pressure	kPag	276	546	546	100	296	641
Molar Flow	kgmole/h	36	12	24	47	122	122
Mass Flow	kg/h	3,120	1,041	2,079	4,930	19,023	19,023
Heat Flow	kW	-1,839	-613	-1,225	-2,946	-9,263	-9,259
Molecular Weight		86.1	86.1	86.1	105.8	155.4	155.4
Vapour Phase							
Mass Flow	kg/h	0	---	---	---	0	---
Mass Density	kg/m3	8.4	---	---	---	13.5	---
Molar Flow	kgmole/h	0	---	---	---	0	---
Actual Volume Flow	m3/h	0	---	---	---	0	---
Standard Gas Flow	Sm3/h	0	---	---	---	0	---
Mass Heat Capacity	kJ/kg-C	1.92	---	---	---	2.29	---
Thermal Conductivity	W/m-K	0.0217	---	---	---	0.0263	---
Mass Enthalpy	kJ/kg	-2067	---	---	---	-1518	---
Heat Flow	kW	0	---	---	---	0	---
Viscosity	cP	0.0093	---	---	---	0.0095	---
Molecular Weight		60.8	---	---	---	118.0	---
Z Factor		0.932	---	---	---	0.893	---
Cp/Cv (Real)		1.101	---	---	---	1.049	---
Liquid Phase							
Volume Flow Std conditions	Sm3/h	4.50	1.50	3.00	6.71	24.08	24.08
Actual Volume Flow	m3/h	5.0	1.7	3.3	6.9	29.8	29.8
Mass Flow	kg/h	3120	1041	2079	4930	19022	19023
Mass Density	kg/m3	629.2	628.8	628.8	710.4	637.3	638.2
Molar Flow	kgmole/h	36	12	24	47	122	122
Mass Heat Capacity	kJ/kg-C	2.32	2.33	2.33	2.01	2.64	2.64
Thermal Conductivity	W/m-K	0.094	0.094	0.094	0.106	0.095	0.095
Mass Enthalpy	kJ/kg	-2122	-2120	-2120	-2151	-1753	-1752
Heat Flow	kW	-1839	-613	-1225	-2945	-9263	-9259
Viscosity	cP	0.163	0.162	0.162	0.305	0.182	0.182
Surface Tension	dyne/cm	12.17	12.09	12.09	18.42	9.54	9.53
Molecular Weight		86.1	86.1	86.1	105.8	155.4	155.4
Aqueous Phase							
Mass Flow	kg/h	0	---	---	0	---	---
Mass Density	kg/m3	671.2	---	---	993.4	---	---
Molar Flow	kgmole/h	0.0	---	---	0.0	---	---
Actual Volume Flow	m3/h	0.0	---	---	0.0	---	---
Mass Heat Capacity	kJ/kg-C	2.33	---	---	4.32	---	---
Thermal Conductivity	W/m-K	0.093	---	---	0.636	---	---
Mass Enthalpy	kJ/kg	-2128	---	---	-15763	---	---
Heat Flow	kW	0	---	---	0	---	---
Viscosity	cP	0.168	---	---	0.612	---	---
Surface Tension	dyne/cm	12.0	---	---	68.9	---	---

Name		3941	3942	3943	3945	3946	3948
Description							
Stream Properties							
---Combined Stream---	Units						
Vapour Fraction		0.619	0.003	0.079	0.000	1.000	0.000
Temperature	C	226.7	226.5	222.4	80.3	209.3	209.3
Pressure	kPag	300	298	241	546	241	241
Molar Flow	kgmole/h	122	47	47	5	10	42
Mass Flow	kg/h	19,023	9,388	9,388	460	1,181	8,667
Heat Flow	kW	-8,205	-4,342	-4,342	-271	-492	-4,121
Molecular Weight		155.4	201.1	201.1	86.1	115.4	207.4
Vapour Phase							
Mass Flow	kg/h	9,635	18	474	---	1,181	0
Mass Density	kg/m3	13.7	13.6	11.7	---	10.7	10.7
Molar Flow	kgmole/h	76	0	4	---	10	0
Actual Volume Flow	m3/h	705	1	40	---	110	0
Standard Gas Flow	Sm3/h	1,790	3	87	---	242	0
Mass Heat Capacity	kJ/kg-C	2.41	2.41	2.39	---	2.35	2.35
Thermal Conductivity	W/m-K	0.0288	0.0287	0.0282	---	0.0282	0.0282
Mass Enthalpy	kJ/kg	-1443	-1443	-1452	---	-1501	-1501
Heat Flow	kW	-3,862	-7	-191	---	-492	0
Viscosity	cP	0.0100	0.0099	0.0098	---	0.0100	0.0100
Molecular Weight		127.2	127.3	128.5	---	115.4	115.4
Z Factor		0.899	0.899	0.910	---	0.921	0.921
Cp/Cv (Real)		1.043	1.043	1.041	---	1.044	1.044
Liquid Phase							
Volume Flow Std conditions	Sm3/h	11.45	11.42	10.83	0.66	0.00	10.51
Actual Volume Flow	m3/h	14.4	14.4	13.5	0.7	0.0	12.9
Mass Flow	kg/h	9388	9370	8914	460	0	8667
Mass Density	kg/m3	652.2	652.5	661.1	628.8	673.4	673.4
Molar Flow	kgmole/h	47	47	43	5	0	42
Mass Heat Capacity	kJ/kg-C	2.70	2.70	2.67	2.33	2.62	2.62
Thermal Conductivity	W/m-K	0.094	0.094	0.095	0.094	0.094	0.094
Mass Enthalpy	kJ/kg	-1665	-1666	-1677	-2120	-1712	-1712
Heat Flow	kW	-4342	-4335	-4151	-271	0	-4121
Viscosity	cP	0.212	0.212	0.229	0.162	0.256	0.256
Surface Tension	dyne/cm	9.89	9.91	10.55	12.09	11.37	11.37
Molecular Weight		201.1	201.4	207.4	86.1	207.4	207.4
Aqueous Phase							
Mass Flow	kg/h	---	---	---	---	---	---
Mass Density	kg/m3	---	---	---	---	---	---
Molar Flow	kgmole/h	---	---	---	---	---	---
Actual Volume Flow	m3/h	---	---	---	---	---	---
Mass Heat Capacity	kJ/kg-C	---	---	---	---	---	---
Thermal Conductivity	W/m-K	---	---	---	---	---	---
Mass Enthalpy	kJ/kg	---	---	---	---	---	---
Heat Flow	kW	---	---	---	---	---	---
Viscosity	cP	---	---	---	---	---	---
Surface Tension	dyne/cm	---	---	---	---	---	---

Name		3949	3950	3951	3952	3953	3954
Description							
Stream Properties							
---Combined Stream---	Units						
Vapour Fraction		0.000	0.000	0.000	0.874	1.000	0.002
Temperature	C	210.2	217.0	217.1	343.2	139.8	57.2
Pressure	kPag	870	863	538	124	39	26
Molar Flow	kgmole/h	42	42	42	42	122	236
Mass Flow	kg/h	8,667	8,667	8,667	8,677	12,245	14,286
Heat Flow	kW	-4,115	-4,071	-4,071	-2,867	-6,888	-17,578
Molecular Weight		207.4	207.4	207.4	205.7	100.2	60.7
Vapour Phase							
Mass Flow	kg/h	---	---	---	6,676	12,245	18
Mass Density	kg/m3	---	---	---	8.4	4.3	1.8
Molar Flow	kgmole/h	---	---	---	37	122	0
Actual Volume Flow	m3/h	---	---	---	793	2,871	10
Standard Gas Flow	Sm3/h	---	---	---	871	2,889	11
Mass Heat Capacity	kJ/kg-C	---	---	---	2.77	2.04	1.85
Thermal Conductivity	W/m-K	---	---	---	0.0364	0.0215	0.0245
Mass Enthalpy	kJ/kg	---	---	---	-1145	-2025	-3139
Heat Flow	kW	---	---	---	-2,124	-6,888	-15
Viscosity	cP	---	---	---	0.0112	0.0089	0.0104
Molecular Weight		---	---	---	181.2	100.2	39.6
Z Factor		---	---	---	0.947	0.962	0.988
Cp/Cv (Real)		---	---	---	1.022	1.049	1.134
Liquid Phase							
Volume Flow Std conditions	Sm3/h	10.51	10.51	10.51	2.24	0.00	15.70
Actual Volume Flow	m3/h	12.9	13.0	13.0	3.0	0.0	16.5
Mass Flow	kg/h	8667	8667	8667	2001	0	11822
Mass Density	kg/m3	674.3	668.1	667.1	657.7	666.1	718.0
Molar Flow	kgmole/h	42	42	42	5	0	99
Mass Heat Capacity	kJ/kg-C	2.62	2.65	2.65	3.00	2.41	2.04
Thermal Conductivity	W/m-K	0.094	0.093	0.093	0.087	0.100	0.107
Mass Enthalpy	kJ/kg	-1709	-1691	-1691	-1337	-1899	-2098
Heat Flow	kW	-4115	-4071	-4071	-743	0	-6890
Viscosity	cP	0.255	0.241	0.241	0.171	0.200	0.323
Surface Tension	dyne/cm	11.31	10.82	10.82	10.42	13.37	18.88
Molecular Weight		207.4	207.4	207.4	375.5	135.5	119.1
Aqueous Phase							
Mass Flow	kg/h	---	---	---	---	---	2447
Mass Density	kg/m3	---	---	---	---	---	982.6
Molar Flow	kgmole/h	---	---	---	---	---	135.8
Actual Volume Flow	m3/h	---	---	---	---	---	2.5
Mass Heat Capacity	kJ/kg-C	---	---	---	---	---	4.33
Thermal Conductivity	W/m-K	---	---	---	---	---	0.651
Mass Enthalpy	kJ/kg	---	---	---	---	---	-15703
Heat Flow	kW	---	---	---	---	---	-10673
Viscosity	cP	---	---	---	---	---	0.484
Surface Tension	dyne/cm	---	---	---	---	---	66.5

Name		3955	3956	3957	3958	3959	3960
Description							
Stream Properties							
---Combined Stream---	Units						
Vapour Fraction		1.000	0.000	0.000	0.000	0.000	0.000
Temperature	C	57.2	57.2	57.5	57.5	57.2	209.3
Pressure	kPag	26	26	368	368	26	53
Molar Flow	kgmole/h	0	99	71	28	136	19
Mass Flow	kg/h	18	11,822	8,511	3,311	2,447	3,659
Heat Flow	kW	-15	-6,890	-4,958	-1,929	-10,673	-1,743
Molecular Weight		39.6	119.1	119.1	119.1	18.0	194.7
Vapour Phase							
Mass Flow	kg/h	18	0	---	---	0	0
Mass Density	kg/m3	1.8	1.8	---	---	1.8	5.2
Molar Flow	kgmole/h	0	0	---	---	0	0
Actual Volume Flow	m3/h	10	0	---	---	0	0
Standard Gas Flow	Sm3/h	11	0	---	---	0	0
Mass Heat Capacity	kJ/kg-C	1.85	1.85	---	---	1.85	2.30
Thermal Conductivity	W/m-K	0.0245	0.0245	---	---	0.0245	0.0257
Mass Enthalpy	kJ/kg	-3139	-3139	---	---	-3139	-1771
Heat Flow	kW	-15	0	---	---	0	0
Viscosity	cP	0.0104	0.0104	---	---	0.0104	0.0096
Molecular Weight		39.6	39.6	---	---	39.6	129.0
Z Factor		0.988	0.988	---	---	0.988	0.958
Cp/Cv (Real)		1.134	1.134	---	---	1.134	1.034
Liquid Phase							
Volume Flow Std conditions	Sm3/h	0.00	15.70	11.31	4.40	0.00	4.51
Actual Volume Flow	m3/h	0.0	16.5	11.9	4.6	0.0	5.5
Mass Flow	kg/h	0	11822	8511	3311	0	3659
Mass Density	kg/m3	718.0	718.0	718.2	718.2	718.0	662.4
Molar Flow	kgmole/h	0	99	71	28	0	19
Mass Heat Capacity	kJ/kg-C	2.04	2.04	2.04	2.04	2.04	2.63
Thermal Conductivity	W/m-K	0.107	0.107	0.107	0.107	0.107	0.097
Mass Enthalpy	kJ/kg	-2098	-2098	-2097	-2097	-2098	-1715
Heat Flow	kW	0	-6890	-4958	-1929	0	-1743
Viscosity	cP	0.323	0.323	0.322	0.322	0.323	0.214
Surface Tension	dyne/cm	18.88	18.88	18.85	18.85	18.88	12.02
Molecular Weight		119.1	119.1	119.1	119.1	119.1	194.7
Aqueous Phase							
Mass Flow	kg/h	0	0	---	---	2447	---
Mass Density	kg/m3	982.6	982.6	---	---	982.6	---
Molar Flow	kgmole/h	0.0	0.0	---	---	135.8	---
Actual Volume Flow	m3/h	0.0	0.0	---	---	2.5	---
Mass Heat Capacity	kJ/kg-C	4.33	4.33	---	---	4.33	---
Thermal Conductivity	W/m-K	0.651	0.651	---	---	0.651	---
Mass Enthalpy	kJ/kg	-15703	-15703	---	---	-15703	---
Heat Flow	kW	0	0	---	---	-10673	---
Viscosity	cP	0.484	0.484	---	---	0.484	---
Surface Tension	dyne/cm	66.5	66.5	---	---	66.5	---

Name		3961	3962	3963	3964	3965	3966
Description							
Stream Properties							
---Combined Stream---	Units						
Vapour Fraction		1.000	0.000	0.000	0.000	1.000	0.000
Temperature	C	202.0	194.3	199.6	311.4	306.4	299.5
Pressure	kPag	53	53	1104	78	78	78
Molar Flow	kgmole/h	6	15	15	8	4	6
Mass Flow	kg/h	623	3,081	3,081	2,475	428	2,091
Heat Flow	kW	-401	-1,504	-1,491	-982	-287	-851
Molecular Weight		102.9	202.1	202.1	314.8	109.0	329.2
Vapour Phase							
Mass Flow	kg/h	623	---	---	0	428	---
Mass Density	kg/m3	4.1	---	---	5.9	4.1	---
Molar Flow	kgmole/h	6	---	---	0	4	---
Actual Volume Flow	m3/h	150	---	---	0	103	---
Standard Gas Flow	Sm3/h	143	---	---	0	93	---
Mass Heat Capacity	kJ/kg-C	2.26	---	---	2.64	2.57	---
Thermal Conductivity	W/m-K	0.0261	---	---	0.0337	0.0349	---
Mass Enthalpy	kJ/kg	-2317	---	---	-1598	-2412	---
Heat Flow	kW	-401	---	---	0	-287	---
Viscosity	cP	0.0107	---	---	0.0120	0.0150	---
Molecular Weight		102.9	---	---	153.3	109.0	---
Z Factor		0.971	---	---	0.965	0.981	---
Cp/Cv (Real)		1.042	---	---	1.025	1.034	---
Liquid Phase							
Volume Flow Std conditions	Sm3/h	---	3.78	3.78	2.84	---	2.38
Actual Volume Flow	m3/h	---	4.5	4.5	3.8	---	3.1
Mass Flow	kg/h	---	3081	3081	2475	---	2091
Mass Density	kg/m3	---	681.8	679.9	654.3	---	672.5
Molar Flow	kgmole/h	---	15	15	8	---	6
Mass Heat Capacity	kJ/kg-C	---	2.56	2.58	2.92	---	2.87
Thermal Conductivity	W/m-K	---	0.100	0.100	0.090	---	0.093
Mass Enthalpy	kJ/kg	---	-1757	-1742	-1429	---	-1466
Heat Flow	kW	---	-1504	-1491	-982	---	-851
Viscosity	cP	---	0.252	0.243	0.182	---	0.208
Surface Tension	dyne/cm	---	13.71	13.33	10.65	---	12.08
Molecular Weight		---	202.1	202.1	314.8	---	329.2
Aqueous Phase							
Mass Flow	kg/h	---	---	---	---	---	---
Mass Density	kg/m3	---	---	---	---	---	---
Molar Flow	kgmole/h	---	---	---	---	---	---
Actual Volume Flow	m3/h	---	---	---	---	---	---
Mass Heat Capacity	kJ/kg-C	---	---	---	---	---	---
Thermal Conductivity	W/m-K	---	---	---	---	---	---
Mass Enthalpy	kJ/kg	---	---	---	---	---	---
Heat Flow	kW	---	---	---	---	---	---
Viscosity	cP	---	---	---	---	---	---
Surface Tension	dyne/cm	---	---	---	---	---	---

Name		3967	3968	3969	3970	3971	3972
Description							
Stream Properties							
---Combined Stream---	Units						
Vapour Fraction		0.000	0.000	0.000	0.000	0.000	0.000
Temperature	C	300.0	300.0	300.0	310.4	311.1	285.1
Pressure	kPag	355	355	355	124	505	502
Molar Flow	kgmole/h	6	1	5	4	4	4
Mass Flow	kg/h	2,091	363	1,728	1,725	1,725	1,725
Heat Flow	kW	-850	-148	-703	-689	-688	-723
Molecular Weight		329.2	329.2	329.2	439.1	439.1	439.1
Vapour Phase							
Mass Flow	kg/h	---	---	---	---	---	---
Mass Density	kg/m3	---	---	---	---	---	---
Molar Flow	kgmole/h	---	---	---	---	---	---
Actual Volume Flow	m3/h	---	---	---	---	---	---
Standard Gas Flow	Sm3/h	---	---	---	---	---	---
Mass Heat Capacity	kJ/kg-C	---	---	---	---	---	---
Thermal Conductivity	W/m-K	---	---	---	---	---	---
Mass Enthalpy	kJ/kg	---	---	---	---	---	---
Heat Flow	kW	---	---	---	---	---	---
Viscosity	cP	---	---	---	---	---	---
Molecular Weight		---	---	---	---	---	---
Z Factor		---	---	---	---	---	---
Cp/Cv (Real)		---	---	---	---	---	---
Liquid Phase							
Volume Flow Std conditions	Sm3/h	2.38	0.41	1.97	1.89	1.89	1.89
Actual Volume Flow	m3/h	3.1	0.5	2.6	2.4	2.4	2.4
Mass Flow	kg/h	2091	363	1728	1725	1725	1725
Mass Density	kg/m3	672.7	672.7	672.7	710.8	710.9	730.0
Molar Flow	kgmole/h	6	1	5	4	4	4
Mass Heat Capacity	kJ/kg-C	2.87	2.87	2.87	2.86	2.86	2.78
Thermal Conductivity	W/m-K	0.093	0.093	0.093	0.096	0.095	0.099
Mass Enthalpy	kJ/kg	-1464	-1464	-1464	-1438	-1436	-1509
Heat Flow	kW	-850	-148	-703	-689	-688	-723
Viscosity	cP	0.208	0.208	0.208	0.259	0.258	0.331
Surface Tension	dyne/cm	12.05	12.05	12.05	14.65	14.61	16.18
Molecular Weight		329.2	329.2	329.2	439.1	439.1	439.1
Aqueous Phase							
Mass Flow	kg/h	---	---	---	---	---	---
Mass Density	kg/m3	---	---	---	---	---	---
Molar Flow	kgmole/h	---	---	---	---	---	---
Actual Volume Flow	m3/h	---	---	---	---	---	---
Mass Heat Capacity	kJ/kg-C	---	---	---	---	---	---
Thermal Conductivity	W/m-K	---	---	---	---	---	---
Mass Enthalpy	kJ/kg	---	---	---	---	---	---
Heat Flow	kW	---	---	---	---	---	---
Viscosity	cP	---	---	---	---	---	---
Surface Tension	dyne/cm	---	---	---	---	---	---

Name		3973	3974	3975	3976	3977	3978
Description							
Stream Properties							
---Combined Stream---	Units						
Vapour Fraction		0.000	0.000	0.000	0.000	0.000	0.000
Temperature	C	251.8	84.7	84.8	171.6	43.3	43.8
Pressure	kPag	495	413	88	1081	1031	139
Molar Flow	kgmole/h	4	4	4	15	15	15
Mass Flow	kg/h	1,725	1,725	1,725	3,081	3,081	3,080
Heat Flow	kW	-766	-955	-955	-1,552	-1,791	-1,787
Molecular Weight		439.1	439.1	439.1	202.1	202.1	202.8
Vapour Phase							
Mass Flow	kg/h	---	---	---	---	---	---
Mass Density	kg/m3	---	---	---	---	---	---
Molar Flow	kgmole/h	---	---	---	---	---	---
Actual Volume Flow	m3/h	---	---	---	---	---	---
Standard Gas Flow	Sm3/h	---	---	---	---	---	---
Mass Heat Capacity	kJ/kg-C	---	---	---	---	---	---
Thermal Conductivity	W/m-K	---	---	---	---	---	---
Mass Enthalpy	kJ/kg	---	---	---	---	---	---
Heat Flow	kW	---	---	---	---	---	---
Viscosity	cP	---	---	---	---	---	---
Molecular Weight		---	---	---	---	---	---
Z Factor		---	---	---	---	---	---
Cp/Cv (Real)		---	---	---	---	---	---
Liquid Phase							
Volume Flow Std conditions	Sm3/h	1.89	1.89	1.89	3.78	3.78	3.78
Actual Volume Flow	m3/h	2.3	2.0	2.0	4.4	3.9	3.9
Mass Flow	kg/h	1725	1725	1725	3081	3080	3080
Mass Density	kg/m3	754.0	868.4	868.0	702.5	797.2	795.9
Molar Flow	kgmole/h	4	4	4	15	15	15
Mass Heat Capacity	kJ/kg-C	2.66	2.02	2.02	2.46	1.89	1.89
Thermal Conductivity	W/m-K	0.104	0.125	0.125	0.103	0.118	0.118
Mass Enthalpy	kJ/kg	-1600	-1991	-1991	-1813	-2088	-2088
Heat Flow	kW	-766	-954	-954	-1552	-1787	-1787
Viscosity	cP	0.476	10.155	10.112	0.301	1.162	1.153
Surface Tension	dyne/cm	18.24	29.02	29.01	15.41	25.40	25.37
Molecular Weight		439.1	440.3	440.3	202.1	202.8	202.8
Aqueous Phase							
Mass Flow	kg/h	---	0	0	---	1	---
Mass Density	kg/m3	---	960.8	960.5	---	993.7	---
Molar Flow	kgmole/h	---	0.0	0.0	---	0.1	---
Actual Volume Flow	m3/h	---	0.0	0.0	---	0.0	---
Mass Heat Capacity	kJ/kg-C	---	4.36	4.37	---	4.32	---
Thermal Conductivity	W/m-K	---	0.673	0.673	---	0.636	---
Mass Enthalpy	kJ/kg	---	-15584	-15584	---	-15763	---
Heat Flow	kW	---	-1	-1	---	-4	---
Viscosity	cP	---	0.331	0.331	---	0.612	---
Surface Tension	dyne/cm	---	61.5	61.4	---	68.9	---

Name		3979	3980	3981	3990	3991	3992
Description							
Stream Properties							
---Combined Stream---	Units						
Vapour Fraction		0.000	0.000	0.000	1.000	1.000	1.000
Temperature	C	100.2	43.3	43.4	147.6	299.9	299.9
Pressure	kPag	355	305	107	345	170	170
Molar Flow	kgmole/h	5	5	5	23	3	2
Mass Flow	kg/h	1,728	1,728	1,727	410	45	44
Heat Flow	kW	-942	-996	-994	-1,499	-161	-155
Molecular Weight		329.2	329.2	330.7	18.0	18.0	18.0
Vapour Phase							
Mass Flow	kg/h	---	---	---	410	45	44
Mass Density	kg/m3	---	---	---	2.4	1.0	1.0
Molar Flow	kgmole/h	---	---	---	23	3	2
Actual Volume Flow	m3/h	---	---	---	174	44	42
Standard Gas Flow	Sm3/h	---	---	---	538	59	57
Mass Heat Capacity	kJ/kg-C	---	---	---	1.97	2.02	2.02
Thermal Conductivity	W/m-K	---	---	---	0.0284	0.0436	0.0436
Mass Enthalpy	kJ/kg	---	---	---	-13161	-12853	-12853
Heat Flow	kW	---	---	---	-1,499	-161	-155
Viscosity	cP	---	---	---	0.0138	0.0202	0.0202
Molecular Weight		---	---	---	18.0	18.0	18.0
Z Factor		---	---	---	0.972	0.993	0.993
Cp/Cv (Real)		---	---	---	1.348	1.307	1.307
Liquid Phase							
Volume Flow Std conditions	Sm3/h	1.97	1.97	1.97	---	---	---
Actual Volume Flow	m3/h	2.1	2.0	2.0	---	---	---
Mass Flow	kg/h	1728	1727	1727	---	---	---
Mass Density	kg/m3	819.7	858.2	857.9	---	---	---
Molar Flow	kgmole/h	5	5	5	---	---	---
Mass Heat Capacity	kJ/kg-C	2.10	1.85	1.85	---	---	---
Thermal Conductivity	W/m-K	0.119	0.125	0.125	---	---	---
Mass Enthalpy	kJ/kg	-1962	-2072	-2072	---	---	---
Heat Flow	kW	-942	-994	-994	---	---	---
Viscosity	cP	2.134	6.963	6.947	---	---	---
Surface Tension	dyne/cm	25.48	29.38	29.37	---	---	---
Molecular Weight		329.2	330.7	330.7	---	---	---
Aqueous Phase							
Mass Flow	kg/h	---	0	---	0	---	---
Mass Density	kg/m3	---	993.5	---	906.0	---	---
Molar Flow	kgmole/h	---	0.0	---	0.0	---	---
Actual Volume Flow	m3/h	---	0.0	---	0.0	---	---
Mass Heat Capacity	kJ/kg-C	---	4.32	---	4.56	---	---
Thermal Conductivity	W/m-K	---	0.636	---	0.687	---	---
Mass Enthalpy	kJ/kg	---	-15763	---	-15304	---	---
Heat Flow	kW	---	-2	---	0	---	---
Viscosity	cP	---	0.612	---	0.184	---	---
Surface Tension	dyne/cm	---	68.9	---	49.2	---	---

Name		3993	3995	3996	3997	3998	3999
Description							
Stream Properties							
---Combined Stream---	Units						
Vapour Fraction		1.000	1.000	1.000	0.096	0.000	1.000
Temperature	C	299.9	75.9	57.0	69.8	57.6	72.4
Pressure	kPag	170	7	7	121	121	7
Molar Flow	kgmole/h	18	1	0	19	28	2
Mass Flow	kg/h	321	81	18	1,620	3,311	98
Heat Flow	kW	-1,148	-46	-15	-954	-1,929	-62
Molecular Weight		18.0	60.8	39.6	86.1	119.1	55.5
Vapour Phase							
Mass Flow	kg/h	321	81	18	123	---	98
Mass Density	kg/m3	1.0	2.3	1.6	5.6	---	2.1
Molar Flow	kgmole/h	18	1	0	2	---	2
Actual Volume Flow	m3/h	311	35	11	22	---	46
Standard Gas Flow	Sm3/h	422	31	11	43	---	42
Mass Heat Capacity	kJ/kg-C	2.02	1.87	1.85	1.84	---	1.87
Thermal Conductivity	W/m-K	0.0436	0.0211	0.0245	0.0190	---	0.0219
Mass Enthalpy	kJ/kg	-12853	-2067	-3139	-1983	---	-2260
Heat Flow	kW	-1,148	-46	-15	-68	---	-62
Viscosity	cP	0.0202	0.0090	0.0104	0.0083	---	0.0094
Molecular Weight		18.0	60.8	39.6	68.3	---	55.5
Z Factor		0.993	0.980	0.990	0.946	---	0.983
Cp/Cv (Real)		1.307	1.085	1.134	1.087	---	1.093
Liquid Phase							
Volume Flow Std conditions	Sm3/h	---	---	---	2.14	4.40	---
Actual Volume Flow	m3/h	---	---	---	2.3	4.6	---
Mass Flow	kg/h	---	---	---	1496	3311	---
Mass Density	kg/m3	---	---	---	645.3	717.8	---
Molar Flow	kgmole/h	---	---	---	17	28	---
Mass Heat Capacity	kJ/kg-C	---	---	---	2.25	2.04	---
Thermal Conductivity	W/m-K	---	---	---	0.097	0.107	---
Mass Enthalpy	kJ/kg	---	---	---	-2131	-2097	---
Heat Flow	kW	---	---	---	-886	-1929	---
Viscosity	cP	---	---	---	0.180	0.321	---
Surface Tension	dyne/cm	---	---	---	13.56	18.84	---
Molecular Weight		---	---	---	88.0	119.1	---
Aqueous Phase							
Mass Flow	kg/h	---	---	---	---	---	---
Mass Density	kg/m3	---	---	---	---	---	---
Molar Flow	kgmole/h	---	---	---	---	---	---
Actual Volume Flow	m3/h	---	---	---	---	---	---
Mass Heat Capacity	kJ/kg-C	---	---	---	---	---	---
Thermal Conductivity	W/m-K	---	---	---	---	---	---
Mass Enthalpy	kJ/kg	---	---	---	---	---	---
Heat Flow	kW	---	---	---	---	---	---
Viscosity	cP	---	---	---	---	---	---
Surface Tension	dyne/cm	---	---	---	---	---	---

Name		4000	4001	4002	4003	4004	4005
Description							
Stream Properties							
---Combined Stream---	Units						
Vapour Fraction		0.000	0.000	0.000	1.000	0.000	0.000
Temperature	C	57.5	57.3	32.8	32.2	28.0	51.7
Pressure	kPag	39	800	1250	376	500	497
Molar Flow	kgmole/h	113	23	1	1	20	20
Mass Flow	kg/h	2,041	406	66	32	553	553
Heat Flow	kW	-8,903	-1,769	-46	-24	-1,772	-1,759
Molecular Weight		18.0	18.0	70.9	38.4	27.9	27.9
Vapour Phase							
Mass Flow	kg/h	---	---	---	32	---	---
Mass Density	kg/m3	---	---	---	7.6	---	---
Molar Flow	kgmole/h	---	---	---	1	---	---
Actual Volume Flow	m3/h	---	---	---	4	---	---
Standard Gas Flow	Sm3/h	---	---	---	20	---	---
Mass Heat Capacity	kJ/kg-C	---	---	---	1.84	---	---
Thermal Conductivity	W/m-K	---	---	---	0.0224	---	---
Mass Enthalpy	kJ/kg	---	---	---	-2699	---	---
Heat Flow	kW	---	---	---	-24	---	---
Viscosity	cP	---	---	---	0.0097	---	---
Molecular Weight		---	---	---	38.4	---	---
Z Factor		---	---	---	0.945	---	---
Cp/Cv (Real)		---	---	---	1.169	---	---
Liquid Phase							
Volume Flow Std conditions	Sm3/h	---	---	0.10	0.00	---	---
Actual Volume Flow	m3/h	---	---	0.1	0.0	---	---
Mass Flow	kg/h	---	---	65	0	---	---
Mass Density	kg/m3	---	---	638.2	623.3	---	---
Molar Flow	kgmole/h	---	---	1	0	---	---
Mass Heat Capacity	kJ/kg-C	---	---	2.17	2.22	---	---
Thermal Conductivity	W/m-K	---	---	0.099	0.098	---	---
Mass Enthalpy	kJ/kg	---	---	-2332	-2370	---	---
Heat Flow	kW	---	---	-42	0	---	---
Viscosity	cP	---	---	0.198	0.186	---	---
Surface Tension	dyne/cm	---	---	14.14	13.44	---	---
Molecular Weight		---	---	74.1	70.5	---	---
Aqueous Phase							
Mass Flow	kg/h	2041	406	1	0	553	553
Mass Density	kg/m3	982.4	982.8	1001.8	1002.0	1066.4	1047.1
Molar Flow	kgmole/h	113.3	22.5	0.1	0.0	19.8	19.8
Actual Volume Flow	m3/h	2.1	0.4	0.0	0.0	0.5	0.5
Mass Heat Capacity	kJ/kg-C	4.33	4.33	4.31	4.31	3.39	3.46
Thermal Conductivity	W/m-K	0.651	0.651	0.622	0.621	0.406	0.422
Mass Enthalpy	kJ/kg	-15702	-15702	-15807	-15811	-11544	-11463
Heat Flow	kW	-8903	-1769	-4	0	-1772	-1759
Viscosity	cP	0.482	0.483	0.751	0.761	2.376	1.421
Surface Tension	dyne/cm	66.4	66.4	70.7	70.8	58.7	55.7

Name		5711
Description		
Stream Properties		
---Combined Stream---	Units	
Vapour Fraction		0.000
Temperature	C	33.1
Pressure	kPag	787
Molar Flow	kgmole/h	72
Mass Flow	kg/h	11,548
Heat Flow	kW	-6,826
Molecular Weight		160.0
Vapour Phase		
Mass Flow	kg/h	---
Mass Density	kg/m3	---
Molar Flow	kgmole/h	---
Actual Volume Flow	m3/h	---
Standard Gas Flow	Sm3/h	---
Mass Heat Capacity	kJ/kg-C	---
Thermal Conductivity	W/m-K	---
Mass Enthalpy	kJ/kg	---
Heat Flow	kW	---
Viscosity	cP	---
Molecular Weight		---
Z Factor		---
Cp/Cv (Real)		---
Liquid Phase		
Volume Flow Std conditions	Sm3/h	14.42
Actual Volume Flow	m3/h	14.7
Mass Flow	kg/h	11548
Mass Density	kg/m3	787.3
Molar Flow	kgmole/h	72
Mass Heat Capacity	kJ/kg-C	1.88
Thermal Conductivity	W/m-K	0.112
Mass Enthalpy	kJ/kg	-2128
Heat Flow	kW	-6826
Viscosity	cP	1.150
Surface Tension	dyne/cm	22.16
Molecular Weight		160.0
Aqueous Phase		
Mass Flow	kg/h	---
Mass Density	kg/m3	---
Molar Flow	kgmole/h	---
Actual Volume Flow	m3/h	---
Mass Heat Capacity	kJ/kg-C	---
Thermal Conductivity	W/m-K	---
Mass Enthalpy	kJ/kg	---
Heat Flow	kW	---
Viscosity	cP	---
Surface Tension	dyne/cm	---

[redacted]

CASE 2:
WINTER

Name		3928	3929	3930	3932	3933	3934
Description							
Stream Properties							
---Combined Stream---	Units						
Vapour Fraction		0.000	0.000	0.000	1.000	0.036	1.000
Temperature	C	33.9	65.4	101.7	121.2	79.4	79.4
Pressure	kPag	761	751	739	290	276	276
Molar Flow	kgmole/h	72	72	72	38	38	1
Mass Flow	kg/h	11,548	11,548	11,548	3,198	3,198	81
Heat Flow	kW	-6,821	-6,624	-6,378	-1,551	-1,884	-47
Molecular Weight		160.0	160.0	160.0	85.1	85.1	60.9
Vapour Phase							
Mass Flow	kg/h	---	---	---	3,198	81	81
Mass Density	kg/m3	---	---	---	11.2	8.4	8.4
Molar Flow	kgmole/h	---	---	---	38	1	1
Actual Volume Flow	m3/h	---	---	---	285	10	10
Standard Gas Flow	Sm3/h	---	---	---	888	32	32
Mass Heat Capacity	kJ/kg-C	---	---	---	2.03	1.92	1.92
Thermal Conductivity	W/m-K	---	---	---	0.0222	0.0217	0.0217
Mass Enthalpy	kJ/kg	---	---	---	-1746	-2066	-2066
Heat Flow	kW	---	---	---	-1,551	-47	-47
Viscosity	cP	---	---	---	0.0091	0.0093	0.0093
Molecular Weight		---	---	---	85.1	60.9	60.9
Z Factor		---	---	---	0.904	0.931	0.931
Cp/Cv (Real)		---	---	---	1.074	1.101	1.101
Liquid Phase							
Volume Flow Std conditions	Sm3/h	14.42	14.42	14.42	---	4.49	0.00
Actual Volume Flow	m3/h	14.7	15.2	15.8	---	5.0	0.0
Mass Flow	kg/h	11548	11548	11548	---	3117	0
Mass Density	kg/m3	786.6	761.3	730.7	---	629.1	629.1
Molar Flow	kgmole/h	72	72	72	---	36	0
Mass Heat Capacity	kJ/kg-C	1.88	2.03	2.20	---	2.32	2.32
Thermal Conductivity	W/m-K	0.112	0.107	0.101	---	0.094	0.094
Mass Enthalpy	kJ/kg	-2126	-2065	-1988	---	-2122	-2122
Heat Flow	kW	-6821	-6624	-6378	---	-1837	0
Viscosity	cP	1.135	0.728	0.475	---	0.162	0.162
Surface Tension	dyne/cm	22.08	19.22	16.05	---	12.16	12.16
Molecular Weight		160.0	160.0	160.0	---	86.0	86.0
Aqueous Phase							
Mass Flow	kg/h	---	---	---	---	---	0
Mass Density	kg/m3	---	---	---	---	---	671.0
Molar Flow	kgmole/h	---	---	---	---	---	0.0
Actual Volume Flow	m3/h	---	---	---	---	---	0.0
Mass Heat Capacity	kJ/kg-C	---	---	---	---	---	2.33
Thermal Conductivity	W/m-K	---	---	---	---	---	0.093
Mass Enthalpy	kJ/kg	---	---	---	---	---	-2128
Heat Flow	kW	---	---	---	---	---	0
Viscosity	cP	---	---	---	---	---	0.168
Surface Tension	dyne/cm	---	---	---	---	---	12.0

Name		3935	3936	3937	3938	3939	3940
Description							
Stream Properties							
---Combined Stream---	Units						
Vapour Fraction		0.000	0.000	0.000	0.000	0.000	0.000
Temperature	C	79.4	80.3	80.3	43.3	194.2	194.5
Pressure	kPag	276	546	546	100	296	641
Molar Flow	kgmole/h	36	12	24	47	126	126
Mass Flow	kg/h	3,117	1,041	2,076	4,930	19,426	19,426
Heat Flow	kW	-1,837	-613	-1,222	-2,945	-9,463	-9,459
Molecular Weight		86.0	86.0	86.0	105.8	154.7	154.7
Vapour Phase							
Mass Flow	kg/h	0	---	---	---	---	---
Mass Density	kg/m3	8.4	---	---	---	---	---
Molar Flow	kgmole/h	0	---	---	---	---	---
Actual Volume Flow	m3/h	0	---	---	---	---	---
Standard Gas Flow	Sm3/h	0	---	---	---	---	---
Mass Heat Capacity	kJ/kg-C	1.92	---	---	---	---	---
Thermal Conductivity	W/m-K	0.0217	---	---	---	---	---
Mass Enthalpy	kJ/kg	-2066	---	---	---	---	---
Heat Flow	kW	0	---	---	---	---	---
Viscosity	cP	0.0093	---	---	---	---	---
Molecular Weight		60.9	---	---	---	---	---
Z Factor		0.931	---	---	---	---	---
Cp/Cv (Real)		1.101	---	---	---	---	---
Liquid Phase							
Volume Flow Std conditions	Sm3/h	4.49	1.50	2.99	6.71	24.61	24.61
Actual Volume Flow	m3/h	5.0	1.7	3.3	6.9	30.5	30.5
Mass Flow	kg/h	3117	1041	2076	4929	19426	19426
Mass Density	kg/m3	629.1	628.6	628.6	710.4	636.7	637.6
Molar Flow	kgmole/h	36	12	24	47	126	126
Mass Heat Capacity	kJ/kg-C	2.32	2.33	2.33	2.01	2.64	2.64
Thermal Conductivity	W/m-K	0.094	0.094	0.094	0.106	0.095	0.095
Mass Enthalpy	kJ/kg	-2122	-2120	-2120	-2151	-1754	-1753
Heat Flow	kW	-1837	-613	-1222	-2945	-9463	-9459
Viscosity	cP	0.162	0.161	0.161	0.305	0.181	0.181
Surface Tension	dyne/cm	12.16	12.08	12.08	18.42	9.53	9.51
Molecular Weight		86.0	86.0	86.0	105.8	154.7	154.7
Aqueous Phase							
Mass Flow	kg/h	0	---	---	0	---	---
Mass Density	kg/m3	671.0	---	---	993.4	---	---
Molar Flow	kgmole/h	0.0	---	---	0.0	---	---
Actual Volume Flow	m3/h	0.0	---	---	0.0	---	---
Mass Heat Capacity	kJ/kg-C	2.33	---	---	4.32	---	---
Thermal Conductivity	W/m-K	0.093	---	---	0.636	---	---
Mass Enthalpy	kJ/kg	-2128	---	---	-15763	---	---
Heat Flow	kW	0	---	---	0	---	---
Viscosity	cP	0.168	---	---	0.612	---	---
Surface Tension	dyne/cm	12.0	---	---	68.9	---	---

Name		3941	3942	3943	3945	3946	3948
Description							
Stream Properties							
---Combined Stream---	Units						
Vapour Fraction		0.628	0.003	0.079	0.000	1.000	0.000
Temperature	C	226.7	226.5	222.4	80.3	209.4	209.4
Pressure	kPag	300	298	241	546	241	241
Molar Flow	kgmole/h	126	47	47	5	10	42
Mass Flow	kg/h	19,426	9,391	9,391	460	1,183	8,668
Heat Flow	kW	-8,366	-4,344	-4,344	-271	-493	-4,121
Molecular Weight		154.7	201.1	201.1	86.0	115.4	207.4
Vapour Phase							
Mass Flow	kg/h	10,034	18	475	---	1,183	0
Mass Density	kg/m3	13.7	13.6	11.7	---	10.7	10.7
Molar Flow	kgmole/h	79	0	4	---	10	0
Actual Volume Flow	m3/h	734	1	40	---	111	0
Standard Gas Flow	Sm3/h	1,864	3	87	---	242	0
Mass Heat Capacity	kJ/kg-C	2.41	2.41	2.39	---	2.35	2.35
Thermal Conductivity	W/m-K	0.0288	0.0287	0.0282	---	0.0282	0.0282
Mass Enthalpy	kJ/kg	-1443	-1443	-1452	---	-1501	-1501
Heat Flow	kW	-4,022	-7	-191	---	-493	0
Viscosity	cP	0.0100	0.0099	0.0098	---	0.0100	0.0100
Molecular Weight		127.3	127.3	128.5	---	115.4	115.4
Z Factor		0.899	0.899	0.910	---	0.921	0.921
Cp/Cv (Real)		1.043	1.043	1.041	---	1.044	1.044
Liquid Phase							
Volume Flow Std conditions	Sm3/h	11.45	11.43	10.83	0.66	0.00	10.51
Actual Volume Flow	m3/h	14.4	14.4	13.5	0.7	0.0	12.9
Mass Flow	kg/h	9391	9373	8916	460	0	8668
Mass Density	kg/m3	652.1	652.4	661.1	628.6	673.4	673.4
Molar Flow	kgmole/h	47	47	43	5	0	42
Mass Heat Capacity	kJ/kg-C	2.70	2.70	2.67	2.33	2.62	2.62
Thermal Conductivity	W/m-K	0.094	0.094	0.095	0.094	0.094	0.094
Mass Enthalpy	kJ/kg	-1665	-1666	-1676	-2120	-1712	-1712
Heat Flow	kW	-4344	-4337	-4152	-271	0	-4121
Viscosity	cP	0.212	0.212	0.228	0.161	0.256	0.256
Surface Tension	dyne/cm	9.88	9.91	10.55	12.08	11.36	11.36
Molecular Weight		201.1	201.3	207.3	86.0	207.4	207.4
Aqueous Phase							
Mass Flow	kg/h	---	---	---	---	---	---
Mass Density	kg/m3	---	---	---	---	---	---
Molar Flow	kgmole/h	---	---	---	---	---	---
Actual Volume Flow	m3/h	---	---	---	---	---	---
Mass Heat Capacity	kJ/kg-C	---	---	---	---	---	---
Thermal Conductivity	W/m-K	---	---	---	---	---	---
Mass Enthalpy	kJ/kg	---	---	---	---	---	---
Heat Flow	kW	---	---	---	---	---	---
Viscosity	cP	---	---	---	---	---	---
Surface Tension	dyne/cm	---	---	---	---	---	---

Name		3949	3950	3951	3952	3953	3954
Description							
Stream Properties							
---Combined Stream---	Units						
Vapour Fraction		0.000	0.000	0.000	0.874	1.000	0.002
Temperature	C	210.2	217.0	217.1	343.2	139.8	57.2
Pressure	kPag	870	863	538	124	39	26
Molar Flow	kgmole/h	42	42	42	42	122	236
Mass Flow	kg/h	8,668	8,668	8,668	8,678	12,250	14,292
Heat Flow	kW	-4,115	-4,072	-4,072	-2,867	-6,890	-17,581
Molecular Weight		207.4	207.4	207.4	205.7	100.2	60.7
Vapour Phase							
Mass Flow	kg/h	---	---	---	6,677	12,250	18
Mass Density	kg/m3	---	---	---	8.4	4.3	1.8
Molar Flow	kgmole/h	---	---	---	37	122	0
Actual Volume Flow	m3/h	---	---	---	794	2,872	10
Standard Gas Flow	Sm3/h	---	---	---	872	2,890	11
Mass Heat Capacity	kJ/kg-C	---	---	---	2.77	2.04	1.85
Thermal Conductivity	W/m-K	---	---	---	0.0364	0.0215	0.0245
Mass Enthalpy	kJ/kg	---	---	---	-1145	-2025	-3139
Heat Flow	kW	---	---	---	-2,124	-6,890	-15
Viscosity	cP	---	---	---	0.0112	0.0089	0.0104
Molecular Weight		---	---	---	181.2	100.2	39.5
Z Factor		---	---	---	0.947	0.962	0.988
Cp/Cv (Real)		---	---	---	1.022	1.049	1.134
Liquid Phase							
Volume Flow Std conditions	Sm3/h	10.51	10.51	10.51	2.24	0.00	15.71
Actual Volume Flow	m3/h	12.9	13.0	13.0	3.0	0.0	16.5
Mass Flow	kg/h	8668	8668	8668	2000	0	11827
Mass Density	kg/m3	674.3	668.1	667.0	657.7	666.1	718.0
Molar Flow	kgmole/h	42	42	42	5	0	99
Mass Heat Capacity	kJ/kg-C	2.62	2.65	2.65	3.00	2.41	2.04
Thermal Conductivity	W/m-K	0.094	0.093	0.093	0.087	0.100	0.107
Mass Enthalpy	kJ/kg	-1709	-1691	-1691	-1337	-1899	-2098
Heat Flow	kW	-4115	-4072	-4072	-743	0	-6893
Viscosity	cP	0.255	0.241	0.241	0.171	0.200	0.323
Surface Tension	dyne/cm	11.31	10.82	10.82	10.42	13.37	18.88
Molecular Weight		207.4	207.4	207.4	375.5	135.5	119.1
Aqueous Phase							
Mass Flow	kg/h	---	---	---	---	---	2447
Mass Density	kg/m3	---	---	---	---	---	982.6
Molar Flow	kgmole/h	---	---	---	---	---	135.8
Actual Volume Flow	m3/h	---	---	---	---	---	2.5
Mass Heat Capacity	kJ/kg-C	---	---	---	---	---	4.33
Thermal Conductivity	W/m-K	---	---	---	---	---	0.651
Mass Enthalpy	kJ/kg	---	---	---	---	---	-15703
Heat Flow	kW	---	---	---	---	---	-10673
Viscosity	cP	---	---	---	---	---	0.483
Surface Tension	dyne/cm	---	---	---	---	---	66.5

Name		3955	3956	3957	3958	3959	3960
Description							
Stream Properties							
---Combined Stream---	Units						
Vapour Fraction		1.000	0.000	0.000	0.000	0.000	0.000
Temperature	C	57.2	57.2	57.5	57.5	57.2	209.3
Pressure	kPag	26	26	368	368	26	53
Molar Flow	kgmole/h	0	99	71	28	136	19
Mass Flow	kg/h	18	11,827	8,513	3,314	2,447	3,659
Heat Flow	kW	-15	-6,893	-4,960	-1,930	-10,673	-1,743
Molecular Weight		39.5	119.1	119.1	119.1	18.0	194.7
Vapour Phase							
Mass Flow	kg/h	18	0	---	---	0	0
Mass Density	kg/m3	1.8	1.8	---	---	1.8	5.2
Molar Flow	kgmole/h	0	0	---	---	0	0
Actual Volume Flow	m3/h	10	0	---	---	0	0
Standard Gas Flow	Sm3/h	11	0	---	---	0	0
Mass Heat Capacity	kJ/kg-C	1.85	1.85	---	---	1.85	2.30
Thermal Conductivity	W/m-K	0.0245	0.0245	---	---	0.0245	0.0257
Mass Enthalpy	kJ/kg	-3139	-3139	---	---	-3139	-1771
Heat Flow	kW	-15	0	---	---	0	0
Viscosity	cP	0.0104	0.0104	---	---	0.0104	0.0096
Molecular Weight		39.5	39.5	---	---	39.5	129.0
Z Factor		0.988	0.988	---	---	0.988	0.958
Cp/Cv (Real)		1.134	1.134	---	---	1.134	1.034
Liquid Phase							
Volume Flow Std conditions	Sm3/h	0.00	15.71	11.31	4.40	0.00	4.51
Actual Volume Flow	m3/h	0.0	16.5	11.9	4.6	0.0	5.5
Mass Flow	kg/h	0	11827	8513	3314	0	3659
Mass Density	kg/m3	718.0	718.0	718.2	718.2	718.0	662.4
Molar Flow	kgmole/h	0	99	71	28	0	19
Mass Heat Capacity	kJ/kg-C	2.04	2.04	2.04	2.04	2.04	2.63
Thermal Conductivity	W/m-K	0.107	0.107	0.107	0.107	0.107	0.097
Mass Enthalpy	kJ/kg	-2098	-2098	-2097	-2097	-2098	-1715
Heat Flow	kW	0	-6893	-4960	-1930	0	-1743
Viscosity	cP	0.323	0.323	0.322	0.322	0.323	0.214
Surface Tension	dyne/cm	18.88	18.88	18.85	18.85	18.88	12.02
Molecular Weight		119.1	119.1	119.1	119.1	119.1	194.7
Aqueous Phase							
Mass Flow	kg/h	0	0	---	---	2447	---
Mass Density	kg/m3	982.6	982.6	---	---	982.6	---
Molar Flow	kgmole/h	0.0	0.0	---	---	135.8	---
Actual Volume Flow	m3/h	0.0	0.0	---	---	2.5	---
Mass Heat Capacity	kJ/kg-C	4.33	4.33	---	---	4.33	---
Thermal Conductivity	W/m-K	0.651	0.651	---	---	0.651	---
Mass Enthalpy	kJ/kg	-15703	-15703	---	---	-15703	---
Heat Flow	kW	0	0	---	---	-10673	---
Viscosity	cP	0.483	0.483	---	---	0.483	---
Surface Tension	dyne/cm	66.5	66.5	---	---	66.5	---

Name		3961	3962	3963	3964	3965	3966
Description							
Stream Properties							
---Combined Stream---	Units						
Vapour Fraction		1.000	0.000	0.000	0.000	1.000	0.000
Temperature	C	202.0	194.3	199.6	311.4	306.4	299.5
Pressure	kPag	53	53	1104	78	78	78
Molar Flow	kgmole/h	6	15	15	8	4	6
Mass Flow	kg/h	623	3,081	3,081	2,475	428	2,091
Heat Flow	kW	-401	-1,504	-1,491	-982	-287	-851
Molecular Weight		102.9	202.1	202.1	314.8	109.0	329.2
Vapour Phase							
Mass Flow	kg/h	623	---	---	0	428	---
Mass Density	kg/m3	4.1	---	---	5.9	4.1	---
Molar Flow	kgmole/h	6	---	---	0	4	---
Actual Volume Flow	m3/h	150	---	---	0	103	---
Standard Gas Flow	Sm3/h	143	---	---	0	93	---
Mass Heat Capacity	kJ/kg-C	2.26	---	---	2.64	2.57	---
Thermal Conductivity	W/m-K	0.0261	---	---	0.0337	0.0349	---
Mass Enthalpy	kJ/kg	-2317	---	---	-1597	-2412	---
Heat Flow	kW	-401	---	---	0	-287	---
Viscosity	cP	0.0107	---	---	0.0120	0.0150	---
Molecular Weight		102.9	---	---	153.3	109.0	---
Z Factor		0.971	---	---	0.965	0.981	---
Cp/Cv (Real)		1.042	---	---	1.025	1.034	---
Liquid Phase							
Volume Flow Std conditions	Sm3/h	---	3.78	3.78	2.84	---	2.38
Actual Volume Flow	m3/h	---	4.5	4.5	3.8	---	3.1
Mass Flow	kg/h	---	3081	3081	2475	---	2091
Mass Density	kg/m3	---	681.8	679.9	654.3	---	672.5
Molar Flow	kgmole/h	---	15	15	8	---	6
Mass Heat Capacity	kJ/kg-C	---	2.56	2.58	2.92	---	2.87
Thermal Conductivity	W/m-K	---	0.100	0.100	0.090	---	0.093
Mass Enthalpy	kJ/kg	---	-1757	-1742	-1429	---	-1466
Heat Flow	kW	---	-1504	-1491	-982	---	-851
Viscosity	cP	---	0.252	0.243	0.182	---	0.208
Surface Tension	dyne/cm	---	13.71	13.33	10.65	---	12.08
Molecular Weight		---	202.1	202.1	314.8	---	329.2
Aqueous Phase							
Mass Flow	kg/h	---	---	---	---	---	---
Mass Density	kg/m3	---	---	---	---	---	---
Molar Flow	kgmole/h	---	---	---	---	---	---
Actual Volume Flow	m3/h	---	---	---	---	---	---
Mass Heat Capacity	kJ/kg-C	---	---	---	---	---	---
Thermal Conductivity	W/m-K	---	---	---	---	---	---
Mass Enthalpy	kJ/kg	---	---	---	---	---	---
Heat Flow	kW	---	---	---	---	---	---
Viscosity	cP	---	---	---	---	---	---
Surface Tension	dyne/cm	---	---	---	---	---	---

Name		3967	3968	3969	3970	3971	3972
Description							
Stream Properties							
---Combined Stream---	Units						
Vapour Fraction		0.000	0.000	0.000	0.000	0.000	0.000
Temperature	C	300.0	300.0	300.0	310.4	311.1	285.1
Pressure	kPag	355	355	355	124	505	502
Molar Flow	kgmole/h	6	1	5	4	4	4
Mass Flow	kg/h	2,091	363	1,728	1,725	1,725	1,725
Heat Flow	kW	-850	-148	-703	-689	-688	-723
Molecular Weight		329.2	329.2	329.2	439.1	439.1	439.1
Vapour Phase							
Mass Flow	kg/h	---	---	---	---	---	---
Mass Density	kg/m3	---	---	---	---	---	---
Molar Flow	kgmole/h	---	---	---	---	---	---
Actual Volume Flow	m3/h	---	---	---	---	---	---
Standard Gas Flow	Sm3/h	---	---	---	---	---	---
Mass Heat Capacity	kJ/kg-C	---	---	---	---	---	---
Thermal Conductivity	W/m-K	---	---	---	---	---	---
Mass Enthalpy	kJ/kg	---	---	---	---	---	---
Heat Flow	kW	---	---	---	---	---	---
Viscosity	cP	---	---	---	---	---	---
Molecular Weight		---	---	---	---	---	---
Z Factor		---	---	---	---	---	---
Cp/Cv (Real)		---	---	---	---	---	---
Liquid Phase							
Volume Flow Std conditions	Sm3/h	2.38	0.41	1.97	1.89	1.89	1.89
Actual Volume Flow	m3/h	3.1	0.5	2.6	2.4	2.4	2.4
Mass Flow	kg/h	2091	363	1728	1725	1725	1725
Mass Density	kg/m3	672.7	672.7	672.7	710.8	710.9	730.0
Molar Flow	kgmole/h	6	1	5	4	4	4
Mass Heat Capacity	kJ/kg-C	2.87	2.87	2.87	2.86	2.86	2.78
Thermal Conductivity	W/m-K	0.093	0.093	0.093	0.096	0.095	0.099
Mass Enthalpy	kJ/kg	-1464	-1464	-1464	-1438	-1436	-1509
Heat Flow	kW	-850	-148	-703	-689	-688	-723
Viscosity	cP	0.208	0.208	0.208	0.259	0.258	0.331
Surface Tension	dyne/cm	12.05	12.05	12.05	14.65	14.61	16.18
Molecular Weight		329.2	329.2	329.2	439.1	439.1	439.1
Aqueous Phase							
Mass Flow	kg/h	---	---	---	---	---	---
Mass Density	kg/m3	---	---	---	---	---	---
Molar Flow	kgmole/h	---	---	---	---	---	---
Actual Volume Flow	m3/h	---	---	---	---	---	---
Mass Heat Capacity	kJ/kg-C	---	---	---	---	---	---
Thermal Conductivity	W/m-K	---	---	---	---	---	---
Mass Enthalpy	kJ/kg	---	---	---	---	---	---
Heat Flow	kW	---	---	---	---	---	---
Viscosity	cP	---	---	---	---	---	---
Surface Tension	dyne/cm	---	---	---	---	---	---

Name		3973	3974	3975	3976	3977	3978
Description							
Stream Properties							
---Combined Stream---	Units						
Vapour Fraction		0.000	0.000	0.000	0.000	0.000	0.000
Temperature	C	251.8	75.6	75.8	76.2	43.3	43.8
Pressure	kPag	495	413	89	1081	1031	139
Molar Flow	kgmole/h	4	4	4	15	15	15
Mass Flow	kg/h	1,725	1,725	1,725	3,081	3,081	3,080
Heat Flow	kW	-766	-963	-963	-1,736	-1,791	-1,787
Molecular Weight		439.1	439.1	439.1	202.1	202.1	202.8
Vapour Phase							
Mass Flow	kg/h	---	---	---	---	---	---
Mass Density	kg/m3	---	---	---	---	---	---
Molar Flow	kgmole/h	---	---	---	---	---	---
Actual Volume Flow	m3/h	---	---	---	---	---	---
Standard Gas Flow	Sm3/h	---	---	---	---	---	---
Mass Heat Capacity	kJ/kg-C	---	---	---	---	---	---
Thermal Conductivity	W/m-K	---	---	---	---	---	---
Mass Enthalpy	kJ/kg	---	---	---	---	---	---
Heat Flow	kW	---	---	---	---	---	---
Viscosity	cP	---	---	---	---	---	---
Molecular Weight		---	---	---	---	---	---
Z Factor		---	---	---	---	---	---
Cp/Cv (Real)		---	---	---	---	---	---
Liquid Phase							
Volume Flow Std conditions	Sm3/h	1.89	1.89	1.89	3.78	3.78	3.78
Actual Volume Flow	m3/h	2.3	2.0	2.0	4.0	3.9	3.9
Mass Flow	kg/h	1725	1724	1724	3081	3080	3080
Mass Density	kg/m3	754.0	874.4	874.1	774.1	797.2	795.9
Molar Flow	kgmole/h	4	4	4	15	15	15
Mass Heat Capacity	kJ/kg-C	2.66	1.98	1.98	2.04	1.89	1.89
Thermal Conductivity	W/m-K	0.104	0.126	0.126	0.114	0.118	0.118
Mass Enthalpy	kJ/kg	-1600	-2008	-2008	-2026	-2088	-2088
Heat Flow	kW	-766	-962	-962	-1734	-1787	-1787
Viscosity	cP	0.476	12.822	12.761	0.752	1.162	1.153
Surface Tension	dyne/cm	18.24	29.59	29.58	22.83	25.40	25.37
Molecular Weight		439.1	440.9	440.8	202.3	202.8	202.8
Aqueous Phase							
Mass Flow	kg/h	---	0	0	0	1	---
Mass Density	kg/m3	---	968.1	967.9	967.9	993.7	---
Molar Flow	kgmole/h	---	0.0	0.0	0.0	0.1	---
Actual Volume Flow	m3/h	---	0.0	0.0	0.0	0.0	---
Mass Heat Capacity	kJ/kg-C	---	4.35	4.35	4.35	4.32	---
Thermal Conductivity	W/m-K	---	0.667	0.667	0.667	0.636	---
Mass Enthalpy	kJ/kg	---	-15623	-15623	-15620	-15763	---
Heat Flow	kW	---	-1	-1	-1	-4	---
Viscosity	cP	---	0.371	0.370	0.368	0.612	---
Surface Tension	dyne/cm	---	63.1	63.1	63.0	68.9	---

Name		3979	3980	3981	3990	3991	3992
Description							
Stream Properties							
---Combined Stream---	Units						
Vapour Fraction		0.000	0.000	0.000	1.000	1.000	1.000
Temperature	C	93.1	43.3	43.4	147.6	299.9	299.9
Pressure	kPag	355	305	107	345	170	170
Molar Flow	kgmole/h	5	5	5	23	3	2
Mass Flow	kg/h	1,728	1,728	1,727	410	45	44
Heat Flow	kW	-949	-996	-994	-1,499	-161	-155
Molecular Weight		329.2	329.2	330.7	18.0	18.0	18.0
Vapour Phase							
Mass Flow	kg/h	---	---	---	410	45	44
Mass Density	kg/m3	---	---	---	2.4	1.0	1.0
Molar Flow	kgmole/h	---	---	---	23	3	2
Actual Volume Flow	m3/h	---	---	---	174	44	42
Standard Gas Flow	Sm3/h	---	---	---	538	59	57
Mass Heat Capacity	kJ/kg-C	---	---	---	1.97	2.02	2.02
Thermal Conductivity	W/m-K	---	---	---	0.0284	0.0436	0.0436
Mass Enthalpy	kJ/kg	---	---	---	-13161	-12853	-12853
Heat Flow	kW	---	---	---	-1,499	-161	-155
Viscosity	cP	---	---	---	0.0138	0.0202	0.0202
Molecular Weight		---	---	---	18.0	18.0	18.0
Z Factor		---	---	---	0.972	0.993	0.993
Cp/Cv (Real)		---	---	---	1.348	1.307	1.307
Liquid Phase							
Volume Flow Std conditions	Sm3/h	1.97	1.97	1.97	---	---	---
Actual Volume Flow	m3/h	2.1	2.0	2.0	---	---	---
Mass Flow	kg/h	1728	1727	1727	---	---	---
Mass Density	kg/m3	824.5	858.2	857.9	---	---	---
Molar Flow	kgmole/h	5	5	5	---	---	---
Mass Heat Capacity	kJ/kg-C	2.07	1.85	1.85	---	---	---
Thermal Conductivity	W/m-K	0.120	0.125	0.125	---	---	---
Mass Enthalpy	kJ/kg	-1977	-2072	-2072	---	---	---
Heat Flow	kW	-949	-994	-994	---	---	---
Viscosity	cP	2.456	6.963	6.947	---	---	---
Surface Tension	dyne/cm	25.98	29.38	29.37	---	---	---
Molecular Weight		329.2	330.7	330.7	---	---	---
Aqueous Phase							
Mass Flow	kg/h	---	0	---	0	---	---
Mass Density	kg/m3	---	993.5	---	906.0	---	---
Molar Flow	kgmole/h	---	0.0	---	0.0	---	---
Actual Volume Flow	m3/h	---	0.0	---	0.0	---	---
Mass Heat Capacity	kJ/kg-C	---	4.32	---	4.56	---	---
Thermal Conductivity	W/m-K	---	0.636	---	0.687	---	---
Mass Enthalpy	kJ/kg	---	-15763	---	-15304	---	---
Heat Flow	kW	---	-2	---	0	---	---
Viscosity	cP	---	0.612	---	0.184	---	---
Surface Tension	dyne/cm	---	68.9	---	49.2	---	---

Name		3993	3995	3996	3997	3998	3999
Description							
Stream Properties							
---Combined Stream---	Units						
Vapour Fraction		1.000	1.000	1.000	0.096	0.000	1.000
Temperature	C	299.9	75.9	57.0	69.7	57.6	72.4
Pressure	kPag	170	7	7	121	121	7
Molar Flow	kgmole/h	18	1	0	19	28	2
Mass Flow	kg/h	321	81	18	1,616	3,314	99
Heat Flow	kW	-1,148	-47	-15	-952	-1,930	-62
Molecular Weight		18.0	60.9	39.5	86.0	119.1	55.5
Vapour Phase							
Mass Flow	kg/h	321	81	18	123	---	99
Mass Density	kg/m3	1.0	2.3	1.6	5.6	---	2.1
Molar Flow	kgmole/h	18	1	0	2	---	2
Actual Volume Flow	m3/h	311	35	11	22	---	47
Standard Gas Flow	Sm3/h	422	32	11	43	---	42
Mass Heat Capacity	kJ/kg-C	2.02	1.87	1.85	1.84	---	1.87
Thermal Conductivity	W/m-K	0.0436	0.0211	0.0245	0.0190	---	0.0219
Mass Enthalpy	kJ/kg	-12853	-2066	-3140	-1983	---	-2258
Heat Flow	kW	-1,148	-47	-15	-68	---	-62
Viscosity	cP	0.0202	0.0090	0.0104	0.0083	---	0.0094
Molecular Weight		18.0	60.9	39.5	68.3	---	55.5
Z Factor		0.993	0.980	0.990	0.946	---	0.983
Cp/Cv (Real)		1.307	1.085	1.134	1.087	---	1.093
Liquid Phase							
Volume Flow Std conditions	Sm3/h	---	---	---	2.14	4.40	---
Actual Volume Flow	m3/h	---	---	---	2.3	4.6	---
Mass Flow	kg/h	---	---	---	1493	3314	---
Mass Density	kg/m3	---	---	---	645.2	717.8	---
Molar Flow	kgmole/h	---	---	---	17	28	---
Mass Heat Capacity	kJ/kg-C	---	---	---	2.25	2.04	---
Thermal Conductivity	W/m-K	---	---	---	0.097	0.107	---
Mass Enthalpy	kJ/kg	---	---	---	-2131	-2097	---
Heat Flow	kW	---	---	---	-884	-1930	---
Viscosity	cP	---	---	---	0.180	0.321	---
Surface Tension	dyne/cm	---	---	---	13.56	18.84	---
Molecular Weight		---	---	---	87.9	119.1	---
Aqueous Phase							
Mass Flow	kg/h	---	---	---	---	---	---
Mass Density	kg/m3	---	---	---	---	---	---
Molar Flow	kgmole/h	---	---	---	---	---	---
Actual Volume Flow	m3/h	---	---	---	---	---	---
Mass Heat Capacity	kJ/kg-C	---	---	---	---	---	---
Thermal Conductivity	W/m-K	---	---	---	---	---	---
Mass Enthalpy	kJ/kg	---	---	---	---	---	---
Heat Flow	kW	---	---	---	---	---	---
Viscosity	cP	---	---	---	---	---	---
Surface Tension	dyne/cm	---	---	---	---	---	---

Name		4000	4001	4002	4003	4004	4005
Description							
Stream Properties							
---Combined Stream---	Units						
Vapour Fraction		0.000	0.000	0.000	1.000	0.000	0.000
Temperature	C	57.5	57.3	32.8	32.2	28.0	51.7
Pressure	kPag	39	800	1250	376	500	497
Molar Flow	kgmole/h	113	23	1	1	20	20
Mass Flow	kg/h	2,041	406	67	32	556	556
Heat Flow	kW	-8,903	-1,769	-47	-24	-1,782	-1,769
Molecular Weight		18.0	18.0	70.9	38.4	27.9	27.9
Vapour Phase							
Mass Flow	kg/h	---	---	---	32	---	---
Mass Density	kg/m3	---	---	---	7.6	---	---
Molar Flow	kgmole/h	---	---	---	1	---	---
Actual Volume Flow	m3/h	---	---	---	4	---	---
Standard Gas Flow	Sm3/h	---	---	---	20	---	---
Mass Heat Capacity	kJ/kg-C	---	---	---	1.84	---	---
Thermal Conductivity	W/m-K	---	---	---	0.0224	---	---
Mass Enthalpy	kJ/kg	---	---	---	-2699	---	---
Heat Flow	kW	---	---	---	-24	---	---
Viscosity	cP	---	---	---	0.0097	---	---
Molecular Weight		---	---	---	38.4	---	---
Z Factor		---	---	---	0.945	---	---
Cp/Cv (Real)		---	---	---	1.169	---	---
Liquid Phase							
Volume Flow Std conditions	Sm3/h	---	---	0.10	0.00	---	---
Actual Volume Flow	m3/h	---	---	0.1	0.0	---	---
Mass Flow	kg/h	---	---	66	0	---	---
Mass Density	kg/m3	---	---	638.1	623.2	---	---
Molar Flow	kgmole/h	---	---	1	0	---	---
Mass Heat Capacity	kJ/kg-C	---	---	2.17	2.22	---	---
Thermal Conductivity	W/m-K	---	---	0.099	0.098	---	---
Mass Enthalpy	kJ/kg	---	---	-2333	-2370	---	---
Heat Flow	kW	---	---	-43	0	---	---
Viscosity	cP	---	---	0.198	0.186	---	---
Surface Tension	dyne/cm	---	---	14.14	13.44	---	---
Molecular Weight		---	---	74.1	70.5	---	---
Aqueous Phase							
Mass Flow	kg/h	2041	406	1	0	556	556
Mass Density	kg/m3	982.4	982.8	1001.8	1002.0	1066.4	1047.1
Molar Flow	kgmole/h	113.3	22.5	0.1	0.0	19.9	19.9
Actual Volume Flow	m3/h	2.1	0.4	0.0	0.0	0.5	0.5
Mass Heat Capacity	kJ/kg-C	4.33	4.33	4.31	4.31	3.39	3.46
Thermal Conductivity	W/m-K	0.651	0.651	0.622	0.621	0.406	0.422
Mass Enthalpy	kJ/kg	-15702	-15702	-15807	-15811	-11544	-11463
Heat Flow	kW	-8903	-1769	-4	0	-1782	-1769
Viscosity	cP	0.482	0.483	0.751	0.761	2.376	1.421
Surface Tension	dyne/cm	66.4	66.4	70.7	70.8	58.7	55.7

Name		5711
Description		
Stream Properties		
---Combined Stream---	Units	
Vapour Fraction		0.000
Temperature	C	-8.8
Pressure	kPag	816
Molar Flow	kgmole/h	72
Mass Flow	kg/h	11,548
Heat Flow	kW	-7,065
Molecular Weight		160.0
Vapour Phase		
Mass Flow	kg/h	---
Mass Density	kg/m3	---
Molar Flow	kgmole/h	---
Actual Volume Flow	m3/h	---
Standard Gas Flow	Sm3/h	---
Mass Heat Capacity	kJ/kg-C	---
Thermal Conductivity	W/m-K	---
Mass Enthalpy	kJ/kg	---
Heat Flow	kW	---
Viscosity	cP	---
Molecular Weight		---
Z Factor		---
Cp/Cv (Real)		---
Liquid Phase		
Volume Flow Std conditions	Sm3/h	14.42
Actual Volume Flow	m3/h	14.1
Mass Flow	kg/h	11548
Mass Density	kg/m3	819.9
Molar Flow	kgmole/h	72
Mass Heat Capacity	kJ/kg-C	1.68
Thermal Conductivity	W/m-K	0.118
Mass Enthalpy	kJ/kg	-2202
Heat Flow	kW	-7065
Viscosity	cP	2.548
Surface Tension	dyne/cm	26.11
Molecular Weight		160.0
Aqueous Phase		
Mass Flow	kg/h	---
Mass Density	kg/m3	---
Molar Flow	kgmole/h	---
Actual Volume Flow	m3/h	---
Mass Heat Capacity	kJ/kg-C	---
Thermal Conductivity	W/m-K	---
Mass Enthalpy	kJ/kg	---
Heat Flow	kW	---
Viscosity	cP	---
Surface Tension	dyne/cm	---

[redacted]

OPPSD Protected Piping Summary Calculations

[redacted]

[redacted]

[redacted]

Service Description:
Crude feed from Sales Oil Tank (T-0601A) feeds the Crude Feed Pumps (P-0202A/B) and are then pumped to Crude Fractionation Unit 390.

Upset Condition:
Liquid level in the Sales Oil Tank is at LAHH conditions, the Storage Tank is operating at atmospheric pressure and the Crude Feed Pumps are in operation.

Design Parameters:

Maximum Operating Pressure	7	kPag	
Liquid Height (from skid)	12.00	m	
Pump Suction Centerline (from skid)	0.90	m	
Pump Head at Shutoff Conditions	924.7	kPag	(Rated Impeller)
Liquid SG	0.82		
Safety Margin	0.0	kPag (buffer)	

Calculations:

Liquid Height Above Pump Centerline 11.10 m

Minimum MAWP Pump Piping
= [Upstream Equipment MAWP, kPag] + [Safety Margin, kPag] + [Liquid Height, m]*[Liquid SG]*9.81+[Pump Shutoff Head, kPag]

= 1021 kPag

MAWP of System Protected by OPPSD

= 1724 kPag

Conclusion:

The MAWP of the pump system at 1724 kPag is sufficiently protected against overpressure by system design during an upset condition.

References:
P-0220A/B Pump Curve

This document contains confidential and proprietary information and shall not be used without the expressed written permission of Thermo Design Engineering Ltd.
APEGA Permit P2800

[redacted]

Curve:

Temperature: -10 °C

Specific Speeds: nq: 8.71
S: 155

Search Criteria:

Flow:	18.1 m³/hr	Near Miss:	1% of Head
Head:	112.1 m	Static Head:	0 m

Pump Limits:

Temperature:	---	Sphere Size:	11.1 mm
Wkg Pressure:	---		

Motor:

Standard:	NEMA	Size:	15 kW
Enclosure:	TEFC	Speed:	3600 rpm
Frame:	256T		
Sizing Criteria:	Max Power on Design Curve		

Pump Selection Warnings:

None

--- Duty Point ---	
Flow:	18.1 m³/hr
Head:	112 m
Eff:	41.8%
Power:	10.8 kW
NPSHr:	1.43 m
Speed:	3560 rpm
--- Design Curve ---	
Shutoff Head:	115 m
Shutoff dP:	924 kPa
Min Flow:	7.95 m³/hr
BEP: 50.1% @ 31.8 m³/hr	
NOL Power:	
13.9 kW @ 33.2 m³/hr	
--- Max Curve ---	
Max Power:	
21.4 kW @ 38.2 m³/hr	

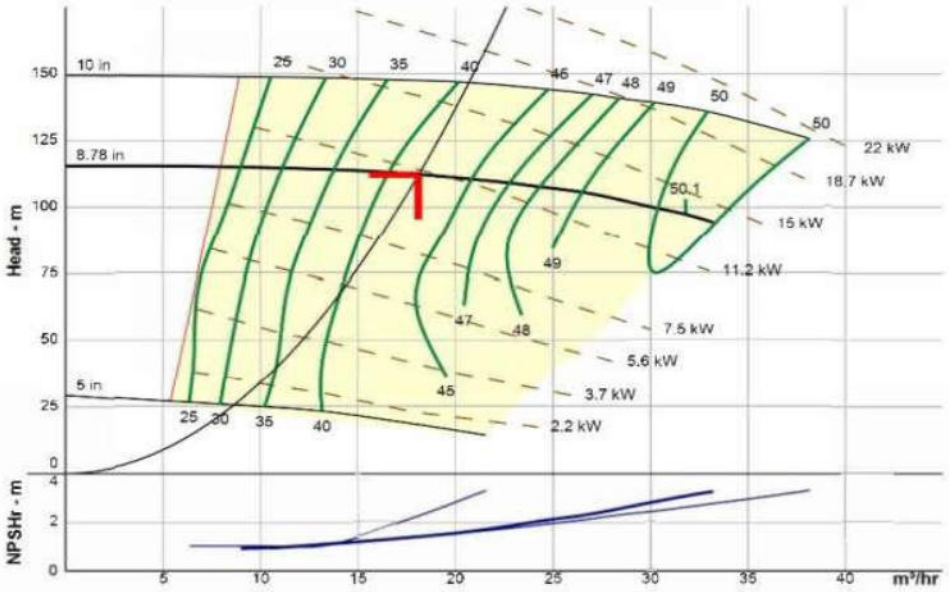

This document contains confidential and proprietary information and shall not be used without the expressed written permission of Thermo Design Engineering Ltd.

APEGA Permit P2800

[redacted]

Line Numbers:
3"-PL-BL3-39013-25H
3"-PL-BL3-39014-25H
3"-PL-BL3-39015-25H

Service Description:
Liquids from Flash Drum (V-0235) feed the Fractionator Feed Pumps (P-0235A/B) and are then pumped to Fractionator Feed/Residue Exchanger E-0235.

Upset Condition:
Liquid level in the Flash Drum is at LAHH conditions, the Flash Drum is at PSV-0235 setpoint of 758 kPag and the Fractionator Feed Pumps are in operation.

Design Parameters:

Maximum Operating Pressure	758	kPag	
Liquid Height (from skid)	3.14	m	
Pump Suction Centerline (from skid)	0.60	m	
Pump Head at Shutoff Conditions	687	kPag	(Rated Impeller)
Liquid SG	0.67		
Safety Margin	0.0	kPag (buffer)	

Calculations:

Liquid Height Above Pump Centerline 2.54 m

Minimum MAWP Pump Piping
= [Upstream Equipment MAWP, kPag] + [Safety Margin, kPag] + [Liquid Height, m]*[Liquid SG]*9.81+[Pump Shutoff Head, kPag]

= 1461 kPag

MAWP of System Protected by OPPSD

= 1724 kPag

Conclusion:

The MAWP of the pump system at 1724 kPag is sufficiently protected against overpressure by system design during an upset condition.

References:
P-0235A/B Pump Curve

This document contains confidential and proprietary information and shall not be used without the expressed written permission of Thermo Design Engineering Ltd.
APEGA Permit P2800

REFERENCE: P-2040A/B

DATE: AUGUST 30, 2019

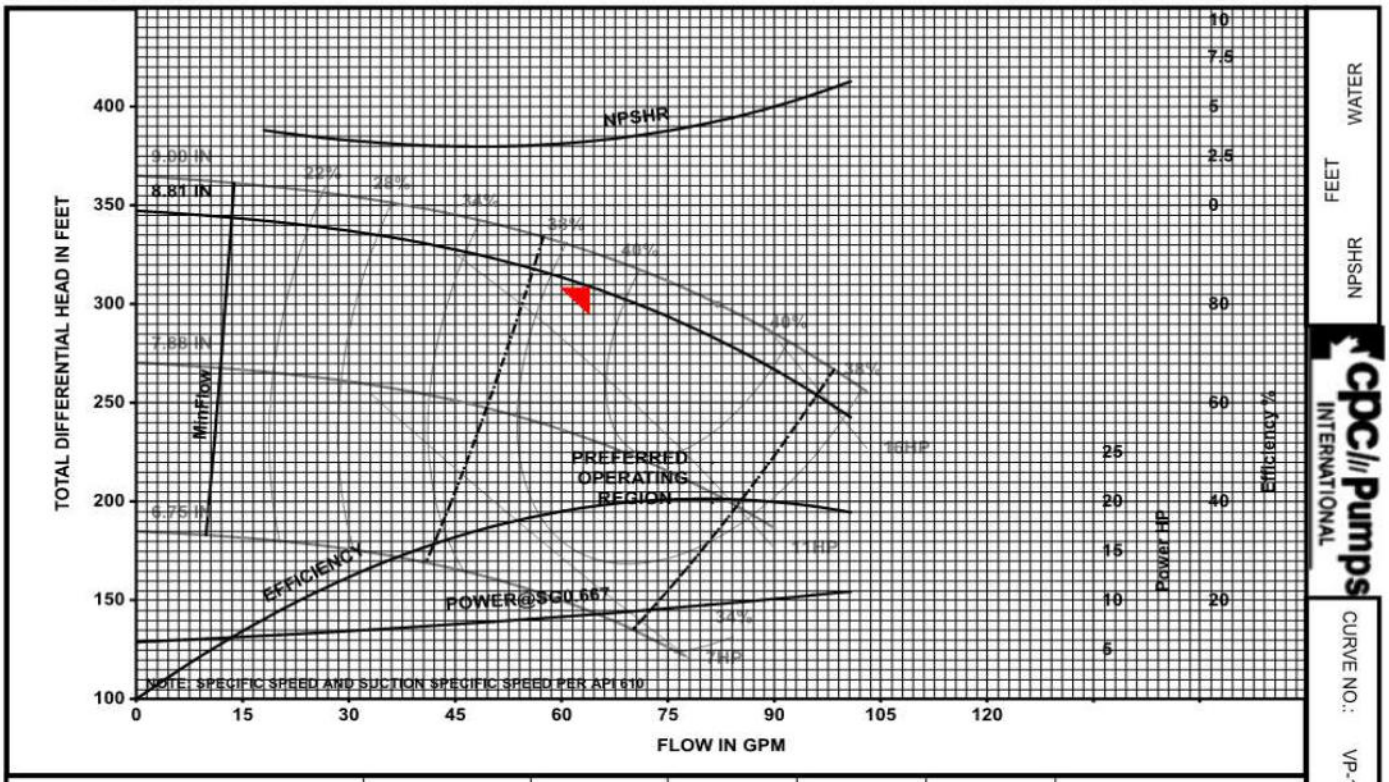

MAX PART SIZE 0.125 IN	NS: 445	CREATED 06.29.16	IMPELLER 21328	VOLUTE 50321	PATTERN 50321	PUMP SIZE AND TYPE G1X2X9VP	
WET WR² 140 LBS-IN²	SS: 10800			3SV9.25		RPM 3550	
SERVICE: REFRACTIONATOR BOTTOMS PUMPS		CAPACITY: 64.1 GPM		HEAD: 308.58 FT		NPSHA: Ample FT	
SG: 0.667 VISC: 0.353 cP	EFFY(%): 39	POWER: 8.55 HP		EOC POWER: 10.9 HP		NPSHR: 3.25 FT	

This document contains confidential and proprietary information and shall not be used without the expressed written permission of Thermo Design Engineering Ltd.

APEGA Permit P2800

[redacted]

Line Numbers:
3"-PL-BT0-39042-50ET
3"-PL-BT0-39043-50ET

Service Description:
Liquids from Crude Fractionator (T-0240) feed the Atmospheric Crude Pumps (P-0240A/B) and are then pumped to storage after passing through the pre-heat exchanger train.

Upset Condition:
Liquid level in the Crude Fractionator is at LAHH conditions, the Crude Fractionator is at PSV-0240 setpoint. and the Atmospheric Crude Pumps are in operation.

Design Parameters:

Maximum Operating Pressure	758	kPag	
Liquid Height (from skid)	3.76	m	
Pump Suction Centerline (from skid)	0.55	m	
Pump Head at Shutoff Conditions	365.8	kPag	(Rated Impeller)
Liquid SG	0.67		
Safety Margin	0.0	kPag (buffer)	

Calculations:

Liquid Height Above Pump Centerline	3.21	m

Minimum MAWP Pump Piping
= [Upstream Equipment MAWP, kPag] + [Safety Margin, kPag] + [Liquid Height, m]*[Liquid SG]*9.81+[Pump Shutoff Head, kPag]

= 1144 kPag

MAWP of System Protected by OPPSD

= 1379 kPag

Conclusion:

The MAWP of the pump system at 1379 kPag is sufficiently protected against overpressure by system design during an upset condition.

References:
P-0240A/B Pump Curve

This document contains confidential and proprietary information and shall not be used without the expressed written permission of Thermo Design Engineering Ltd.
APEGA Permit P2800

P-0240A/B Pump Curve

REFERENCE: P-2100A/B

DATE: AUGUST 16, 2019

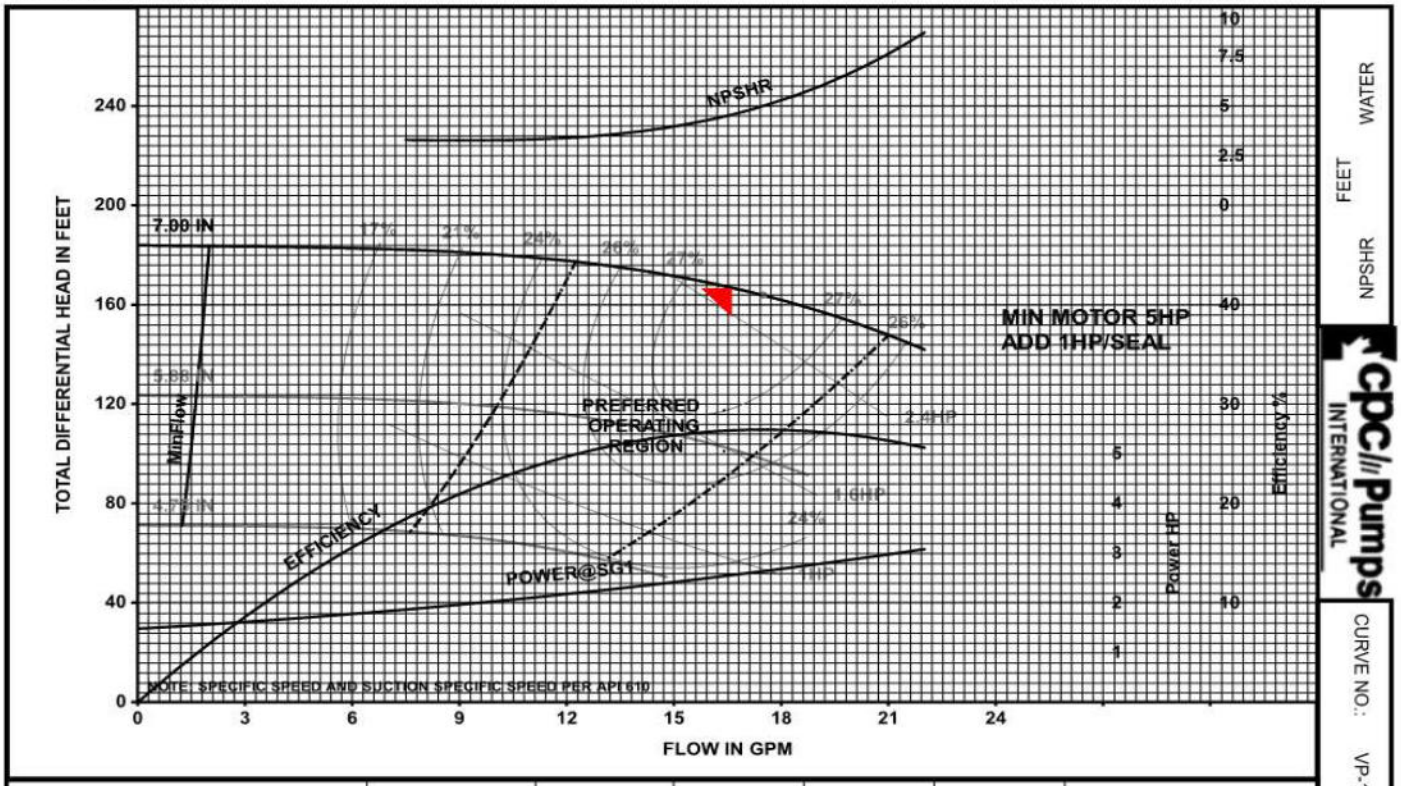

MAX PART SIZE 0.094 IN	NS: 320	CREATED 08,24,09	IMPELLER FAB.	VOLUTE 1083V	PATTERN 2284A	PUMP SIZE AND TYPE S1.5X3X7VP
WET WR² 60 LBS-IN²	SS: 4400					RPM 3530
SERVICE: RESIDUE PRODUCT PUMP		CAPACITY: 16.6 GPM		HEAD: 166.6 FT		NPSHA: Ample FT
SG: 0.665 VISC: 0.512 cP	EFFY(%): 27.4	POWER: 2.55 HP		EOC POWER: 3.08 HP		NPSHR: 4.57 FT

This document contains confidential and proprietary information and shall not be used without the expressed written permission of Thermo Design Engineering Ltd.

APEGA Permit P2800

[redacted]

Line Numbers:
3"-PL-AO3-39020-25ET
3"-PL-AO3-39021-N

Service Description:
Liquids from Fractionator Reflux Drum (V-0255) feed the Fractionator Reflux Pumps (P-0255A/B) and are then pumped as reflux back to the Fractionator Tower (T-0240) and to combine with Naphtha from Prefractionator to storage.

Upset Condition:
Liquid level in the Fractionator Reflux Drum is at LAHH conditions, the Fractionator Reflux Drum is at PSV-0255 setpoint and the Fractionator Reflux Pumps are in operation.

Design Parameters:

Maximum Operating Pressure	758	kPag	
Liquid Height (from skid)	6.00	m	
Pump Suction Centerline (from skid)	0.60	m	
Pump Head at Shutoff Conditions	348.2	kPag	(Rated Impeller)
Liquid SG	0.68		
Safety Margin	0.0	kPag (buffer)	

Calculations:

Liquid Height Above Pump Centerline 5.40 m

Minimum MAWP Pump Piping
= [Upstream Equipment MAWP, kPag] + [Safety Margin, kPag] + [Liquid Height, m]*[Liquid SG]*9.81+[Pump Shutoff Head, kPag]

= 1142 kPag

MAWP of System Protected by OPPSD

= 1586 kPag

Conclusion:

The MAWP of the pump system at 1586 kPag is sufficiently protected against overpressure by system design during an upset condition.

References:
P-0255A/B Pump Curve

This document contains confidential and proprietary information and shall not be used without the expressed written permission of Thermo Design Engineering Ltd.
APEGA Permit P2800

P-0255A/B Pump Curve

REFERENCE: P-2060A/B

DATE: AUGUST 16, 2019

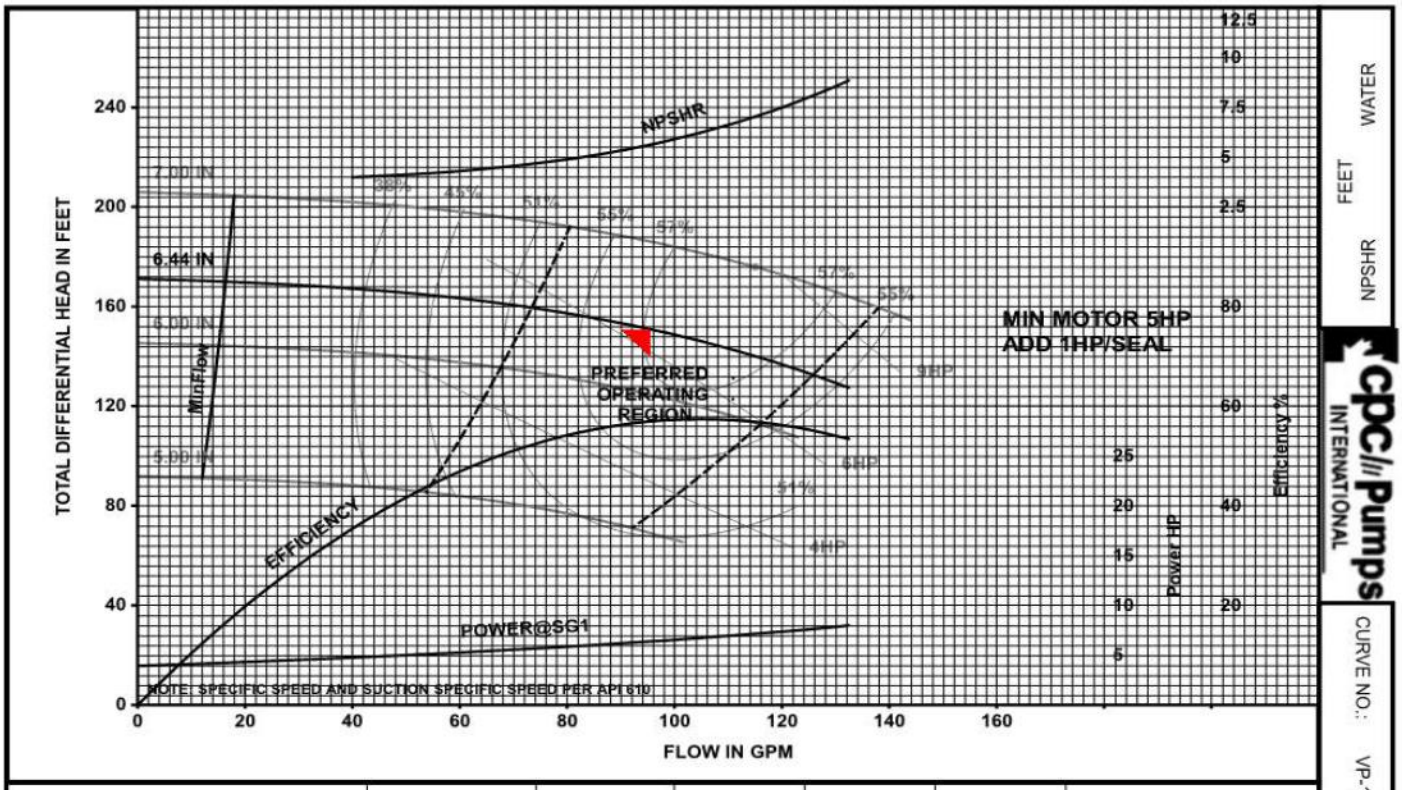

MAX PART SIZE 0.125 IN		NS: 790	CREATED 06.08.10 11.29.12	IMPELLER 20879	VOLUTE 1083 5S0.71V7.25	PATTERN 2284	PUMP SIZE AND TYPE H1.5X3X7VP
WET WR² 60	LBS-IN²	SS: 8800					RPM 3550
SERVICE: FRACTIONATOR REFLUX PUMP			CAPACITY: 95.5 GPM		HEAD: 150.8 FT		NPSHA: Ample FT
SG: 0.677	VISC: 0.292 cP	EFFY(%): 57	POWER: 6.39 HP		EOC POWER: 7.98 HP		NPSHR: 5.63 FT

This document contains confidential and proprietary information and shall not be used without the expressed written permission of Thermo Design Engineering Ltd.

APEGA Permit P2800

[redacted]

Line Numbers:
3"-PL-BL3-39035-40ET
3"-PL-BL3-39036-40ET
2"-PL-BL3-39037-40H

Service Description:
Liquids from Diesel Stripper (T-0245) feed the Diesel Pumps (P-0245A/B) and are then pumped to storage after passing through pre-heat exchanger and air cooler.

Upset Condition:
Liquid level in the Diesel Stripper is at LAHH conditions, the Crude Fractionator is at PSV-0240 set point and the Diesel Product Pumps are in operation.

Design Parameters:

Maximum Operating Pressure	758	kPag	
Liquid Height (from skid)	4.57	m	
Pump Suction Centerline (from skid)	0.60	m	
Pump Head at Shutoff Conditions	281.3	kPag	(Rated Impeller)
Liquid SG	0.64		
Safety Margin	0.0	kPag (buffer)	

Calculations:

Liquid Height Above Pump Centerline	3.97	m

Minimum MAWP Pump Piping
= [Upstream Equipment MAWP, kPag] + [Safety Margin, kPag] + [Liquid Height, m]*[Liquid SG]*9.81+[Pump Shutoff Head, kPag]

= 1064 kPag

MAWP of System Protected by OPPSD

= 1379 kPag

Conclusion:

The MAWP of the pump system at 1379 kPag is sufficiently protected against overpressure by system design during an upset condition.

References:
P-0245A/B Pump Curve

This document contains confidential and proprietary information and shall not be used without the expressed written permission of Thermo Design Engineering Ltd.
APEGA Permit P2800

P-0245A/B Pump Curve

REFERENCE: P-2080A/B

DATE: AUGUST 16, 2019

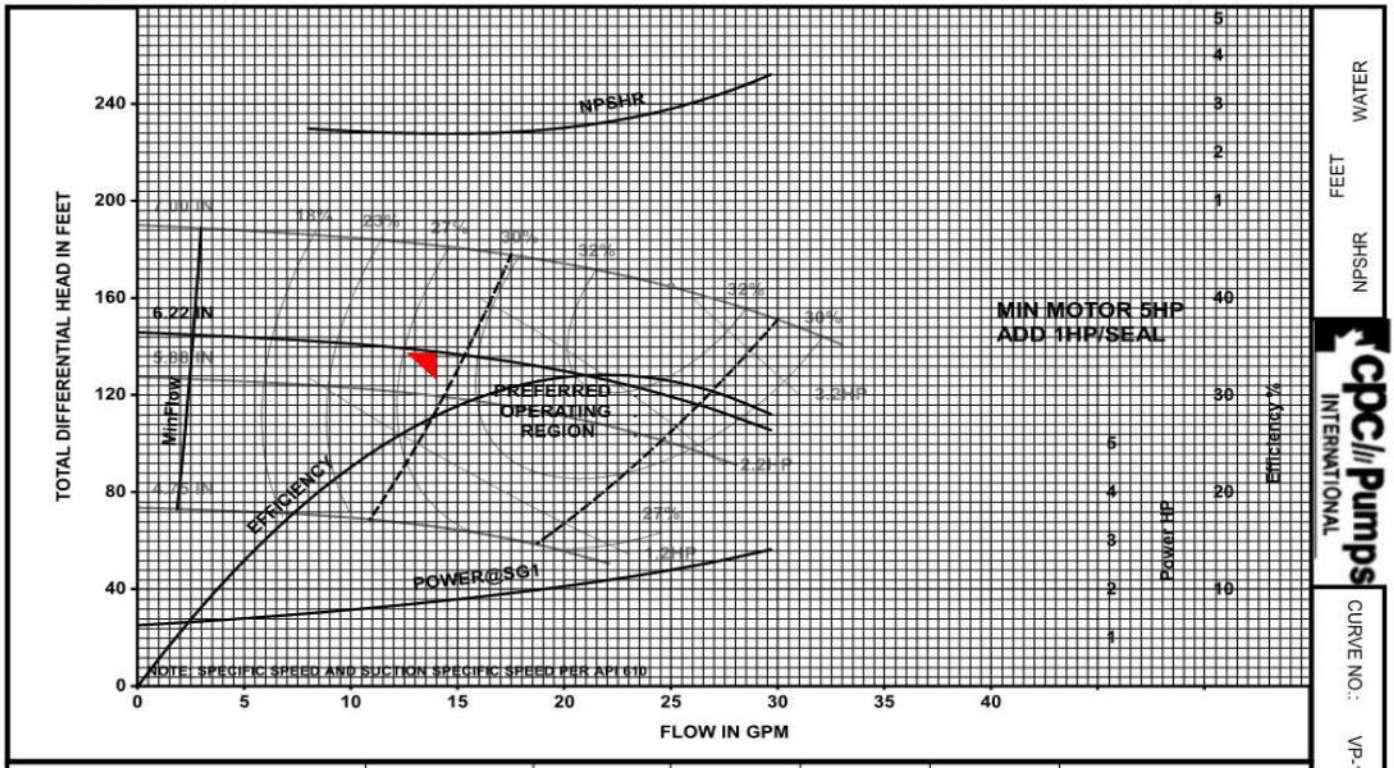

MAX PART SIZE 0.125 IN	NS: 380	CREATED 11.05.13	IMPELLER 21076FAB	VOLUTE 2230V	PATTERN 2230A	PUMP SIZE AND TYPE S1X1.5X7VP	
WET WR² 60 LBS-IN²	SS: 7800					RPM 3480	
SERVICE: DIESEL PRODUCT PUMP		CAPACITY: 14 GPM		HEAD: 137.8 FT		NPSHA: Ample FT	
SG: 0.641 VISC: 0.295 cP	EFFY(%): 27.9	POWER: 1.75 HP		EOC POWER: 2.82 HP		NPSHR: 2.39 FT	

This document contains confidential and proprietary information and shall not be used without the expressed written permission of Thermo Design Engineering Ltd.

APEGA Permit P2800

[redacted]

Line Numbers:
3"-PL-BL3-39027-25ET
3"-PL-BL3-39028-25ET
2"-PL-BL3-39029-25H

Service Description:
Liquids from Kerosene Stripper (T-0250) feed the Kerosene Pumps (P-0250A/B) and are then pumped to storage after passing through pre-heat exchanger and air cooler.

Upset Condition:
Liquid level in the Kerosene Stripper is at LAHH conditions, the Crude Fractionator is at PSV-0240 set point and the Kerosene Product Pumps are in operation.

Design Parameters:

Maximum Operating Pressure	758	kPag	
Liquid Height (from skid)	4.57	m	
Pump Suction Centerline (from skid)	0.60	m	
Pump Head at Shutoff Conditions	1123	kPag	(Rated Impeller)
Liquid SG	0.66		
Safety Margin	0.0	kPag (buffer)	

Calculations:

Liquid Height Above Pump Centerline	3.97	m

Minimum MAWP Pump Piping
= [Upstream Equipment MAWP, kPag] + [Safety Margin, kPag] + [Liquid Height, m]*[Liquid SG]*9.81+[Pump Shutoff Head, kPag]

= 1906 kPag

MAWP of System Protected by OPPSD

= 2276 kPag

Conclusion:

The MAWP of the pump system at 2276 kPag is sufficiently protected against overpressure by system design during an upset condition.

References:
P-0250A/B Pump Curve

This document contains confidential and proprietary information and shall not be used without the expressed written permission of Thermo Design Engineering Ltd.
APEGA Permit P2800

P-0250A/B Pump Curve

REFERENCE: P-2070A/B

DATE: AUGUST 16, 2019

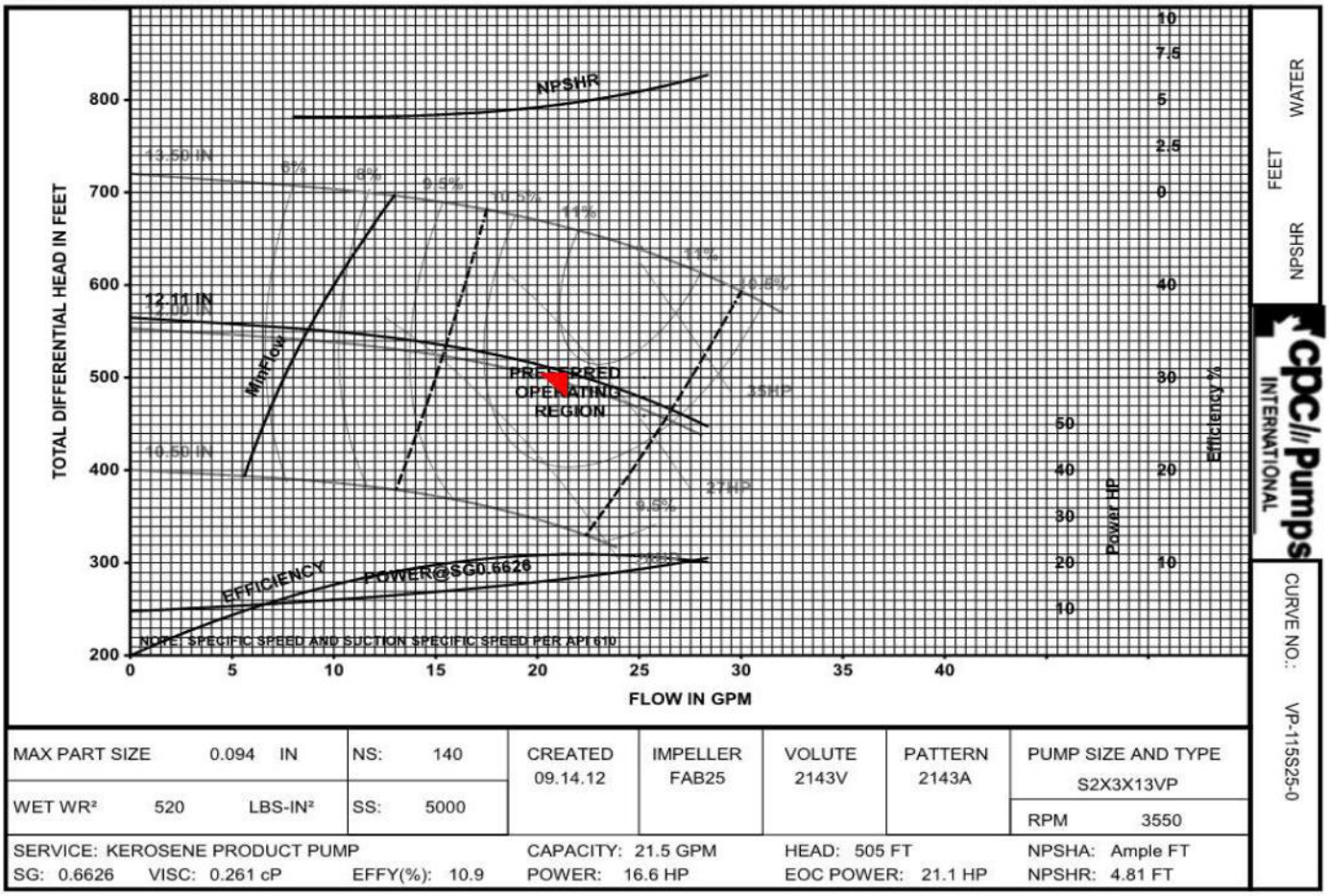

MAX PART SIZE 0.094 IN		NS: 140	CREATED 09.14.12	IMPELLER FAB25	VOLUTE 2143V	PATTERN 2143A	PUMP SIZE AND TYPE S2X3X13VP
WET WR² 520 LBS-IN²		SS: 5000					RPM 3550
SERVICE: KEROSENE PRODUCT PUMP			CAPACITY: 21.5 GPM		HEAD: 505 FT		NPSHA: Ample FT
SG: 0.6626	VISC: 0.261 cP	EFFY(%): 10.9	POWER: 16.6 HP		EOC POWER: 21.1 HP		NPSHR: 4.81 FT

This document contains confidential and proprietary information and shall not be used without the expressed written permission of Thermo Design Engineering Ltd.

APEGA Permit P2800

[redacted]

Overpressure Risk Assessment Summary



[redacted]

0A	Mar 23, 202	Issued for Use (TW19GP0001)	SJ	SE	AR
0	Mar 3, 2020	Issued for Use (TW19GP0001)	SJ	SE	AR
Rev.	**Issue Date**	**Purpose of Issue**	**Prepared**	**Checked**	**Approved**

This document contains confidential and proprietary information and shall not be used without the expressed written permission of Thermo Design Engineering Ltd.

APEGA Permit P2800

[redacted]

TABLE OF CONTENTS:

EVALUATION TEAM..... 3
DESIGN BASIS..... 3
PRESSURE RELIEF SYSTEM..... 4
COINCIDENT RELIEF..... 4
CONCLUSIONS..... 4
PRESSURE RELIEF VALVE LIST..... 5
SUMMARY OF DESIGN CONDITIONS AT SYSTEM BOUNDARIES..... 6

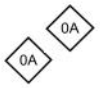

DEVICE SUMMARIES:

PSV-0220 7
PSV-0221 8
PSV-0222 9
PSV-0225 10
PSV-0226 11
PSV-0230 12
PSV-0231 13
PSV-0235 14
PSV-0236 15
PSV-0237 16
PSV-0240 17
PSV-0241 18
PSV-0255 19
PSV-0260/0261 20

[redacted]

EVALUATION TEAM:

System Design Assessment by : Steve Jackson - Senior Process Engineer
Design Reviewed by: Sameh Esmail - Process Engineering Manager

DESIGN BASIS:

The overpressure risk assessment has been performed by evaluating potential overpressure scenarios for all pressure envelopes outlined in the following P&ID packages:

- CSA-390-PR-PI-0001 to 0017
- CSA-570-PR-PI-0001 to 0002
- CSA-800-PR-PI-0001 to 0007

Using API 521 as a guideline, all potential sources of overprerssure have been reviewed by the team and scenarios deemed applicable to the corresponding pressure envelope were selected for evaluation in sizing the associated pressure relief valve. In evaluating potential overpressure scenarios, consideration has been given to off-design operation such as start-up, shutdown, plant upset, fire, operator error, instrument failure, amongst others.

Pressure relief valves are located on each isolatable pressure envelope with the exception of systems covered under Overpressure Protection by System Design (OPPSD). For reference to systems protected under OPPSD, please reference *OPPSD Protected Piping Summary Calculations: CSA-000-PI-CC-0002* .

Once the appropriate sizing scenarios were selected for each pressure relief valve, sizing calculations were prepared in order to determine the most stringent sizing requirement. The scenario resulting in the largest required orifice area have been considered in selecting the appropriate orifice designation.

Sizing results for each scenario considered can be found in the individual device summaries found in the Device Summaries section of this report.

Upon completion of the ORA, sizing results were detailed on the P&IDs and the overall system design was further reviewed in a Hazard and Operability workshop (HAZOP). Three independent HAZOP's were conducted to review the current design with the results outlined in the following reports:

- Brazeau River Complex Crude Topping Plant - HAZOP Report: TID-20006PHA

Any recommendations for design modification or further evaluation stemming from the HAZOP have been incorporated into the current design and are reflected in this ORA report.

[redacted]

PRESSURE RELIEF SYSTEM: 0A

The plant pressure relief network including PSV tailpipes, flare subheaders, and main flare headers have been modelled utilizing Aspen HYSYS process modelling software. Individual PSV tailpipes have been sized based on single source relief from the associated pressure relief valve. Tailpipe sizes have been selected in order to ensure compliance with PSV back pressure, tailpipe velocty, and tailpipe ρV^2 limitations.

The overall flare system has been sized based on limiting the maximum backpressure at any point in the flare network to the following:

Maximum Allowable Flare System Backpressure = 100 kPag

On this basis the following PSV selection criteria has been implemented:

Conventional: PSV Set Pressure >= 1000 kPag (limiting backpressure to less than 10% of set pressure)
Bellows: PSV Set Pressure < 1000 kPag (limiting backpressure to less than 40% of set pressure)
Pilot: Not applicable on this project

Coincident Pressure Relief 0A

As part of the flare system evaluation, a review of all potential coincident pressure relief events have been investigated and taken into consideration in determining the appropraite flare network sizing requirements. The following sizing scenarios involving coincident relief from multiple PSV's have been identified:

1. Fire Zone Pressure Relief

Fire zone identification based on API 521 recommendation of fire zones confined to 232 m^2.

Maximum Flare System Backpressure: 52 kPag (occuring on discharge of PSV-0255)

CONCLUSIONS:

All pressure envelopes within the scope of this report have been reviewed and the Overpressure Risk Assessment has been completed. The system design considers OPPSD protection for several of the piping systems with the remainder of the piping and vessels protected from overpressure by an appropriately sized pressure relief device.

Further details can be found in the Device Summaries section of this report in addition to the OPPSD Protected Piping Summary Calculations: CSA-000-PI-CC-0002.

[redacted]

PRESSURE SAFETY VALVE LIST

#	TAG	REFERENCE DRAWING	SET PRES. (kPag)	Selected Orifice (in^2)	Protected Equipment
1	PSV-0220	CSA-390-PR-PI-0001	1034	0.567 in² (G)	- Feed/Kerosene Exchanger (TS)
2	PSV-0221	CSA-390-PR-PI-0001	2276	0.887 in² (H)	- Feed/Kerosene Exchanger (SS)
3	PSV-0222	CSA-390-PR-PI-0001	1724	0.084 in² (5)	- Crude Feed Header Piping
4	PSV-0225	CSA-390-PR-PI-0002	1379	0.347 in² (F)	- Feed/Residue Exchanger (TS) - Fractionator Feed/Residue Exchanger (TS) - Steam Superheater (TS)
5	PSV-0226	CSA-390-PR-PI-0002	1034	1.453 in² (J)	- Feed/Residue Exchanger (SS)
6	PSV-0230	CSA-390-PR-PI-0003	1034	0.567 in² (G)	- Feed/Diesel Exchanger (TS)
7	PSV-0231	CSA-390-PR-PI-0003	1379	0.567 in² (G)	- Feed/Diesel Exchanger (SS)
8	PSV-0235	CSA-390-PR-PI-0004	758	2.076 in² (K)	- Fractionator Flash Drum
9	PSV-0236	CSA-390-PR-PI-0005	1724	0.887 in² (H)	- Fractionator Feed/Residue Exchanger (SS)
10	PSV-0237	CSA-390-PR-PI-0006	1724	0.887 in² (H)	- Crude Feed Heater
11	PSV-0240	CSA-390-PR-PI-0007	758	3.221 in² (L)	- Crude Fractionator
12	PSV-0241	CSA-390-PR-PI-0013	862	0.887 in² (H)	- Steam Superheater (SS)
13	PSV-0255	CSA-390-PR-PI-0010	758	1.453 in² (J)	- Fractionator Reflux Drum
14	PSV-0260/0261	CSA-390-PR-PI-0011	1724	0.196 in² (8)	- Fractionator Produced Water Pumps
15					
16					
17					
18					
19					
20					
21					
22					
23					
24					
25					
26					
27					
28					
29					
30					
31					
32					
33					
34					
35					
36					
37					
38					
39					
40					
41					
42					
43					
44					
45					

[redacted]

SUMMARY OF DESIGN CONDITIONS AT SYSTEM BOUNDARIES

The following table outlines system design conditions for piping being connected to existing piping networks (brownfield installation) or with piping networks as designed by an alternate vendor falling outside the current overpressure risk assessment.

#	SYSTEM DESCRIPTION	SYSTEM DESIGN PRESSURE - PRESENT SCOPE AS EVALUATED IN CURRENT ORA (kPag)	SYSTEM DESIGN PRESSURE - EXISTING SYSTEM OR ALTERNATE VENDOR SCOPE (kPag)	REFERENCE P&ID	TIE-POINT #	COMMENTS
1	Flare	350	350	CSA-800-PR-PI-0001	TP-8001	
2	Closed Drain	350	350	CSA-800-PR-PI-0002	TP-8002	
3	Instrument Air	1110	1110	CSA-800-PR-PI-0003	TP-8003	
4	LP Fuel Gas	1034	1034	CSA-800-PR-PI-0004	TP-8004	
5	Cooling Glycol	827	827	CSA-800-PR-PI-0005	TP-8005 TP-8006	
6	Heat Medium	1378	1378	CSA-800-PR-PI-0006	TP-8007 TP-8008	
7	Low Pressure Steam	862	862	CSA-800-PR-PI-0007	TP-8008	
8	From Crude Feed Pump	1724	1724	CSA-390-PR-PI-0001	TP-3901	
9	Feed to Prefractionator	1034	1034	CSA-390-PR-PI-0003	TP-3902	
10	Feed to Fractionator Flash Drum	1034	1034	CSA-390-PR-PI-0004	TP-3903	
11	Naphtha from Prefractionator	1586	1586	CSA-390-PR-PI-0010	TP-3904	
12	Sour Water to Flash Vessel	1724	1034	CSA-390-PR-PI-0011	TP-3905	Downstream piping system protected by PSV on Sour Water Flash Vessel set @ 1034 kPag
13	Naphtha to Storage	1586	1586	CSA-390-PR-PI-0014	TP-3907	
14	Kerosene to Storage	2276	2276	CSA-390-PR-PI-0014	TP-3908	
15	Diesel to Storage	1379	1379	CSA-390-PR-PI-0014	TP-3909	
16	Off-Gas from Prefractionator	1034	1034	CSA-390-PR-PI-0015	TP-3910	
17	NGL to Stabilizer	1724	1724	CSA-390-PR-PI-0015	TP-3912	
18	Instrument Air	1110	1110	CSA-570-PR-PI-0001	TP-5701	
19	Minimum Flow Recycle	1724	1376	CSA-570-PR-PI-0001	TP-5703	Downstream piping system protected by PVRV / EPRV on Storage Tank.
20	Crude Feed Pump Inlet	1034	1034	CSA-570-PR-PI-0001	TP-5704	
21	Crude Feed Pump Outlet	1724	1791	CSA-570-PR-PI-0001	TP-5706	PSV-0222 protects this header from overpresure and is set at 1724 kPag.
22	Instrument Air	1110	1110	CSA-570-PR-PI-0002	TP-5707	
23	Diesel to Metering	1379	1379	CSA-570-PR-PI-0002	TP-5708	
24	Kerosene to Metering	2276	2276	CSA-570-PR-PI-0002	TP-5709	
25	Naphtha to Metering	1586	1586	CSA-570-PR-PI-0002	TP-5710	
26	Diesel to Storage	1379	1379	CSA-570-PR-PI-0002	TP-5711	
27	Kerosene to Storage	1034	1034	CSA-570-PR-PI-0002	TP-5712	
28	Naphtha to Storage	1586	1586	CSA-570-PR-PI-0002	TP-5713	
29	Off-Spec to Sales Oil Tank	1586	1586	CSA-570-PR-PI-0002	TP-5714	
30						
31						
32						
33						
34						
35						

NOTES:	
1	Design conditions at interface points for existing equipment are referenced from client Line List 19GP0001-LDT-001
2	
3	
4	
5	
6	
7	

[redacted]

Device Tag: **PSV-0220**
Reference Drawing CSA-390-PR-PI-0001
Set Pressure (kPag): 1034
Selected Orifice (in^2) 0.567 in^2 (G)
Protected Equipment: - Feed/Kerosene Exchanger (TS)

	Applicable Scenario	Required Orifice Size (in^2)	Sizing Case	Comments
Closed Outlets				
Reflux Failure				
Accumulation of Non Condensables				
Entrance of Highly Volatile Material				
Overfilling				
Failure of Automatic Controls				
Abnormal Heat Input				
Check Valve Failure				
Thermal Expansion				
Fire	X	0.147		- Inadequate fire protection considered
Tube Rupture	X	0.398	X	- Sizing based on SS of exchanger at design pressure.
Power Failure				
Series Fractionation				
Maintenance				
Contamination				

[redacted]

Device Tag: **PSV-0221**
Reference Drawing CSA-390-PR-PI-0001
Set Pressure (kPag): 2276
Selected Orifice (in^2) 0.887 in^2 (H)
Protected Equipment: - Feed/Kerosene Exchanger (SS)

	Applicable Scenario	Required Orifice Size (in^2)	Sizing Case	Comments
Closed Outlets				
Reflux Failure				
Accumulation of Non Condensables				
Entrance of Highly Volatile Material				
Overfilling				
Failure of Automatic Controls				
Abnormal Heat Input				
Check Valve Failure				
Thermal Expansion				
Fire	X	0.583	X	- Inadequate fire protection considered
Tube Rupture				
Power Failure				
Series Fractionation				
Maintenance				
Contamination				

[redacted]

Set Pressure (kPag): 1724
Selected Orifice (in^2) 0.084 in^2 (5)
Protected Equipment: - Crude Feed Header Piping

	Applicable Scenario	Required Orifice Size (in^2)	Sizing Case	Comments
Closed Outlets				
Reflux Failure				
Accumulation of Non Condensables				
Entrance of Highly Volatile Material				
Overfilling				
Failure of Automatic Controls				
Abnormal Heat Input				
Check Valve Failure				
Thermal Expansion	X	6.20E-05	X	For protection of piping header when system is isolated for maintenance.
Fire				
Tube Rupture				
Power Failure				
Series Fractionation				
Maintenance				
Contamination				

[redacted]

Device Tag: **PSV-0225**
Reference Drawing CSA-390-PR-PI-0002
Set Pressure (kPag): 1379
Selected Orifice (in^2) 0.347 in^2 (F)
Protected Equipment:
- Feed/Residue Exchanger (TS)
- Fractionator Feed/Residue Exchanger (TS)
- Steam Superheater (TS)

	Applicable Scenario	Required Orifice Size (in^2)	Sizing Case	Comments
Closed Outlets				
Reflux Failure				
Accumulation of Non Condensables				
Entrance of Highly Volatile Material				
Overfilling				
Failure of Automatic Controls				
Abnormal Heat Input				
Check Valve Failure				
Thermal Expansion				
Fire	X	0.250	X	- Inadequate fire protection considered
Tube Rupture				
Power Failure				
Series Fractionation				
Maintenance				
Contamination				

[redacted]

Device Tag: **PSV-0226**
Reference Drawing CSA-390-PR-PI-0001
Set Pressure (kPag): 1034
Selected Orifice (in^2) 1.453 in^2 (J)
Protected Equipment: - Feed/Residue Exchanger (SS)

	Applicable Scenario	Required Orifice Size (in^2)	Sizing Case	Comments
Closed Outlets				
Reflux Failure				
Accumulation of Non Condensables				
Entrance of Highly Volatile Material				
Overfilling				
Failure of Automatic Controls				
Abnormal Heat Input				
Check Valve Failure				
Thermal Expansion				
Fire	X	1.170	X	- Inadequate fire protection considered
Tube Rupture	X	0.295		- Considers TS of exchanger at PSV set
Power Failure				
Series Fractionation				
Maintenance				
Contamination				

[redacted]

Device Tag: **PSV-0230**
Reference Drawing CSA-390-PR-PI-0003
Set Pressure (kPag): 1034
Selected Orifice (in^2) 0.567 in^2 (G)
Protected Equipment: - Feed/Diesel Exchanger (TS)

	Applicable Scenario	Required Orifice Size (in^2)	Sizing Case	Comments
Closed Outlets				
Reflux Failure				
Accumulation of Non Condensables				
Entrance of Highly Volatile Material				
Overfilling				
Failure of Automatic Controls				
Abnormal Heat Input				
Check Valve Failure				
Thermal Expansion				
Fire	X	0.182		- Inadequate fire protection considered
Tube Rupture	X	0.183	X	- Considers SS of exchanger at PSV set
Power Failure				
Series Fractionation				
Maintenance				
Contamination				

[redacted]

Device Tag: **PSV-0231**
Reference Drawing CSA-390-PR-PI-0003
Set Pressure (kPag): 1379
Selected Orifice (in^2) 0.567 in^2 (G)
Protected Equipment: - Feed/Diesel Exchanger (SS)

	Applicable Scenario	Required Orifice Size (in^2)	Sizing Case	Comments
Closed Outlets				
Reflux Failure				
Accumulation of Non Condensables				
Entrance of Highly Volatile Material				
Overfilling				
Failure of Automatic Controls				
Abnormal Heat Input				
Check Valve Failure				
Thermal Expansion				
Fire	X	0.410	X	- Inadequate fire protection considered
Tube Rupture				
Power Failure				
Series Fractionation				
Maintenance				
Contamination				

[redacted]

Device Tag: **PSV-0235**
Reference Drawing CSA-390-PR-PI-0004
Set Pressure (kPag): 758
Selected Orifice (in^2) 2.076 in^2 (K)
Protected Equipment: - Fractionator Flash Drum

	Applicable Scenario	Required Orifice Size (in^2)	Sizing Case	Comments
Closed Outlets				
Reflux Failure				
Accumulation of Non Condensables				
Entrance of Highly Volatile Material				
Overfilling				
Failure of Automatic Controls	X	0.298		- Scenario is based on PV-3221 falied open. - No credit taken for relief through PV-3209
Abnormal Heat Input				
Check Valve Failure				
Thermal Expansion				
Fire	X	1.425		- Inadequate fire protection considered
Tube Rupture				
Power Failure				
Series Fractionation				
Maintenance				
Contamination				

[redacted]

Device Tag: **PSV-0236**
Reference Drawing CSA-390-PR-PI-0005
Set Pressure (kPag): 1724
Selected Orifice (in^2) 0.887 in^2 (H)
Protected Equipment: - Fractionator Feed/Residue Exchanger (SS)

	Applicable Scenario	Required Orifice Size (in^2)	Sizing Case	Comments
Closed Outlets				
Reflux Failure				
Accumulation of Non Condensables				
Entrance of Highly Volatile Material				
Overfilling				
Failure of Automatic Controls				
Abnormal Heat Input				
Check Valve Failure				
Thermal Expansion				
Fire	X	0.644	X	- Inadequate fire protection considered
Tube Rupture				
Power Failure				
Series Fractionation				
Maintenance				
Contamination				

[redacted]

Device Tag: **PSV-0237**
Reference Drawing CSA-390-PR-PI-0006
Set Pressure (kPag): 1724
Selected Orifice (in^2) 0.887 in^2 (H)
Protected Equipment: - Crude Feed Heater

	Applicable Scenario	Required Orifice Size (in^2)	Sizing Case	Comments
Closed Outlets	X	0.785	X	- Sizing based on blocked in fired heater resulting in vapour relief through PSV.
Reflux Failure				
Accumulation of Non Condensables				
Entrance of Highly Volatile Material				
Overfilling				
Failure of Automatic Controls				
Abnormal Heat Input				
Check Valve Failure				
Thermal Expansion				
Fire				
Tube Rupture				
Power Failure				
Series Fractionation				
Maintenance				
Contamination				

[redacted]

Device Tag: **PSV-0240**
Reference Drawing CSA-390-PR-PI-0007
Set Pressure (kPag): 758
Selected Orifice (in^2) 3.221 in^2 (L)
Protected Equipment: - Crude Fractionator

	Applicable Scenario	Required Orifice Size (in^2)	Sizing Case	Comments
Closed Outlets	X	1.570		- Scenario considers relief of all fluid coming from Crude Feed Heater. - No credit is taken for cooling of fluid through reflux condenser (more stringent case than reflux failure. - No credit taken for any of the control valves in the system evacuating any of the incoming mass flow (worst case scenario).
Reflux Failure				
Accumulation of Non Condensables				
Entrance of Highly Volatile Material				
Overfilling				
Failure of Automatic Controls				
Abnormal Heat Input				
Check Valve Failure				
Thermal Expansion				
Fire	X	2.060		- Inadequate fire protection considered
Tube Rupture				
Power Failure				
Series Fractionation				
Maintenance				
Contamination				

[redacted]

Device Tag: **PSV-0241**
Reference Drawing CSA-390-PR-PI-0013
Set Pressure (kPag): 862
Selected Orifice (in^2) 0.887 in^2 (H)
Protected Equipment: - Steam Superheater (SS)

	Applicable Scenario	Required Orifice Size (in^2)	Sizing Case	Comments
Closed Outlets				
Reflux Failure				
Accumulation of Non Condensables				
Entrance of Highly Volatile Material				
Overfilling				
Failure of Automatic Controls				
Abnormal Heat Input				
Check Valve Failure				
Thermal Expansion				
Fire	X	0.018		- Inadequate fire protection considered
Tube Rupture	X	0.434	X	- Based on TS of exchanger at design pressure.
Power Failure				
Series Fractionation				
Maintenance				
Contamination				

[redacted]

Device Tag: **PSV-0255**
Reference Drawing CSA-390-PR-PI-0010
Set Pressure (kPag): 758
Selected Orifice (in^2) 1.453 in^2 (J)
Protected Equipment: - Fractionator Reflux Drum

	Applicable Scenario	Required Orifice Size (in^2)	Sizing Case	Comments
Closed Outlets				
Reflux Failure				
Accumulation of Non Condensables				
Entrance of Highly Volatile Material				
Overfilling				
Failure of Automatic Controls	X	0.298		- Scenario is based on PV-3222 falied open. - No credit taken for relief through PV-3218
Abnormal Heat Input				
Check Valve Failure				
Thermal Expansion				
Fire	X	1.208	X	- Inadequate fire protection considered
Tube Rupture				
Power Failure				
Series Fractionation				
Maintenance				
Contamination				

[redacted]

Device Tag: **PSV-0260/0261**
Reference Drawing CSA-390-PR-PI-0011
Set Pressure (kPag): 1724
Selected Orifice (in^2) 0.196 in^2 (8)
Protected Equipment: - Fractionator Produced Water Pumps

	Applicable Scenario	Required Orifice Size (in^2)	Sizing Case	Comments
Closed Outlets	X	0.034	X	-Sizing based on blocked outlet on discharge of PD pumps.
Reflux Failure				
Accumulation of Non Condensables				
Entrance of Highly Volatile Material				
Overfilling				
Failure of Automatic Controls				
Abnormal Heat Input				
Check Valve Failure				
Thermal Expansion				
Fire				
Tube Rupture				
Power Failure				
Series Fractionation				
Maintenance				
Contamination				

[redacted] *Midstream and Infrastructure Ltd.*

Revamp of BRC Plant 1 Stabilizer to Crude Fractionation

Piping Line List

[redacted]ment Number.:	Rev.:	Release Date:	Revision Comment:		Process:	Mechanical:	Project:
[redacted]-000-PI-LI-0001	0B	04/07/2020	Issued for Construction				

LINE NUMBER IDENTIFICATION

Line Size (NPS) / Fluid Service / Piping Class / Line Number / External Finish

3" - PL - BR1 - 00001-50ET

50 ET: Thickness / Type

FLUID SERVICE

PG	Process Gas	HM	Heat Medium	FH	High Pressure Flare Header
PL	Process Liquid	UH	Utility Heat Medium	FL	Low Pressure Flare Header
AM	Amine	LO	Lube Oil	FC	Cryogenic Flare Header
AG	Acid Gas	ME	Methanol	AV	Atmospheric Vent
GL	Glycol	HY	Hydrogen	DC	Closed Drain
RF	Refrigerant	CE	Chemical	DO	Open Drain
AO	Ammonia	CA	Caustic	SH	High Pressure Steam
FG	Fuel Gas	UW	Utility Water	CH	High Pressure Condensate
DI	Diesel	PW	Produced Water	SM	Medium Pressure Steam
IA	Instrument Air	FW	Fire Water	CM	Medium Pressure Condensate
PA	Plant Air	PO	Potable Water	SL	Low Pressure Steam
NI	Nitrogen	DW	Demineralized Water	CL	Low Pressure Condensate

PIPING CLASS

FLANGE RATING / MATERIAL SPECIFICATION / CORROSION ALLOWANCE

BR 1

FLANGE RATING

A	ASME Class 150 RF
B	ASME Class 300 RF
C	ASME Class 600 RF
D	ASME Class 900 RF
E	ASME Class 1500 RTJ
F	ASME Class 2500 RTJ
G	ASME Class 600 RTJ
H	ASME Class 900 RTJ

MATERIAL OF CONSTRUCTION

R	Carbon Steel, Reg Temp, Sweet Service
L	Carbon Steel, Low Temp, Sweet Service
N	Carbon Steel, Reg Temp, Sour Service
O	Carbon Steel, Low Temp, Sour Service
S	304 Stainless Steel, Sweet Service
T	316 Stainless Steel, Sweet Service
J	304 Stainless Steel, Sour Service
K	316 Stainless Steel, Sour Service
G	Carbon Steel, Low Temp, Galvanized
C	304 Stainless Steel, Cryogenic Service
D	316 Stainless Steel, Cryogenic Service

CORROSION ALLOWANCE

0	None
1	1.6 mm (1/16")
3	3.2 mm (1/8")
6	6.35 mm (1/4")

PROFESSIONAL ENGINEER ZORAN KOJIC ALBERTA

C	Cold Insulation
PP	Personnel Protection
ET	Electric Traced
HT	Heat Medium Traced
ST	Steam Traced
A	Acoustic

P&ID Document Number	Nominal Pipe Size Inches	Fluid Service Code	Piping Class	Line Number	Insulation mm Thk.	Insulation Type	Routing From	Routing To	Operating Conditions Pres. kPag	Operating Conditions Temp. °C	Design Conditions Pres. kPag	Design Conditions Temp. °C	Design Conditions MDMT °C	Hydrostatic Test Pressure kPag	Hydrostatic Test Medium	ANSI Class	Pipe Schedule	Corrosion Allowance mm	Material of Construction	NACE	X-Ray	PWHT	Design Code	Paint Spec	Finish Color	Stress Analysis Required	ABSA AB-525 Require	Comments
CSA-390-PR-PI-0001	3"	PL	AO3	39001		N	SK-231 Skid Edge	E-0220 Exchanger	862	33	1034	130	-40	2940	Water	150# RF	STD	3.2mm	Low Temp. CS	Yes	100%	Yes	B31.3	U-0	Standard Grey	No	No	
CSA-390-PR-PI-0001/2	3"	PL	AO3	39002	25	H	E-0220 Exchanger	E-0225A/B Exchanger	717	42	1034	130	-40	2940	Water	150# RF	STD	3.2mm	Low Temp. CS	Yes	100%	Yes	B31.3	I-0	Standard Grey	No	No	
CSA-390-PR-PI-0002/3	3"	PL	AO3	39003	25	H	E-0225A/B Exchanger	E-0230 Exchanger	707	72	1034	130	-40	2940	Water	150# RF	STD	3.2mm	Low Temp. CS	Yes	100%	Yes	B31.3	I-0	Standard Grey	No	No	
CSA-390-PR-PI-0003	3"	PL	AO3	39004	25	H	E-0230 Exchanger	T-0201 Prefractionator	695	107	1034	130	-40	2940	Water	150# RF	STD	3.2mm	Low Temp. CS	Yes	100%	Yes	B31.3	I-0	Standard Grey	No	No	
CSA-390-PR-PI-0004	3"	PL	AL3	39005	40	H	T-0201 Prefractionator	V-0235 Flash Drum	241	210	1034	268	-40	2940	Water	150# RF	STD	3.2mm	Low Temp. CS	No	5%	No	B31.3	I-0	Standard Grey	Yes	No	
CSA-390-PR-PI-0004	3"	PL	AL3	39006	25	H	AL3/BL3 Spec Break	V-0235 Flash Drum	241	210	758	268	-40	2940	Water	150# RF	STD	3.2mm	Low Temp. CS	No	5%	No	B31.3	I-0	Standard Grey	Yes	No	
CSA-390-PR-PI-0004/10	2"	PL	AL1	39007	25	PP	Naphtha Make-Up	AL1/AL3 Spec Break	544	83	1586	93	-40	2940	Water	150# RF	XS	1.6mm	Low Temp. CS	No	5%	No	B31.3	I-0	Standard Grey	No	No	
CSA-390-PR-PI-0004	2"	PL	AL3	39008	25	PP	AL1/AL3 Spec Break	V-0235 Flash Drum	241	83	758	268	-40	2940	Water	150# RF	XS	3.2mm	Low Temp. CS	No	5%	No	B31.3	I-0	Standard Grey	Yes	No	
CSA-390-PR-PI-0004	4"	PG	AL3	39009	25	PP	V-0235 Flash Drum	PSV-0235 Inlet	241	210	758	268	-40	2940	Water	150# RF	STD	3.2mm	Low Temp. CS	No	5%	No	B31.3	I-0	Standard Grey	Yes	No	
CSA-390-PR-PI-0004	4"	PG	AL3	39010	25	H	V-0235 Flash Drum	PV-3209	241	210	758	268	-40	2940	Water	150# RF	STD	3.2mm	Low Temp. CS	No	5%	No	B31.3	I-0	Standard Grey	Yes	No	
CSA-390-PR-PI-0004/7	4"	PG	AL3	39011	25	H	PV-3209	T-0240 Fractionator Tower	48	208	758	268	-40	2940	Water	150# RF	STD	3.2mm	Low Temp. CS	No	5%	No	B31.3	I-0	Standard Grey	Yes	No	
CSA-390-PR-PI-0004	3"	PL	AL3	39012	25	H	V-0235 Flash Drum	AL3/BL3 Spec Break	241	210	758	268	-40	2940	Water	150# RF	STD	3.2mm	Low Temp. CS	No	5%	No	B31.3	I-0	Standard Grey	Yes	No	
CSA-390-PR-PI-0004	3"	PL	BL3	39013	25	H	AL3/BL3 Spec Break	P-0235A Pump Suction	241	210	1724	268	-40	7665	Water	300# RF	XS	3.2mm	Low Temp. CS	No	5%	No	B31.3	I-0	Standard Grey	Yes	Yes	
CSA-390-PR-PI-0004	3"	PL	BL3	39014	25	H	AL3/BL3 Spec Break	P-0235B Pump Suction	241	210	1724	268	-40	7665	Water	300# RF	XS	3.2mm	Low Temp. CS	No	5%	No	B31.3	I-0	Standard Grey	Yes	Yes	
CSA-390-PR-PI-0004/5	3"	PL	BL3	39015	25	H	P-0235A/B Pump Discharge	E-0235 Exchanger	870	210	1724	268	-40	7665	Water	300# RF	XS	3.2mm	Low Temp. CS	No	5%	No	B31.3	I-0	Standard Grey	Yes	Yes	
CSA-390-PR-PI-0005/6	3"	PL	BL3	39016	25	H	E-0235 Exchanger	H-0235 Crude Heater	863	219	1724	268	-40	7665	Water	300# RF	XS	3.2mm	Low Temp. CS	No	5%	No	B31.3	I-0	Standard Grey	Yes	No	
◆ CSA-390-PR-PI-0006/7	6"	PL	BP3	39017	65	H	H-0235 Crude Heater	ESDV-9210	221	357	1724	399	-29	7755	Water	300# RF	XS	3.2mm	Chrome Moly, 9 Cr - 1 Mo	Yes	100%	Yes	B31.3	I-4	Standard Grey	Yes	No	
CSA-390-PR-PI-0007/9	10"	PG	AO3	39018	50	H	T-0240 Fractionator Tower	AC-0255 Condenser	39	140	758	204	-40	2940	Water	150# RF	STD	3.2mm	Low Temp. CS	Yes	100%	Yes	B31.3	I-0	Standard Grey	Yes	No	
CSA-390-PR-PI-0009/10	6"	PL	AO3	39019	40	ET	AC-0255 Condenser	V-0255 Reflux Drum	26	57	758	93	-40	2940	Water	150# RF	STD	3.2mm	Low Temp. CS	Yes	100%	Yes	B31.3	I-0	Standard Grey	Yes	No	
CSA-390-PR-PI-0010	3"	PL	AO3	39020	25	ET	V-0255 Reflux Drum	P-0255A/B Pump Suction	26	57	1586	93	-40	2940	Water	150# RF	STD	3.2mm	Low Temp. CS	Yes	100%	Yes	B31.3	I-0	Standard Grey	Yes	Yes	
CSA-390-PR-PI-0010	3"	PL	AO3	39021		N	P-0255A/B Pump Discharge	Check Valve	366	58	1586	93	-40	2940	Water	150# RF	STD	3.2mm	Low Temp. CS	Yes	100%	Yes	B31.3	U-0	Standard Grey	Yes	Yes	
CSA-390-PR-PI-0010/14	3"	PL	AO3	39022		N	Check Valve	AC-0260 Naphtha Cooler	75	67	1586	93	-40	2940	Water	150# RF	STD	3.2mm	Low Temp. CS	Yes	100%	Yes	B31.3	U-0	Standard Grey	No	No	
CSA-390-PR-PI-0014	3"	PL	AL3	39023		N	SK-231 Skid Edge	XV-9215	54	43	1586	93	-40	2940	Water	150# RF	STD	3.2mm	Low Temp. CS	No	5%	No	B31.3	U-0	Standard Grey	No	No	
CSA-390-PR-PI-0007/8	4"	PL	AL3	39024	25	H	T-0240 Frac. Tower	T-0250 Kerosene Stripper	170	210	758	232	-40	2940	Water	150# RF	STD	3.2mm	Low Temp. CS	No	5%	No	B31.3	I-0	Standard Grey	Yes	No	
CSA-390-PR-PI-0007/8	3"	PG	AL3	39025	25	H	T-0250 Kerosene Stripper	T-0240 Fract. Tower	53	203	758	232	-40	2940	Water	150# RF	STD	3.2mm	Low Temp. CS	No	5%	No	B31.3	I-0	Standard Grey	Yes	No	
CSA-390-PR-PI-0008	3"	PL	AL3	39026	25	ET	T-0250 Kerosene Stripper	AL3/BL3 Spec Break	53	195	758	232	-40	2940	Water	150# RF	STD	3.2mm	Low Temp. CS	No	5%	No	B31.3	I-0	Standard Grey	Yes	No	
CSA-390-PR-PI-0008	3"	PL	BL3	39027	25	ET	AL3/BL3 Spec Break	P-0250A Pump Suction	53	195	2276	232	-40	7665	Water	300# RF	XS	3.2mm	Low Temp. CS	No	5%	No	B31.3	I-0	Standard Grey	Yes	Yes	
CSA-390-PR-PI-0008	3"	PL	BL3	39028	25	ET	AL3/BL3 Spec Break	P-0250B Pump Suction	53	195	2276	232	-40	7665	Water	300# RF	XS	3.2mm	Low Temp. CS	No	5%	No	B31.3	I-0	Standard Grey	Yes	Yes	
CSA-390-PR-PI-0001/8	2"	PL	BL3	39029	25	H	P-0250A/B Pump Discharge	E-0220 Exchanger	1103	200	2276	232	-40	7665	Water	300# RF	XS	3.2mm	Low Temp. CS	No	5%	No	B31.3	I-0	Standard Grey	Yes	Yes	
CSA-390-PR-PI-0001/14	2"	PL	BL3	39030	25	H	E-0220 Exchanger	AC-0250 Kerosene Cooler	1080	175	2276	232	-40	7665	Water	300# RF	XS	3.2mm	Low Temp. CS	No	5%	No	B31.3	I-0	Standard Grey	Yes	No	
CSA-390-PR-PI-0014	2"	PL	BL3	39031		N	AC-0250 Kerosene Cooler	XV-9213	1030	43	2276	93	-40	7665	Water	300# RF	XS	3.2mm	Low Temp. CS	No	5%	No	B31.3	U-0	Standard Grey	No	No	
CSA-390-PR-PI-0007/8	3"	PL	AL3	39032	40	H	T-0240 Fractionator Tower	T-0245 Diesel Stripper	78	316	758	343	-40	2940	Water	150# RF	STD	3.2mm	Low Temp. CS	No	5%	No	B31.3	I-4	Standard Grey	Yes	No	

This document is the property of Thermo Design Engineering Ltd. Any unauthorised attempt to reproduce it, in any form, is strictly prohibited.

[redacted]

[redacted]

ent Number.:	Rev.:	Release Date:	Revision Comment:		Process:	Mechanical:	Project:
00-PI-LI-0001	0B	04/07/2020	Issued for Construction				

LINE NUMBER IDENTIFICATION

3" - PL - BR1 - 00001-S0ET
- 3" = Line Size (NPS)
- PL = Fluid Service
- BR1 = Piping Class
- 00001 = Line Number
- S0 = External Finish
- ET = Thickness / Type

FLUID SERVICE

PG	Process Gas	HM	Heat Medium	FH	High Pressure Flare Header
PL	Process Liquid	UH	Utility Heat Medium	FL	Low Pressure Flare Header
AM	Amine	LO	Lube Oil	FC	Cryogenic Flare Header
AG	Acid Gas	ME	Methanol	AV	Atmospheric Vent
GL	Glycol	HY	Hydrogen	DC	Closed Drain
RF	Refrigerant	CE	Chemical	DO	Open Drain
AO	Ammonia	CA	Caustic	SH	High Pressure Steam
FG	Fuel Gas	UW	Utility Water	CH	High Pressure Condensate
DI	Diesel	PW	Produced Water	SM	Medium Pressure Steam
IA	Instrument Air	FW	Fire Water	CM	Medium Pressure Condensate
PA	Plant Air	PO	Potable Water	SL	Low Pressure Steam
NI	Nitrogen	DW	Demineralized Water	CL	Low Pressure Condensate

PIPING CLASS

BR1
- BR = FLANGE RATING
- 1 = MATERIAL SPECIFICATION / CORROSION ALLOWANCE

FLANGE RATING

A	ASME Class 150 RF
B	ASME Class 300 RF
C	ASME Class 600 RF
D	ASME Class 900 RF
E	ASME Class 1500 RTJ
F	ASME Class 2500 RTJ
G	ASME Class 600 RTJ
H	ASME Class 900 RTJ

MATERIAL OF CONSTRUCTION

R	Carbon Steel, Reg Temp, Sweet Service
L	Carbon Steel, Low Temp, Sweet Service
N	Carbon Steel, Reg Temp, Sour Service
O	Carbon Steel, Low Temp, Sour Service
S	304 Stainless Steel, Sweet Service
T	316 Stainless Steel, Sweet Service
J	304 Stainless Steel, Sour Service
K	316 Stainless Steel, Sour Service
G	Carbon Steel, Low Temp, Galvanized
C	304 Stainless Steel, Cryogenic Service
D	316 Stainless Steel, Cryogenic Service

CORROSION ALLOWANCE

0	None
1	1.6 mm (1/16")
3	3.2 mm (1/8")
6	6.35 mm (1/4")

EXTERNAL FINISH

N	None
H	Hot Insulation
C	Cold Insulation
PP	Personnel Protection
ET	Electric Traced
HT	Heat Medium Traced
ST	Steam Traced
A	Acoustic

	P&ID Document Number	Nominal Pipe Size Inches	Fluid Service Code	Piping Class	Line Number	Insulation mm Thk.	Insulation Type	Routing From	Routing To	Operating Conditions Pres. kPag	Operating Conditions Temp. °C	Design Conditions Pres. kPag	Design Conditions Temp. °C	Design Conditions MDMT °C	Hydrostatic Test Pressure kPag	Hydrostatic Test Medium	ANSI Class	Pipe Schedule	Corrosion Allowance mm	Material of Construction	NACE	X-Ray	PWHT	Design Code	Paint Spec	Finish Color	Stress Analysis Required	ABSA AB-525 Required	Comments
	CSA-390-PR-PI-0007/8	3"	PG	AL3	39033	40	H	T-0245 Diesel Stripper	T-0240 Fractionator Tower	78	308	758	343	-40	2940	Water	150# RF	STD	3.2mm	Low Temp. CS	No	5%	No	B31.3	I-4	Standard Grey	Yes	No	
	CSA-390-PR-PI-0008	3"	PL	AL3	39034	40	ET	T-0245 Diesel Stripper	AL3/BL3 Spec Break	78	303	758	343	-40	2940	Water	150# RF	STD	3.2mm	Low Temp. CS	No	5%	No	B31.3	I-4	Standard Grey	Yes	No	
	CSA-390-PR-PI-0008	3"	PL	BL3	39035	40	ET	AL3/BL3 Spec Break	P-0245A Pump Suction	78	303	1379	343	-40	7665	Water	300# RF	XS	3.2mm	Low Temp. CS	No	5%	No	B31.3	I-4	Standard Grey	Yes	Yes	
	CSA-390-PR-PI-0008	3"	PL	BL3	39036	40	ET	AL3/BL3 Spec Break	P-0245B Pump Suction	78	303	1379	343	-40	7665	Water	300# RF	XS	3.2mm	Low Temp. CS	No	5%	No	B31.3	I-4	Standard Grey	Yes	Yes	
	CSA-390-PR-PI-0003/8	2"	PL	BL3	39037	40	H	P-0245A/B Pump Discharge	E-0230 Exchanger	354	303	1379	343	-40	7665	Water	300# RF	XS	3.2mm	Low Temp. CS	No	5%	No	B31.3	I-4	Standard Grey	Yes	Yes	
	CSA-390-PR-PI-0003/14	2"	PL	BL3	39038	25	H	E-0230 Exchanger	AC-0245 Diesel Cooler	353	99	1379	343	-40	7665	Water	300# RF	XS	3.2mm	Low Temp. CS	No	5%	No	B31.3	I-0	Standard Grey	Yes	No	
	CSA-390-PR-PI-0014	2"	PL	AL3	39039		N	AC-0245 Diesel Cooler	XV-9211	303	43	1379	93	-40	2940	Water	150# RF	XS	3.2mm	Low Temp. CS	No	5%	No	B31.3	U-0	Standard Grey	No	No	
	CSA-390-PR-PI-0007/8	2"	PL	BL3	39040	40	H	P-0245A/B Pump Disch.	T-0240 Fractionator Tower	354	303	1379	343	-40	7665	Water	300# RF	XS	3.2mm	Low Temp. CS	No	5%	No	B31.3	I-4	Standard Grey	Yes	No	
	CSA-390-PR-PI-0010	2"	PL	AO3	39041	25	PP	T-0201 Prefractionator	Combined Naphtha Stream	75	67	1586	93	-40	2940	Water	150# RF	XS	3.2mm	Low Temp. CS	Yes	100%	Yes	B31.3	I-0	Standard Grey	No	No	
	CSA-390-PR-PI-0007/12	3"	PL	BT0	39042	50	ET	T-0240 Fractionator Tower	P-0240A/B Pump Suction	124	316	1379	399	-40	7440	Water	300# RF	40S	0.0mm	316/316L SS	No	5%	No	B31.3	N/A	N/A	Yes	Yes	
	CSA-390-PR-PI-0012/13	3"	PL	BT0	39043	50	ET	P-0240A/B Pump Disch.	E-0240 Steam Superheater	503	317	1379	399	-40	7440	Water	300# RF	40S	0.0mm	316/316L SS	No	5%	No	B31.3	N/A	N/A	Yes	Yes	
	CSA-390-PR-PI-0005/13	3"	PL	BT0	39044	40	ET	E-0240 Steam Superheater	E-0235 Exchanger	500	291	1379	399	-40	7440	Water	300# RF	40S	0.0mm	316/316L SS	No	5%	No	B31.3	N/A	N/A	Yes	No	
	CSA-390-PR-PI-0002/5	3"	PL	BT0	39045	40	ET	E-0235 Exchanger	E-0225A/B Exchanger	493	252	1379	399	-40	7440	Water	300# RF	40S	0.0mm	316/316L SS	No	5%	No	B31.3	N/A	N/A	Yes	No	
	CSA-390-PR-PI-0002/16	3"	PL	AL3	39046	25	ET	E-0225A/B Exchanger	TK-0220 Residue Storage Tank	411	83	1379	121	-40	2940	Water	150# RF	STD	3.2mm	Low Temp. CS	No	5%	No	B31.3	I-0	Standard Grey	No	No	
	CSA-390-PR-PI-0007/12	2"	PL	BT0	39047	50	ET	P-0240A/B Pump Disch.	T-0240 Fractionator Tower	92	317	1379	399	-40	7440	Water	300# RF	80S	0.0mm	316/316L SS	No	5%	No	B31.3	N/A	N/A	Yes	No	
	CSA-390-PR-PI-0007/10	3"	PL	AO3	39048		N	P-0255A/B Pump Disch.	T-0240 Fractionator Tower	155	58	1586	93	-40	2940	Water	150# RF	STD	3.2mm	Low Temp. CS	Yes	100%	Yes	B31.3	U-0	Standard Grey	Yes	No	
	CSA-390-PR-PI-0010/11	1-1/2"	PW	AO3	39050	25	ET	V-0255 Reflux Drum Boot	P-0260A/B Pump Suction	25	57	758	93	-40	2940	Water	150# RF	160	3.2mm	Low Temp. CS	Yes	100%	Yes	B31.3	I-0	Standard Grey	No	No	
	CSA-390-PR-PI-0011	1-1/2"	PW	AO3	39051	25	ET	P-0260A/B Pumps	Plant 1 Sour Water Flash Vessel	800	57	1724	93	-40	2940	Water	150# RF	160	3.2mm	Low Temp. CS	Yes	100%	Yes	B31.3	I-0	Standard Grey	No	No	
	CSA-390-PR-PI-0010/11	1-1/2"	PW	AO3	39052	25	ET	PCV-3225 Outlet Iso. Valve	V-0255 Reflux Drum	25	57	1034	93	-40	2940	Water	150# RF	160	3.2mm	Low Temp. CS	Yes	100%	Yes	B31.3	I-0	Standard Grey	No	No	
	CSA-390-PR-PI-0010	3"	PG	AO3	39056		N	V-0255 Reflux Drum	PSV-0255 Inlet	26	57	758	93	-40	2940	Water	150# RF	STD	3.2mm	Low Temp. CS	Yes	100%	Yes	B31.3	U-0	Standard Grey	No	No	
	CSA-390-PR-PI-0010	3"	PG	AO3	39057		N	V-0255 Reflux Drum	PV-3218	26	57	758	93	-40	2940	Water	150# RF	STD	3.2mm	Low Temp. CS	Yes	100%	Yes	B31.3	U-0	Standard Grey	No	No	
	CSA-390-PR-PI-0010/15	4"	PG	AO3	39059	25	ET	PV-3218A	Vapour Recovery Unit	7	57	1034	93	-40	2940	Water	150# RF	STD	3.2mm	Low Temp. CS	Yes	100%	Yes	B31.3	I-0	Standard Grey	No	No	
	CSA-390-PR-PI-0015	3"	PG	AO3	39061	25	ET	TP-3910	Vapour Recovery Unit	7	81	1034	93	-40	2940	Water	150# RF	STD	3.2mm	Low Temp. CS	Yes	100%	Yes	B31.3	I-0	Standard Grey	No	No	
	CSA-390-PR-PI-0015	2"	PG	AO3	39062	25	ET	Vapour Recovery Unit	Existing BRC Incinerator	69	32	1034	93	-40	2940	Water	150# RF	XS	3.2mm	Low Temp. CS	Yes	100%	Yes	B31.3	I-0	Standard Grey	No	No	
	CSA-390-PR-PI-0015	2"	PL	AO3	39063		N	Vapour Recovery Unit	Existing BRC Rundown Bullet	700	43	1724	93	-40	2940	Water	150# RF	XS	3.2mm	Low Temp. CS	Yes	100%	Yes	B31.3	U-0	Standard Grey	No	No	
	CSA-390-PR-PI-0016	6"	PL	AL3	39064	25	ET	TK-0220 Residue Storage Tank	Truck-Out Envirobox	15	80	1034	121	-40	2940	Water	150# RF	STD	3.2mm	Low Temp. CS	No	5%	No	B31.3	I-0	Standard Grey	No	No	
	CSA-390-PR-PI-0014	3"	PL	AO3	39065		N	AC-0260 Naphtha Cooler	Skid Edge	75	40	1586	93	-40	2940	Water	150# RF	STD	3.2mm	Low Temp. CS	Yes	100%	Yes	B31.3	U-0	Standard Grey	No	No	
◆	CSA-390-PR-PI-0006	6"	PL	BP3	39066	65	H	ESDV-9210	T-0240 Fractionator	221	357	758	399	-29	7755	Water	300# RF	XS	3.2mm	Chrome Moly, 9 Cr - 1 Mo	Yes	100%	Yes	B31.3	I-4	Standard Grey	Yes	No	
◆	CSA-390-PR-PI-0006	4"	PL	BP3	39067	40	H	PSV-0237	Isolation Valve	221	280	758	343	-29	2710	Water	300# RF	XS	3.2mm	Chrome Moly, 9 Cr - 1 Mo	Yes	100%	Yes	B31.3	I-0	Standard Grey	No	No	
	CSA-390-PR-PI-0001	2"	IA	AL1	39201		N	Piperack I/A Header	SK-231 I/A Users	700	30	1110	93	-40	1221	Air	150# RF	XS	1.6mm	Low Temp. CS	No	5%	No	B31.3	U-0	Standard Grey	No	No	
	CSA-390-PR-PI-0012	2"	IA	AL1	39202		N	Piperack I/A Header	SK-232 I/A Users	700	30	1110	93	-40	1221	Air	150# RF	XS	1.6mm	Low Temp. CS	No	5%	No	B31.3	U-0	Standard Grey	No	No	
	CSA-390-PR-PI-0011	2"	IA	AL1	39203		N	Piperack I/A Header	SK-233 I/A Users	700	30	1110	93	-40	1221	Air	150# RF	XS	1.6mm	Low Temp. CS	No	5%	No	B31.3	U-0	Standard Grey	No	No	

This document is the property of Thermo Design Engineering Ltd. Any unauthorised attempt to reproduce it, in any form, is strictly prohibited.

[redacted]

LINE NUMBER IDENTIFICATION

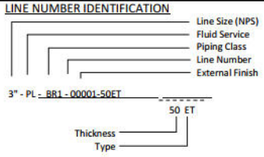

FLUID SERVICE

PG	Process Gas	HM	Heat Medium	FH	High Pressure Flare Header
PL	Process Liquid	UH	Utility Heat Medium	FL	Low Pressure Flare Header
AM	Amine	LO	Lube Oil	FC	Cryogenic Flare Header
AG	Acid Gas	ME	Methanol	AV	Atmospheric Vent
GL	Glycol	HY	Hydrogen	DC	Closed Drain
RF	Refrigerant	CE	Chemical	DO	Open Drain
AO	Ammonia	CA	Caustic	SH	High Pressure Steam
FG	Fuel Gas	UW	Utility Water	CH	High Pressure Condensate
DI	Diesel	PW	Produced Water	SM	Medium Pressure Steam
IA	Instrument Air	FW	Fire Water	CM	Medium Pressure Condensate
PA	Plant Air	PO	Potable Water	SL	Low Pressure Steam
NI	Nitrogen	DW	Demineralized Water	CL	Low Pressure Condensate

PIPING CLASS

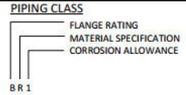

FLANGE RATING

A	ASME Class 150 RF
B	ASME Class 300 RF
C	ASME Class 600 RF
D	ASME Class 900 RF
E	ASME Class 1500 RTJ
F	ASME Class 2500 RTJ
G	ASME Class 600 RTJ
H	ASME Class 900 RTJ

MATERIAL OF CONSTRUCTION

R	Carbon Steel, Reg Temp, Sweet Service
L	Carbon Steel, Low Temp, Sweet Service
N	Carbon Steel, Reg Temp, Sour Service
O	Carbon Steel, Low Temp, Sour Service
S	304 Stainless Steel, Sweet Service
T	316 Stainless Steel, Sweet Service
J	304 Stainless Steel, Sour Service
K	316 Stainless Steel, Sour Service
G	Carbon Steel, Low Temp, Galvanized
C	304 Stainless Steel, Cryogenic Service
D	316 Stainless Steel, Cryogenic Service

CORROSION ALLOWANCE

0	None
1	1.6 mm (1/16")
3	3.2 mm (1/8")
6	6.35 mm (1/4")

EXTERNAL FINISH

N	None
H	Hot Insulation
C	Cold Insulation
PP	Personnel Protection
ET	Electric Traced
HT	Heat Medium Traced
ST	Steam Traced
A	Acoustic

P&ID Document Number	Nominal Pipe Size Inches	Fluid Service Code	Piping Class	Line Number	Insulation mm Thk.	Insulation Type	Routing From	Routing To	Operating Conditions Pres. kPag	Operating Conditions Temp. °C	Design Conditions Pres. kPag	Design Conditions Temp. °C	Design Conditions MDMT °C	Hydrostatic Test Pressure kPag	Hydrostatic Test Medium	ANSI Class	Pipe Schedule	Corrosion Allowance mm	Material of Construction	NACE	X-Ray	PWHT	Design Code	Paint Spec	Finish Color	Stress Analysis Required	ABSA AB-525 Required	Comments
CSA-390-PR-PI-0001/15	2"	IA	AL1	39204		N	SK-231 I/A Header	Vapour Recovery Unit	700	30	1110	93	-40	1221	Air	150# RF	XS	1.6mm	Low Temp. CS	No	5%	No	B31.3	U-0	Standard Grey	No	No	
CSA-390-PR-PI-0006	2"	IA	AL1	39205		N	Piperack I/A Header	PK-235 Crude Heater	700	30	1110	93	-40	1221	Air	150# RF	XS	1.6mm	Low Temp. CS	No	5%	No	B31.3	U-0	Standard Grey	No	No	
CSA-390-PR-PI-0004	2"	FG	AL1	39301		N	Piperack Fuel Gas Header	V-0235 Flash Drum	700	10	1034	66	-40	1137	Air	150# RF	XS	1.6mm	Low Temp. CS	No	5%	No	B31.3	U-0	Standard Grey	No	No	
CSA-390-PR-PI-0004	3/4"	FG	BL1	39302		N	AL1/BL1 Spec Break	SK-231 Utility Station	700	10	2276	66	-40	2504	Air	300# RF	160	1.6mm	Low Temp. CS	No	5%	No	B31.3	U-0	Standard Grey	No	No	
CSA-390-PR-PI-0012	2"	FG	AL1	39303		N	Piperack Fuel Gas Header	SK-232 Skid Edge	700	10	1034	66	-40	1137	Air	150# RF	XS	1.6mm	Low Temp. CS	No	5%	No	B31.3	U-0	Standard Grey	No	No	
CSA-390-PR-PI-0012	2"	FG	BL1	39304		N	SK-232 Skid Edge	SK-232 Utility Station	700	10	2276	66	-40	2504	Air	300# RF	XS	1.6mm	Low Temp. CS	No	5%	No	B31.3	U-0	Standard Grey	No	No	
CSA-390-PR-PI-0006	2"	FG	AL1	39305		N	Piperack Fuel Gas Header	PK-235 Crude Heater	700	10	1034	66	-40	1137	Air	150# RF	XS	1.6mm	Low Temp. CS	No	5%	No	B31.3	U-0	Standard Grey	No	No	
CSA-390-PR-PI-0010/11	2"	FG	AL1	39306		N	Piperack Fuel Gas Header	SK-233 Fuel Gas Header	700	10	1034	66	-40	1137	Air	150# RF	XS	1.6mm	Low Temp. CS	No	5%	No	B31.3	U-0	Standard Grey	No	No	
CSA-390-PR-PI-0011	3/4"	FG	BL1	39307		N	AL1/BL1 Spec Break	SK-233 Utility Station	700	10	2276	66	-40	2504	Air	300# RF	160	1.6mm	Low Temp. CS	No	5%	No	B31.3	U-0	Standard Grey	No	No	
CSA-390-PR-PI-0004/15	2"	FG	AL1	39308		N	SK-231 Fuel Gas Line	Vapour Recovery Unit	700	10	1034	66	-40	1137	Air	150# RF	XS	1.6mm	Low Temp. CS	No	5%	No	B31.3	U-0	Standard Grey	No	No	
CSA-390-PR-PI-0006	1"	FG	AL1	39309		N	PK-235	Crude Feed Heater	100	10	1034	66	-40	1137	Air	150# RF	XS	1.6mm	Low Temp. CS	No	5%	No	B31.3	U-0	Standard Grey	No	No	
CSA-390-PR-PI-0006	1"	FG	AL1	39310		N	PK-235	Crude Feed Heater	100	10	1034	66	-40	1137	Air	150# RF	XS	1.6mm	Low Temp. CS	No	5%	No	B31.3	U-0	Standard Grey	No	No	
CSA-390-PR-PI-0006	1"	FG	AL1	39311		N	PK-235	Crude Feed Heater	100	10	1034	66	-40	1137	Air	150# RF	XS	1.6mm	Low Temp. CS	No	5%	No	B31.3	U-0	Standard Grey	No	No	
CSA-390-PR-PI-0006	1/2"	FG	AL1	39312		N	PK-235	Crude Feed Heater	50	10	1034	66	-40	1137	Air	150# RF	XS	1.6mm	Low Temp. CS	No	5%	No	B31.3	U-0	Standard Grey	No	No	
CSA-390-PR-PI-0006	1/2"	FG	AL1	39313		N	PK-235	Crude Feed Heater	50	10	1034	66	-40	1137	Air	150# RF	XS	1.6mm	Low Temp. CS	No	5%	No	B31.3	U-0	Standard Grey	No	No	
CSA-390-PR-PI-0006	1/2"	FG	AL1	39314		N	PK-235	Crude Feed Heater	50	10	1034	66	-40	1137	Air	150# RF	XS	1.6mm	Low Temp. CS	No	5%	No	B31.3	U-0	Standard Grey	No	No	
CSA-390-PR-PI-0009	2"	HM	AL1	39401	25	H	Piperack HM Supply Header	AC-0255 Heating Coil	752	163	1378	204	-40	2940	Water	150# RF	XS	1.6mm	Low Temp. CS	No	5%	No	B31.3	I-0	Standard Grey	No	No	
CSA-390-PR-PI-0009	2"	HM	AL1	39402	25	H	AC-0255 Heating Coil	Piperack HM Return Header	620	149	1378	204	-40	2940	Water	150# RF	XS	1.6mm	Low Temp. CS	No	5%	No	B31.3	I-0	Standard Grey	No	No	
CSA-390-PR-PI-0016	2"	HM	AL1	39403	25	H	Piperack HM Supply Header	TK-0220 Heating Coil	752	163	1378	204	-40	2940	Water	150# RF	XS	1.6mm	Low Temp. CS	No	5%	No	B31.3	I-0	Standard Grey	No	No	
CSA-390-PR-PI-0016	2"	HM	AL1	39404	25	H	TK-0220 Heating Coil	Piperack HM Return Header	620	149	1378	204	-40	2940	Water	150# RF	XS	1.6mm	Low Temp. CS	No	5%	No	B31.3	I-0	Standard Grey	No	No	
CSA-390-PR-PI-0012	2"	GL	AL1	39420		N	Rack CG Supply Header	SK-232 CG Supply Header	436	28	827	65	-40	2940	Water	150# RF	XS	1.6mm	Low Temp. CS	No	5%	No	B31.3	U-0	Standard Grey	No	No	
CSA-390-PR-PI-0012	2"	GL	AL1	39421	25	PP	SK-232 CG Return Header	Rack CG Return Header	436	66	827	75	-40	2940	Water	150# RF	XS	1.6mm	Low Temp. CS	No	5%	No	B31.3	I-0	Standard Grey	No	No	
CSA-390-PR-PI-0011	2"	GL	AL1	39422		N	Rack CG Supply Header	SK-233 CG Supply Header	436	28	827	65	-40	2940	Water	150# RF	XS	1.6mm	Low Temp. CS	No	5%	No	B31.3	U-0	Standard Grey	No	No	
CSA-390-PR-PI-0011	2"	GL	AL1	39423	25	PP	SK-233 CG Return Header	Rack CG Return Header	436	66	827	75	-40	2940	Water	150# RF	XS	1.6mm	Low Temp. CS	No	5%	No	B31.3	I-0	Standard Grey	No	No	
CSA-390-PR-PI-0015	2"	GL	AL1	39424		N	Piperack CG Supply Header	Vapour Recovery Unit	436	28	827	65	-40	2940	Water	150# RF	XS	1.6mm	Low Temp. CS	No	5%	No	B31.3	U-0	Standard Grey	No	No	
CSA-390-PR-PI-0015	2"	GL	AL1	39425	25	PP	Vapour Recovery Unit	Piperack CG Return Header	436	66	827	75	-40	2940	Water	150# RF	XS	1.6mm	Low Temp. CS	No	5%	No	B31.3	I-0	Standard Grey	No	No	
CSA-390-PR-PI-0001/2/3/4/5	8"	FL	AO3	39501		N	PSV Relief Sources	Piperack LP Flare Header	0	38	350	125	-40	2940	Water	150# RF	STD	3.2mm	Low Temp. CS	Yes	100%	Yes	B31.3	U-0	Standard Grey	Yes	No	
CSA-390-PR-PI-0007	6"	FL	AO3	39502		N	PSV-0240 Discharge	Piperack LP Flare Header	0	38	350	125	-40	2940	Water	150# RF	STD	3.2mm	Low Temp. CS	Yes	100%	Yes	B31.3	U-0	Standard Grey	No	No	
CSA-390-PR-PI-0010	4"	FL	AO3	39503		N	SK-233 Flare Header	Piperack LP Flare Header	0	38	350	125	-40	2940	Water	150# RF	STD	3.2mm	Low Temp. CS	Yes	100%	Yes	B31.3	U-0	Standard Grey	No	No	
CSA-390-PR-PI-0012	2"	FL	AL1	39504		N	SK-232 Flare Header	Piperack LP Flare Header	0	38	350	125	-40	2940	Water	150# RF	XS	1.6mm	Low Temp. CS	No	5%	No	B31.3	U-0	Standard Grey	No	No	
CSA-390-PR-PI-0015	2"	FL	AO3	39505		N	Vapour Recovery Unit	SK-231 Flare Header	0	38	350	125	-40	2940	Water	150# RF	XS	3.2mm	Low Temp. CS	Yes	100%	Yes	B31.3	U-0	Standard Grey	No	No	
CSA-390-PR-PI-0001/2/3	2"	DC	AO3	39601	25	ET	SK-231 Drain Header	Piperack Drain Header	0	38	350	93	-40	2940	Water	150# RF	XS	3.2mm	Low Temp. CS	Yes	100%	Yes	B31.3	I-0	Standard Grey	No	No	

This document is the property of Thermo Design Engineering Ltd. Any unauthorised attempt to reproduce it, in any form, is strictly prohibited.

LINE NUMBER IDENTIFICATION

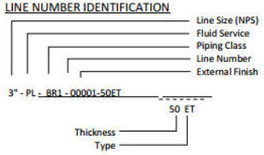

FLUID SERVICE

PG	Process Gas	HM	Heat Medium	FH	High Pressure Flare Header
PL	Process Liquid	UH	Utility Heat Medium	FL	Low Pressure Flare Header
AM	Amine	LO	Lube Oil	FC	Cryogenic Flare Header
AG	Acid Gas	ME	Methanol	AV	Atmospheric Vent
GL	Glycol	HY	Hydrogen	DC	Closed Drain
RF	Refrigerant	CE	Chemical	DO	Open Drain
AO	Ammonia	CA	Caustic	SH	High Pressure Steam
FG	Fuel Gas	UW	Utility Water	CH	High Pressure Condensate
DI	Diesel	PW	Produced Water	SM	Medium Pressure Steam
IA	Instrument Air	FW	Fire Water	CM	Medium Pressure Condensate
PA	Plant Air	PO	Potable Water	SL	Low Pressure Steam
NI	Nitrogen	DW	Demineralized Water	CL	Low Pressure Condensate

PIPING CLASS

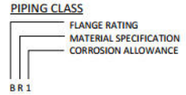

FLANGE RATING

A	ASME Class 150 RF
B	ASME Class 300 RF
C	ASME Class 600 RF
D	ASME Class 900 RF
E	ASME Class 1500 RTJ
F	ASME Class 2500 RTJ
G	ASME Class 600 RTJ
H	ASME Class 900 RTJ

MATERIAL OF CONSTRUCTION

R	Carbon Steel, Reg Temp, Sweet Service
L	Carbon Steel, Low Temp, Sweet Service
N	Carbon Steel, Reg Temp, Sour Service
O	Carbon Steel, Low Temp, Sour Service
S	304 Stainless Steel, Sweet Service
T	316 Stainless Steel, Sweet Service
J	304 Stainless Steel, Sour Service
K	316 Stainless Steel, Sour Service
G	Carbon Steel, Low Temp, Galvanized
C	304 Stainless Steel, Cryogenic Service
D	316 Stainless Steel, Cryogenic Service

CORROSION ALLOWANCE

0	None
1	1.6 mm (1/16")
3	3.2 mm (1/8")
6	6.35 mm (1/4")

EXTERNAL FINISH

N	None
H	Hot Insulation
C	Cold Insulation
PP	Personnel Protection
ET	Electric Traced
HT	Heat Medium Traced
ST	Steam Traced
A	Acoustic

	P&ID Document Number	Nominal Pipe Size Inches	Fluid Service Code	Piping Class	Line Number	Insulation mm Thk.	Insulation Type	Routing From	Routing To	Operating Conditions Pres. kPag	Operating Conditions Temp. °C	Design Conditions Pres. kPag	Design Conditions Temp. °C	Design Conditions MDMT °C	Hydrostatic Test Pressure kPag	Hydrostatic Test Medium	ANSI Class	Pipe Schedule	Corrosion Allowance mm	Material of Construction	NACE	X-Ray	PWHT	Design Code	Paint Spec	Finish Color	Stress Analysis Required	ABSA AB-525 Required	Comments
	CSA-390-PR-PI-0005/12/13	2"	DC	AL3	39602	25	ET	SK-232 Drain Header	Piperack Drain Header	0	38	350	93	-40	2940	Water	150# RF	XS	3.2mm	Low Temp. CS	No	5%	No	B31.3	I-0	Standard Grey	No	No	
	CSA-390-PR-PI-0010/11	2"	DC	AO3	39603	25	ET	SK-233 Drain Header	Piperack Drain Header	0	38	350	93	-40	2940	Water	150# RF	XS	3.2mm	Low Temp. CS	Yes	100%	Yes	B31.3	I-0	Standard Grey	No	No	
	CSA-390-PR-PI-0003/15	2"	DC	AO3	39604	25	ET	Vapour Recovery Unit	SK-231 Drain Header	0	38	350	93	-40	2940	Water	150# RF	XS	3.2mm	Low Temp. CS	Yes	100%	Yes	B31.3	I-0	Standard Grey	No	No	
	CSA-390-PR-PI-0013	2"	SL	AL1	39700	25	ET	Piperack LP Steam Header	SK-232 Skid Edge	469	156	862	185	-40	2940	Water	150# RF	XS	1.6mm	Low Temp. CS	No	5%	No	B31.3	I-0	Standard Grey	No	No	
	CSA-390-PR-PI-0013	3"	SL	BL1	39701	25	ET	SK-232 Skid Edge	E-0240 Steam Superheater	469	156	862	185	-40	7665	Water	300# RF	STD	1.6mm	Low Temp. CS	No	5%	No	B31.3	I-0	Standard Grey	No	No	
	CSA-390-PR-PI-0013	2"	SL	BL1	39702	40	ET	E-0240 Steam Superheater	FV-0212A/B/C	95	302	862	343	-40	7665	Water	300# RF	XS	1.6mm	Low Temp. CS	No	5%	No	B31.3	I-4	Standard Grey	Yes	No	
	CSA-390-PR-PI-0008/13	2"	SL	BL1	39703	40	ET	FV-0212A	T-0250 Kerosene Stripper	95	302	862	343	-40	7665	Water	300# RF	XS	1.6mm	Low Temp. CS	No	5%	No	B31.3	I-4	Standard Grey	Yes	No	
	CSA-390-PR-PI-0008/13	2"	SL	BL1	39704	40	ET	FV-0212B	T-0245 Diesel Stripper	95	302	862	343	-40	7665	Water	300# RF	XS	1.6mm	Low Temp. CS	No	5%	No	B31.3	I-4	Standard Grey	Yes	No	
	CSA-390-PR-PI-0007/13	2"	SL	BL1	39705	40	ET	FV-0212C	T-0240 Fractionator Tower	95	302	862	343	-40	7665	Water	300# RF	XS	1.6mm	Low Temp. CS	No	5%	No	B31.3	I-4	Standard Grey	Yes	No	
	CSA-390-PR-PI-0013	2"	SL	AO3	39706	25	ET	SK-232 Steam Cond. Hdr.	Rack Steam Cond. Hdr.	39	156	862	185	-40	2940	Water	150# RF	XS	3.2mm	Low Temp. CS	Yes	100%	Yes	B31.3	I-0	Standard Grey	No	No	
	CSA-390-PR-PI-0011	2"	SL	AL1	39707	25	ET	Piperack LP Steam Header	SK-233 Utility Station	469	156	862	185	-40	2940	Water	150# RF	XS	1.6mm	Low Temp. CS	No	5%	No	B31.3	I-0	Standard Grey	No	No	
	CSA-390-PR-PI-0011	2"	SL	AO3	39708	25	ET	SK-233 Steam Cond. Hdr.	Rack Steam Cond. Hdr.	39	156	862	185	-40	2940	Water	150# RF	XS	3.2mm	Low Temp. CS	Yes	100%	Yes	B31.3	I-0	Standard Grey	No	No	
	CSA-390-PR-PI-0009	2"	SL	AO3	39709	25	ET	Piperack Steam Condensate Hdr.	AC-0255 Condenser	39	156	862	185	-40	2940	Water	150# RF	XS	3.2mm	Low Temp. CS	Yes	100%	Yes	B31.3	I-0	Standard Grey	No	No	
	CSA-390-PR-PI-0013	3"	SL	AL1	39711	25	ET	PSV-0241 Discharge	Atmosphere	0	30	862	343	-40	2940	Water	150# RF	STD	1.6mm	Low Temp. CS	No	5%	No	B31.3	I-0	Standard Grey	Yes	No	
	CSA-390-PR-PI-0004	---	---	AL3	39904	40	H	V-0235 Vessel Trim	V-0235 Vessel Trim	241	210	758	268	-40	2940	Water	150# RF	---	3.2mm	Low Temp. CS	No	5%	No	B31.3	I-0	Standard Grey	No	No	
◆	CSA-390-PR-PI-0004	---	---	BL3	39905	25	H	P-0235A/B Trim	P-0235A/B Trim	870	210	1724	268	-40	7665	Water	300# RF	---	3.2mm	Low Temp. CS	No	5%	No	B31.3	I-0	Standard Grey	Yes	Yes	
	CSA-390-PR-PI-0007	---	---	BL3	39907	25	H	T-0240 Vessel Trim - Top Sec.	T-0240 Vessel Trim - Top Sec.	221	357	758	399	-40	7665	Water	300# RF	---	3.2mm	Low Temp. CS	No	5%	No	B31.3	I-4	Standard Grey	No	No	
	CSA-390-PR-PI-0007	---	---	BT0	39908	50	ET	T-0240 Vessel Trim - Btm. Sec.	T-0240 Vessel Trim - Btm. Sec.	221	357	758	399	-40	7440	Water	300# RF	---	0.0mm	316/316L SS	No	5%	No	B31.3	I-4	Standard Grey	No	No	
	CSA-390-PR-PI-0008	---	---	AL3	39909	50	ET	T-0245 Vessel Trim	T-0245 Vessel Trim	78	316	758	343	-40	2940	Water	150# RF	---	3.2mm	Low Temp. CS	No	5%	No	B31.3	I-4	Standard Grey	No	No	
	CSA-390-PR-PI-0008	---	---	AL3	39910	40	ET	T-0250 Vessel Trim	T-0250 Vessel Trim	170	210	758	232	-40	2940	Water	150# RF	---	3.2mm	Low Temp. CS	No	5%	No	B31.3	I-0	Standard Grey	No	No	
◆	CSA-390-PR-PI-0008	---	---	BL3	39911	40	H	P-0245A/B Trim	P-0245A/B Trim	354	303	1379	343	-40	7665	Water	300# RF	---	3.2mm	Low Temp. CS	No	5%	No	B31.3	I-4	Standard Grey	Yes	Yes	
◆	CSA-390-PR-PI-0008	---	---	BL3	39912	25	H	P-0250A/B Trim	P-0250A/B Trim	1103	200	2276	232	-40	7665	Water	300# RF	---	3.2mm	Low Temp. CS	No	5%	No	B31.3	I-0	Standard Grey	Yes	Yes	
	CSA-390-PR-PI-0010	---	---	AO3	39914	25	ET	V-0255 Vessel Trim	V-0255 Vessel Trim	26	57	758	93	-40	2940	Water	150# RF	---	3.2mm	Low Temp. CS	Yes	100%	Yes	B31.3	I-0	Standard Grey	No	No	ET on LIT/LG-1224 and Hot Ins. on LIT/LG-1226
◆	CSA-390-PR-PI-0010	---	---	AO3	39021		N	P-0255A/B Trim	P-0255A/B Trim	366	58	1586	93	-40	2940	Water	150# RF	---	3.2mm	Low Temp. CS	Yes	100%	Yes	B31.3	U-0	Standard Grey	Yes	Yes	
	CSA-570-PR-PI-0001	4"	PL	AO3	57001		N	Feed Tank	P-0220A/B Pump Suction	15	15	1034	93	-40	2940	Water	150# RF	STD	3.2mm	Low Temp. CS	Yes	100%	Yes	B31.3	U-0	Standard Grey	Yes	No	
	CSA-570-PR-PI-0001	3"	PL	AO3	57002		N	P-0220A/B Pump Discharge	SK-231 Skid Edge	862	32	1724	93	-40	2940	Water	150# RF	STD	3.2mm	Low Temp. CS	Yes	100%	Yes	B31.3	U-0	Standard Grey	Yes	Yes	
	CSA-570-PR-PI-0001	3"	PL	AO3	57003		N	P-0220A/B Pump Disch.	Feed Tank (Min Flow Recy.)	54	15	1724	93	-40	2940	Water	150# RF	STD	3.2mm	Low Temp. CS	Yes	100%	Yes	B31.3	U-0	Standard Grey	Yes	No	
	CSA-570-PR-PI-0002	2"	PL	AL3	57004		N	FE-0220 Product Meter	Diesel Storage Tank	54	43	1379	93	-40	2940	Water	150# RF	XS	3.2mm	Low Temp. CS	No	5%	No	B31.3	U-0	Standard Grey	No	No	
	CSA-570-PR-PI-0002	2"	PL	AL3	57005		N	FE-0221 Product Meter	Kerosene Storage Tank	54	43	1034	93	-40	2940	Water	150# RF	XS	3.2mm	Low Temp. CS	No	5%	No	B31.3	U-0	Standard Grey	No	No	
	CSA-570-PR-PI-0002	3"	PL	AL3	57006		N	FE-0222 Product Meter	Naphtha Storage Tank	54	43	1586	93	-40	2940	Water	150# RF	STD	3.2mm	Low Temp. CS	No	5%	No	B31.3	U-0	Standard Grey	No	No	
	CSA-570-PR-PI-0002	3"	PL	AL3	57007		N	Off-Spec Recycle Lines	Sales Oil Tank	54	43	1586	93	-40	2940	Water	150# RF	STD	3.2mm	Low Temp. CS	No	5%	No	B31.3	U-0	Standard Grey	No	No	
	CSA-570-PR-PI-0001	2"	IA	AL1	57201		N	Piperack I/A Header	SK-236 I/A Users	700	30	1110	93	-40	1221	Air	150# RF	XS	1.6mm	Low Temp. CS	No	5%	No	B31.3	U-0	Standard Grey	No	No	

This document is the property of Thermo Design Engineering Ltd. Any unauthorised attempt to reproduce it, in any form, is strictly prohibited.

LINE NUMBER IDENTIFICATION

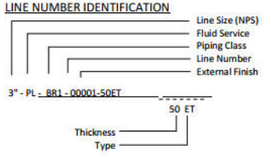

FLUID SERVICE

PG	Process Gas	HM	Heat Medium	FH	High Pressure Flare Header
PL	Process Liquid	UH	Utility Heat Medium	FL	Low Pressure Flare Header
AM	Amine	LO	Lube Oil	FC	Cryogenic Flare Header
AG	Acid Gas	ME	Methanol	AV	Atmospheric Vent
GL	Glycol	HY	Hydrogen	DC	Closed Drain
RF	Refrigerant	CE	Chemical	DO	Open Drain
AO	Ammonia	CA	Caustic	SH	High Pressure Steam
FG	Fuel Gas	UW	Utility Water	CH	High Pressure Condensate
DI	Diesel	PW	Produced Water	SM	Medium Pressure Steam
IA	Instrument Air	FW	Fire Water	CM	Medium Pressure Condensate
PA	Plant Air	PO	Potable Water	SL	Low Pressure Steam
NI	Nitrogen	DW	Demineralized Water	CL	Low Pressure Condensate

PIPING CLASS

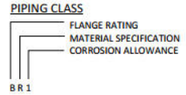

FLANGE RATING

A	ASME Class 150 RF
B	ASME Class 300 RF
C	ASME Class 600 RF
D	ASME Class 900 RF
E	ASME Class 1500 RTJ
F	ASME Class 2500 RTJ
G	ASME Class 600 RTJ
H	ASME Class 900 RTJ

MATERIAL OF CONSTRUCTION

R	Carbon Steel, Reg Temp, Sweet Service
L	Carbon Steel, Low Temp, Sweet Service
N	Carbon Steel, Reg Temp, Sour Service
O	Carbon Steel, Low Temp, Sour Service
S	304 Stainless Steel, Sweet Service
T	316 Stainless Steel, Sweet Service
J	304 Stainless Steel, Sour Service
K	316 Stainless Steel, Sour Service
G	Carbon Steel, Low Temp, Galvanized
C	304 Stainless Steel, Cryogenic Service
D	316 Stainless Steel, Cryogenic Service

CORROSION ALLOWANCE

0	None
1	1.6 mm (1/16")
3	3.2 mm (1/8")
6	6.35 mm (1/4")

EXTERNAL FINISH

N	None
H	Hot Insulation
C	Cold Insulation
PP	Personnel Protection
ET	Electric Traced
HT	Heat Medium Traced
ST	Steam Traced
A	Acoustic

P&ID Document Number	Nominal Pipe Size Inches	Fluid Service Code	Piping Class	Line Number	Insulation mm Thk.	Insulation Type	Routing From	Routing To	Operating Conditions Pres. kPag	Operating Conditions Temp. °C	Design Conditions Pres. kPag	Design Conditions Temp. °C	Design Conditions MDMT °C	Hydrostatic Test Pressure kPag	Hydrostatic Test Medium	ANSI Class	Pipe Schedule	Corrosion Allowance mm	Material of Construction	NACE	X-Ray	PWHT	Design Code	Paint Spec	Finish Color	Stress Analysis Required	ABSA AB-525 Required	Comments
CSA-570-PR-PI-0002	2"	IA	AL1	57202		N	Piperack I/A Header	SK-238 I/A Users	700	30	1110	93	-40	1221	Air	150# RF	XS	1.6mm	Low Temp. CS	No	5%	No	B31.3	U-0	Standard Grey	No	No	
CSA-570-PR-PI-0001	2"	FG	AL1	57301		N	Piperack Fuel Gas Header	SK-236 Utility Station	700	10	1034	66	-40	1137	Air	150# RF	XS	1.6mm	Low Temp. CS	No	5%	No	B31.3	U-0	Standard Grey	No	No	
CSA-570-PR-PI-0001	2"	DC	AO3	57601	25	ET	SK-236 Closed Drain	BRC Closed Drain Header	0	38	350	93	-40	2940	Water	150# RF	XS	3.2mm	Low Temp. CS	Yes	100%	Yes	B31.3	I-0	Standard Grey	No	No	
CSA-800-PR-PI-0003	2"	IA	AL1	80201		N	TP-8003	Piperack I/A Header	700	30	1110	93	-40	1221	Air	150# RF	XS	1.6mm	Low Temp. CS	No	5%	No	B31.3	U-0	Standard Grey	No	No	
CSA-800-PR-PI-0004	2"	FG	AL1	80301		N	TP-8004	Piperack Fuel Gas Header	700	10	1034	66	-40	1137	Air	150# RF	XS	1.6mm	Low Temp. CS	No	5%	No	B31.3	U-0	Standard Grey	No	No	
CSA-800-PR-PI-0001/4	2"	FG	AL1	80302		N	Piperack FG Header	LP Flare Purge Gas Regulator	700	10	1034	66	-40	1137	Air	150# RF	XS	1.6mm	Low Temp. CS	No	5%	No	B31.3	U-0	Standard Grey	No	No	
CSA-800-PR-PI-0006	2"	HM	AL1	80401	25	H	TP-8007	Piperack HM Supply Header	752	163	1378	205	-40	2940	Water	150# RF	XS	1.6mm	Low Temp. CS	No	5%	No	B31.3	I-0	Standard Grey	No	No	
CSA-800-PR-PI-0006	2"	HM	AL1	80402	25	H	Piperack HM Return Header	TP-8008	620	149	1378	205	-40	2940	Water	150# RF	XS	1.6mm	Low Temp. CS	No	5%	No	B31.3	I-0	Standard Grey	No	No	
CSA-800-PR-PI-0005	3"	GL	AL1	80421		N	TP-8005	Piperack Cooling Glycol Supply Header	436	28	827	65	-40	2940	Water	150# RF	STD	1.6mm	Low Temp. CS	No	5%	No	B31.3	U-0	Standard Grey	No	No	
CSA-800-PR-PI-0005	3"	GL	AL1	80422		N	Piperack Cooling Glycol Return Header	TP-8006	436	66	827	75	-40	2940	Water	150# RF	STD	1.6mm	Low Temp. CS	No	5%	No	B31.3	U-0	Standard Grey	No	No	
CSA-800-PR-PI-0001	8"	FL	AO3	80501		N	Piperack LP Flare Header	TP-8001	0	38	350	125	-40	2940	Water	150# RF	STD	3.2mm	Low Temp. CS	Yes	100%	Yes	B31.3	U-0	Standard Grey	No	No	
CSA-800-PR-PI-0002	2"	DC	AO3	80601	25	ET	Piperack Closed Drain Header	TP-8002	0	38	350	93	-40	2940	Water	150# RF	XS	3.2mm	Low Temp. CS	Yes	100%	Yes	B31.3	I-0	Standard Grey	No	No	
CSA-800-PR-PI-0007	2"	SL	AL1	80700	25	ET	TP-8009	Piperack LP Steam Header	469	156	862	185	-40	2940	Water	150# RF	XS	1.6mm	Low Temp. CS	No	5%	No	B31.3	I-0	Standard Grey	No	No	
CSA-800-PR-PI-0007	2"	SL	AO3	80701	25	ET	Steam Condensate Header	Steam Condensate Header	39	156	862	185	-40	2940	Water	150# RF	XS	3.2mm	Low Temp. CS	Yes	100%	Yes	B31.3	I-0	Standard Grey	No	No	

NOTES:
1. Pipe schedule shown for main line size only. Schedules for all pipe sizes shall be per [redacted] EN-STD-4001 Piping Material Specification.
2. Line list based on Revision 0C PIDs.
3. Per ABSA AB-525 Over Pressure Protection Requirements for Pressure Vessels and Pressure Piping.

HOLDS:

This document is the property of Thermo Design Engineering Ltd. Any unauthorised attempt to reproduce it, in any form, is strictly prohibited.

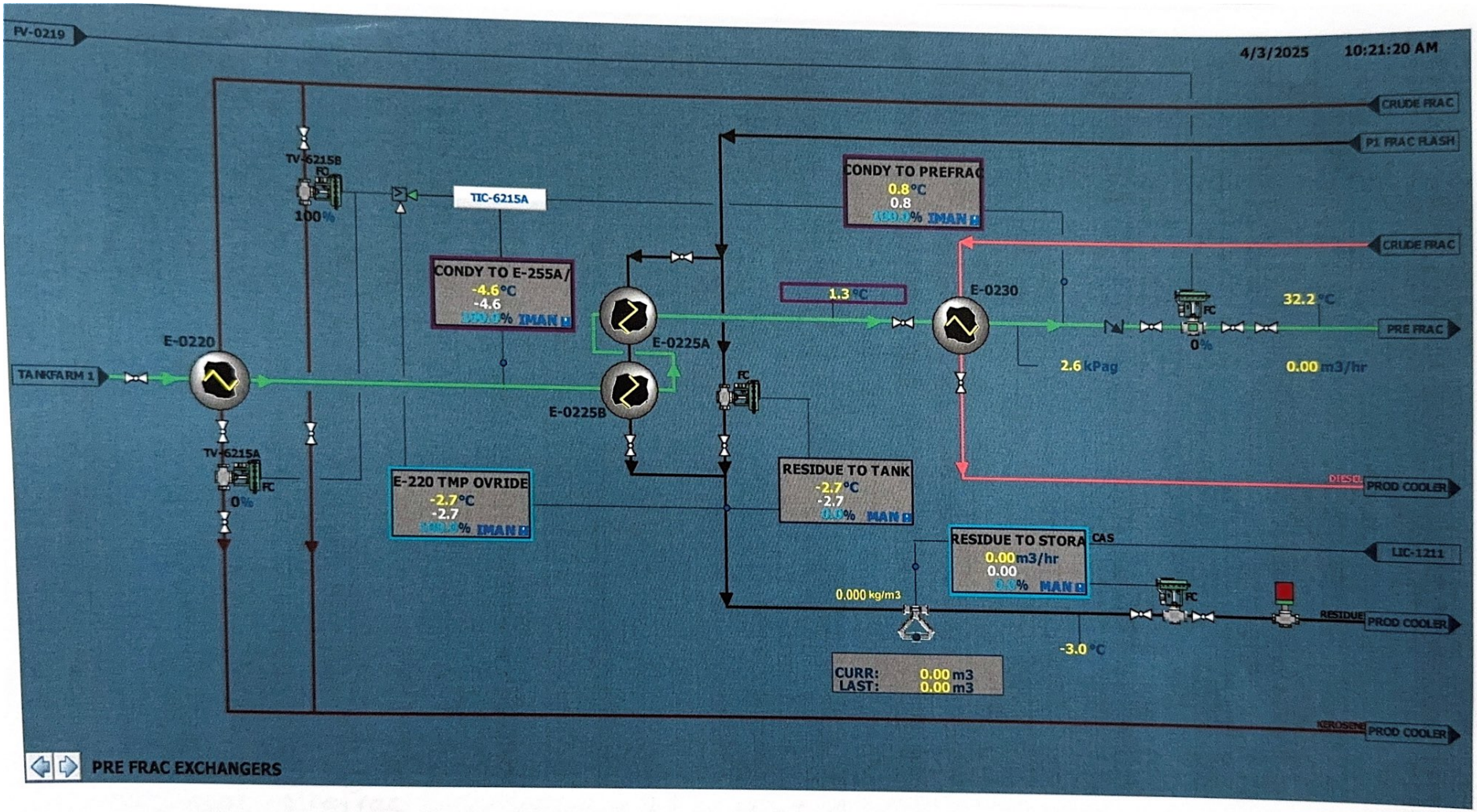
FV-0219
4/3/2025
10:21:20 AM
CRUDE FRAC
P1 FRAC FLASH
TV-6215B
FO
100 %
TIC-6215A
CONDY TO PREFRAC
0.8 °C
0.8
MAN
CONDY TO E-255A/
-4.6 °C
-4.6
MAN
1.3 °C
E-0230
CRUDE FRAC
32.2 °C
PRE FRAC
FC
0 %
E-0220
E-0225A
TANKFARM 1
2.6 kPag
0.00 m3/hr
E-0225B
FC
TV-6215A
FC
0 %
E-220 TMP OVRIDE
-2.7 °C
-2.7
MAN
RESIDUE TO TANK
-2.7 °C
-2.7
MAN
DIESEL
PROD COOLER
RESIDUE TO STORA
0.00 m3/hr
0.00
MAN
CAS
LIC-1211
0.000 kg/m3
FC
RESIDUE
PROD COOLER
-3.0 °C
CURR: 0.00 m3
LAST: 0.00 m3
KEROSENE
PROD COOLER
PRE FRAC EXCHANGERS

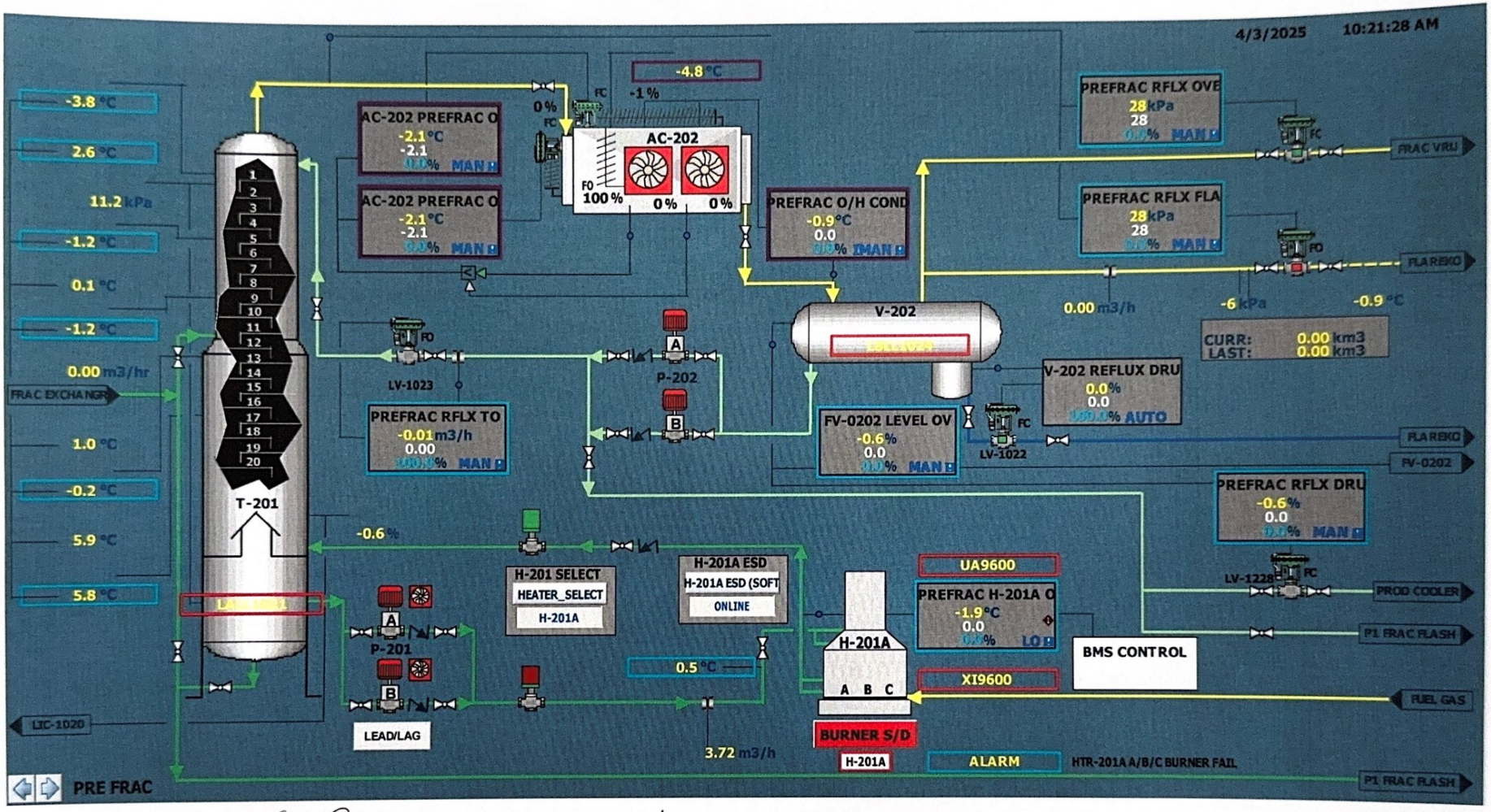

T-201 Prefrac
Converted from existing
Sour Plant 1
Was a Sour condensate
Stabilizer Tower.
is it Part of the $ale?

H-201A
Converted from
Plant 1-Stab Reboiler
To CSA Prefrac
HTR:
is it Part of the $ale

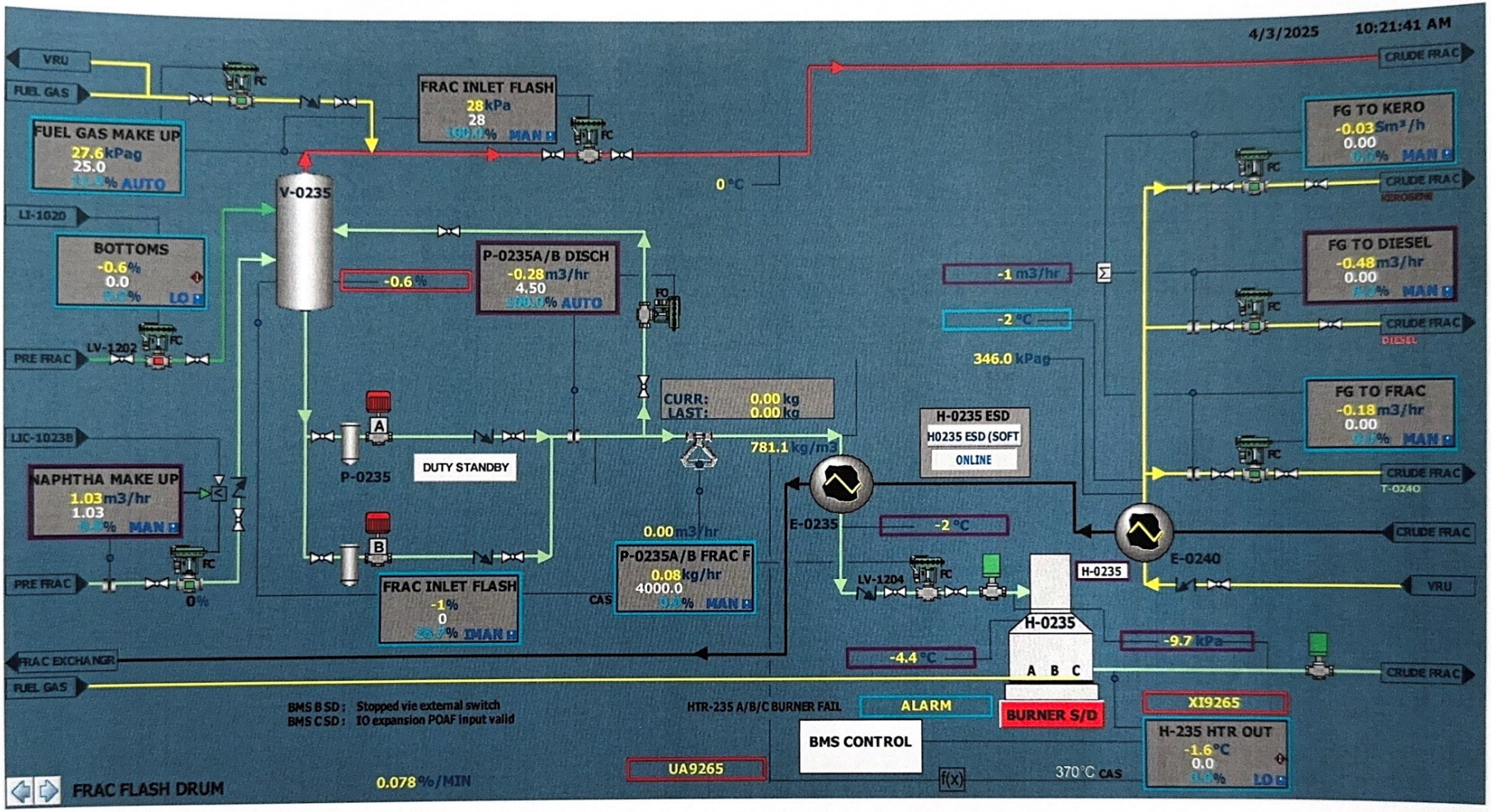
4/3/2025
10:21:41 AM
VRU
FUEL GAS
FUEL GAS MAKE UP
27.6 kPag
25.0
AUTO
FRAC INLET FLASH
28 kPa
28
MAN
V-0235
LI-1020
BOTTOMS
-0.6 %
0.0
LO
PRE FRAC
LV-1202
-0.6 %
P-0235A/B DISCH
-0.28 m3/hr
4.50
AUTO
0 °C
CRUDE FRAC
FG TO KERO
-0.03 Sm³/h
0.00
MAN
KEROSENE
FG TO DIESEL
-0.48 m3/hr
0.00
MAN
DIESEL
FG TO FRAC
-0.18 m3/hr
0.00
MAN
T-0240
-1 m3/hr
-2 °C
346.0 kPag
CURR: 0.00 kg
LAST: 0.00 kg
781.1 kg/m3
H-0235 ESD
H0235 ESD (SOFT
ONLINE
LIC-1023B
NAPHTHA MAKE UP
1.03 m3/hr
1.03
MAN
A
B
P-0235
DUTY STANDBY
0.00 m3/hr
P-0235A/B FRAC F
0.08 kg/hr
4000.0
MAN
FRAC INLET FLASH
-1 %
0
MAN
CAS
E-0235
-2 °C
E-0240
H-0235
LV-1204
H-0235
A B C
-4.4 °C
-9.7 kPa
FRAC EXCHANGR
FUEL GAS
BMS B SD : Stopped vie external switch
BMS C SD : IO expansion POAF input valid
HTR-235 A/B/C BURNER FAIL
ALARM
BURNER S/D
XI9265
H-235 HTR OUT
-1.6 °C
0.0
LO
BMS CONTROL
UA9265
f(x)
370 °C CAS
FRAC FLASH DRUM
0.078 %/MIN

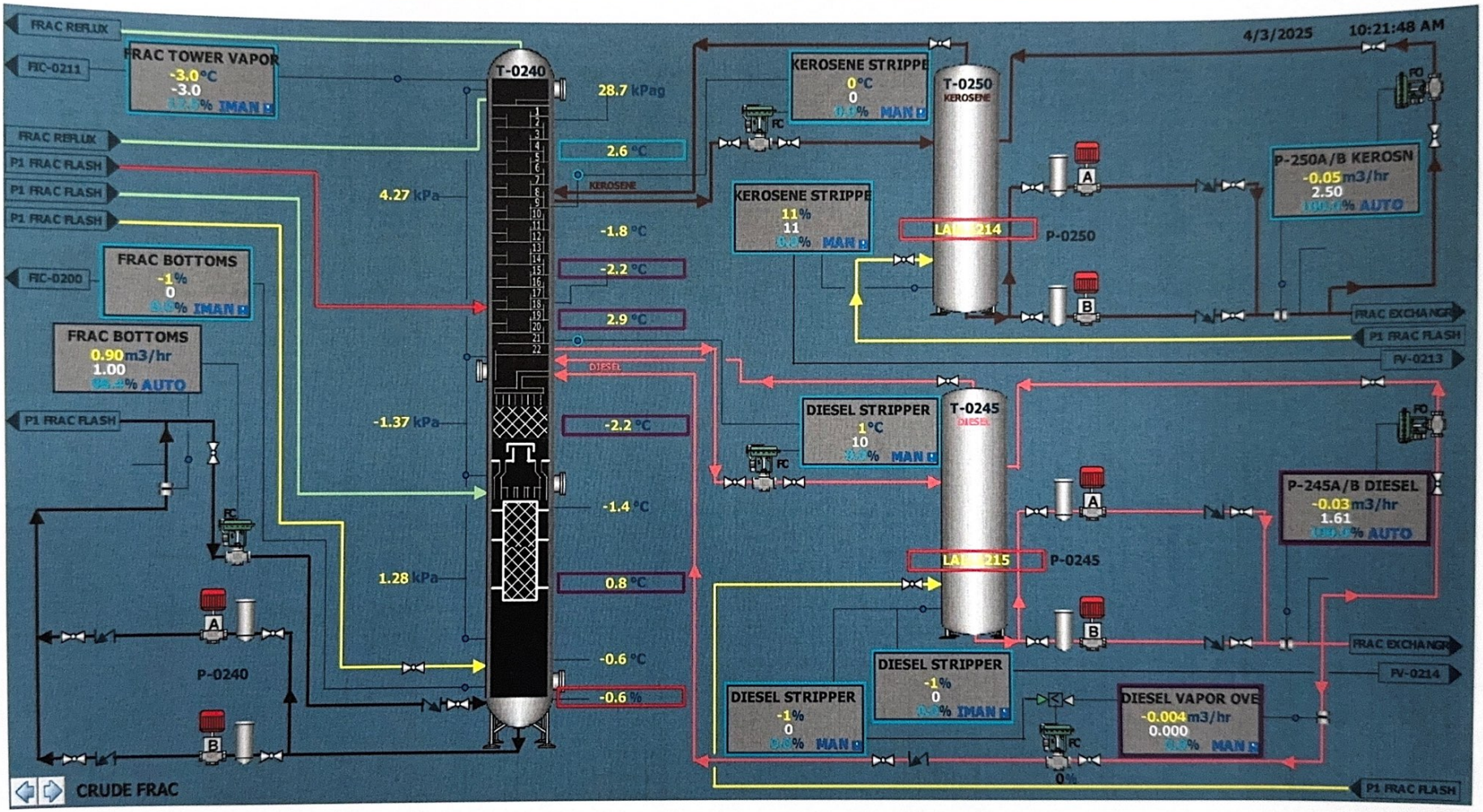
4/3/2025
10:21:48 AM
FRAC REFLUX
FIC-0211
FRAC TOWER VAPOR
-3.0 °C
-3.0
IMAN
T-0240
28.7 kPag
2.6 °C
KEROSENE
4.27 kPa
-1.8 °C
-2.2 °C
2.9 °C
DIESEL
-1.37 kPa
-2.2 °C
-1.4 °C
1.28 kPa
0.8 °C
-0.6 °C
-0.6 %
FRAC REFLUX
P1 FRAC FLASH
P1 FRAC FLASH
P1 FRAC FLASH
FIC-0200
FRAC BOTTOMS
-1 %
0
IMAN
FRAC BOTTOMS
0.90 m3/hr
1.00
AUTO
P1 FRAC FLASH
P-0240
KEROSENE STRIPPE
0 °C
0
MAN
KEROSENE STRIPPE
11 %
11
MAN
T-0250
KEROSENE
LA 214
P-0250
P-250A/B KEROSN
-0.05 m3/hr
2.50
AUTO
FRAC EXCHANGR
P1 FRAC FLASH
FV-0213
DIESEL STRIPPER
1 °C
10
MAN
T-0245
DIESEL
LA 215
P-0245
P-245A/B DIESEL
-0.03 m3/hr
1.61
AUTO
FRAC EXCHANGR
FV-0214
DIESEL STRIPPER
-1 %
0
IMAN
DIESEL STRIPPER
-1 %
0
MAN
DIESEL VAPOR OVE
-0.004 m3/hr
0.000
MAN
0 %
P1 FRAC FLASH
CRUDE FRAC

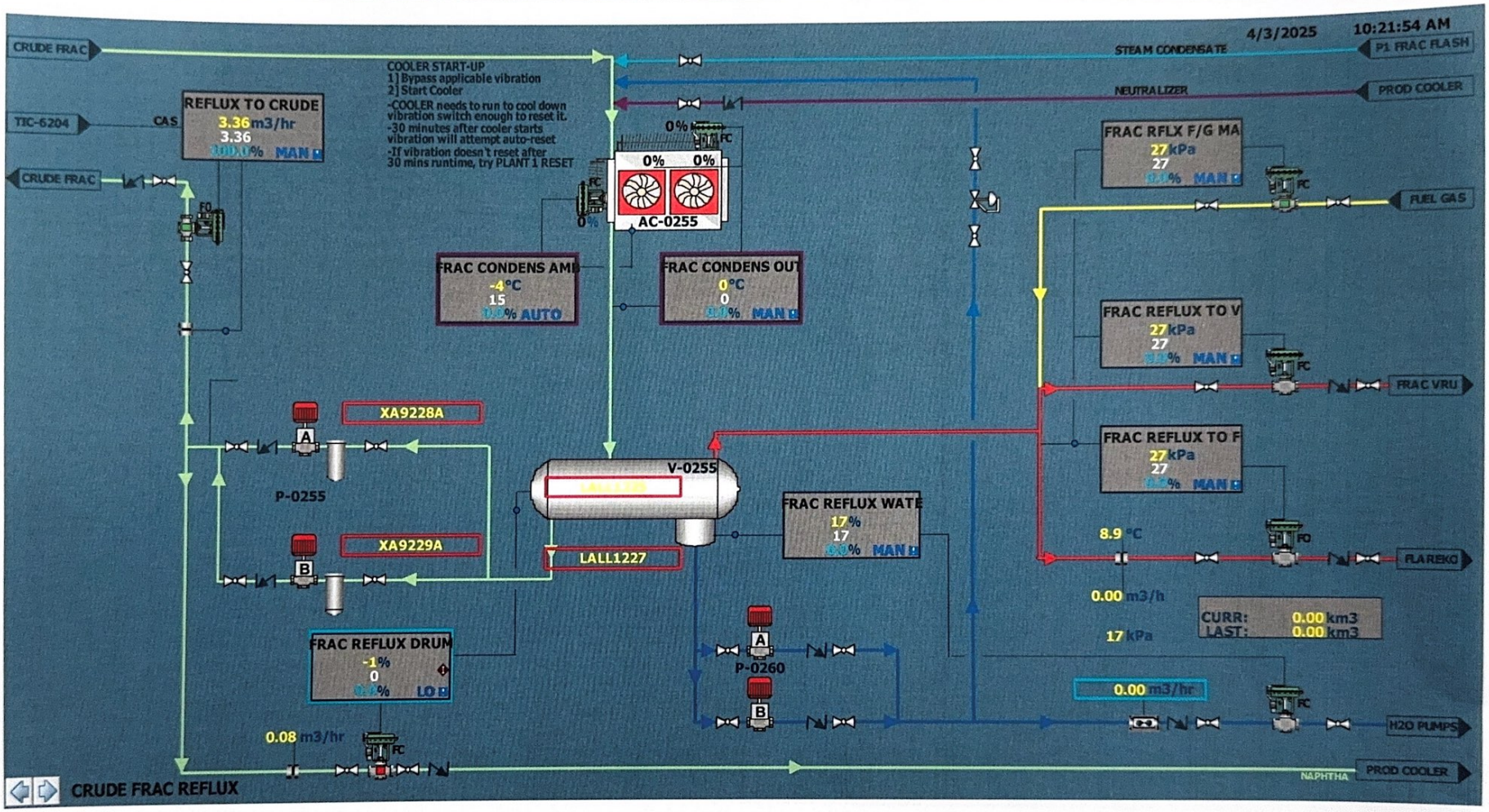
4/3/2025
10:21:54 AM
CRUDE FRAC
STEAM CONDENSATE
P1 FRAC FLASH
NEUTRALIZER
PROD COOLER
COOLER START-UP
1] Bypass applicable vibration
2] Start Cooler
-COOLER needs to run to cool down vibration switch enough to reset it.
-30 minutes after cooler starts vibration will attempt auto-reset
-If vibration doesn't reset after 30 mins runtime, try PLANT 1 RESET
REFLUX TO CRUDE
3.36 m3/hr
3.36
MAN
TIC-6204
CAS
CRUDE FRAC
AC-0255
FRAC CONDENS AMB
-4 °C
15
AUTO
FRAC CONDENS OUT
0 °C
0
MAN
FRAC RFLX F/G MA
27 kPa
27
MAN
FUEL GAS
FRAC REFLUX TO V
27 kPa
27
MAN
FRAC VRU
FRAC REFLUX TO F
27 kPa
27
MAN
XA9228A
XA9229A
P-0255
V-0255
LALL1227
FRAC REFLUX WATE
17 %
17
MAN
8.9 °C
FLARE KO
0.00 m3/h
17 kPa
CURR: 0.00 km3
LAST: 0.00 km3
FRAC REFLUX DRUM
-1 %
0
LO
P-0260
0.00 m3/hr
H2O PUMPS
0.08 m3/hr
NAPHTHA
PROD COOLER
CRUDE FRAC REFLUX

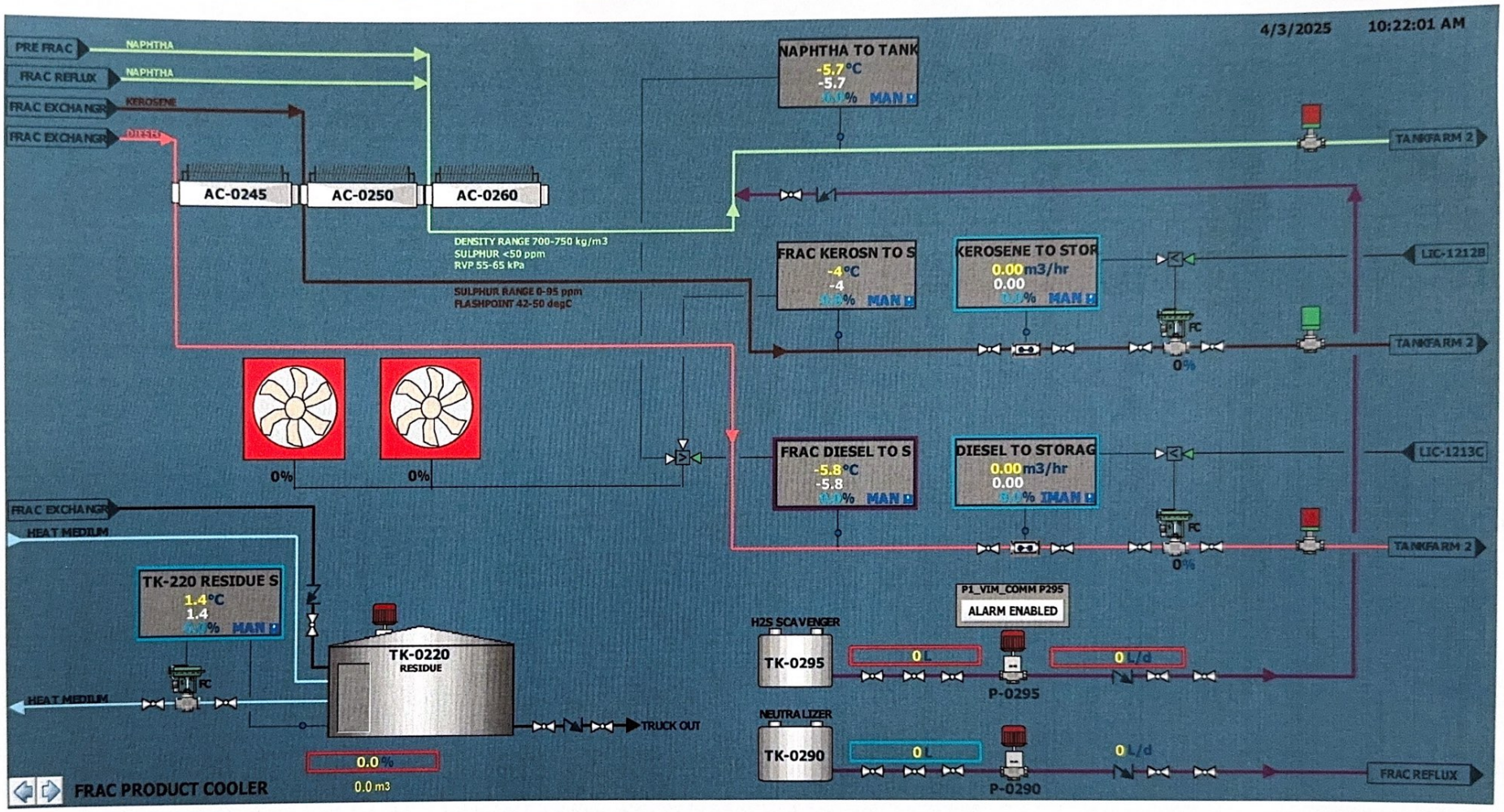
4/3/2025
10:22:01 AM
PRE FRAC
NAPHTHA
FRAC REFLUX
NAPHTHA
FRAC EXCHANGR
KEROSENE
FRAC EXCHANGR
DIESEL
AC-0245
AC-0250
AC-0260
NAPHTHA TO TANK
-5.7 °C
-5.7
MAN
TANKFARM 2
DENSITY RANGE 700-750 kg/m3
SULPHUR <50 ppm
RVP 55-65 kPa
SULPHUR RANGE 0-95 ppm
FLASHPOINT 42-50 degC
FRAC KEROSN TO S
-4 °C
-4
MAN
KEROSENE TO STOR
0.00 m3/hr
0.00
MAN
LIC-1212B
FC
0%
TANKFARM 2
0%
0%
FRAC DIESEL TO S
-5.8 °C
-5.8
MAN
DIESEL TO STORAG
0.00 m3/hr
0.00
MAN
LIC-1213C
FC
0%
TANKFARM 2
FRAC EXCHANGR
HEAT MEDIUM
TK-220 RESIDUE S
1.4 °C
1.4
MAN
FC
HEAT MEDIUM
TK-0220
RESIDUE
TRUCK OUT
0.0 %
0.0 m3
P1_VIM_COMM P295
ALARM ENABLED
H2S SCAVENGER
TK-0295
0 L
0 L/d
P-0295
NEUTRALIZER
TK-0290
0 L
0 L/d
P-0290
FRAC REFLUX
FRAC PRODUCT COOLER

[redacted]

PROCESS DESIGN BASIS

[redacted]

0	Jan 31, 2020	Issued for Use (TW19GP0001)			
A	Sept 2, 2019	Issued for Review	MA	TK	AR
Rev	**Issue Date**	**Reason of Issue**	**Prepared**	**Checked**	**Approved**

This document contains confidential and proprietary information and shall not be used without the expressed written permission of Thermo Design Engineering Ltd.

1. Scope of Work 4
1.1 Units of Measurement....5
1.2 Reference Standard Conditions 5
2. Process Description....6
3. Process Design Basis....8
3.1 Definition of Battery Limits....8
3.1.1 Tie Points (unit 570)....8
3.1.2 Tie Points (unit 390)....8
3.2 Plant Feed Conditions 9
3.3 Plant Operating Scenarios.... 10
3.4 Plant Turndown.... 10
3.5 Combined Feed Composition 11
3.5.1 Westbrick 12
3.5.2 Baccalieu 13
3.5.3 Plant 2 Condensate 14
3.5.4 Plant 3 Condensate 15
3.5.5 Feedstock Contaminants 16
3.6 Product Specifications 17
4. Design Margins....18
5. Equipment Sparing Philosophy....19
6. Ambient Conditions & Seismic Data....20
7. Process Utilities 21
7.1 New Utility Systems 21
7.1.1 Vapour Recovery Unit....21
7.2 Existing Utility Systems.... 21
7.2.1 Flare....21
7.2.2 Instrument Air 22
7.2.3 LP Steam 22
7.2.4 Fuel Gas 22

This document contains confidential and proprietary information and shall not be used without the expressed written permission of Thermo Design Engineering Ltd.

7.2.5 Cooling Glycol 22
7.2.6 Heat Medium 23
7.2.7 Closed Drain System 23

This document contains confidential and proprietary information and shall not be used without the expressed written permission of Thermo Design Engineering Ltd.

[redacted]

1. SCOPE OF WORK

The scope of the Project will comprise the following processing units to be installed at the existing Brazeau River Complex (BRC) site:

- Crude Oil Feed Pumps (SK-236)
- Metering Package (SK-238)
- Pre-Heat Exchangers (SK-231)
- Fractionator Flash Drum / Feed Pumps & Exchangers (SK-232)
- Crude Feed Heater & Fuel Train (H-0235)
- Crude Fractionator (T-0240)
- Fractionator Stripping Columns and Reflux System (SK-233)
- Product Coolers; Naphtha, Kerosene, Diesel (AC-0245, 0250, 0260)
- Atmospheric Residue Storage Tank (TK-0220)
- Vapour Recovery Unit (PK-270)
- Chemical Injection Packages – Qty.2 (PK-290)
- Provision for Future Addition of Crude Oil Desalting (pipe rack and plot space allocation)

In addition, the scope of work also includes the following process engineering evaluation of the existing BRC stabilization unit which is being repurposed as a prefractionation unit:

- Process Simulation
- Prefractionator Tray Re-rate
- Prefractionator Reboiler Re-rate
- Prefractionator Condenser Re-rate
- Control Valve Re-rate

The following utilities and systems will be required to support the operation of the new plant facility. These utilities already exist at the Brazeau River Complex Gas Plant:

- Crude Oil Feed Storage Tank & Product Storage Tanks (Naphtha, Kerosene, Diesel)
- Flare & Drain System
- LP Steam
- Instrument Air
- Fuel Gas
- Cooling Glycol
- Heat Medium

This document contains confidential and proprietary information and shall not be used without the expressed written permission of Thermo Design Engineering Ltd.

[redacted]

The primary system of measurement used on Project drawings will be SI units. When shown, the secondary Imperial unit measurement will be in brackets.

The following units of measurements will be used:

Analysis	% or ppm
Diameter	inches (Piping & Vessel Nozzles)
Density	kg/m^3
Duty	kW
Energy	kJ
Flow (Gas/Vapour)	Sm^3/hr or Sm^3/d
Flow (Liquid)	Am^3/h or Sm^3/h
Flow (Steam Vapour)	kg/hr
Force	N
Level	0%-100% or mm
Length	m or mm
Power	kW
Pressure (Absolute)	kPaa
Pressure (Differential)	kPa
Pressure (Gauge)	kPag
Pressure (Vacuum)	kPa vac
Rotation	rpm
Temperature	°C
Velocity	m/s
Viscosity	cP
Volume	m^3
Weight	kg
Gas	% LEL or ppm H_2S

1.2 Reference Standard Conditions

The standard temperature and pressure to which gas and/or vapour volumes are to be referenced will be 15°C and 101.325 kPaa.

The standard temperature to which liquid volumes are to be referenced will be 15°C.

This document contains confidential and proprietary information and shall not be used without the expressed written permission of Thermo Design Engineering Ltd.

[redacted]

2. PROCESS DESCRIPTION

The BRC Plant 1 Stabilizer Revamp project will use existing and new equipment to fractionate light crude oil into naphtha, kerosene, diesel, and atmospheric residue products.

Blended crude oil (referred to as “combined feed”) is comprised of Baccalieu crude, Westbrick crude, Plant 2 condensate and Plant 3 condensate. The trucked in feed is stored in an existing atmospheric storage tank and is connected to the Crude Feed Pumps which boost the pressure of the crude and direct it into the pre-heat equipment.

First, the crude flows through the Feed-Kerosene Exchanger, which preheats the crude via heat exchange with hot Kerosene product from the Fractionator. Bypass temperature control is utilized to control the temperature of the crude feeding the downstream Prefractionator.

From the Feed-Kerosene Exchanger the crude then flows through the Feed-Residue Exchanger, increasing in temperature via heat exchange with hot residue. The Feed-Residue Exchanger incorporates a hot-side bypass to ensure the residue is not over cooled in the exchanger resulting in excessive residue viscosities. The bypass is not utilized during normal operation.

Downstream of the Feed-Residue Exchanger there are provisional connections provided to allow a future Desalter to be added to the process. Salt concentrations in the downstream equipment must be maintained below a concentration of 10 pounds per thousand barrels (PTB) in order to avoid excessive corrosion in the downstream fractionation process. At high temperatures the chlorine component of the salt will react to form hydrochloric acid. Initial plant operation will based on sourcing a crude oil feedstock with salt concentrations below 10 PTB however the provision to add a future Desalter has been considered which would allow a wider range of potential plant feed compositions.

Crude oil from the Feed-Residue Exchanger then flows to the Feed-Diesel Exchanger for the final stage of pre-heat prior to feeding the Prefractionator. Through heat exchange with the hot diesel product the crude oil is heated to approximately 110°C as a feed to the Prefractionator.

The Prefractionator is utilized to remove light ends from the crude oil and prevents excessive vapour traffic in the downstream Fractionator. The Prefractionator is a reboiled and refluxed distillation tower which was formerly the Plant 1 Condensate Stabilizer. The tower, reflux drum, reflux pumps, overhead condenser, bottoms pumps, fired reboiler, piping, and most associated instrumentation, are existing equipment which have been repurposed for this project.

The Prefractionator removes Light straight run naphtha from the crude as an overhead product from the tower overhead reflux system. The light naphtha is then mixed with the heavier naphtha from the Fractionator and is directed to the Naphtha Cooler where the combined naphtha product is cooled prior to storage. Any residual water collected in the Prefractionator Reflux Drum is separated from the light naphtha and directed to the facility produced water system.

The Prefractionator bottom crude product exits under level control at a temperature of approximately 225°C. A small slip stream of light naphtha from the Prefractionator reflux system is mixed through flow control with the bottom crude product upstream of the Fractionator Flash Drum. The light naphtha partially flashes when mixing with the hot crude bottoms stream and is separated from the bulk liquid phase in the Fractionator Flash

This document contains confidential and proprietary information and shall not be used without the expressed written permission of Thermo Design Engineering Ltd.

Drum prior to flowing under pressure control to tray #18 of the Fractionator. Vapour from the flash drum provides additional stripping vapour to the upper portions of the Fractionator tower and allows operations the ability to control this stripping rate by manipulating the flow control setpoint of the light naphtha being introduced upstream of the Fractionator Flash Drum.

Liquids from the Fractionator Flash Drum are the primary feed to the Fractionator. The crude is pumped through the Fractionator Feed-Residue Exchanger where they are further preheated prior to flowing into the Crude Feed Heater.

The Crude Feed Heater increases the temperature of the crude to approximately 350°C, resulting in approximately 75% vapourization (mass basis). The two-phase mixture from the heater is then introduced as the primary feed to the Fractionator.

The Fractionator is a refluxed distillation column which forms the heart of the process. This tower uses trays and structured packing to facilitate mass transfer between falling liquid and rising vapour, enabling the separation and purification of the crude feed into heavy naphtha, kerosene, diesel, and atmospheric residue. The distillate products (kerosene and diesel) are withdrawn from different trays in the fractionator under flow control, with rates adjusted to maintain product quality.

The heavy naphtha is condensed from the tower overhead vapours using the Fractionator Condenser, along with a small amount of condensed water which is derived from the introduction of steam utilized for stripping the liquid products. The naphtha is separated from the steam condensate in the Fractionator Reflux Drum. A portion of the naphtha is pumped back to the top of the Fractionator as reflux, while the remainder is blended with light naphtha from the Prefractionator and is then cooled and metered prior to flowing to the Naphtha Storage Tank.

Kerosene and diesel are drawn from intermediate points on the Fractionator. These products flow through the Kerosene Stripper and Diesel Stripper, respectively. The liquid product flows through the stripper countercurrent to superheated steam. The steam strips light ends from the products and this stripper overhead stream is then reintroduced to the Fractionator as hydrocarbon-saturated stream. The kerosene and diesel flow from the bottom of each stripper into the Kerosene Product Pump and Diesel Product Pump (respectively). These two streams are sent back to the Feed-Kerosene Exchanger and Feed-Diesel Exchanger (respectively) for heat exchange with incoming cold crude oil. The kerosene and diesel then flow through a product cooler prior to being metered and directed to product storage.

Steam is also added below the Fractionator flash zone to increase the purity of residue product and increase the flash point. Atmospheric residue is the final liquid product, which flows out the bottom of the fractionator at a temperature of approximately 310°C. The residue is pumped, using the Atmospheric Residue Pump, through the Steam Superheater. This superheats the LP steam for utilization in the Fractionator and also cools the residue prior to further cooling steps in the Fractionator Feed-Residue Exchanger and Feed-Residue Exchanger. The residue then flows to the Atmospheric Residue Storage Tank where the product is periodically exported via truck.

This document contains confidential and proprietary information and shall not be used without the expressed written permission of Thermo Design Engineering Ltd.

[redacted]

3. PROCESS DESIGN BASIS

3.1 Definition of Battery Limits

The required battery limit process and utilities tie points are identified as follows.

3.1.1 Tie Points (unit 570)

The following table defines the TWM [redacted] tie points for the storage area - Unit 570.

TP #	Size / Rating	Description	Location
5701	2" / 150#	Instrument Air	SK-236
5703	2" / 150#	Minimum Flow Recycle	SK-236
5704	4" / 150#	Crude Feed Pump Inlet	SK-236
5706	3" / 150#	Crude Feed Pump Outlet	SK-236
5707	2" / 150#	Instrument Air	SK-238
5708	2" / 150#	Diesel to Metering	SK-238
5709	2" / 300#	Kerosene to Metering	SK-238
5710	2" / 150#	Naphtha to Metering	SK-238
5711	2" / 150#	Diesel to Storage	SK-238
5712	2" / 150#	Kerosene to Storage	SK-238
5713	2" / 150#	Naphtha to Storage	SK-238
5714	3" / 150#	Off-Spec to Sales Oil Tank	SK-238

3.1.2 Tie Points (unit 390)

The following table defines the TWM [redacted] tie points for the process area - Unit 390.

TP #	Size / Rating	Description	Location
3901	3" / 150#	From Crude Feed Pump	Rack Interface
3902	3" / 150#	Feed to Prefractionator	Rack Interface
3903	3" / 150#	Feed to Fractionator Flash Drum	Rack Interface
3904	2" / 150#	Naphtha from Prefractionator	Rack Interface
3905	2" / 150#	Sour Water to Flash Vessel	Rack Interface
3907	3" / 150#	Naphtha to Storage	Rack Interface
3908	2" / 300#	Kerosene to Storage	Rack Interface
3909	2" / 150#	Diesel to Storage	Rack Interface
3910	3" / 150#	Off-Gas from Prefractionator	Rack Interface
3912	2" / 150#	NGL to Stabilizer	Rack Interface
8001	8" / 150#	LP Flare	Rack Interface
8002	2" / 150#	Closed Drain	Rack Interface
8003	2" / 150#	Instrument Air	Rack Interface
8004	2" / 150#	LP Fuel Gas	Rack Interface
8005	3" / 150#	Cooling Glycol Supply	Rack Interface
8006	3" / 150#	Cooling Glycol Return	Rack Interface
8007	2" / 150#	Heat Medium Supply	Rack Interface
8008	2" / 150#	Heat Medium Return	Rack Interface
8009	2" / 150#	LP Steam	Rack Interface

This document contains confidential and proprietary information and shall not be used without the expressed written permission of Thermo Design Engineering Ltd.

[redacted]

3.2 Plant Feed Conditions

Feed	Crude Oil / Condensate
Design Basis Feed Composition[1]	Based on the following blend: 1) Westbrick Oil = 1191 bbl/d 2) Baccalieu Oil = 501 bbl/d 3) Plant 2 Condensate = 356 bbl/d 4) Plant 3 Condensate = 131 bbl/d
Plant Design Feed Rate	346 Sm3/d (2178 bbl/d)
Feed Density @ Std. Conditions[2]	45°API
Recommended Density Range[3]	40°API to 50°API
Feed Location	TP-5704 Upstream of Crude Feed Pumps
Temperature Range	-10°C to 32°C
Pressure	Atmospheric

Notes:

1) Reference Section 3.5 for properties of individual plant feedstocks
2) Based on density of blended feedstock
3) Plant has been designed considering a feed density of 45°API, however the design is sufficiently flexible to allow a variance of approximately +/- 5°API.

This document contains confidential and proprietary information and shall not be used without the expressed written permission of Thermo Design Engineering Ltd.

[redacted]

3.3 Plant Operating Scenarios

Two seasonal operating cases are envisaged, summer and winter. This affects the combined feed temperature at the inlet of the plant and the design of the feed preheating heat exchanger system.

	Case 1	Case 2
Description	Summer - Normal	Winter - Normal
Combined Feed Storage Temperature	32°C	-10°C

3.4 Plant Turndown

The plant is designed for 2:1 turndown (mass basis) of total feed. Turndown below 2:1 can result in flashing at the inlet of the Crude Feed Heater due to a pressure reduction in the coil and subsequently increased vapour fractions leading to flow instability.

This document contains confidential and proprietary information and shall not be used without the expressed written permission of Thermo Design Engineering Ltd.

[redacted]

3.5 Combined Feed Composition

The crude oil feed to the facility will be trucked into an existing atmospheric storage tank. The Fractionation unit has been designed based on a blend of four different crude oils and condensates:

- Westbrick
- Baccalieu
- Plant 2 Condensate
- Plant 3 Condensate

Laboratory analysis data for these feedstocks was provided by [redacted] to [redacted] This lab analysis data formed the basis of the simulation input with certain modifications considered to better simulate the actual anticipated unit performance and to compensate for assumptions made by the simulation software.

The individual feedstocks are defined in the process simulation using the following data:

This document contains confidential and proprietary information and shall not be used without the expressed written permission of Thermo Design Engineering Ltd.

[redacted]

3.5.1 Westbrick

Bulk Data

API Gravity = 45.3
Total Sulfur = 0.21 Mass%

ANALYSIS OF LIGHT ENDS

Comp.	Mole Fraction
N2	0.0000
CO2	0.0000
H2S	0.0000
C1	0.0001
C2	0.0028
C3	0.0183
iC4	0.0134
nC4	0.0400
iC5	0.0354
nC5	0.0469
C6	0.0901
C7+	0.7530

ANALYSIS OF C6+

Carbon Number	Mole Fraction	Boiling Point Range (°C)
C6	0.0824	36. - 69.
C7	0.0700	69. - 98.
C8	0.0664	98. - 126.
C9	0.0520	126. - 151.
C10	0.0494	151. - 174.
C11	0.0380	174. - 196.
C12	0.0312	196. - 216.
C13	0.0264	216. - 235.
C14	0.0260	235. - 253.
C15	0.0233	253. - 271.
C16	0.0195	271. - 287.
C17	0.0211	287. - 302.
C18	0.0156	302. - 317.
C19	0.0112	317. - 331.
C20	0.0123	331. - 344.
C21	0.0110	344. - 356.
C22	0.0106	356. - 369.
C23	0.0097	369. - 380.
C24	0.0082	380. - 391.
C25	0.0079	391. - 402.
C26	0.0075	402. - 412.
C27	0.0070	412. - 422.
C28	0.0066	422. - 432.
C29	0.0058	432. - 441.
C30+	0.0186	441+
Aromatics Fractions		
C6H6	0.0112	80.
C7H8	0.0390	111.
C8H10	0.0309	136. - 139.
C8H10	0.0041	136.
C8H10	0.0268	138. - 139.
C8H10	0.0072	144.
C9H12	0.0083	169.
Naphthenes Fractions		
C5H10	0.0077	49.
C6H12	0.0200	72.
C6H12	0.0266	81.
C7H14	0.0545	101.

This document contains confidential and proprietary information and shall not be used without the expressed written permission of Thermo Design Engineering Ltd.

[redacted]

3.5.2 Baccalieu

API Gravity = 39.3
Total Sulfur = 0.11 Mass%

ANALYSIS OF LIGHT ENDS

Comp.	Mole Fraction
N2	0.0010
CO2	0.0003
H2S	0.0003
C1	0.0037
C2	0.0031
C3	0.0140
iC4	0.0049
nC4	0.0288
iC5	0.0209
nC5	0.0322
C6	0.0613
C7+	0.8295

ANALYSIS OF C6+

Carbon Number	Mole Fraction	Boiling Point Range (°C)
C6	0.0552	36. - 69.
C7	0.0640	69. - 98.
C8	0.0653	98. - 126.
C9	0.0590	126. - 151.
C10	0.0557	151. - 174.
C11	0.0462	174. - 196.
C12	0.0381	196. - 216.
C13	0.0377	216. - 235.
C14	0.0349	235. - 253.
C15	0.0300	253. - 271.
C16	0.0259	271. - 287.
C17	0.0289	287. - 302.
C18	0.0225	302. - 317.
C19	0.0138	317. - 331.
C20	0.0176	331. - 344.
C21	0.0133	344. - 356.
C22	0.0136	356. - 369.
C23	0.0130	369. - 380.
C24	0.0112	380. - 391.
C25	0.0108	391. - 402.
C26	0.0106	402. - 412.
C27	0.0098	412. - 422.
C28	0.0087	422. - 432.
C29	0.0084	432. - 441.
C30+	0.0656	441+
Aromatics Fractions		
C6H6	0.0054	80.
C7H8	0.0153	111.
C8H10	0.0131	136. - 139.
C8H10	0.0040	136.
C8H10	0.0091	138. - 139.
C8H10	0.0042	144.
C9H12	0.0065	169.
Naphthenes Fractions		
C5H10	0.0061	49.
C6H12	0.0230	72.
C6H12	0.0166	81.
C7H14	0.0408	101.

This document contains confidential and proprietary information and shall not be used without the expressed written permission of Thermo Design Engineering Ltd.

[redacted]

3.5.3 Plant 2 Condensate

API Gravity = 50.5
Total Sulfur = 0.13 Mass%

ANALYSIS OF LIGHT ENDS

Comp.	Mole Fraction
N2	0.0002
CO2	0.0003
H2S	0.0000
C1	0.0307
C2	0.0022
C3	0.0004
iC4	0.0001
nC4	0.0007
iC5	0.0071
nC5	0.0228
C6	0.1446
C7+	0.7909

ANALYSIS OF C6+

Carbon Number	Mole Fraction	Boiling Point Range (°C)
C6	0.1330	36. - 69.
C7	0.1157	69. - 98.
C8	0.0984	98. - 126.
C9	0.0722	126. - 151.
C10	0.0668	151. - 174.
C11	0.0467	174. - 196.
C12	0.0319	196. - 216.
C13	0.0245	216. - 235.
C14	0.0175	235. - 253.
C15	0.0149	253. - 271.
C16	0.0102	271. - 287.
C17	0.0114	287. - 302.
C18	0.0077	302. - 317.
C19	0.0049	317. - 331.
C20	0.0058	331. - 344.
C21	0.0050	344. - 356.
C22	0.0047	356. - 369.
C23	0.0042	369. - 380.
C24	0.0037	380. - 391.
C25	0.0036	391. - 402.
C26	0.0035	402. - 412.
C27	0.0034	412. - 422.
C28	0.0031	422. - 432.
C29	0.0029	432. - 441.
C30+	0.0099	441+
Aromatics Fractions		
C6H6	0.0131	80.
C7H8	0.0317	111.
C8H10	0.0392	136. - 139.
C8H10	0.0046	136.
C8H10	0.0346	138. - 139.
C8H10	0.0089	144.
C9H12	0.0134	169.
Naphthenes Fractions		
C5H10	0.0116	49.
C6H12	0.0319	72.
C6H12	0.0250	81.
C7H14	0.0551	101.

This document contains confidential and proprietary information and shall not be used without the expressed written permission of Thermo Design Engineering Ltd.

[redacted]

3.5.4 Plant 3 Condensate

API Gravity = 49.5
Total Sulfur = 0.14 Mass%

ANALYSIS OF LIGHT ENDS

Comp.	Mole Fraction
N2	Trace
CO2	0.0003
H2S	0.0000
C1	0.0064
C2	0.0052
C3	0.0156
iC4	0.0068
nC4	0.0231
iC5	0.0219
nC5	0.0356
C6	0.1027
C7+	0.7824

ANALYSIS OF C6+

Carbon Number	Mole Fraction	Boiling Point Range (°C)
C6	0.0945	36. - 69.
C7	0.1165	69. - 98.
C8	0.1097	98. - 126.
C9	0.0741	126. - 151.
C10	0.0585	151. - 174.
C11	0.0370	174. - 196.
C12	0.0252	196. - 216.
C13	0.0188	216. - 235.
C14	0.0154	235. - 253.
C15	0.0140	253. - 271.
C16	0.0104	271. - 287.
C17	0.0108	287. - 302.
C18	0.0077	302. - 317.
C19	0.0054	317. - 331.
C20	0.0060	331. - 344.
C21	0.0052	344. - 356.
C22	0.0051	356. - 369.
C23	0.0046	369. - 380.
C24	0.0040	380. - 391.
C25	0.0039	391. - 402.
C26	0.0038	402. - 412.
C27	0.0035	412. - 422.
C28	0.0035	422. - 432.
C29	0.0030	432. - 441.
C30+	0.0102	441+
Aromatics Fractions		
C6H6	0.0117	80.
C7H8	0.0343	111.
C8H10	0.0363	136. - 139.
C8H10	0.0054	136.
C8H10	0.0309	138. - 139.
C8H10	0.0077	144.
C9H12	0.0109	169.
Naphthenes Fractions		
C5H10	0.0082	49.
C6H12	0.0313	72.
C6H12	0.0268	81.
C7H14	0.0671	101.

This document contains confidential and proprietary information and shall not be used without the expressed written permission of Thermo Design Engineering Ltd.

[redacted]

3.5.5 Feedstock Contaminants

Contaminant Name	Amount
Salt, lb/1000bbl (PTB) NOTE 1	< 10
Hydrogen Sulphide, ppmw	50
Total Sulphur, wt% NOTE 2	0.17
Water	No Free Water
Acids (TAN) mg KOH/g NOTE 2	0.06
Carbonyl Sulphide, ppmw	None
Total Mercaptans, mg/Sm³	None
Oxygen	None
Mercury, µg/m3	None
Asphaltenes	None
Methanol	None
Glycols	None
Lubrication Oils	None
Corrosion Inhibitors	None

Notes:

1) Salt concentrations in the Crude feedstock must be maintained below a concentration of 10 pounds per thousand barrels (PTB) in order to avoid excessive corrosion in the downstream fractionation process. At the high operating temperatures of the Fractionator the chlorine component of the salt will react to form hydrochloric acid and result in high corrosion rates in the Fractionator and overheads reflux system. [redacted] has made design provisions in the Fractionation unit to allow for the future addition of a Desalter package.

2) Based on weighted average of feed sample analysis (Nov 6, 2019 sample dates)

3) Of the lab analysis provided by TWM only Baccalieu analysis contained H2S (100 ppmw). The blended average concentration resulted in an H2S composition of 12 ppmw. As a conservative design approach [redacted] has considered 50 ppmw H2S in the combined feed.

This document contains confidential and proprietary information and shall not be used without the expressed written permission of Thermo Design Engineering Ltd.

3.6 Product Specifications

The Crude Fractionation Unit has been designed to generate products with specifications as outlined in the below table. These are intermediate products which will require additional refining in order to achieve typical overall sales quality specifications.

Naphtha[1,2]	**Specifications**
Max RVP at 37.8°C	69 kPaa (10 psia)
Production Rate[4]	998 SBPD
Saturated Water Content	0.01 vol%
Product Temperature	43°C
Kerosene	**Specifications**
Min Flash Point	65°C
ASTM D-86 10% Cut Point	190 - 220°C
ASTM D-86 90% Cut Point	260 - 290°C
Production Rate[5]	570 SBPD
Saturated Water Content	0.03 vol%
Product Temperature	43°C
Diesel	**Specifications**
Min Flash Point	65°C
ASTM D-86 10% Cut Point	310 - 330°C
ASTM D-86 90% Cut Point	390 - 420°C
Production Rate[5]	300 SBPD
Saturated Water Content	0.03 vol%
Product Temperature	43°C
Residue	**Specifications**
Min Flash Point	200°C
Production Rate[4]	285 SBPD
Saturated Water Content	0.03 vol%
Product Temperature[3]	80°C

1) Naphtha is the combined product between light naphtha from the Prefractionator and heavy naphtha from the Crude Fractionator.
2) Combined Naphtha product will contain trace amounts of dithiazine and amine. These are byproducts of the upstream H2S scavenger injection.
3) Residue product kept at 80°C to maintain low viscosity for transportation.
4) Product rates shown based on design basis combined feed composition.

This document contains confidential and proprietary information and shall not be used without the expressed written permission of Thermo Design Engineering Ltd.

[redacted]

4. DESIGN MARGINS

Specific equipment overdesign criteria that will be utilized for design of new equipment are shown below:

Equipment	Overdesign Factor
General	
Line Sizing	No Margin
Vessels	
Separators	No Margin
Filter Internals	No Margin
Tower Internals	No Margin
Pumps	
Centrifugal Pumps	No Margin
Positive Displacement Pumps	No Margin
Heat Exchangers	
Shell and Tube Exchangers	No Margin
Air Coolers, Condensing Service	No Margin
Air Coolers, Non-condensing Service	No Margin
Fired Heater	40%
Plate and Frame Exchanger	No Margin
Compressors	
Vapour Recovery Compressor	300%

Notes:

1) Design margin included for heater due to potential uncertainty in plant feed compositions and resultant mass flow variation to heater. There will be variable mass reduction through Prefractionation Unit and in Fractionator Flash Drum depending on feed compositions.
2) Off-gas rates from Prefractionator and Fractionator are highly sensitive to process and compositional variability. The combined off-gas rates is expected to have intermittent fluctuations. Unit design rate has minimal impact on unit CAPEX and therefore a conservative design rate has been considered in order to minimize intermittent flaring.

This document contains confidential and proprietary information and shall not be used without the expressed written permission of Thermo Design Engineering Ltd.

5. EQUIPMENT SPARING PHILOSOPHY

The minimum sparing philosophy applied for the main process and utility equipment will be as follows:

Equipment Type	Sparing Configuration
Vessels	No Spare
Columns	No Spare
Heat Exchangers	No Spare
Reboilers	No Spare
Heaters	No Spare
Air Coolers	No Spare
Filters	N + 1 (Note 1)
Pumps	N + 1 (Note 2,4)
Fans (for air coolers)	No Spare
PSVs	No spare
Control Valves	No Spare
Vapour Recovery Unit	No Spare

Notes:

1) No spare considered in scenario where filter can be put off-line and bypassed for the time necessary for filter replacement.
2) Only main process pumps in continuous operation or safety service pumps provided with 100% standby. Equipment auxiliary pumps and pumps in intermittent service not provided with 100% spare.

This document contains confidential and proprietary information and shall not be used without the expressed written permission of Thermo Design Engineering Ltd.

6. AMBIENT CONDITIONS & SEISMIC DATA

Design Parameter		Design Value
Design Maximum Ambient Temperature		35 °C
Design Minimum Ambient Temperature		-40 °C
Precipitation	One Day Rain (1/50)	80 mm
	Annual Rain	450 mm
Site Elevation		925 m
Site Location		LSD: 4-31-48-12 W5
Average Barometric Pressure		90.8 kPaa
Snow Loads		Ss = 2.1 kPa Sr = 0.1 kPa
Wind Loads		q10 = 0.36 kPa q50 = 0.46 kPa
Frost Depth (max)		1 m
Seismic Data	Sa (0.2)	0.15
	Sa (0.5)	0.083
	Sa (1.0)	0.038
	Sa (2.0)	0.021
	Importance Factor	1.000
Site Class		NBC 2010, Site Class C

This document contains confidential and proprietary information and shall not be used without the expressed written permission of Thermo Design Engineering Ltd.

[redacted]

7. PROCESS UTILITIES

7.1 New Utility Systems

7.1.1 Vapour Recovery Unit

Parameter	Pressure (kPag)	Temperature (°C)
Mechanical Design[2]	1034	93 / -29
Inlet Gas (sour)[1]	49.6 Sm3/h @ 7 kPag	
Discharge Gas (sour) [1]	22.4 Sm3/h @ 375 kPag	
Discharge NGL (sour) [1]	3.0 Sm3/day @ 1500 kPag	

Notes:

1) Conditions based on winter case simulation based on steady state plant operation. Actual rates and pressures will fluctuate during plant operation.
2) Vapour recovery unit compressor is located inside a building.

7.2 Existing Utility Systems

Mechanical Design and operating conditions as referenced in following existing utilities section are based on tie point list provided by TWM on January 16, 2020.

7.2.1 Flare

Parameter	Pressure (kPag)	Temperature (°C)
Operating	ATM	ATM
Mechanical Design	350	125
Design Relief Rate	15,395 kg/hr	

Notes:

1) Design considers PSV relief and vents connecting to existing Plant 1 flare system. Re-rate of existing flare and flare network with the addition of new equipment is not included in [redacted] scope of work.
2) Maximum PSV relief rates from equipment in [redacted] scope of supply has been provided to SWAT projects for performing re-rate of existing flare system.
3) PSV design and selection has been based on the following:
    a. Continuous Flare Backpressure = Atmospheric
    b. Maximum Superimposed Backpressure = < 100 kPag

       PSV's with pressure setpoint less than 1000 kPag are of balanced bellows design.
    c. Built-up Backpressure = Based on [redacted] simulation of downstream flare piping. Estimation has been made for pressure drop imposed by existing flare / flare piping outside [redacted] scope of supply.

This document contains confidential and proprietary information and shall not be used without the expressed written permission of Thermo Design Engineering Ltd.

7.2.2 Instrument Air

Parameter	Pressure (kPag)	Temperature (°C)
Operating	700	30
Mechanical Design	1110	93
Normal Consumption	35.0 Sm3/hr	

Notes:

1) The instrument air will be provided at -40°C water dewpoint.

7.2.3 LP Steam

Parameter	Pressure (kPag)	Temperature (°C)
Operating	468	156
Mechanical Design	862	185
Normal Consumption[3]	410 kg/hr	

Notes:

1) LP is saturated steam at 345 kPag at [redacted] battery limit.
2) Steam consumed by the process and will be condensed and disposed to the produced water system.
3) Based on simulated steam rate. Actual steam rates may vary depending on requirements to manipulate product (kerosene, diesel, residue) flash points.

7.2.4 Fuel Gas

Parameter	Pressure (kPag)	Temperature (°C)
Operating	700	10
Mechanical Design	1034	66
Normal Consumption[2]	180 kg/hr	

Notes:

1) Fuel gas from existing LP fuel gas network to be utilized for fired heater and tank blanketing.
2) Rate does not include Prefractionator Reboiler consumption.
3) Rate based on LP fuel gas composition provided by [redacted] (MW=17.3)

7.2.5 Cooling Glycol

Parameter	Pressure (kPag)	Temperature (°C)
Operating	436	28°C Supply
Mechanical Design	827	65°C Sup. / 75°C Ret.
Normal Consumption	5620 kg/hr	

Notes:

This document contains confidential and proprietary information and shall not be used without the expressed written permission of Thermo Design Engineering Ltd.

1) Cooling glycol used for pump seal plan cooling and for process cooling in Vapour Recovery Unit.
2) 50 wt% EG considered.

7.2.6 Heat Medium

Parameter	Pressure (kPag)	Temperature (°C)
Operating	752	163 (supply)
Mechanical Design	1378	205
Normal Consumption	962 kg/hr	

Notes:

1) Heat medium used for winterization coil on Fractionator Condenser and Residue Tank heating coil.
2) 50 wt% EG considered.

7.2.7 Closed Drain System

Parameter	Pressure (kPag)	Temperature (°C)
Operating	ATM	ATM
Mechanical Design	350	93

Notes:

1) Site grade and location of equipment does not allow for sloped drain to existing closed drain system and therefore fuel gas will be used for pressurized draining of equipment to closed drain system.
2) Considering high operating temperatures in fractionation unit care must be taken in allowing fluid to cool prior to performing maintenance draining.

This document contains confidential and proprietary information and shall not be used without the expressed written permission of Thermo Design Engineering Ltd.