PIPING SYMBOLS

- BALL VALVE
- BUTTERFLY VALVE
- CHECK VALVE
- CHOKE VALVE
- GATE VALVE
- GLOBE VALVE
- NEEDLE VALVE
- INDICATOR VALVE
- 4-WAY VALVE
- 3-WAY VALVE
- ANGLE VALVE
- POSITIVE CHOKE
- ANGLE HAND CHOKE
- (PSV) VACUUM 3-WAY (SPRING)
- (PSV) ANGLE (SPRING OPERATED)
- (PSV) ANGLE (PILOT OPERATED)
- CONTROL VALVE
- 3-WAY CONTROL VALVE
- PRESSURE REGULATOR (SELF CONTAINED)
- PRESSURE REGULATOR (REMOTE SENSING)
- ANGLE CONTROL VALVE
- BUTTERFLY CONTROL VALVE

- VALVE WITH OPERATOR
- CONTROL VALVE W/PISTON ACTUATOR
- CONTROL VALVE W/POSITIONER
- CONTROL VALVE WITH W/ELECTROPNEUMATIC CONVERTER
- 3-WAY SOLENOID HAND VALVE
- MOTOR OPERATED VALVE
- SOLENOID VALVE
- BLEED RING
- SINGLE ACTING CYLINDER OPERATED VALVE
- DOUBLE ACTING CYLINDER OPERATED VALVE
- GAUGE VALVE
- CENTER OF GRAVITY

- CAP
- HOSE CONNECTION
- BLIND FLANGE OR LINE TERMINATION
- COUPLING CONNECTION
- INSULATING FLANGE
- BREAKOUT FLANGES
- OPEN SPECTACLE BLIND
- CLOSED SPECTACLE BLIND
- ORIFICE METER
- SKILLET
- ORIFICE FLANGE
- METER TUBE W/ORIFICE FLANGES
- TUBING VELOCITY CHECK
- FLOW STRAIGHTENING VANES
- STATIC MIXER
- INLINE CHOKE NIPPLE

- RUPTURE DISC (PSE)
- VACUUM BREAKER (PSE)
- FLAME ARRESTOR
- LINE SIZE CHANGE
- RESPONSIBILITY BREAK
- SPRAY NOZZLE
- HORN
- EJECTOR
- FRSV
- TRAP (PROCESS)
- OPEN DRAIN SYSTEM
- CENTRIFIGUAL PUMP
- POSITVE DISPLACEMENT PUMP

- CORROSION COUPON
- EQUIPMENT INSULATION
- INSULATION
- INSULATION W/HEAT TRACE (ET-ELECTRICALLY TRACED) (ST-STEAM TRACED)
- CONE STRAINER
- Y-STRAINER
- Y-STRAINER W/ BALL VALVE
- BASKET STRAINER
- JACKETED PIPE
- HOSE
- S.S. BRAIDED HOSE
- DRESSER (TYPE) COUPLING
- METRAFLEX COUPLING
- EXPANSION BELLOWS
- EXPANSION JOINT
- SILENCER

- PULSATION DAMPENER SUCTION STABILIZER
- V-CONE METER
- FLOW ELEMENT (QUICK CHANGE ORIFICE PLATE)
- ULTRASONIC METER
- ROTAMETER
- MASS FLOW METER
- POSITIVE DISPLACEMENT METER LOCAL TOTALIZING
- FLOW ELEMENT (VORTEX)
- FLOW ELEMENT (TURBINE)
- FLOW ELEMENT (VENTURI OR NOZZLE)
- SPEC BREAK

INSTRUMENT IDENTIFIERS

- DIAPHRAGM, SPRING OPPOSED
- DIAPHRAGM, PRESSURE BALANCED
- SOLENOID
- UNCLASSIFIED (INFORMATION TO BE WRITTEN ADJACENT TO SYMBOL)
- MOTOR OPERATED VALVE (MOV) SPECIAL VALVE (XV)
- HAND ACTUATOR
- CYLINDER, PISTON OPERATED
- CYLINDER, PISTON OPERATED SPRING RETURN
- FAILURE POSITION UPON LOSS OF SIGNAL: FO = FAIL OPEN, FC = FAIL CLOSED, FL = FAIL LOCKED, ACTION RESULTING FROM SIGNAL: AO = AIR TO OPEN, AC = AIR TO CLOSE
- CYLINDER OPERATED (UNCLASSIFIED)
- SPRING LOADED PISTON OPERATED VALVE WITH SWITCH (UNCLASSIFIED)
- SPRING LOADED PISTON OPERATED VALVE WITHOUT SWITCH (UNCLASSIFIED)
- ELECTROHYDRAULIC
- ACTUATOR WITH POSITIONER
- ACTUATOR WITH HANDWHEEL

LINE TYPES AND FLAGS

- MAIN PROCESS LINE
- UTILITY LINES, BYPASSES & MINOR PROCESS LINES
- PACKAGE, MODULE BOUNDARIES OR BATTERY LIMITS
- PNEUMATIC SIGNAL
- CAPILLARY TUBING
- HYDRAULIC SIGNAL
- SOFTWARE LINK
- ELECTRICAL SIGNAL
- ELECTRICAL TRACING (ET)
- LINE NUMBER & SHEET CONTINUATION (LINE NUMBER 002)
- TO NEXT SHEET
- FLOW DIRECTION ARROW
- TUBING BULK HEAD CONNECTOR
- TERMINAL CONNECTION
- TIE-IN (TIE-IN XXX, NO:-)
- SPECIALTY ITEM (SP ?)

JOB NUMBERS

CERTIFIED PROJECT MANAGER
NAME: DATE:

REVISION HISTORY

NO.	DATE	BY	CHK'D	APP'D	DESCRIPTION
0	08/16/21	MS			ISSUED FOR CONSTRUCTION

INSTRUMENT TAG NOMENCLATURE

AE	ANALYZER ELEMENT
AFPS	AIR FILTER PRESSURE SWITCH
AI	ANALYZER INDICATOR
AO	ADJUSTABLE ORIFICE
AR	ANALYZER RECORDER
ASH	ANALYZER SWITCH HIGH
AT	ANALYZER TRANSMITTER
AY	ANALYZER RELAY, COMPUTE, CONVERT
BDV	BLOW DOWN VALVE
BR	BLEED RING
CC	CORROSION COUPON
CSH	CORROSION SWITCH HIGH
CT	CORROSION TRANSMITTER
DPT	DIFFERENTIAL PRESSURE TRANSMITTER
FA	FLAME ARRESTOR
FAH	FLOW ALARM HIGH
FAHH	FLOW ALARM HIGH HIGH
FAL	FLOW ALARM LOW
FALL	FLOW ALARM LOW LOW
FC	FLOAT CHAMBER
FCV	FLOW CONTROL VALVE
FE	FLOW ELEMENT
FFIC	FLOW RATIO INDICATOR CONTROLLER
FG	SIGHT FLOW INDICATOR
FI	FLOW INDICATOR
FIC	FLOW INDICATOR CONTROLLER
FLT	FILTER
FLX	FLEX HOSE
FM	FLOW METER
FO	FIXED ORIFICE
FQ	FLOW TOTALIZER
FQI	FLOW TOTALIZER INDICATOR
FR	FLOW RECORDER
FSH	FLOW SWITCH HIGH
FSL	FLOW SWITCH LOW
FSLL	FLOW SAFETY LOW LOW
FSV	FLOW SAFETY VALVE
FT	FLOW TRANSMITTER
FV	FLOW VALVE
FX	STRAIGHTENING VANE
FY	FLOW COMPUTER
FV	FLOW VALVE
GD	GAS DETECTOR
HIC	HAND INDICATING CONTROLLER
HM	HOUR METER
HOA	HAND-OFF-AUTO. SELECTOR SWITCH
HS	HAND SWITCH
HV	HAND VALVE
IAH	CURRENT ALARM HIGH
IL	CURRENT LIGHT
ISH	CURRENT SWITCH HIGH
II	CURRENT INDICATOR
LAH	LEVEL ALARM HIGH
LAL	LEVEL ALARM LOW
LC	LEVEL CONTROLLER
LCV	LEVEL CONTROL VALVE
LI	LEVEL INDICATOR
LV	LEVEL VALVE
LG	LEVEL GAUGE
LIC	LEVEL INDICATOR CONTROLLER
LSH	LEVEL SWITCH HIGH
LSHL	LEVEL SWITCH HIGH LOW
LSL	LEVEL SWITCH LOW
LT	LEVEL TRANSMITTER
LUBE	LUBRICATOR

KSC	TIME SWITCH CLOSE
KSO	TIME SWITCH OPEN
KV	TIME (SWITCHING) VALVE
MA	MOISTURE ANALYZER
MAH	MOISTURE ALARM HIGH
ME	MOISTURE ELEMENT
MI	MOISTURE INDICATOR
MSH	MOISTURE SWITCH HIGH
OC	OVER CRANK
OS	OVER SPEED
PAH	PRESSURE ALARM HIGH
PAL	PRESSURE ALARM LOW
PC	PRESSURE CONTROLLER
PCV	PRESSURE CONTROL VALVE
PDAH	PRESS. DIFFERENTIAL ALARM HIGH
PDAL	PRESS. DIFFERENTIAL ALARM LOW
PDC	PRESS. DIFFERENTIAL CONTROLLER
PDI	PRESS. DIFFERENTIAL INDICATOR
PDIC	PRESS. DIFFERENTIAL INDICATING CONTROLLER
PDISH	PRESS. DIFFERENTIAL INDICATING SWITCH HIGH
PDIT	PRESS. DIFFERENTIAL INDICATING TRANSMITTER
PDSH	PRESS. DIFFERENTIAL SWITCH HIGH
PDSL	PRESS. DIFFERENTIAL SWITCH LOW
PDT	PRESS. DIFFERENTIAL TRANSMITTER
PDV	PRESS. DIFFERENTIAL VALVE
PI	PRESSURE INDICATOR
PIC	PRESS. INDICATOR CONTROLLER
PIT	PRESS. INDICATOR TRANSMITTER
PLC	PROGRAMMABLE LOGIC CONTROLLER
PLV	PRELUBE VALVE
PR	PRESSURE RECORDER
PRV	PRESSURE REDUCING VALVE
PS	PRESSURE SWITCH
PSE	PRESSURE SAFETY ELEMENT
PSDH	PRESSURE SHUT DOWN HIGH
PSH	PRESSURE SWITCH HIGH
PSHL	PRESSURE SWITCH HIGH\LOW
PSL	PRESSURE SWITCH LOW
PSV	PRESSURE SAFETY VALVE
PT	PRESSURE TRANSMITTER
PVSV	PRESSURE VACUUM SAFETY VALVE
PY	PRESSURE TRANSDUCER
QS	PIG SIGNAL
RO	RESTRICTION ORIFICE
R/I	RESISTANCE/CURRENT TRANSDUCER
RTU	REMOTE TELEMETRY UNIT
S	SAMPLER (COMPOSITE)
SCSSV	
SDV	SHUTDOWN VALVE
SE	SPEED ELEMENT
SFI	SIGHT FLOW INDICATOR
SI	SPEED INDICATOR
SP	SPECIALTY PIPING
SSL	SPEED SWITCH LOW
SSH	SPEED SWITCH HIGH
SSV	SURFACE SAFETY VALVE
STR	STRAINER
STV	STARTER VALVE
SV	SOLENOID VALVE
TACH	TACHOMETER
TAH	TEMPERATURE ALARM HIGH
TAL	TEMPERATURE ALARM LOW
TCJ	J-TYPE THERMOCOUPLE
TCK	K-TYPE THERMOCOUPLE
TCV	TEMPERATURE CONTROL VALVE
TE	TEMPERATURE ELEMENT

TI	TEMPERATURE INDICATOR
TIC	TEMPERATURE INDICATOR CONTROLLER
TR	TEMPERATURE RECORDER
TS	TEMPERATURE SWITCH
TSE	TEMPERATURE SAFETY ELEMENT
TSH	TEMPERATURE SWITCH HIGH
TSDH	TEMPERATURE SHUT DOWN HIGH
TSL	TEMPERATURE SWITCH LOW
TT	TEMPERATURE TRANSMITTER
TV	TEMPERATURE VALVE
TW	THERMOWELL
UA	UNIT ALARM
USDA	UNIT SHUTDOWNS ALARM
VM	VOLT METER
VRV	VACUUM RELIEF VALVE
VSH	VIBRATION SAFETY HIGH
XA	MISCELLANEOUS ALARM
XDV	DIVERT VALVE
XI	MISCELLANEOUS INDICATOR
XLA	MISCELLANEOUS LOUVER ACTUATOR
XSH	VIBRATION SWITCH HIGH
XV	ACTUATED SPECIALTY VALVE
XY	PNEUMATIC RELAY
ZAC	POSITION ALARM CLOSED
ZAO	POSITION ALARM OPEN
ZI	POSITION INDICATOR
ZS	SPECIALTY SWITCH
ZSC	VALVE POSITION CLOSED
ZSO	VALVE POSITION OPEN
*L	PILOT LIGHT (*LETTER INDICATES COLOR) G - GREEN, R - RED, A - AMBER

CONTROL INSTRUMENT IDENTIFICATION

- INSTRUMENT (LOCAL MOUNT)
- INSTRUMENT (REMOTE MOUNT)
- TO CONTROL PANEL
- TO PLC
- I/P CURRENT TO PNEUMATIC CONVERTER LOCALLY FIELD MOUNTED
- LIGHT IN FIELD (* LETTER INDICATES COLOR)
- TWO OR MORE INSTRUMENTS WITH TWO SERVICES MOUNTED IN SAME CASE

COMPONENT IDENTIFICATION

ABJ	ATMOSPHERIC TANK
MAJ	PRESSURIZED FUEL FILTER
MBF	PRESSURIZED SCRUBBER
MBL	PRESSURIZED VOLUME BOTTLE
HAL	HEAT EXCHANGER FORCE DRAFT
CZZ	ENGINE/DRIVER
CAE	COMPRESSOR
HBG	HEAT EXHCHANGER SHELL AND TUBE
PBA	PUMP PROCESS

EQUIPMENT IDENTIFIERS

0000	WELLS & WELLHEAD EQUIPMENT
1000	ATMOSPHERIC VESSELS
2000	PRESSURE VESSELS
3000	HEATED VESSELS
4000	HEAT EXCHANGERS
5000	FUEL FILTERS
6000	DRIVER
7000	DRIVEN EQUIPMENT
8000	BUILDINGS & EQUIP. ASSEMBLIES
9000	MISCELLANEOUS

LINE NUMBER LEGEND

EXAMPLE: 3" GH - A -004 - SM

- 3" — LINE SIZE (INCHES)
- GH — SERVICE IDENTIFICATION CODE
- A — PIPING SPECIFICATIONS
- 004 — LINE NUMBER
- SM — SPECIAL MATERIAL (OPTIONAL)

SERVICE IDENTIFICATION

CODE	SERVICE	CODE	SERVICE	CODE	SERVICE
AC	ACID	EJW	ENGINE JACKET WATER	PG	PROCESS GAS
ACG	ACID GAS	FG	FUEL GAS	PV	PACKING VENT
AG	AUXILIARY GAS	FL	FLARE LINE	PW	POTABLE WATER
AM	AMMONIA	FW	FIRE WATER	S	SULFUR (LIQUID)
AI	INSTRUMENT AIR	GH	GAS HYDROCARBON	SA	STARTING AIR
AV	ATMOSPHERE VENT	GI	INERT GAS	SG	STARTING GAS
CA	COMBUSTION AIR	GL	GLYCOL	ST	STEAM
CD	CLOSED DRAIN	H2	HYDROGEN	SW	SOUR WATER
CL	CO2 LIQUID	HO	HOT OIL	SX	STARTER EXHAUST
CO	STEAM CONDENSATE	JW	JACKET WATER	TAW	TURBO AUX. WATER
CS	CAUSTIC	LH	LIQUID HYDROCARBON	UA	UTILITY AIR
CV	CO2 VAPOR	LO	LUBE OIL	V	VENT LINE
CWS	COOLING WATER SUPPLY	N	NITROGEN	WS	WASTE SYSTEM
CWR	COOLING WATER RETURN	OD	OPEN DRAIN	WW	WASTE WATER
DR	DRAIN	OS	OIL SYSTEM		
EX	EXHAUST	PA	PROCESS AIR		

PIPING SPEC.

A	150 ANSI
B	300 ANSI
C	400 ANSI
D	600 ANSI
E	900 ANSI
F	1,500 ANSI
G	2,500 ANSI

ABBREVIATIONS

ACK	ADJUSTABLE CHOCK
AF	AIR FILTER
BAT	BATTERY
BLT	BELT
BF	BLIND FLANGE
BRG	BLOCK BEARING
BUS	BUSHING
CAT	CATALYST
CDS	CLOSED DRAIN SYSTEM
CF	CUSTOMER FURNISHED
CPL	COUPLING
CSC	CAR SEAL CLOSED
CSO	CAR SEAL OPEN
DBB	DOUBLE BLOCK & BLEED
ECM	ENGINE CONTROL MODULE
ESD	EMERGENCY SHUTDOWN
ESS	ENGINE SUPERVISORY SYSTEM
FC	FAIL CLOSED
FDS	FLAME DETECTION SYSTEMS
FF	FLAT FACE
FL	FAIL LAST
FO	FAIL OPEN
FDS	FLAME DETECTION SYSTEMS
FRSV	FIRE SAFE VALVE
GCK	GROUT CHOCK
GRD	GUARD
HCI	HEAT CONSERVATION INSULATION

IA	INSTRUMENT AIR
IF	INTERFACE
IG	INSTRUMENT GAS
LC	LOCK CLOSED
LD	LOCK DEVICE
LO	LOCK OPEN
LS	LIQUID SEAL
MAWP	MAX. ALLOWABLE WORKING PRESSURE
MCC	MOTOR CONTROL CENTER
MW	MANWAY
NC	NORMALLY CLOSED
NO	NORMALLY OPEN
NPT	NATIONAL PIPE THREAD
PPI	PERSONAL PROTECTION INSULATION
RF	RAISED FACE
RTJ	RING TYPE JOINT
SC	SAMPLE CONNECTION
SCC	SILENCER CATALYST COMBO
SFT	SHAFT
SHV	SHEAVE
S/S	SEAM TO SEAM
T/T	TANGENT TO TANGENT
UCP	UNIT CONTROL PANEL
VF	VENDOR FURNISHED
VS	VIBRATION SWITCH
VSH	VIBRATION SWITCH HIGH
VVCP	VARIABLE VOLUME CLEARANCE POCKET

VALVE IDENTIFICATION

EXAMPLE: 1" A -4 R - 0

- 1" — VALVE SIZE
- A — CLASS / RATING
- 4 — VALVE TYPE
- R — VALVE FACING
- 0 — SPECIAL VALVE (OPTIONAL)

VALVE & PIPING CODES & CLASSIFICATIONS

CLASS / RATING	VALVE TYPE	VALVE FACING	SPECIAL VALVE OPTIONS
A 150 ANSI	1 - GATE	F = FLAT FACE	A = ANGLE BODY
B 300 ANSI	2 - BALL	J = RING JOINT	B = BALL CHECK
C 400 ANSI	3 - PLUG	R = RAISED FACE	D = DOUBLE FLAPPER
D 600 ANSI	4 - GLOBE	S = SCREWED	F = FULL PORT
E 900 ANSI	5 - CHECK	U = UNION	G = GEAR OPERATOR
F 1,500 ANSI	6 - NEEDLE	W = BUTT WELDED	H = HIGH TEMPERATURE
G 2,500 ANSI	7 - BUTTERFLY	X = SPECIAL	L = LOCKING PROVISIONS
H API 2,000	8 - MULTIPORT	Z = SOCKETWELD	M = M x F NPT ENDS
I API 3,000	9 - GAUGE		N = F x F NPT ENDS
J API 5,000			P = PISTON CHECK
K API 10,000			R = REDUCED PORT
L API 15,000			S = SWING CHECK
M API 20,000			T = TRUNNION SUPPORT
N 2,000# THRD			U = LUG TYPE
P 3,000# THRD			W = WAFER
Q 6,000# THRD			Z = SPECIAL
R 10,000# THRD			

JOB NO: -
DWG. NO: 100-000
SHT 1 OF 1
REV. NO: 0
SCALE: NONE
DWN BY: -
CHK'D BY:
APP'D BY:
CUSTOMER:

PROCESS FLOW AND INSTRUMENT DIAGRAM LEGEND SHEET
3 STAGE COMPRESSOR PACKAGE
EM1500 / KBK-4 / (2) 14.125K21 x 11K21 x 6.75K21 / 132EX

MBF-2100
1ST STAGE SUCTION SCRUBBER
30"OD x 78" S/S
635 PSIG @ 150°F

MBL-2110
1ST STAGE SUCTION BOTTLE
24"OD x 75" S/S
635 PSIG @ 150°F

MBL-2120
1ST STAGE DISCHARGE BOTTLE
18"OD x 82" S/S
815 PSIG @ 350°F

HAL-4010
FORCE DRAFT HEAT EXCHANGER
815 PSIG @ 350°F
EADS 132EX

MBF-2200
2ND STAGE SUCTION SCRUBBER
24"OD x 72" S/S
815 PSIG @ 150°F

MBL-2210
2ND STAGE SUCTION BOTTLE
20"OD x 30"S/S
815 PSIG @ 150°F

MBL-2220
2ND STAGE DISCHARGE BOTTLE
18"OD X 48"S/S
1270 PSIG @ 350°F

1 **HAL-4020**
FORCE DRAFT HEAT EXCHANGER
1270 PSIG @ 350°F
EADS 132EX

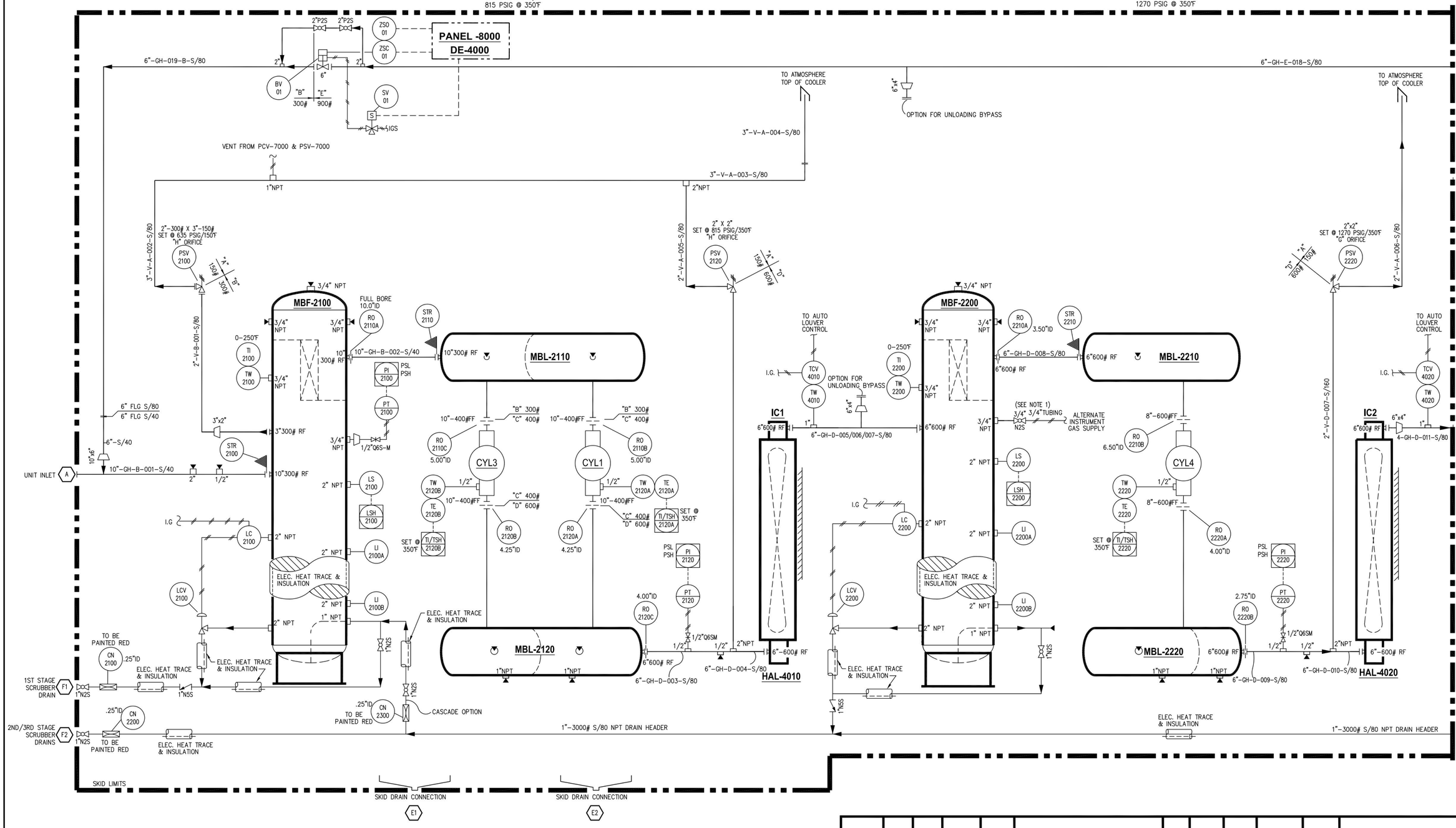

NOTE:

1. ALWAYS CLOSE VALVE IF OPENING ON SKID EDGE I.G SUPPLY.

CYL1 (CAE-7001)		CYL3 (CAE-7003)		CYL4 (CAE-7004)		IC1		IC2	
14-1/8 K21	CYLINDER	14-1/8 K21	CYLINDER	11 K21	CYLINDER	815	DESIGN PRESSURE	1270	DESIGN PRESSURE
14.125"	BORE SIZE	14.125"	BORE SIZE	11"	BORE SIZE	350°F	DESIGN TEMP.	350°F	DESIGN TEMP.
815	MAWP (PSIG)	815	MAWP (PSIG)	1270	MAWP (PSIG)	6" 600# RF	FLANGE RATING	6" 600# RF	FLANGE RATING
10" 400#FF	FLANGE RATING	10" 400#FF	FLANGE RATING	8" 600#FF	FLANGE RATING				

MAJOR COMPONENTS	
MOTOR	CAT CN1566
COMPRESSOR	ARIEL KBK/4
COUPLING	AMR-750 (SPECIAL)
COOLER	EADS 132EX
PANEL	DE-4000

MARK	QUAN.	SIZE	RATING	TYPE	SERVICE	MARK	QUAN.	SIZE	RATING	TYPE	SERVICE
						K	ONE	1"	2000#	FNPT	COMP. LUBE OIL MAKE-UP
E3 E4	TWO	2"	3000#	FNPT	SKID DRAIN	J	ONE	1"	2000#	FNPT	COMPRESSOR OIL DRAIN
E1 E2	TWO	2"	3000#	FNPT	SKID DRAIN	H	ONE	1"	2000#	FNPT	PACKING VENT/ DRAIN
C	ONE	1"	2000#	FNPT	INSTRUMENT GAS	G	ONE	1"	2000#	FNPT	DISTANCE PIECE DRAIN
B	ONE	4"	900#	RF	UNIT OUTLET	F2	ONE	1"	2000#	FNPT	2nd & 3rd STG. SCRUBBER DRAIN
A	ONE	10"	300#	RF	1st STAGE INLET	F1	ONE	1"	2000#	FNPT	1st STG. SCRUBBER DRAIN

CUSTOMER CONNECTION SCHEDULE

JOB NUMBERS

CERTIFIED PROJECT MANAGER
NAME: DATE:

NO.	DATE	BY	CHK'D	APP'D	DESCRIPTION
0	08/16/21	MS			ISSUED FOR CONSTRUCTION
1	07/20/23	MS			REV. COOLER DISCRPT. TAG NUMBER

REVISION HISTORY

PROCESS FLOW DIAGRAM
3 STAGE COMPRESSION PACKAGE
EM1500 / KBK-4 / (2) 14.125K21 x 6.75K21 / 132EX

JOB NO:
DWG. NO: 100-001
SHT 1 OF 1
REV. NO: 1
SCALE: N.T.S.
DWN BY: _
CHK'D BY:
APP'D BY:
CUSTOMER:

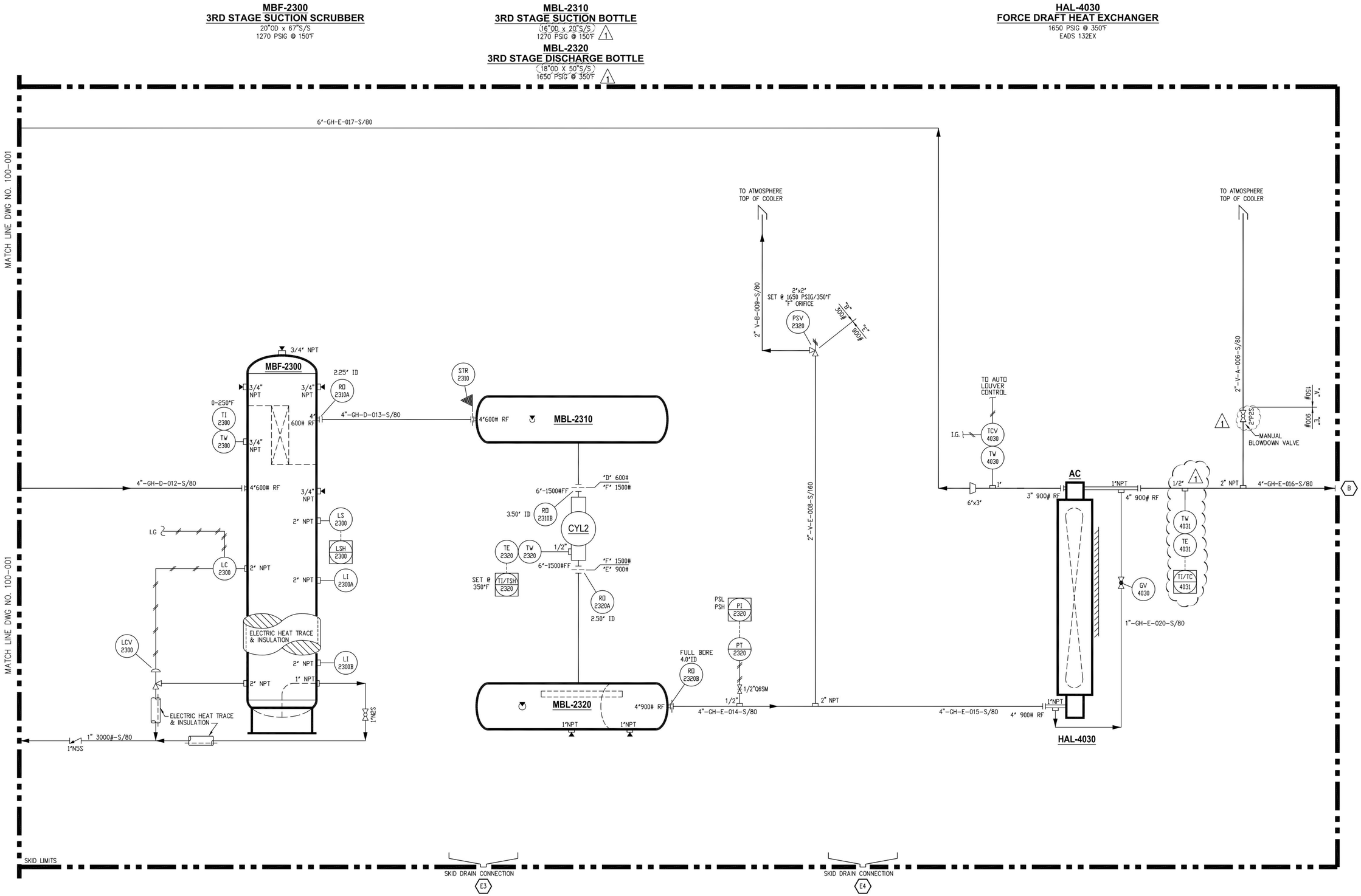

NOTES:

CYL2 (CAE-7002)		AC	
7 1/4 K21	CYLINDER	1650	DESIGN PRESSURE
6.75"	BORE SIZE	350°F	DESIGN TEMP.
2415	MAWP (PSIG)	4" 900# RF	FLANGE RATING
6" 1500#FF	FLANGE RATING		

JOB NUMBERS

CERTIFIED PROJECT MANAGER

NAME: DATE:

REVISION HISTORY

NO.	DATE	BY	CHK'D	APP'D	DESCRIPTION
0	08/16/21	MS			ISSUED FOR CONSTRUCTION
1	07/20/23	MS			REV CYL2 MAWP/ 3RD STG SUC/DISCH BTLS/AFTER COOLER TEMP/BLOWDWN VAL.

NEW IBERIA, LOUISIANA 70560

PROCESS FLOW DIAGRAM
3 STAGE COMPRESSION PACKAGE
EM1500 / KBK-4 / (2) 14.125K21 x 11K21 x 6.75K21 / 132EX

JOB NO:
DWG. NO: 100-002
SHT 1 OF 1
REV. NO: 1

DWN BY: -
SCALE: N.T.S.
CHK'D BY:
APP'D BY:
CUSTOMER:

HBG-7500
COMPRESSOR OIL COOLER
AKG-CC450 ;WORK PRESSURE: 250 PSIG
EM: 1/2HP; 56C; 460V/3PH/60HZ; 1725RPM TEFC

PBA-7000
PRE-LUBE PUMP
VIKING SG-40716-GOV w/ M DRIVE ADAPTER, 11 GPM @ 35 PSIG
EM :2HP 1200 RPM / 460V/ 3ø/ 60 HZ

CAE-7000
COMPRESSOR
ARIEL KBK-4
RATED: 3680 BHP @ 1200 RPM

CZZ-6000
ELECTRIC MOTOR
CAT CN1566
RATED: 1500 BHP @ 1200 RPM

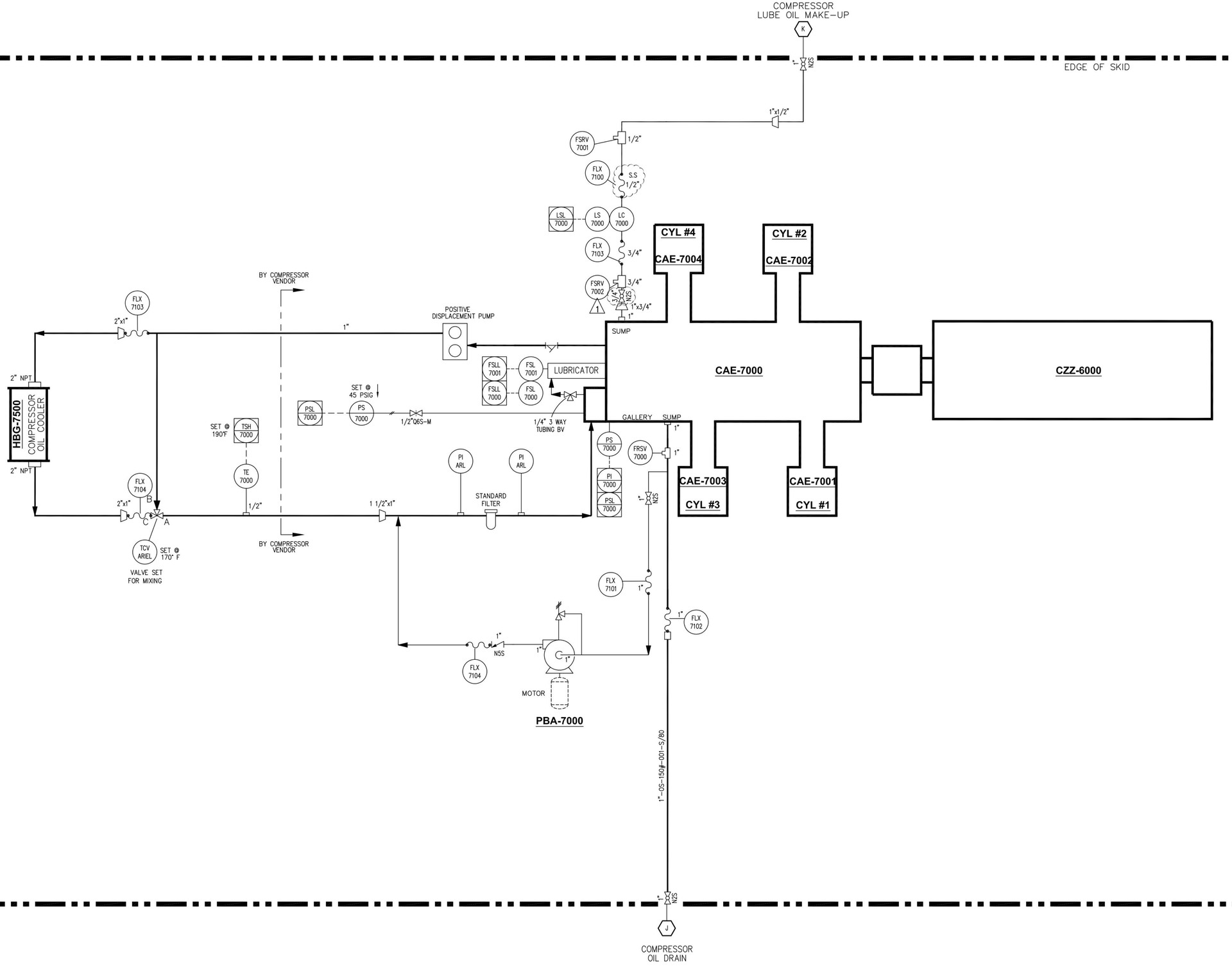

JOB NUMBERS:

CERTIFIED PROJECT MANAGER
NAME: DATE:

REVISION HISTORY

NO.	DATE	BY	CHK'D	APP'D	DESCRIPTION
0	08/16/21	MS			ISSUED FOR CONSTRUCTION
1	07/20/23	MS			ADD VALVE/ CHG TO S.S. HOSE

OIL PIPING DIAGRAM
3 STAGE COMPRESSION PACKAGE
EM1500 / KBK-4 / (2) 14.125K21 x 11K21 x 6.75K21 / 132EX

JOB NO:	DWG. NO: 100-003		1
	SHT 1 OF 1		
	REV. NO.		
DWN BY: -	SCALE: N.T.S.	CHK'D BY:	APP'D BY:
CUSTOMER:			

HBG-7500
COMPRESSOR OIL COOLER
AKG-CC450 ;WORK PRESSURE: 250 PSIG
EM: 1/2HP; 56C; 460V/3PH/60HZ; 1725RPM TEFC

CAE-7000
COMPRESSOR
ARIEL KBK/4
(2) 14.125K21 x 11K21 x 6.75K21
RATED 1500BHP @ 1200 RPM

PBA-7000
PRE-LUBE PUMP
VIKING SG-40716-GOV w/ M DRIVE ADAPTER, 11 GPM @ 35 PSIG
EM :2HP 1200 RPM / 460V/ 3ø/ 60 HZ

VFD PANEL

CZZ-6000
ELECTRIC MOTOR
CAT CN1566
RATED: 1500 BHP @ 1200 RPM

HAL- 4000
HEAT EXCHANGER
EADS-132EX
EM:50HP, 1800 RPM, TEFC,
460V/60Hz/3PHASE

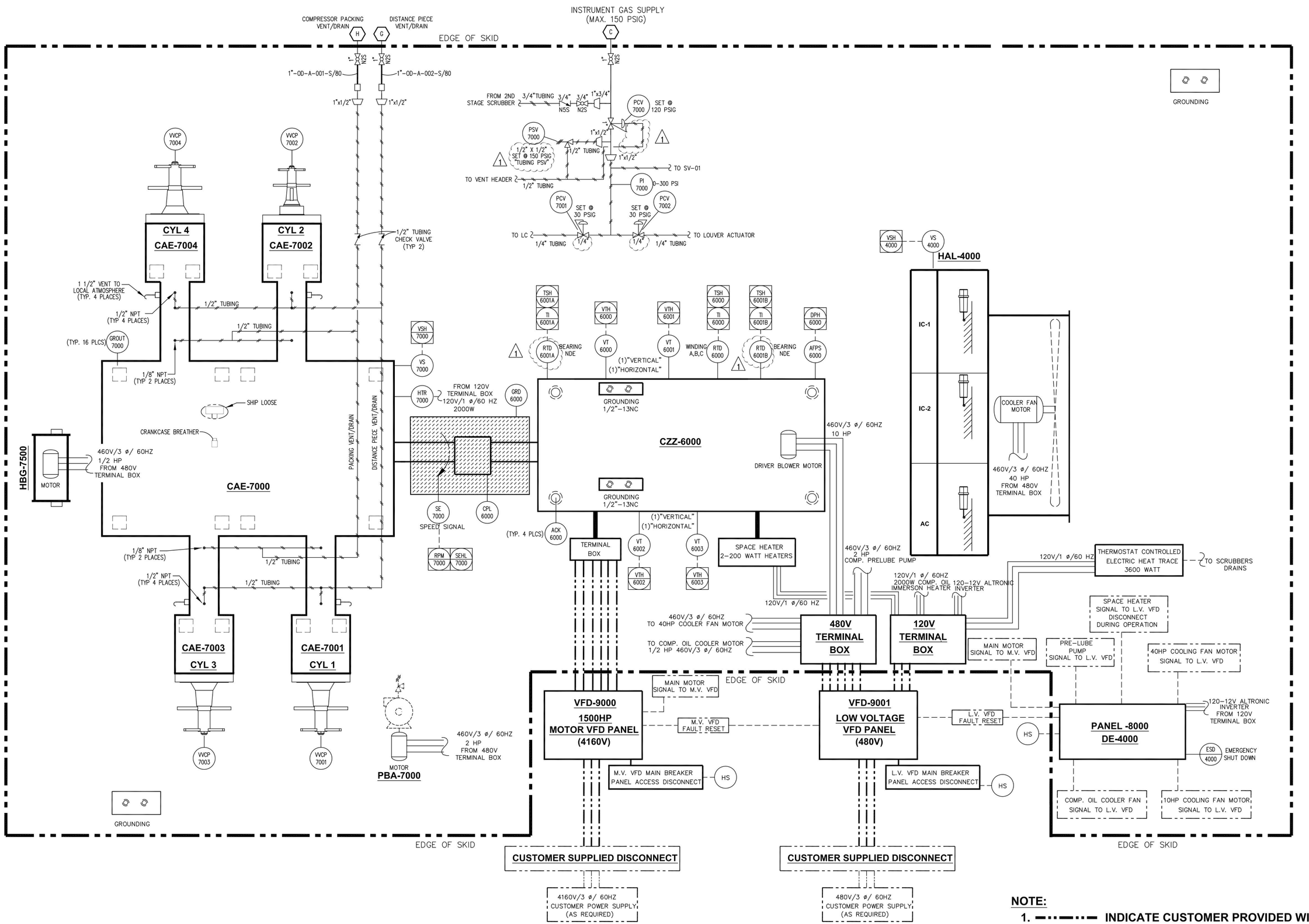

NOTE:
1. ---·---·--- INDICATE CUSTOMER PROVIDED WIRING.

REVISION HISTORY

NO.	DATE	BY	CHK'D	APP'D	DESCRIPTION
0	08/16/21	MS			ISSUED FOR CONSRUCTION
1	07/20/23	MS			REV. PCV-7001/7002 TO 1/4"/SET PSV-7000 150PSIG
					VENT PCV-7000 TO VENT HEADER/ TE-6001A/B TO RTD

JOB NUMBERS

CERTIFIED PROJECT MANAGER
NAME: DATE:

MAJOR EQUIPMENT UTILITY DIAGRAM
(3) STAGE COMPRESSOR PACKAGE
EM1500 / KBK-4 / (2) 14.125K21 x 11K21 x 6.75K21 / 132EX

JOB NO.
DWG. NO. 100-004
SHT OF
REV. NO. 1
DWN BY:
CK'D BY:
APP'D BY:
SCALE: NTS
CUSTOMER: