COMPRESSOR UNBALANCED FORCES @ 1100 RPM	PRIMARY	SECONDARY
HORIZONTAL FORCE, KIPS	0.304	0.086
VERTICAL FORCE, KIPS	0.00	0.00
HORIZONTAL COUPLE, KIP-FT	16.41	0.151
VERTICAL COUPLE, KIP-FT	16.28	0.00

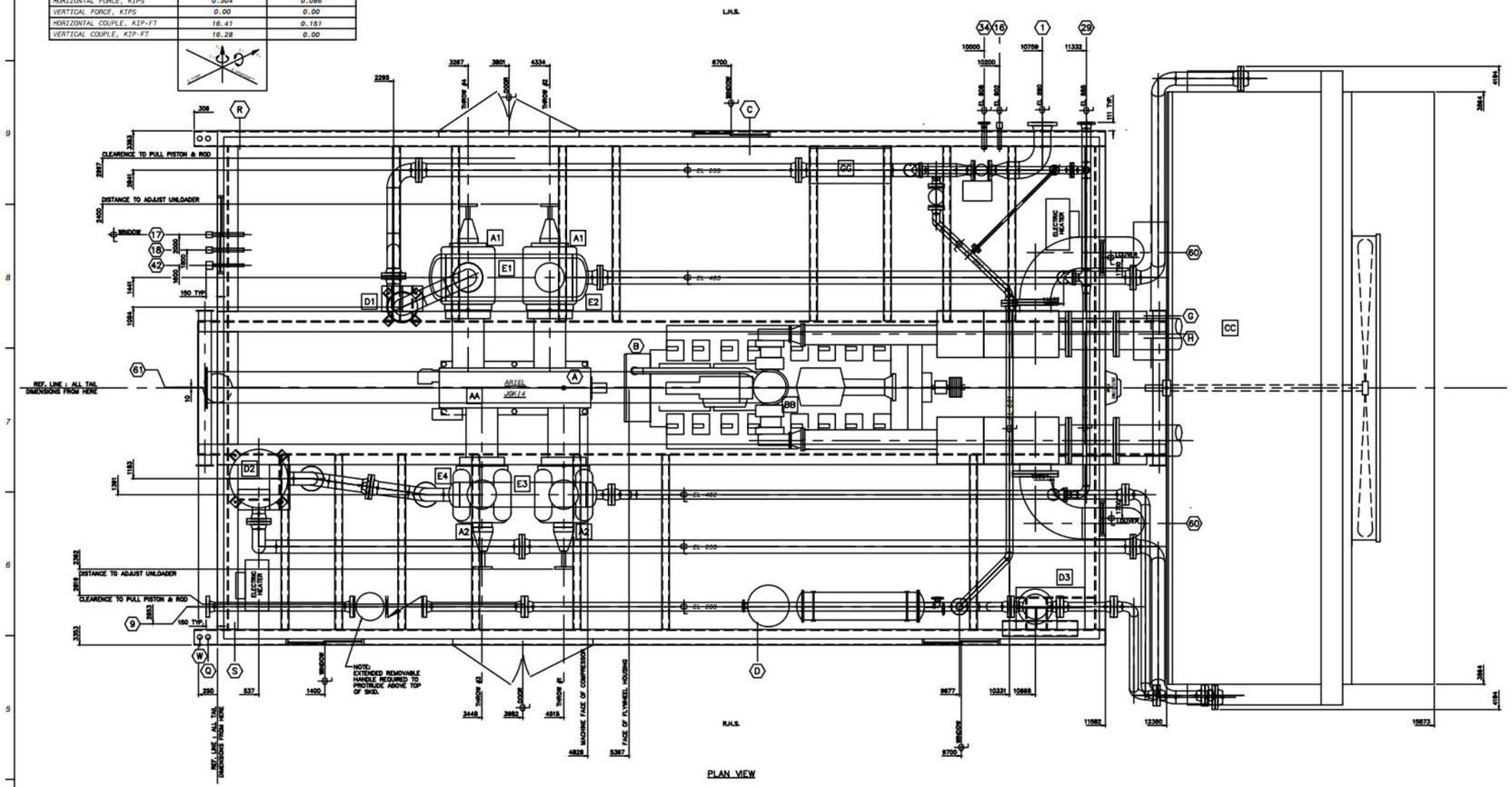

PLAN VIEW

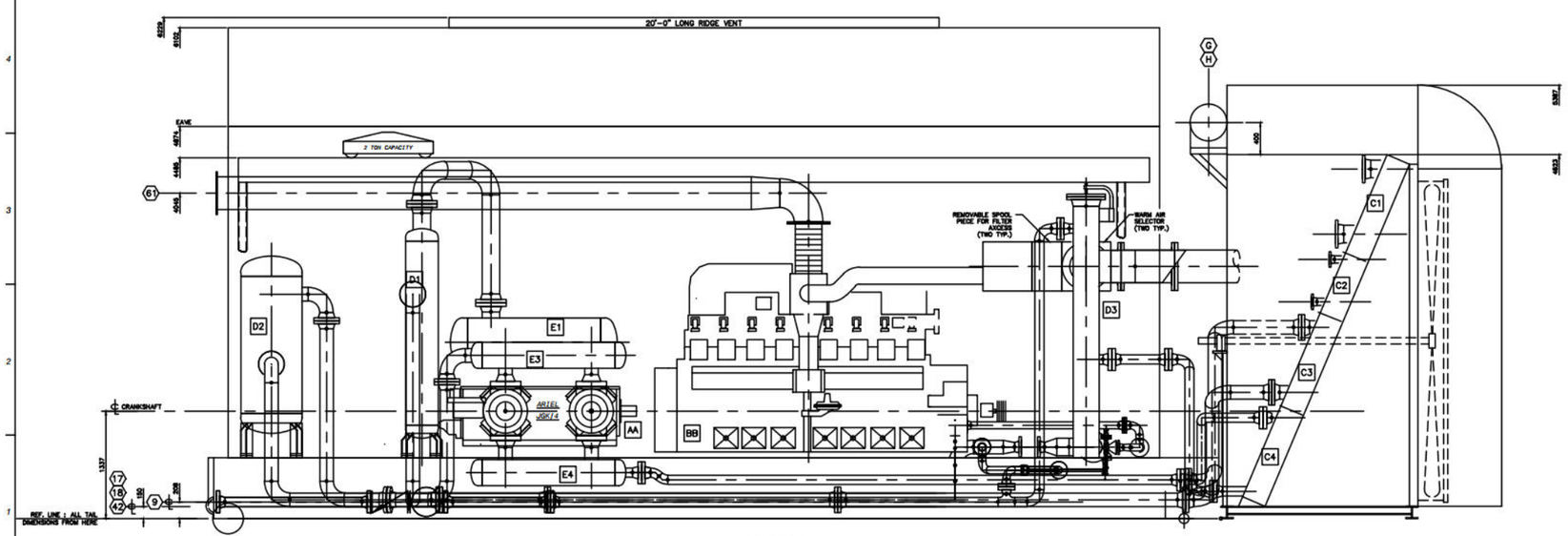

ELEVATION VIEW

Drawing: GA94014 / Date: 09-14-1994 / Time: 16:01 / User ID: RNS

CUSTOMER CONNECTIONS

NO.	DESCRIPTION	SIZE
1	STAGE ONE INLET	8"-300#RF
9	FINAL DISCHARGE	4"-600#RF
16	SCRUBBER DRAIN HEADER	1" NPT
17	PACKING VENT AND DRAIN	1 1/2" NPT
18	DISTANCE PIECE VENT AND DRAIN	1 1/2" NPT
29	PSV VENT HEADER	4"-150#RF
34	START & FUEL GAS SUPPLY	2"-150#RF
42	ENGINE / COMPRESSOR OIL DRAIN	2" NPT
60	ENGINE AIR INLET	16"-150#FF
61	ENGINE EXHAUST	16" TUBE

OTHER CONNECTIONS

CONN.	DESCRIPTION	SIZE
A	COMPRESSOR OIL FILL	2" NPT
B	ENGINE OIL FILL	2" NPT
C	COMPRESSOR OIL TANK FILL	1" NPT
D	ENGINE OIL TANK FILL	1" NPT
G	JACKET WATER (SURGE) FILL	2"-78 PRESS.CAP
H	AUXILIARY WATER FILL	2" NPT
Q	GLYCOL TANK VENT	2" NPT
R	COMPRESSOR OIL TANK VENT	3/4" TUBE
S	ENGINE OIL TANK VENT	3/4" TUBE
W	GLYCOL TANK PUMP OUT	2" NPT

MAJOR COMPONENTS

AA COMPRESSOR
(1) ARIEL, JGK/4
A1 (1) 12 1/2" DIA "K" CLASS CYLINDER WHP : 635 PSIG
A2 (1) 7 1/4" DIA "K" CLASS CYLINDER WHP : 1900 PSIG

BB ENGINE
(1) WAUKESHA, 9390GL

CC COOLER
(1) AIR-X-CHANGER, 156EH
C1 (1) ENGINE JACKET WATER SECTION : 14 PSIG @ 300°F
C2 (1) TURBO AUXILIARY WATER SECTION : 14 PSIG @ 300°F
C3 (1) INTER-COOLING SECTION : 635 PSIG @ 300°F
C4 (1) AFTER-COOLING SECTION : 1315 PSIG @ 300°F

DD SCRUBBERS
D1 (1) 16" DIA, COMPACT VERTICAL CYCLON SCRUBBER, WHMP 655 PSIG @ 300°F
D2 (1) 30" DIA., x 67" S/S, WHMP 655 PSIG @ 300°F
D3 (1) 12 3/4" DIA, PECO FILTER, WHMP 1315 PSIG @ 300°F

EE BOTTLES
E1 (1) 24" DIA., x 65" S/S WHMP : 655 PSIG @ 300°F
E2 (1) 20" DIA., x 65" S/S WHMP : 655 PSIG @ 300°F
E3 (1) 12 3/4" DIA., x 65" S/S WHMP : 655 PSIG @ 300°F
E4 (1) 12 3/4" DIA., x 65" S/S WHMP : 1315 PSIG @ 300°F

FF FUEL GAS FILTER
(1) GAS FILTER, HEADLINE 685AP 1-1/2" NPT, 250 PSIG WHMP @ 300°F

GG CONTROL PANEL
(1) SPARTAN, WICROGUARD

GENERAL NOTES

1. THIS DRAWING IS NOT TO BE USED FOR CONSTRUCTION UNLESS STAMPED "RELEASED FOR MANUFACTURE".
2. DO NOT SCALE THIS DRAWING.
3. ALL DIMENSIONS ARE IN MILLIMETERS.
4. FOR DESIGN PARAMETERS AND PAINT SPECIFICATION REFER TO PROJECT SCOPE SUMMARY DRAWING NO. SS94014
5. ALL PIPING MUST BE SELF SUPPORTING BEYOND UNIT CONNECTIONS.
6. LOCATIONS OF CUSTOMER CONNECTIONS ARE NOT GUARANTEED AS THESE DIMENSIONS MAY BE SUBJECT TO AN ACCUMULATION OF TOLERANCES ON SEVERAL COMPONENTS. MINOR CHANGES MAY ALSO BE MADE ON SCREWED SERVICE PIPING IN ORDER TO FACILITATE INSTALLATION AND MAINTENANCE. ON COMPLETION A FINAL DRAWING WILL BE ISSUED WITH FIELD CONNECTIONS CORRECTED TO 5 mm.
7. IT IS ESL'S RECOMMENDATION THAT ANY PRE-SPOOLING TO THIS COMPRESSOR PACKAGE CONTAIN FIELD WELDS AT ALL CUSTOMER CONNECTIONS.
8. DIMENSIONS INDICATED (*) SHALL BE CONFIRMED AND CERTIFIED CORRECT (**) ON A FINAL REVISION.
9. THE FOLLOWING ITEMS WILL BE SHIPPED LOOSE FOR FIELD INSTALLATION BY OTHERS: MUFFLER, COOLER, AND COOLER TO SKID EDGE PIPING.

SHIPPING WEIGHTS	KG.	LBS.
ENGINE	11214	24700
COMPRESSOR	7931	17448
COOLER	14091	31000
VESSELS	4512	9928
SKID	28806	63373
MISC. & LIQUIDS	14463	31818
BUILDING	3800	8360
CRANE	2545	5599
TOTAL SHIPPING WT.	73271	161226
SHIPPED LOOSE ITEMS	14091	31000
TOTAL UNIT WEIGHT	87362	192226

UNIT DIMENSIONS	LENGTH		WIDTH		HEIGHT	
	mm	ft/in	mm	ft/in	mm	ft/in
MAIN SKID w/ ALL EQUIP. MOUNTED	16279	53'-1 3/8"	8388	27'-6 1/4"	6229	20'-5 1/4"
SHIPPING DIMENSIONS	11908	39'-0 13/16"	7010	23'-0"	6229	20'-5 1/4"
COOLER	3441	11'-3 15/32"	8388	27'-6 1/4"	5387	17'-8 3/32"

REV	DESCRIPTION	DATE	DRAWN BY	CHECKED BY
6	AS BUILT	94-09-14	RNS	
5	ADDED DOORS, WINDOWS, LOUVERS AND FAN	94-08-26	RNS	
4	ADDED ELECTRIC HEATERS	94-08-16	RNS	
3	ADDED CHECK & BALL VALVES TO FINAL DISCHARGE	94-06-29	RNS	
2	REVISED PER CUSTOMER REQUEST	94-06-02	RNS	
1	ISSUE FOR CONSTRUCTION	94-05-30	RNS	
0	BLOCK GA FOR APPROVAL	94-05-02	RNS	

Enerflex Systems Ltd.

CALGARY
EDMONTON
GRANDE PRAIRIE
BRAZEAU NAT
RED DEER
FORT McMURRAY
FORT ST. JOHN, B.C.
VANCOUVER, B.C.
LLOYDMINSTER, SASKATCHEWAN
SYDNEY, AUSTRALIA

DATE: 94-05-03	DESIGN BY: RNS	DATE:	DWG. NO.
DFTN BY: RNS	CHECKED BY: D.W.	DATE: 94-05-18	GA94014
SCALE: 1:25	APP'D BY: K.JR	DATE:	

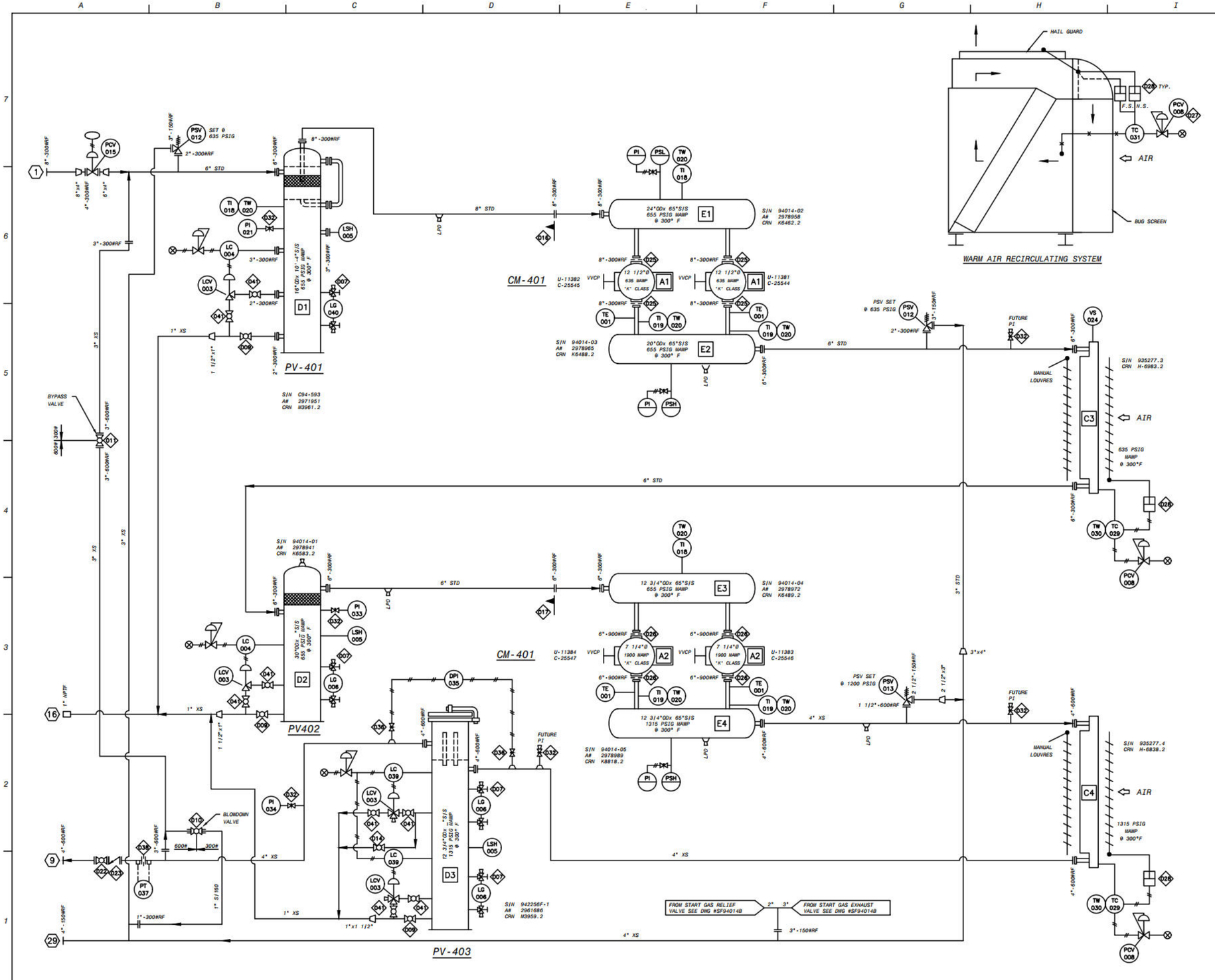

BILL OF MATERIAL

ITEM	QTY.	CODE No.	DESCRIPTION
001	4	PN4-1405	TEMP SENSOR, ROSEMOUNT PLATINUM RTD #0068H21N00B045T22,
			RANGE -100°C/400°C C/W 304SS THERMOWELL
003	4	FI-128P1	DIAP, 1" FISHER 128PQC-1B CS 1/4" OR, NC, 0-20 PSI
004	2	FI-2660R	LC,2"NPT FISHER 2660A-67 NACE PVC DISPLACER
005	3	MU-L12	LEV SW, MURPHY L-1200 2" XP WI BUOYGLAS FLOAT
006	3	PE-1RL7	LEV GAUGE, PENBERTHY 1RL-7, CS WI REFLEX FLAT GLASS, SWEET
007	4	PE-320JTN	SET GAUGE VALVE, PENBERTHY 320J, 3/4" NPTM, CS, NACE
008	3	FI-067	REG, 1/4" FISHER #67AFR-362, 5-35 PSI (WO PI)
009	3	WK-13614	BALL VALVE, WKM B136-CS-02-CS HL 1-1/2" RP WI LATCH HANDLE
010	1	WO-59X10S	BALL VALVE, WORCESTER S5946RY-SW 1" SW FP CS NACE
011	1	TR-S6030	BALL VALVE, TRUELINE CY2-FS-600 FP CS 3"-600# NACE
012	2	FA-26HA12	FARRIS PSV, 26HA12 2"-300# X 3"-150#, .785 OR.
013	1	FA-26GA13	FARRIS PSV, 26GA13 1-1/2"-600# X 2-1/2"-150#, .503 OR.
014	1	WK-13610	BALL VALVE, WKM B136-CS-02-CS HL 1" RP WI LATCHING HANDLE
015	1	PN4-1403	CONTROL VALVE, FISHER V200-1052-3610J, 4"-300#RF
016	1	CS-0831	CONE STRAINER, 8"-300# CS, 100% AREA, 316SS, 40 MESH
017	1	CS-0631	CONE STRAINER, 6"-300# CS, 100% AREA, 316SS, 40 MESH
018	3	TR-30601	TI, TREND 33060 6" STEM BM 3" D DUAL 0-250 DEG. F
019	4	TR-30602	TI, TREND 33060 6" STEM BM 3" D DUAL 50-500 DEG. F
020	7	TW-066	THERMOWELL, 1/2" X 3/4" NPTM X 6" LG 304SS(w 1/2"lag,U = 4.5"
021	1	WI-B4S030	PI, WIKA 233.53, 4" LF 316 BT/STK BM 1/2" DUAL 0-300 PSI
022	1	TR-V6040	BALL VALVE, TRUELINE CY2-FV-600 RP CS 4"-600# NACE
023	1	DA-305A40	PISTON CHECK VALVE, 4"-600# DANIEL 305A CS
024	1	MU-VS2	VIB SW, MURPHY VS-2 ELECTRIC WI MANUAL RESET
025	4	ORIFICEPLATE	SPACER PLATE, 8"-300# FULL BORE
026	4	ORIFICEPLATE	SPACER PLATE, 6"-900# FULL BORE
027	1	EN-RB	MTG BRACKET - FISHER 67AFR DWG. 9.8035
028	4	AX-LAG	AUTO LOUVRE ACTUATOR GARZO, MOUNTED BY AIR-X
029	2	NO-5012	TEMP CONT, NORRISEAL 5000 INDIRECT 1" WI 12" PROBE
030	2	NO-TW12	THERMOWELL, 12" X 1" NPT SS, 3000 PSIG MAWP
031	1	FO-43AP15	TEMP. CONTROLLER, FOXBORO 43AP-FA42N, INCL CLASS 1A THERMAL
			SYSTEM 15 CAPILLARY AND ELEMENT, 1/2" NPT BUSHING 0-400DEG F,
			DUAL SCALE
032	5	CE-CM02	VALVE, CENTURY CM2-3-M64T-B-V, 3/4" NPTM X 1/2" NPTF CS
033	1	WI-B4S060	PI, WIKA 233.54, 4" LF 316 BT/STK BM 1/2" DUAL 0-600 PSI
034	1	WI-B4S200	PI, WIKA 233.54, 4" LF 316 BT/STK BM 1/2" DUAL 0-2000 PSI
035	1	WI-AA30	DIFF PRES GAUGE, WID-WEST 120-AA-10-50-30, 0-30 PSID
036	2	WH-2NVS	NEEDLE VALVE, WHITEY S-1VS4, 1/4" TBG CS
037	1	PN4-1404	DIFFERENCIAL PRESSURE TRANSMITTER, ROSEMOUNT MODEL
			#1151DP4E12C6 RANGE 0-0.09/0-5.4 PSI, XP, C/W
			4-20 ma OUTPUT.
038	1	PN4-14	SET @ 4"-600#RF ORIFICE FLANGES C/W ORIFICE PLATE, 2.410"I.D.
039	2	MU-L12ND	LEV CONT, MURPHY L-1200-N-DVD 2" WI BUOYGLAS FLOAT
040	1	PE-2RL7	LEV GAUGE, PENBERTHY 2RL-7 CS WI REFLEX FLAT GLASS, SWEET
041	8	WK-13610	BALL VALVE, WKM B136-CS-02-CS HL 1" RP WI LATCHING HANDLE

GENERAL NOTES

1. THIS DRAWING IS NOT TO BE USED FOR CONSTRUCTION UNLESS STAMPED "RELEASED FOR MANUFACTURE".
2. ALL PROCESS PIPING TO BE CLAMPED AS NEAR TO ALL ELBOWS AS POSSIBLE, REFER TO DRAWING 12.8006.
3. FOR DESIGN PARAMETERS REFER TO PROJECT SCOPE SUMMARY DRAWING.
4. FOR CUSTOMER CONNECTIONS REFER TO GENERAL ARRANGEMENT DRAWING.
5. PIPE NIPPLES 1-1/2" AND SMALLER TO BE MIN. XXH WALL THICKNESS.

LEGEND

- CUSTOMER CONNECTIONS
- LOCALLY MOUNTED
- MAIN CONTROL PANEL
- LOCAL GAUGE PANEL
- VENT LINE (TUBING)
- DRAIN LINE (TUBING)
- OIL LINE (TUBING)
- INSTRUMENT LINE (TUBING)
- INSTRUMENT SUPPLY GAS
- LOW POINT DRAIN (PLUGGED)
- FULL BORE SPACER PLATE 1/8"THK
- 3/16" WEEP HOLE DRAIN
- MANUFACTURED COMPONENTS
- UTILITIES TUBING
- MAJOR COMPONENTS
- ITEM TO BE SHIPPED LOOSE FOR FIELD INSTALLATION

REV	DESCRIPTION	DWN BY	DATE
5	AS BUILT	WNS	94-09-14
4	REMOVE ALT FUEL SUPPLY & ADD ISO VALVES	WNS	94-07-22
3	ALTERNATE FUEL SUPPLY LINE ADDED	JPG	94-07-20
2	ADDITION OF BALL & CHECK VALVES & LEVEL GAUGE	WNS	94-06-29
1	ISSUE FOR CONSTRUCTION	WNS	94-05-10
0	FOR APPROVAL	TJO	94-04-26

Enerflex Systems Ltd.

CALGARY
EDMONTON
GRANDE PRAIRIE
MEDICINE HAT
RED DEER
FORT McMURRAY
FORT ST. JOHN, B.C.
VANCOUVER, B.C.
LLOYDMINSTER, SASKATCHEWAN
SYDNEY, AUSTRALIA

TITLE:

PROCESS & INSTRUMENTATION DIAGRAM
ARIEL JGK/4, WAUKESHA 9390GL, AIR-X-CHANGERS 156EH
COMPRESSOR PACKAGE

94/09/14 16:35

NOTE :
SEE GENERAL ARRANGEMENT DRAWING FOR ACTUAL LOCATIONS OF BUILDING EQUIPMENT.

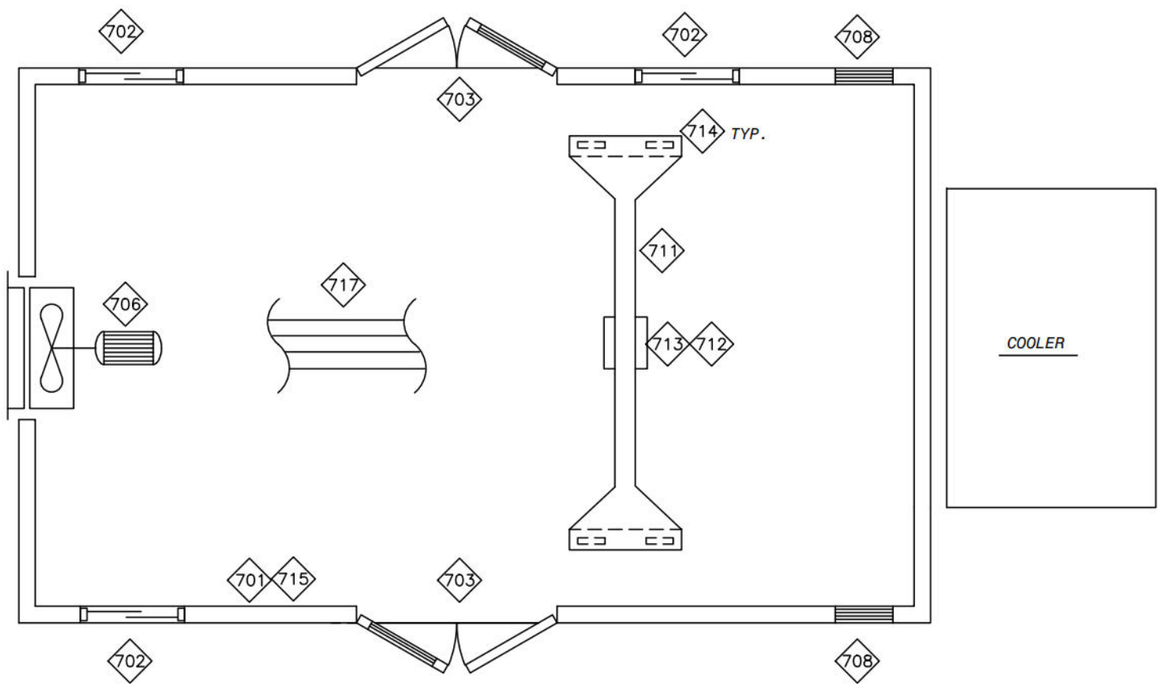

BUILDING EQUIPMENT AND DETAILS

BILL OF MATERIAL

ITEM	QTY.	CODE No.	DESCRIPTION
701	1	AXB-2PROPA	BLDG: 22 G PREPAINTED ST, 20 G PERF ALUM INT, R12 BATT INS
702	4	EBF-WDG	DOUBLE GLAZED 40" X 40" WINDOW C/W 1/2 SCREEN.
703	2	EBF-DD	MAN DOOR, DOUBLE, STEEL, 6' X 7', R4 INSULATED, (1) IWG
			WINDOW, (1)CLOSER (1) PANIC HARDWARE
704			
705			
706	1	EBF-1WR16	(1) 16" EXH FAN, WALL MTD, 1/4 HP 120V/60HZ/1 XP CSA
708	2	EBF-ML1830	LOUVRE, ADJUSTABLE 18" X 30" WITH BIRD SCREEN
709			
711	1	BEN-3BC	3 TON RUNNING BRIDGE CRANE
712	1	BMH-3CH	3 TON MANUAL CHAIN HOIST
713	1	BTR-3BT	3 TON BALL BEARING TROLLEY
714	4	BFL-WC16RB	FLEXELLO WCI-6RB, 6" DIA. WHEEL, 2000# CAPACITY, 1-3/4"
			WIDE, 2-11/32 HUB LENGTH, 3/4" BOLT
715	1	EBF-VB	VAPOUR BARRIER, WALLS AND ROOF AREA OF 4 MIL GENERAL
			PURPOSE POLYETHYLENE
717	20	EBF-R08	LIN FT RIDGE VENT, 8" THROAT C/W MAN DAMP AND BIRD SCREEN

COLOR SCHEDULE

WALL INTERIOR LINER	:	NATURAL
WALL EXTERIOR LINER	:	SAPPHIRE BLUE - DOFASCO 5M-QC261
ROOF INTERIOR LINER	:	NATURAL
ROOF EXTERIOR LINER	:	WHITE - DOFASCO 5M-QC317
TRIM	:	WHITE - DOFASCO 5M-QC317
COOLER	:	ESL STD, GRAY
EQUIPMENT	:	ESL STD, GRAY
SKID	:	ESL STD, GRAY
GRATING	:	BLACK (STANDARD)
ENGINE/COMPRESSOR	:	ESL STD GRAY

DIMENSIONS

WIDTH	:	22'-0"
LENGTH	:	38'-0"
EAVE HEIGHT	:	13'-0"
ROOF SLOPE	:	4:12

CAD
MAKE NO REVISIONS TO THIS REPRODUCIBLE

LAST DRAWING SAVE DATE:
94/09/14 16:52

Enerflex Systems Ltd.

[redacted]

Rev.	Description	By	Date
4	AS BUILT	WNS	94-09-14
3	CRANE CHANGED TO THREE TON	JPG	94-07-20
2	CUSTOMER COLORS ADDED	WNS	94-06-29
1	ISSUE FOR CONSTRUCTION	WNS	94-05-10
0	FOR APPROVAL	TJO	94-04-27

DWN BY: TJO
DATE: 94-04-27
CHK'D BY: KJB
DATE:

TITLE: STANDARD SCHEMATIC BUILDING EQUIPMENT AND DETAILS

DWG. SF94014G

REV. 4

NOTE:
1. SEE THE GENERAL ARRANGEMENT DRAWING FOR THE CORRECT CYLINDER ORIENTATION.

OIL CAP.	140 L
OIL FLOW	95 L/min.

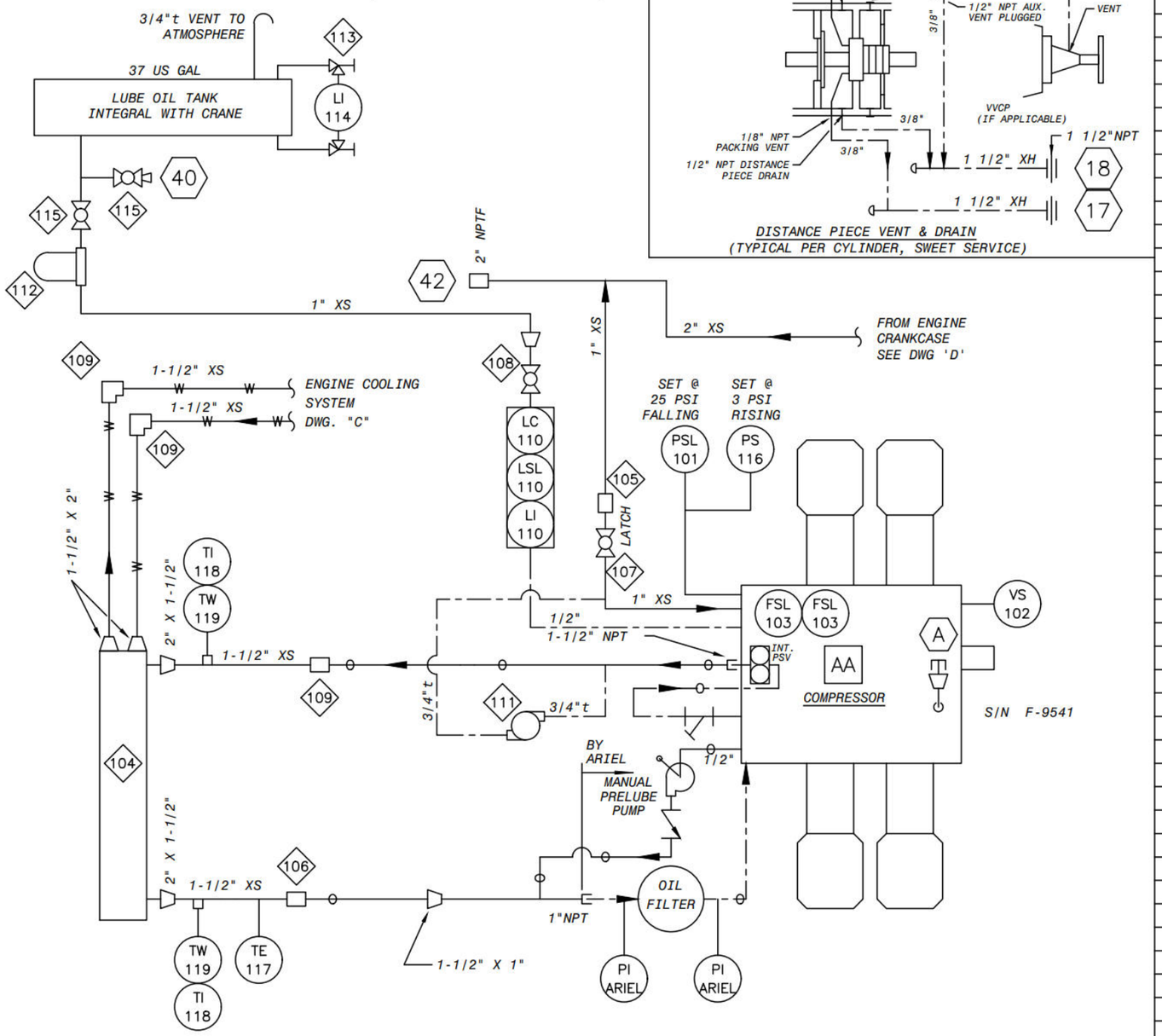

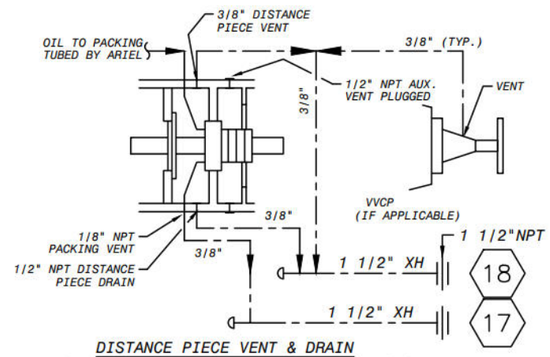

DISTANCE PIECE VENT & DRAIN
(TYPICAL PER CYLINDER, SWEET SERVICE)

BILL OF MATERIAL

ITEM	QTY.	CODE No.	DESCRIPTION
101	1	BTE-69GZ14	PRES SW, CCS 6900GZ14, 500 MWP 9-75R, 3-69F, GP, SS
102	1	BME-5477B	VIB SWITCH,METRIX,5477B-004 24VDC, CSA, XP
103	2	AAR-527E	LUBRICATOR NO FLOW SWITCH , TRABON ELECTRIC 527-100-180
			(ARIEL MTD.) (US)
104	1	AAR-K1024	ARIEL LUBE OIL COOLER, K-1024
105	1	BDR-C10	SLEEVE COUPLING, 1" DRESSER STYLE 90 STRAIGHT
106	1	BDR-C14	SLEEVE COUPLING, 1 1/2" DRESSER STYLE 90 STRAIGHT
107	1	BNI-T5610	BALL VALVE, 1" NPT NIBCO T560-CS-R-25 2000# WOG RP WI
			LATCHING HANDLE
108	1	BGR-391104	BALL VALVE, GRINNELL 1/2" NPT, FIG 3911, 2000 WOG, RP, CS
109	3	BDR-C14L	SLEEVE COUPLING, 1 1/2" DRESSER STYLE 90 90EL
110	1	BKE-LCE9	LEVEL CONTROLLER WI SWITCH, KENCO LCE-9, C.S.A., XP.
111	1	BWI-M100	WILDEN M1 DIAPHRAGM PUMP,ALUM MODEL M1-00/BN/BN/AB
112	1	BBA-BF914	GAS FILTER, BALDWIN BF914 1" NPT WI BF915 ELEMENT
113	1	BPE-N7A	SET GAUGE VALVES, PENBERTHY, N7A, 1/2' NPT MI, NACE
114	1	XSIGHTGLASS	GAUGE GLASS, CLEAR ACRYLIC TUBING, BY SHOP
115	2	BGR-391110	BALL VALVE, GRINNELL, 1" NPT, FIG 3911, 2000# WOG, CS, RP
116	1	BTE-604GZJ1	PRES SW, CCS 604GZJ-1, 500 MWP .8-18R, .3-17.5F, GP, SS
117	1	NPN4-1405	ROSEMOUNT,#0068H21N00B045T22 RTD,-100 C/400 C,304SS T'WELL
118	2	BTR-30251	TI, TREND 33025 2-1/2" STEM BM 3" D DUAL 0-250 DEG. F
119	2	BTW-062	THERMOWELL, 1/2" X 3/4" NPTM X 2-1/2" LONG 304SS U = 1"

FILENAME:	ISSUE#:
A1085.DWG	0
LAST DRAWING SAVE DATE:	
94/09/14 16:41	

Enerflex Systems Ltd.

Rev.	Description	By	Date
2	AS BUILT	WNS	94-09-14
1	ISSUE FOR CONSTRUCTION	WNS	94-05-10
0	FOR APPROVAL	TJO	94-04-27

ORIG DWN BY: TJO
DATE: 94-04-27
APPR'D BY: KJB
DATE:

TITLE: COMPRESSOR EQUIPMENT AND CONTROLS SCHEMATIC
ARIEL JGK/4, ENGINE DRIVE

DWG. SF94014A

OPER'N #: 20

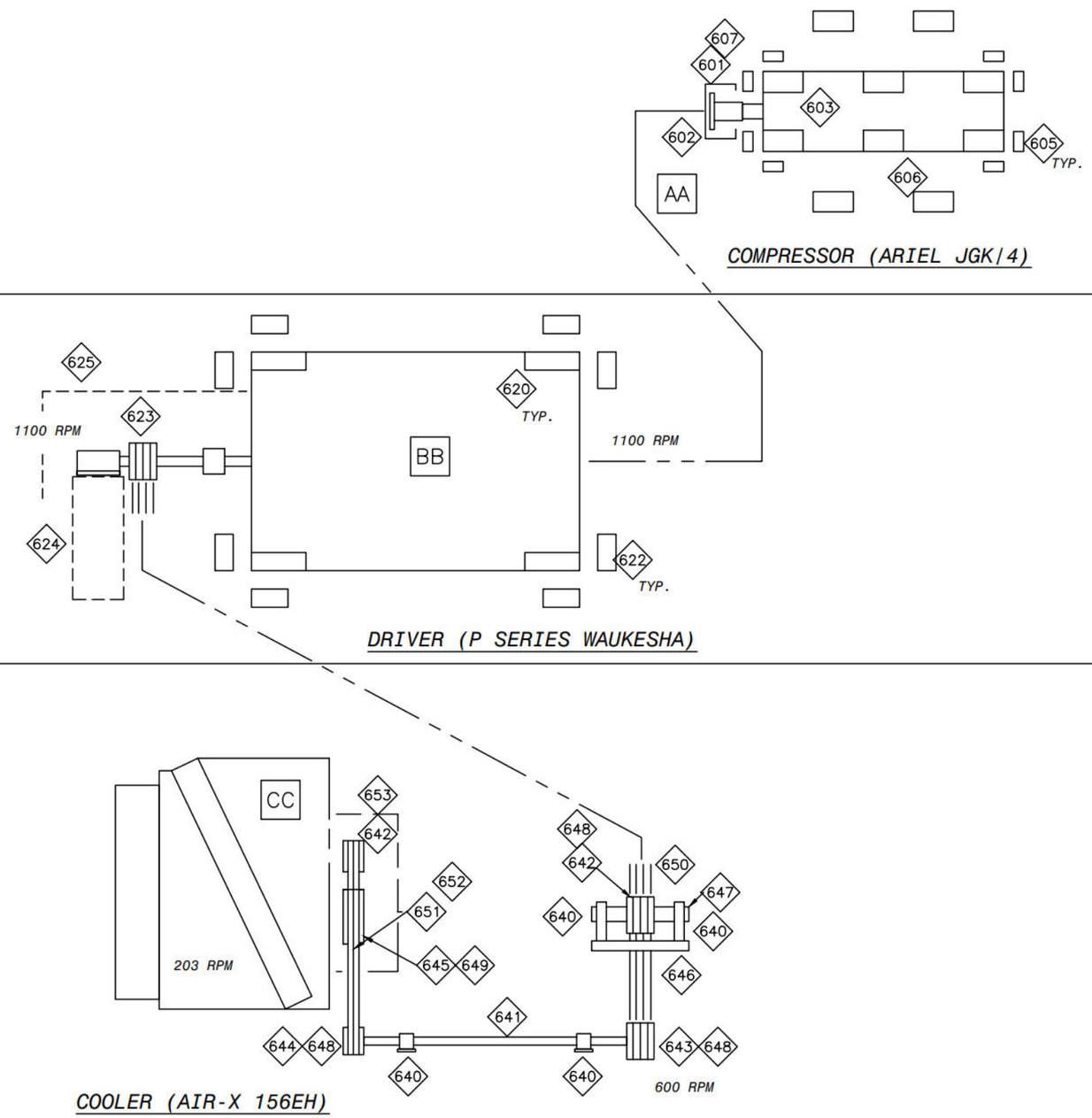

BILL OF MATERIAL

ITEM	QTY.	CODE No.	DESCRIPTION
601	1	BFO-7028SK	CPLG, FORMFLEX 70-28.875 OD SAE-FSH WITH STEEL HUB, BORED
602	1	BLS-CG00A	CPLG GUARD, ALUM NON-SPARK WI SAE 00 BOLTING, BY ESL
603	1	XMOUNTCOMP	FRAME MOUNTING, STANDARD BLOCKS
604			
605	1	BEN-0402	1" JACKING BLOCK FOR ALIGNMENT PER STD. DWG. #02.4002
606	4	AAR-GSK	DISTANCE PIECE SUPPORTS (ARIEL STANDARD)
607	1	EHB-5K	HUB BORE: 4.996" + 0.000" - 0.001" KEY WAY: NONE

ITEM	QTY.	CODE No.	DESCRIPTION
620	1	XMOUNTENG	ENGINE MOUNTING, STANDARD BLOCKS
621			
622	1	BEN-0402	1" JACKING BLOCK FOR ALIGNMENT PER STD. DWG. #02.4002
623	1	NPN	AUXILLIARY DRIVE ASSEMBLY SUPPLIED BY WAUKESHA
624	1	NPN	BEARING SUPPORT PER STANDARD DRAWING
625	1	XBELTGUARD-E	ENGINE BELT GUARD, BUILD TO SUIT

ITEM	QTY.	CODE No.	DESCRIPTION
640	4	BBR-950NE15	PILLOW BLOCK, BROWNING, PB950NE X 2 15/16"
641	1	XJACKSHAFT	EXTENSION SHAFT, 2-15/16"Øx 106"LG, 3/4" x 3/8" KEYWAY
			6" EACH END
642	2	BBR-5C096	SHEAVE, BROWNING 5C096R, WITH R1 BUSHING
643	1	BBR-5C160	SHEAVE, BROWNING 5C160R, WITH R1 BUSHING
644	1	BBR-5C92	SHEAVE,BROWNING 5C92R WITH R1 BUSHING
645	1	BBR-5C270	SHEAVE, BROWNING 5C270R WITH R2 BUSHING
646	1	NPN	TENSION MOUNTING BRACKET PER STANDARD DRAWING
647	1	XJACKSHAFT	SHAFT, 2-15/16"Øx 14"LG, 3/4" x 3/8" KEYWAY
			6-1/4" LG CENTERED
648	3	BBR-7R1	BUSHING, 2 15/16" R1 BROWNING
649	1	BBR-7R2	BUSHING, 2-15/16" R2 BROWNING
650	1	BVB-5CN	V-BELT, SET OF (5) C SECTION NOTCHED (C112)
651	1	BVB-5CN	V-BELT, SET OF (5) C SECTION NOTCHED (C207)
652	1	XBELTGUARD-C	COOLER BELT GUARD BUILT TO SUIT
653	1	BBR-4R1	BUSHING, 2-3/16" R1 BROWNING

Rev.	Description	By	Date
2	AS BUILT	WNS	94-09-14
1	ISSUE FOR CONSTRUCTION	WNS	94-05-10
0	FOR APPROVAL	TJO	94-04-27

FILENAME:
ISSUE#:
LAST DRAWING SAVE DATE: 94/09/14 16:51

Enerflex Systems Ltd.

[redacted]

ORIG DWN BY: TJO
DATE: 94-04-27
APPR'D BY: KJB
DATE:

TITLE: DRIVE TRAIN EQUIPMENT

DWG. SF94014F

OPER'N #: 28

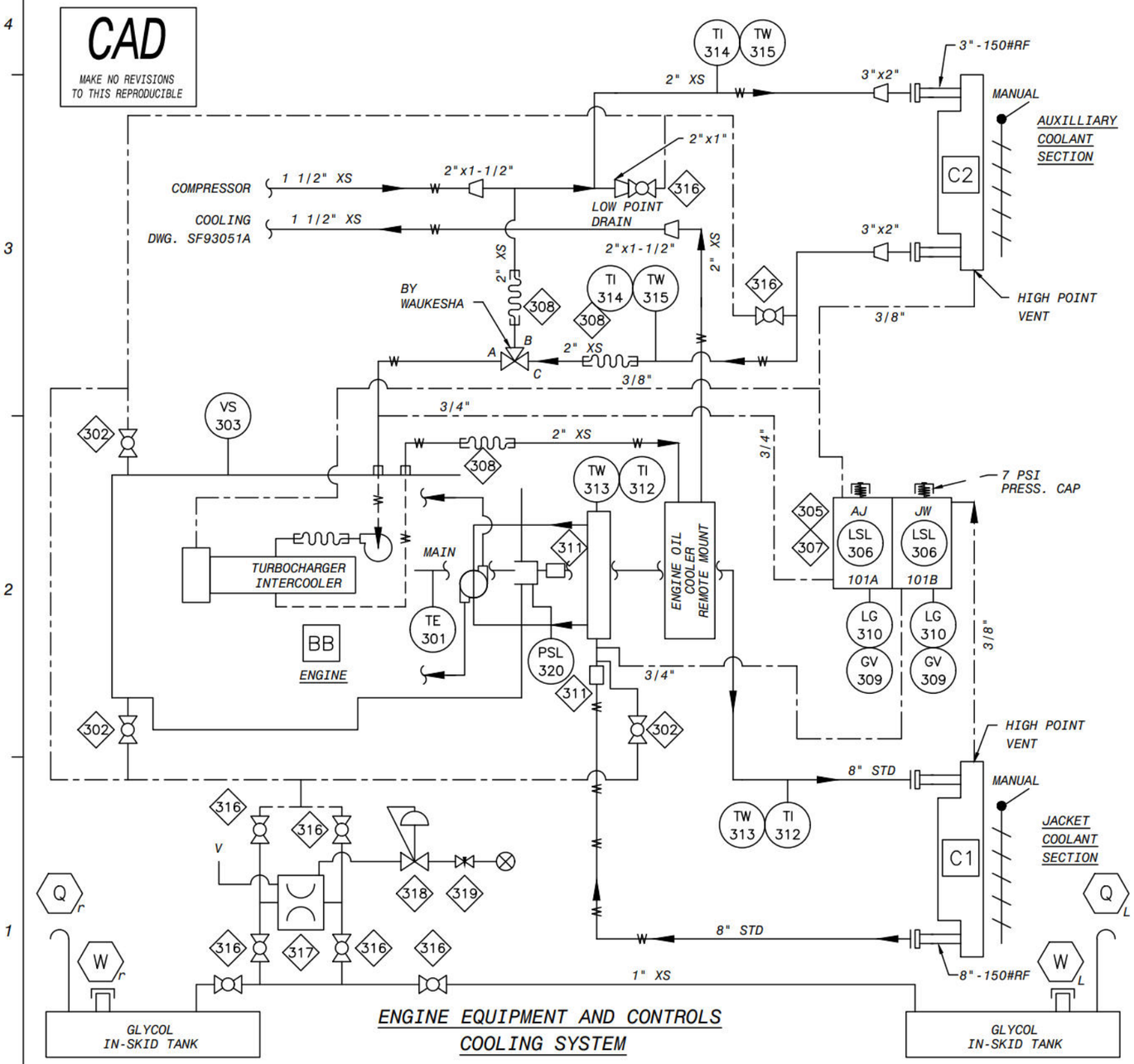

ENGINE EQUIPMENT AND CONTROLS
COOLING SYSTEM

BILL OF MATERIAL

ITEM	QTY.	CODE No.	DESCRIPTION
301	1	NPN4-1405	ROSEMOUNT,#0068H21N00B045T22 RTD,-100 C/400 C,304SS T'WELL
302	2	BNI-T5606	BALL VALVE, NIBCO T560-CS-R-25 3/4" WI LATCHING HANDLE
303	1	BME-5477B	VIB SWITCH,METRIX,5477B-004 24VDC, CSA, XP
305	2	BEN-08101A	BRACKET, COOLER-MOUNTED SURGE TANK DWG. #08.1390
306	2	BMU-L12	LEV SW, MURPHY L-1200 2" XP WI BUOYGLAS FLOAT
307	1	BEN-2277	SURGE TANK, TWO COMP 277L DWG. #08.1003 (SUR-D05)
308	2	BAE-HC20	SET BRAIDED HOSE CONN, 2" AEROQUIP 2045 WI (2) 4412
309	2	BPE-N7A	SET GAUGE VALVES, PENBERTHY, N7A, 1/2' NPT MI, NACE
310	3	BJE-G13	GAUGE GLASS, JERGUSON 5/8" D X 13-1/8" LONG
311	2	BDR-C80	SLEEVE COUPLING, 8" DRESSER STYLE 38
312	2	BTR-30401	TI, TREND 33040 4" STEM BM 3" D DUAL 0-250 DEG. F
313	2	BTW-064	THERMOWELL, 1/2" X 3/4" NPTM X 4" LONG 304SS
314	2	BTR-30251	TI, TREND 33025 2-1/2" STEM BM 3" D DUAL 0-250 DEG. F
315	2	BTW-062	THERMOWELL, 1/2" X 3/4" NPTM X 2-1/2" LONG 304SS
316	8	BNI-T5610	BALL VALVE, NIBCO T560-CS-R-25 1" WI LATCHING HANDLE
317	1	BWI-M100	WILDEN M1 DIAPHRAGM PUMP,ALUM MODEL M1-00/BN/BN/AB
318	1	BFI-06790	REG, 1/4" FISHER #67AFR-226, 35-100 PSI
319	1	BWH-2NVS	NEEDLE VALVE, WHITEY S-1VS4, 1/4" TBG CS
320	1	BTE-69G14	PRES SW, CCS 6900G14, 500 MWP 6-75R, 2-71F, GP, alum.

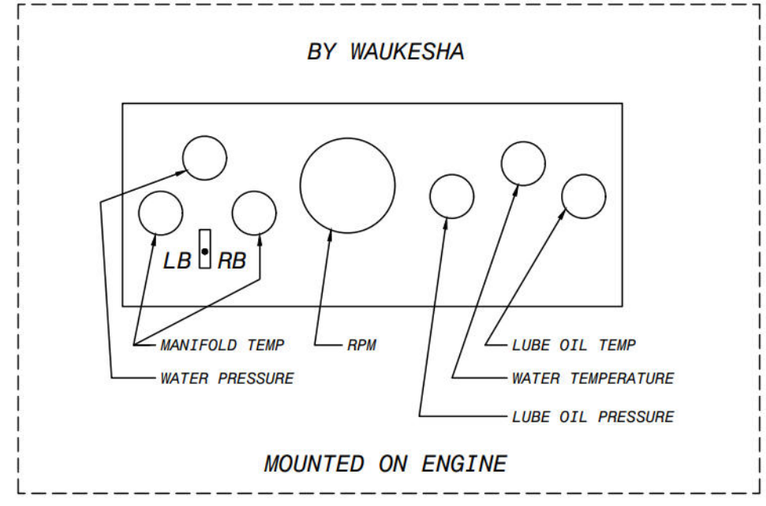

FILENAME:	ISSUE#:
LAST DRAWING SAVE DATE: 94/09/14 16:44	

Enerflex Systems Ltd.

[redacted]

Rev.	Description	By	Date
3	AS BUILT	WNS	94-09-14
2	CUSTOMER REQUEST	WNS	94-08-24
1	ISSUE FOR CONSRTUCTION	WNS	94-05-10
0	FOR APPROVAL	TJO	94-04-27

ORIG DWN BY: TJO
DATE: 94-04-27
APPR'D BY: KJB
DATE:

TITLE: SCHEMATIC
ENGINE EQUIPMENT AND CONTROLS
COOLING SYSTEMS: WAUKESHA P9390 GL

DWG. SF94014C

OPER'N #: 24

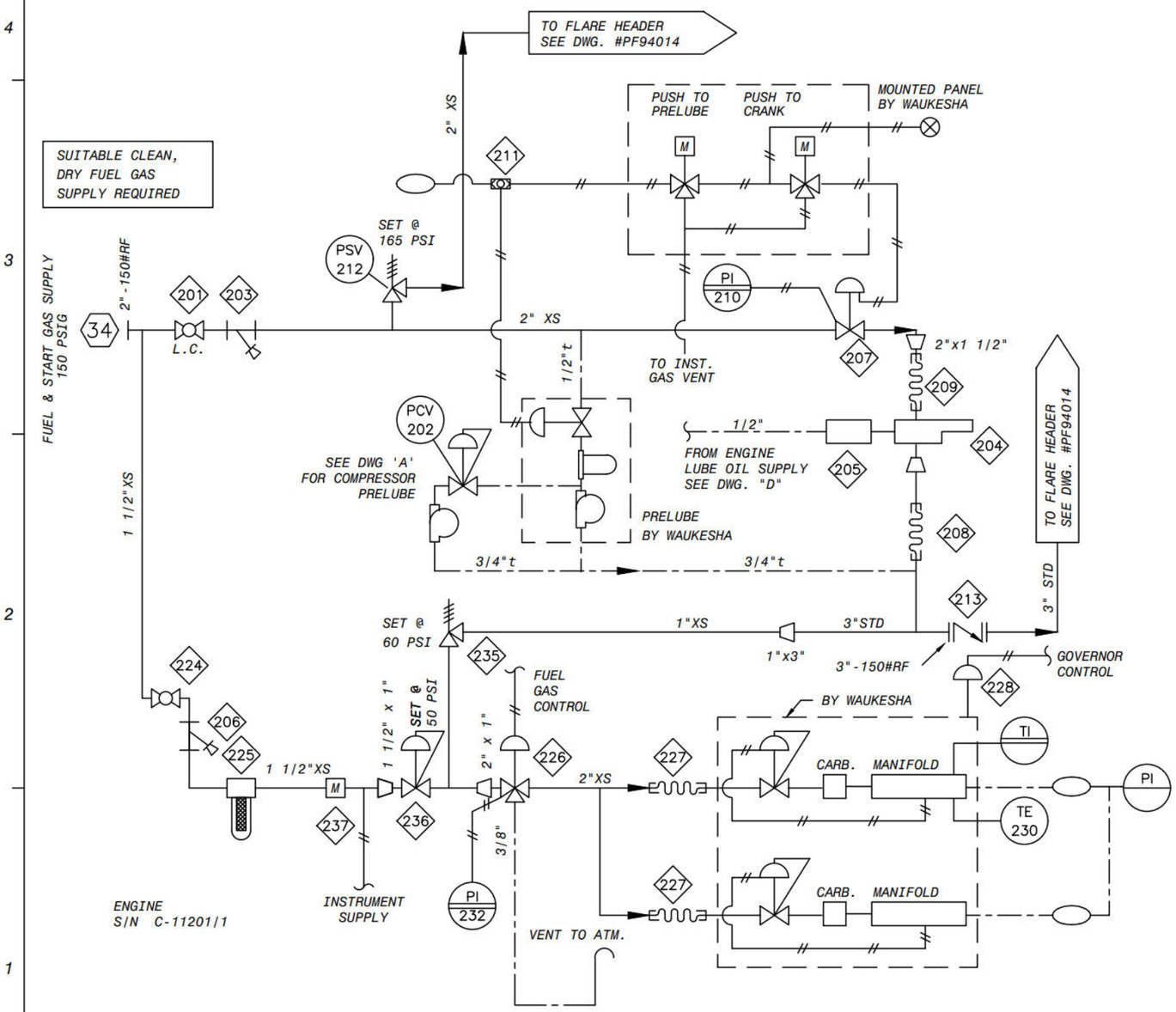

BILL OF MATERIAL

ITEM	QTY.	CODE No.	DESCRIPTION
201	1	BWK-13620	BALL VALVE, WKM B136-CS-02-CS HL 2" RP WI LATCHING HANDLE
202	1	BFI-06790	REG, 1/4" FISHER #67AFR-226, 35-100 PSI
203	1	BST-YSCI20	STRAINER, STREAMFLO Y TYPE CI, 2" 1/32" SS SCREEN
204	1	BIR-810	AIR/GAS STARTER, IR SS810GB03R31 VANE TYPE
			INERTIA ENGAGEMENT
205	1	BIR-HDL2	LUBRICATOR, I.R. HDL-2
206	1	BST-YSCI14	STRAINER, STREAMFLO Y TYPE CI, 1-1/2" 1/32" SS SCREEN
207	1	BAM-4418C2	GAS VALVE, AMOT 4418C3A2A, 2" NPT, 2 WAY
208	1	BBH-3012	BRAIDED STEEL HOSE, 3" NPTM ENDS X 12" LONG
209	1	BBH-2012	BRAIDED STEEL HOSE, 1 1/2" NPTM ENDS, 12" LONG
210	1	BWI-P2S030	PI, WIKA #233.53, 2 1/2" DIAL LF 316 B. TUBE & SKT.
			PANEL MOUNT 1/4" NPTM, DUAL SCALE 0-300 PSI
211	1	BFE-668	SHUTTLE VALVE, FESTO 668-2 OS- 1/4" B, WI NPT ADAPTORS (9396)
212	1	BME-8122	RELIEF VALVE, MERCER 8100, 2" x 2" , .472" OR., SET @ 165 PSI
213	1	NPN	WAFER CHECK VALVE, 3"-150#RF, WHEATLEY, C/W BUNA O-RING 316SS
224	1	BWK-13614	BALL VALVE, 1-1/2" NPT WKM B136-CS-02-CS-HL
			2250#WOG RP WITH LATCHING HANDLE
225	1	BHE-685AP	GAS FILTER, HEADLINE 685AP 1-1/2" NPT, 250 PSIG MAWP WI
			51-230-70C ELEMENT & DRAIN PLUG
226	1	BAM-4418C3	GAS VALVE, 2" NPT AMOT 4418C6A6C 316 SS,
			3 WAY, 600 PSI MWP, NACE
227	2	BBH-2012	BRAIDED STEEL HOSE, 2" NPTM ENDS, 12" LONG
228	1	ZNPN3-13901	AIR/GAS ACTUATOR, FISHER 513, 3-15 PSIG
230	1	NPN4-1405	ROSEMOUNT,#0068H21N00B045T22 RTD,-100 C/400 C,304SS T'WELL
232	1	BWI-P2S010	PI, WIKA #233.53, 2 1/2" DIAL LF 316 B. TUBE& SKT,
			PANEL MOUNT 1/4" NPTM, DUAL SCALE 0-100 PSI
235	1	BFI-R180560	PSV, 1 INCH FISHER 1805-1 CI 20-125 PSI SET @ 60#
236	1	BFI-627450	REG, 1" FISHER 627-498 DI 1/2" OR 35-80# SPR SET 50# 150-750
237	1	BRO-8C175	FUEL GAS METER, ROOTS 8C-175, 1 1/2" FNPT (METRIC)

Rev.	Description	By	Date
6	AS BUILT	WNS	94-09-14
5	RELOCATED ITEM 225 UPSTREAM OF ITEM 237	WNS	94-08-17
4	ALTERNATE START GAS REMOVED	WNS	94-07-22
3	ALTERNATE START GAS ADDED	JPG	94-07-20
2	FUEL & START GAS MANIFOLDED	WNS	94-06-29
1	ISSUE FOR CONSTRUCTION	WNS	94-05-10
0	FOR APPROVAL	TJO	94-04-27

FILENAME: B022.DWG
ISSUE#: 0
LAST DRAWING SAVE DATE: 94/09/14 16:43

Enerflex Systems Ltd.

[redacted]

ORIG DWN BY: T.J.O.
DATE: 94-04-27
APPR'D BY: KJB
DATE:

TITLE: FUEL & START GAS SCHEMATIC
ENGINE EQUIPMENT & CONTROLS
WAUKESHA L-VHP-GL SERIES

DWG. SF94014B
OPER'N #: 22

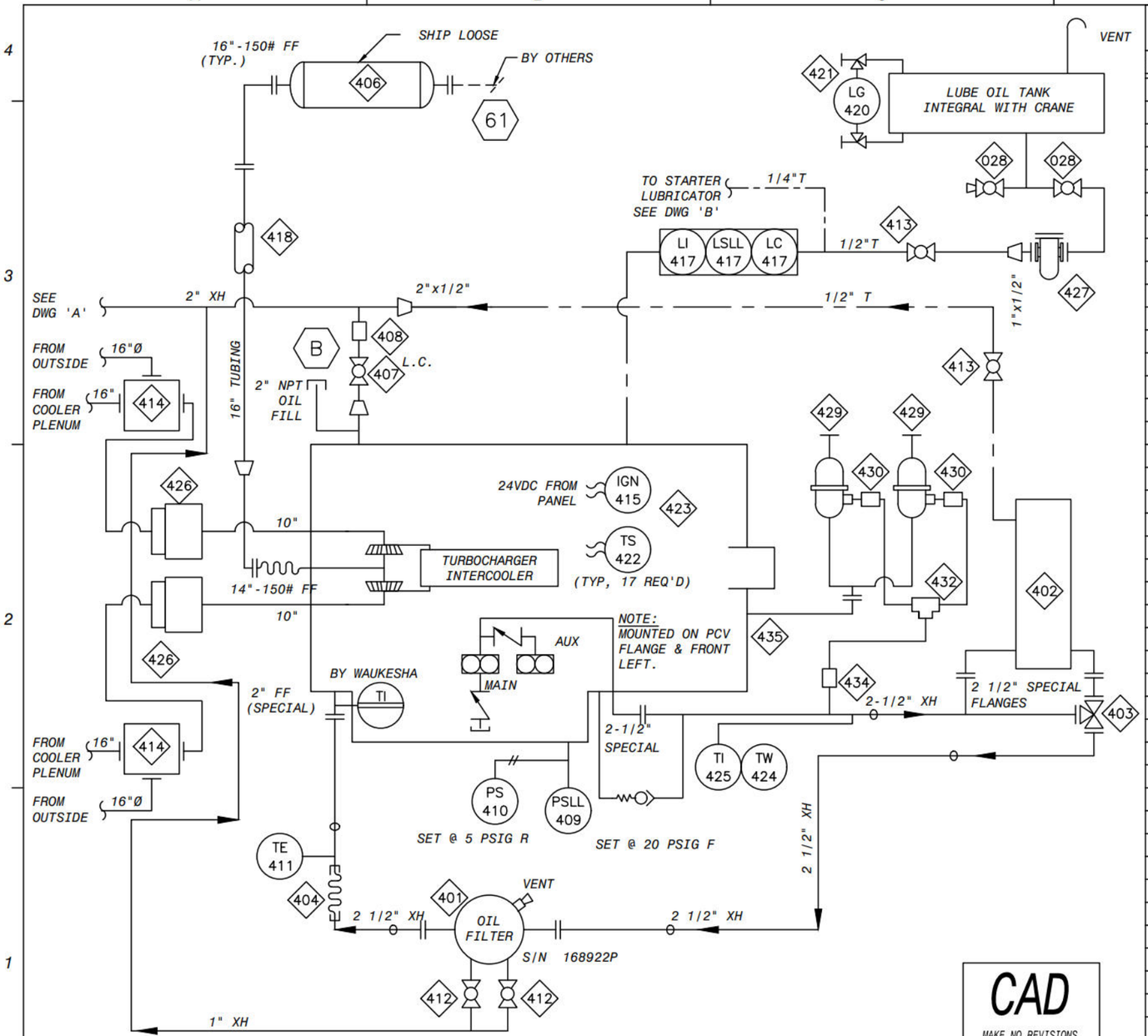

ENGINE EQUIPMENT AND CONTROLS - OIL, IGNITION, AIR, EXHAUST

CAD

MAKE NO REVISIONS TO THIS REPRODUCIBLE

BILL OF MATERIAL

ITEM	QTY.	CODE No.	DESCRIPTION
401	1	ZNPN4-1400	LUBE OIL FILTER BY WAUKESHA
402	1	ZNPN4-1401	LUBE OIL COOLER BY WAUKESHA
403	1	ZNPN4-1402	LUBE OIL THERMOSTATIC BY WAUK
404	2	BBH-2414	BRAIDED STEEL HOSE, 2 1/2" NPTM ENDS, 10" LONG
406	1	BSI-JBT16EE	MUFFLER,SILEX JBT16 CRIT GR END IN/OUT 16" 150#
407	2	BNI-T5620	BALL VALVE, 2" NPT NIBCO T560-CS-R-25 2000# WOG RP
			WI LATCHING HANDLE
408	1	BDR-C20L	SLEEVE COUPLING, 2" DRESSER STYLE 90, 90EL
409	1	BTE-69GZ14	PRES SW, CCS 6900GZ14, 500 MWP 9-75R, 3-69F, GP, SS
410	1	BTE-604GZJ1	PRES SW, CCS 604GZJ-1, 500 MWP .8-18R, .3-17.5F, GP, SS
411	1	NPN4-1406	ROSEMOUNT,#0068H21N00B025T22 RTD,-100C/400C/W 304SS T'WELL
			RANGE -100°C - 400°C
412	2	BNI-T5610	BALL VALVE, 1" NPT NIBCO T560-CS-R-25 2000# WOG RP
			WI LATCHING HANDLE
413	1	BNI-T5604	BALL VALVE, 1/2" NPT GRINNEL 2000# WOG RP
			WI LATCHING HANDLE
414	2	BEN-WAS16	WARM AIR SELECTOR, 16" PER STD. DWG. 05.1023
415	1	NPN4-1408	HARNESS,COILS,PLUGS FOR WAUK. 9390GL CEC IGINITION
			BY WAUKESHA
416	1	NPN4-1409	2 1/2" NPT X 24" LG BRAIDED STEEL HOSE
417	1	BKE-LCE9	LEVEL CONTROLLER WI SWITCH, KENCO LCE-9,CSA XP
418	1	BEX-CF	EXH INS, ALUM CLAD CERAM FIBRE BATT WI GALV LNR & AIR RINGS
419			
420	1	XSIGHTGLASS	GAUGE GLASS, CLEAR ACRYLIC TUBING, BY SHOP
421	1	BPE-N7A	SET GAUGE VALVES, PENBERTHY, N7A, 1/2' NPT MI, NACE
422	18	BOM-2008	THERMOCOUPLE PROBE, OMEGA ATS-2007-90SS C/W SS ADAPTOR
			FOR WAUKESHA VHP G AND GSI (BY WAUKESHA)
423	1	BWH-INSTALL	INSTALLATION CHARGES FOR PYROMETER HARNESS
424	1	BTW-062	THERMOWELL, 1/2" X 3/4" NPTM X 2-1/2" LONG 304SS U = 1"
425	1	BTR-30251	TI, TREND 33025 2-1/2" STEM BM 3" D DUAL 0-250 DEG. F
426	2	ZNPN4-1403	INERTIA TYPE AIR CLEANER BY WAUKESHA
427	1	BBA-BF914	FILTER, BALDWIN BF914 1" NPT WI BF915 ELEMENT
428	2	BGR-391110	BALL VALVE, GRINNELL, 1" NPT, FIG 3911, 2000# WOG, CS, RP
429	2	NPN3-7408	Centrifugal filter,Spinner II MODEL 200 HD
430	2	CAS-THGEU	SWAGELOK SS1210-2-8 3/4" T X 1/2" M 90 EL 316SS
432	1	CAS-TTU	SWAGELOK SS1210-3 3/4" T TEE 316SS
434	1	CAS-TTGEU	SWAGELOK SS1210-2-12 3/4" T X 3/4" M 90 EL 316SS
435	1	NPN3-7409	DUAL MANIFOLD FOR SPINNER FILTERS

FILENAME:	ISSUE#:
LAST DRAWING SAVE DATE: 94/09/14 16:47	

Enerflex Systems Ltd.

[redacted]

Rev.	Description	By	Date
2	AS BUILT	WNS	94-09-14
1	ISSUE FOR CONSTRUCTION	WNS	94-05-10
0	FOR APPROVAL	TJO	94-04-27

ORIGINATED BY: TJO
DATE: 94-04-27
APPR'D BY: KJB
DATE:

TITLE: SCHEMATIC
ENGINE EQUIPMENT AND CONTROLS
WAUKESHA P9390GL,OIL IGNITION,AIR,EXHAUST

DWG. SF94014D

OPER'N #: 26

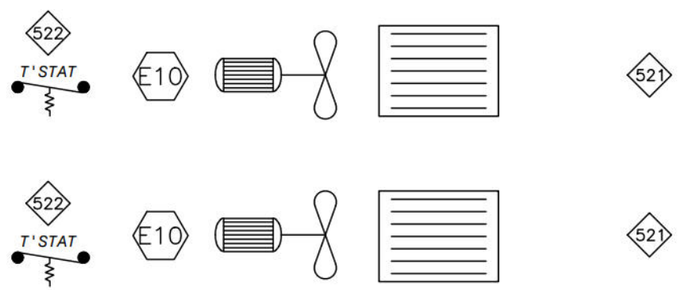

BUILDING EQUIPMENT AND CONTROLS

CAD

MAKE NO REVISIONS TO THIS REPRODUCIBLE

BILL OF MATERIAL

ITEM	QTY.	CODE No.	DESCRIPTION
521	2	BRU-X15	ELECTRIC HEATER, RUFFNECK XL416-15, XP, CSA FAN MOTOR, 15.0 kW, 51,200 BTU/HR, 460V/3P/60
522	2	BRU-XPT	THERMOSTAT, RUFFNECK XTD8-S, 5 - 25 DEG. C. RANGE, XP, CSA, 120/240 V, WALL MOUNT (SHIP LOOSE), INCLUDES WIRING

FILENAME:	ISSUE#:
E001.DWG	0
LAST DRAWING SAVE DATE: 94/09/14 16:49	

Enerflex Systems Ltd.

[redacted]

Rev.	Description	By	Date
3	AS BUILT	WNS	94-09-14
2	VOLTAGE CHANGE	WNS	94-06-29
1	ISSUE FOR CONSTRUCTION	WNS	94-05-10
0	FOR APPROVAL	TJO	94-04-27

ORIG DWN BY: TJO
DATE: 94-04-27
APPR'D BY: KJB
DATE:

TITLE: SCHEMATIC BUILDING HEATERS

DWG. SF94014E

OPER'N #: 72