THERMAL CARE

Mitsubishi LASER

Installation, Operation and Maintenance Manual

Laser Temperature Control Systems

Form 2-317.7

Table of Contents

Foreword

The intent of this manual is to serve as a guide for placing your portable chiller in service and operating and maintaining it properly. This manual is supplemented as required to accommodate any special items that may have been provided for a specific application. The written information contained in this manual, as well as various drawings, are intended to be general in nature. The schematics included in this manual are typical only. Additional copies of wiring diagrams are available upon request. We strive to maintain an accurate record of all equipment during the course of its useful life. While every effort is made to standardize the design features of these chillers, the various options may make it necessary to rearrange some of the components; therefore, some of the general drawings in this manual may differ from your specific unit.

Specific references to current applicable codes, ordinances, and other local laws pertaining to the use and operation of this equipment are avoided due to their ever-changing nature. There is no substitute for common sense and good operating practices when placing any mechanical equipment into operation. We encourage all personnel to familiarize themselves with this manual's contents. Failure to do so may unnecessarily prolong equipment down time.

The chilling equipment uses chemical refrigerants for heat transfer purposes. This chemical is sealed and tested in a pressurized system containing ASME coded vessels; however, refrigerant gas can be released if there is a system failure. Refrigerant gas can cause toxic fumes if it is exposed to fire. These units must be placed in a well-ventilated area, especially if open flames are present.

Failure to follow these instructions could result in a hazardous condition. Consult the unit serial tag for information about the refrigerant type and charge amount.Customers are advised to immediately implement a refrigerant management program including a survey of all equipment to document the type and quantity of refrigerant in each machine. All refrigeration service technicians must be certified by an EPA approved organization. It is recommended that good piping practices are followed and that the information in this manual is adhered to. We cannot be held responsible for liabilities created by substandard piping methods and installation practices external to the chiller.

We trust your equipment will have a long and useful life. If you should have any questions, please contact our Customer Service Department specifying the serial number and model number of the unit as indicated on the nameplate.

Installation

Receiving Inspection

Each unit is skid mounted and boxed or crated to protect it during shipping. Before accepting delivery, check the box or crate for visible damage. If damage is evident, it should be properly documented on the delivery receipt and the box or crate should be immediately removed to allow for detailed inspection of the unit. Check for broken refrigerant lines, oil leaks, damaged controls, or any other major component torn loose from its mounting point. Any sign of damage should be recorded and a claim filed immediately with the shipping company. In order to expedite payment for damages, it is important to record and document damage. An excellent way to do this is by taking pictures. Our Customer Service Department will provide assistance with the preparation and filing of your claims, including arranging for an estimate and quotation on repairs.

Rigging, Handling, and Locating Equipment

The units have a welded steel tube frame that has been designed to allow the unit to be positioned with a forklift. Proper rigging methods must be followed to prevent damage to components. Avoid impact loading caused by sudden jerking when lifting or lowering the chiller. Use pads where abrasive surface contact is anticipated.

The unit is designed for indoor use. If it is necessary to store the chiller in an unheated area when not in use, be sure that all water is drained. A primary concern when designing your unit was serviceability, therefore, the chiller should be located in an accessible area.

Electrical Power

All wiring must comply with local codes and the National Electric Code. Minimum circuit ampacities and other unit electrical data are on the unit nameplate and are shown in the Electrical Specification section at the back of this manual. Measure each leg of the main power supply voltage at the main power source. Voltage must be within the voltage utilization range given in Table 1.

WARNING: This equipment is designed for indoor installation only. Locating this unit outdoors where it is exposed to the elements and/or low ambient conditions (below 50°F) may void the warranty.

Table 1 - Voltage Utilization Range

Rated Voltage	Utilization Range
208	187 to 229

If the measured voltage on any leg is not within the specified range, notify the utility and correct before operating the unit. Voltage imbalance must not exceed two percent. Excessive voltage imbalance between the phases of a three-phase system can cause motors to overheat and eventually fail. Voltage imbalance is determined using the following calculations:

% Imbalance = (Vavg □ Vx) x 100 / Vavg

Vavg = (V1 + V2 + V3) / 3

Vx = phase with greatest difference from Vavg

For example, if the three measured voltages were 198, 207, and 204 volts, the average would be:

(198 + 207 + 204) / 3 = 203

The percentage of imbalance is then:

(203 □ 198) x 100 / 203 = 2.46 %

This exceeds the maximum allowable voltage imbalance of 2%.

A non-fused disconnect switch is provided for power connection to the main power source. A separate lug for grounding the unit is also provided in the main control panel. Electrical phase sequence must be checked at installation and prior to start-up. Operation of the compressor with incorrect electrical phase sequencing will result in mechanical damage to the compressors. The phasing must be checked with a phase sequence meter prior to applying power. The proper sequence should read □ABC□on the meter. If the meter reads □CBA□, switch two line leads on the disconnect switch. All components requiring electric power are wired in-phase at the factory. Do not interchange any load leads that are from the unit contactors or the motor terminals.

WARNING: It is imperative that L1-L2-L3 are connected in the A-B-C phase sequence to prevent equipment damage due to reverse rotation.

CAUTION: The unit requires the main power to remain connected during off-hours to energize the compressor□s crankcase heater. Disconnect main power only when servicing the chiller. The crankcase heater should remain on when the compressor is off to ensure liquid refrigerant does not accumulate in the compressor crankcase.

WARNING: The control panel and safeties are wired such that connecting the appropriate power source to the main terminal block energizes the entire electric circuitry of the chiller. A control transformer has been factory wired to step down the incoming power to the 115-volt control power. Electric power at the main disconnect should be shut off before opening access panels for repair or maintenance. The unit must be properly grounded in compliance with local and national codes.

Electrical Interlocks With Laser

There are six wires that run between the laser and the chiller. This cable allows the two pieces of equipment to communicate with each other. 100 VAC and 24 VDC signals originate from the laser electrical control panel and are delivered to the chiller electrical control panel through the connecting cable supplied with the laser. One set of contacts allows the operator to start the chiller up through the laser controls. There is also a set of open-on-fault contacts that will open if the compressor shuts down or flow is lost to either circuit. Two more sets of open-on-fault contacts are provided to inform the laser if there is a high return water temperature condition in either circuit.

The wires from the communication cable are tagged with wire numbers 300, 301, 308, 309, 313, 314, and 314A. The first six wires should be connected to terminals 60, 61, 62, 65, 66 & 67 respectively. Wire 314A is not used. ***Review the electrical schematic that was provided with the unit for an illustration of the proper communication cable connections***.

WARNING: It is extremely important that these interlocks are wired correctly for proper communications between the laser and chiller. Incorrect wiring can result in electrical shock, and/or damage to the resonator.

Air Cooled Chillers Condenser Air

The performance of an air-cooled condenser is dependent upon maintaining the proper flow of air across the heat exchanger surface. If the air flow is restricted at either the intake or discharge, the cooling capacity of the chiller will be reduced. Reduced air flow may also result in high refrigerant pressure problems that may cause the chiller to shut down. Air flow can also be reduced if the condenser air inlet filters become clogged with dirt. Cleaning this filter should be part of the routine maintenance program for this chiller. The frequency of required cleaning depends on the environment that the chiller is operating in.

The standard rated cooling capacity of this chiller is based upon 95°F (35°C) ambient air temperature. If the air temperature entering the condenser is above 95°F (35°C), the capacity will be reduced approximately 1% per 1°F (0.5°C). Entering air temperature above 115°F (46°C) may result in high refrigerant pressure problems that would shut the unit down. For this reason, it is very important that the chiller be located where the warm discharge air will not be recirculated back into the condenser inlet.

These chillers are designed for indoor usage with normal indoor ambient air temperature entering the condenser. Air temperatures below 60°F (15°C) entering the condenser may result in low refrigerant pressure cold start-up problems.

WARNING: The condenser fans on this chiller are designed to pull the air through the condenser and discharge it out the top of the unit. Ductwork should not be installed on the intake or the discharge of these units.

Interconnecting Hoses

There are three sets of hoses that have been provided with the laser. The 2, 1½" or 1¼" hoses run from the same size FNPT connections on the chiller labeled TO LASER and FROM LASER to the main connections for the resonator. The long ½" hoses run from the ½" FNPT connections on the chiller labeled TO OPTICS and FROM OPTICS to the optics circuit connections. The short ½" hoses run from the ½" FNPT connections on the chiller labeled TO DI and FROM DI to the deionization package provided with the laser.

Start-Up

All chillers are fully tested prior to shipment from the factory. Readings of voltage, amperage, compressor suction and discharge pressures, water inlet and outlet temperatures, water flow rates, etc. are recorded to make sure that all system components are performing up to their specifications. Every unit is factory set to deliver chilled water in accordance with the standard operating specifications for that particular chiller. Due to variables involved with different installations, minor adjustments may be required during the initial start-up to ensure proper operation.

The following start-up procedure should be followed in sequence. If trouble is encountered in putting a chiller in operation, the fault can usually be traced to one of the control or safety devices. This outline can be used as a checklist for the initial start-up and for subsequent start-ups if the chiller is taken out of service for a prolonged period of time.

1. Assure the main power source is connected properly, that it matches the voltage shown on the nameplate of the unit, and that it is within the voltage utilization range given in Table 1. Electrical phase sequence must be checked at installation and prior to start-up. Operation of the compressor with incorrect electrical phase sequencing will result in mechanical damage to the compressor. The phasing must be checked with a phase sequence meter prior to applying power. The proper sequence should read ABC on the meter. If the meter reads CBA, switch two of the line leads on the disconnect switch. All components requiring electric power are wired in-phase at the factory. Do not interchange any load leads that are from the unit contactors or the motor terminals. Once proper power connection and grounding have been confirmed, turn the main power on.

WARNING: It is imperative that L1-L2-L3 are connected in the A-B-C phase sequence to prevent equipment damage due to reverse rotation.

Note: The main power must be on for 24 hours prior to starting the compressor to allow the crankcase heater to sufficiently vaporize any liquid refrigerant that may be present in the compressor crankcase.

2. Check to make sure that all water piping connections to the laser and deionization cartridge are secure.

3. The fill-port for the reservoir is located behind the front right-hand side door just behind the electrical enclosure. Fill the reservoir until it is almost full of water. Distilled water or deionized water is preferable. If tap water is used, the initial deionization cartridge may be used up prematurely. Do not put any glycol in the system.

4. Occasionally, the extreme temperatures during shipment and/or storage will trip the freezestat safety. In addition, vibration from shipment may change the setting of the freezestat. The freezestat is located inside the electrical control panel. Confirm that the safety is still set at 38°F (3°C).

Note: The manufacturer's warranty does not cover the evaporator from freezing. It is vital that the Freezestat is set properly.

5. On the right side of the electrical enclosure, there is a toggle switch labeled Automatic Start. Switch this to the DISABLE position so that the chiller can be started up without operating the laser system.

6. There are two Power buttons on the control panel. One is for the Laser Circuit controls and the other is for the Optics Circuit controls. Press both of these buttons to energize the controls for both circuits.

7. If there are any LEDs illuminated indicating an alarm condition on either circuit, press the appropriate Alarm Reset button. The No Flow LEDs for each circuit will be illuminated until the pumps are started.

Note: The compressor will not start as long as the flow switch is open. A positive flow must be established through the evaporator before the compressor can operate.

8. Press the Start button for the Laser Circuit. At this time, the Laser Circuit pump should begin running. If the controller is calling for cooling, the compressor and fans may also start at this time.

9. The Laser Circuit pressure gauge should now be reading at least 30 PSI. If it is not, check the rotation of the pump, and switch two of the main power leads (after disconnecting main power) if it is running backwards.

10. Temperature adjustment is the next step in putting the chiller in operation. The Laser Circuit Set Point Temperature should be 50°F (10°C). If it is not, adjust the temperature to 50°F (10°C).

11. Once the Laser Circuit is running properly, the Optics Circuit can be started. Press the Start button for the Optics Circuit. A 30 second automatic vent sequence takes place, during which the Optics Circuit pump should start running. Once this sequence is completed, the heater or cooling solenoid valve may be energized if the controller is calling for heating or cooling.

12. The Optics Circuit pressure gauge should read at least 40 PSI. If it does not, check the rotation of the pump. It should be running in the correct direction if the Laser Circuit pump has the correct rotation.

13. Adjust the Set Point Temperature for the Optics Circuit to 77°F (25°C).

14. Shut the chiller off. Check the level of water in the reservoir. The level should have dropped because some of the water is now in the internal piping and hoses to the laser. Top the reservoir off with more water if necessary.

15. Once both circuits are operating properly, switch the Automatic Start Switch to the ENABLE position. The chiller should now start automatically each time the laser is turned on. The laser will also be shut down automatically any time there is an alarm from the chiller. It is strongly recommended that each alarm condition is tested to make sure that the communications between the chiller and laser are operating properly.

Note: In order for the chiller to be started via the signal from the laser, the Automatic Start Switch must be in the ENABLE position, and both the Laser Circuit and the Optics Circuit must have the control power on.

Controller Operation

Laser Circuit Controls

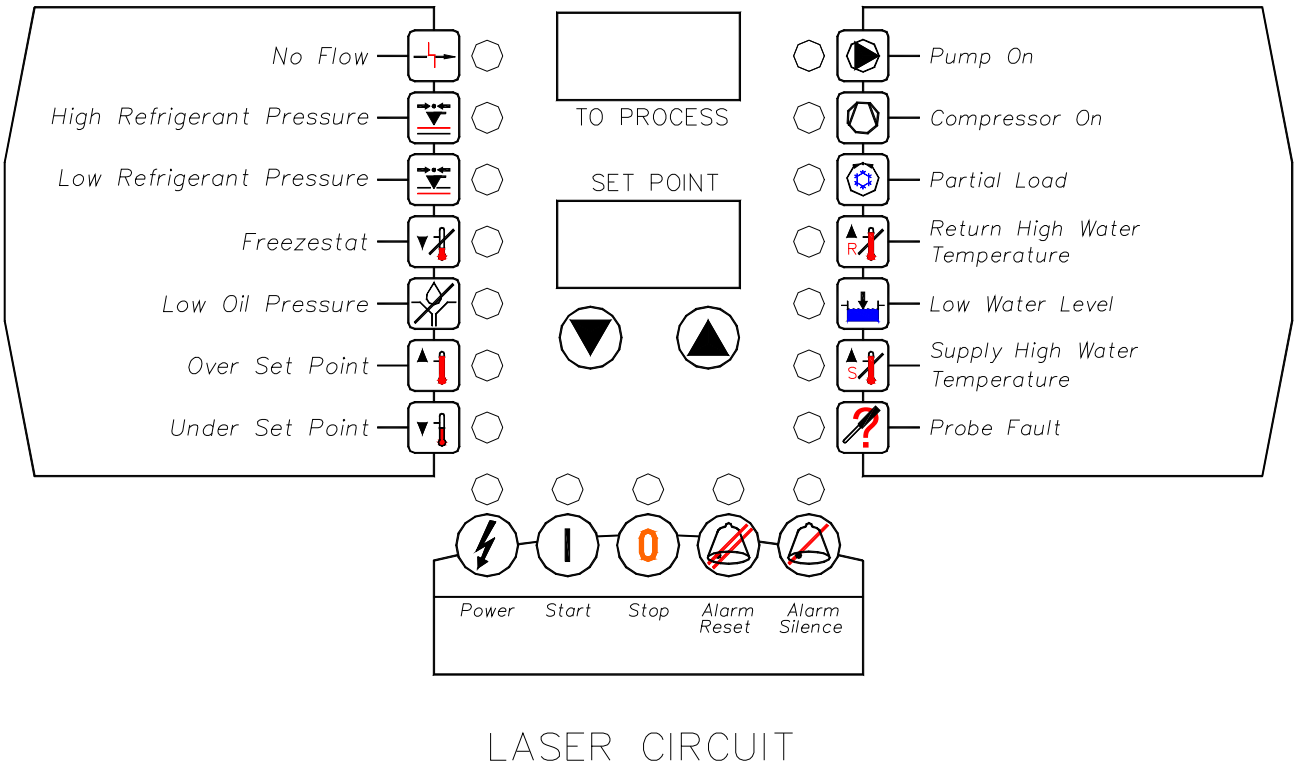

The Laser Circuit is controlled by a microprocessor designed to perform all control functions directly from the front panel. When a button is depressed, a click will be felt and the corresponding LED will be energized. Only one button should be pressed at a time. Table 5 shows the basic control fault logic for the microprocessor controller.

Table 2 Laser Circuit Microprocessor Control Fault Logic

Fault	Alarm Indication	Compressor Shutdown	Pump Shut Off	Alarm Reset Required[1]	Manual Reset Required[2]	Remote Alarm Activated[3]
No Flow	LED	Yes	Yes	No	No	Yes
High Refrigerant Pressure	LED	Yes	Yes	Yes	Yes	Yes
Low Refrigerant Pressure	LED	Yes	No	Yes	No	Yes
Freezestat	LED	Yes	No	Yes	No	Yes
Low Oil Pressure	LED	Yes	Yes	Yes	Yes	Yes
Over Set Point	LED	No	No	No	No	Yes
Under Set Point	LED	Yes	No	Yes	No	Yes
Return High Water Temp.	LED	No	No	No	No	Yes
Low Water Level	LED	No	No	No	No	No
Supply High Water Temp.	LED	No	No	No	No	No
Probe Fault	LED	Yes	Yes	Yes	No	Yes
Low Power	Pr OFF	Yes	Yes	Yes	No	Yes
Pump Overload	Err 126	Yes	Yes	Yes	Yes	Yes
Compressor Overload	Err 127	Yes	Yes	Yes	No	Yes
High Temperature Safety	Err 128	Yes	Yes	Yes	No	Yes

[1] Alarm Reset button or Stop button on control panel must be pressed.
[2] Safety control must be manually reset before the controller can be reset.
[3] Activates the alarm horn (if included) and closes the alarm contact (if included).

Power

Depressing the Power button will switch the control power on or off for the Laser Circuit. Control power must be initiated before either the Start button or remote on/off contacts can start the chiller.

Start

Depressing the Start button will start the Laser Circuit pump and enable the compressor. The compressor and condenser fans will start only if the microprocessor is calling for cooling because the actual To Process temperature is higher than the Set Point temperature.

Note: Once the compressor has cycled off, it will not restart for 2.5 minutes because of an internal anti-cycle time delay.

Stop

Depressing the Stop button will shut off the compressor, both pumps, condenser fans, and clear all fault signals.

Alarm Reset

Depressing the Alarm Reset button will reset any fault indicator that has been activated on the Laser Circuit control board. This includes any LED indicators or alarm codes. The High Refrigerant Pressure, Low Oil Pressure, and Pump Overload require a mechanical safety to be manually reset before the control board can be reset.

Note: If the condition still exists that originally caused the alarm indication, the alarm may be reactivated as soon as it is reset.

Alarm Silence

The Alarm Silence button is only functional if the Alarm Horn option and/or Remote Alarm Contact option has been purchased. If the Alarm Horn option has been purchased, depressing the Alarm Silence button will disable the horn. The horn will not reactivate until the alarm has been reset and a subsequent alarm has been triggered. If the Remote Alarm contacts option has been purchased, depressing the Alarm Silence button will open the contact that was closed when the alarm occurred. The contact will not close again until the alarm has been reset and a subsequent alarm has been triggered.

Lower Set Point Temperature

Each time the Lower Set Point Temperature button is depressed and released, the Laser Circuit Set Point temperature will be decreased by 1°F (or 1°C). If the Lower Set Point Temperature button is held down, the Set Point temperature will continue to decrease until the button is released.

Raise Set Point Temperature

Each time the Raise Set Point Temperature button is depressed and released, the Laser Circuit Set Point temperature will be increased by 1°F (or 1°C). If the Raise Set Point Temperature button is held down, the Set Point temperature will continue to increase until the button is released.

No Flow

The No Flow LED will be illuminated if the flow out to the Laser Circuit is below the preset acceptable level. When the Start button is depressed, this safety is defeated for a period of 20 seconds in order for the pump to establish flow. The No Flow LED may remain illuminated during this 20 second period. This safety will shut off the pump and the compressor. If the chiller has been shut down by the No Flow safety, the Start button must be depressed in order to restart the pump and reset the 20 second time delay.

High Refrigerant Pressure

If the compressor discharge refrigerant pressure exceeds the setting on the high refrigerant pressure safety, the compressor and pump will shut off, and the High Refrigerant Pressure LED will be illuminated. Pressing the Alarm Reset button will reset the High Refrigerant Pressure fault, as long as the High Refrigerant Pressure switch located at the discharge of the compressor has been manually reset.

Low Refrigerant Pressure

If the compressor suction pressure drops below the setting on the low refrigerant pressure safety, the compressor will shut off, the pump will remain running, and the Low Refrigerant Pressure LED will be illuminated. Pressing the Alarm Reset button will reset the Low Refrigerant Pressure fault, as long as the refrigerant pressure has risen back up above the safety's cutout level.

Freezestat

If the water temperature being delivered to the process drops below the setting on the Freezestat, the compressor will shut off, the pump will remain running, and the Freezestat LED will be illuminated. The Freezestat should be set at 38°F (3°C). In order to reset the Freezestat fault, press the Alarm Reset button after resetting the thermostat (labeled Freezestat) inside the electrical enclosure.

Low Oil Pressure

This LED is nonfunctional on these units.

Over Set Point

The Over Set Point LED will be illuminated if the To Process temperature exceeds the Set Point temperature by more than 20°F (11°C). This fault causes only an alarm indication (horn and/or remote contact) and the chiller will continue to operate. Although the Over Set Point LED will turn on immediately whenever the temperature is out of range, the alarm relay is disabled for 30 minutes after start-up or after a change in set point. The alarm will automatically clear when the To Process temperature is no more that 20°F (11°C) above the Set Point temperature.

Under Set Point

The Under Set Point LED will be illuminated if the To Process temperature drops below the Set Point temperature by more than 20°F (11°C). This fault will shut off the compressor, but the pump will continue to run. Although the Under Set Point LED will turn on immediately whenever the temperature is out of range, the alarm relay is disabled for 30 minutes after start-up or after a change in set point. Pressing the Alarm Reset button will reset this fault.

Pump On

The Pump On LED will be illuminated whenever the Laser Circuit pump is running. If the pump is shut off due to a safety, the Pump On LED will turn off. The Start button must be pressed in order to restart the pump.

Compressor On

The Compressor On LED will be illuminated whenever the compressor is running. The Compressor On LED will cycle on and off with the compressor. The compressor will not come on unless the pump is already running and the To Process temperature is above the Set Point temperature.

Note: During normal operation, the compressor may cycle on and off. An internal anti-cycle time delay will not allow the compressor to restart for 2.5 minutes after it has cycled off. For air cooled units the fans will cycle off with the compressor.

Partial Load

The Partial Load LED will be illuminated whenever the microprocessor energizes the hot gas bypass solenoid valve. This valve is cycled in order for the chiller to maintain a constant To Laser temperature even when there is only a partial load. The longer that this LED stays on, the more unused excess capacity is available from the chiller. If the Partial Load LED stays off, the chiller is fully loaded by the heat from the process. If the Partial Load LED stays on, the chiller has a very small load on it from the process. If this low load condition persists, the To Laser temperature may begin to drop below the Set Point temperature, and when it reaches 5°F (3°C) below the Set Point temperature, the compressor will cycle off. The compressor will come back on when the To Laser temperature rises back up to the Set Point temperature and the anti-cycle 2.5 minute time delay has timed out.

Return High Water Temperature

The Return High Water Temperature LED will be illuminated if the From Laser temperature rises above 86°F (30°C). The Return High Water Temperature LED will turn off when the From Laser temperature drops back down below 72°F (22°C). The compressor and pump will continue to run, but a remote alarm signal will be sent to the laser system to shut the resonator down. This safety is defeated for a period of twenty minutes from the time the chiller remote on/off contacts are closed by the signal from the laser.

Low Water Level

This LED is nonfunctional on these units.

Supply High Water Temperature

The Supply High Water Temperature LED will be illuminated if the To Process temperature rises more than 10°F (or 5°C) above the Set Point temperature. The Supply High Water Temperature LED will turn off when the water temperature is less than 10°F (or 5°C) above the Set Point temperature. This fault will not stop operation of the chiller.

Probe Fault

The Probe Fault LED will illuminate if the signal from the thermocouple is out of tolerance. This fault will also shut off the compressor and the pump. Pressing the Alarm Reset button will reset this alarm.

Changing Temperature Display Scale

This unit was shipped to display temperatures in either °F or °C. The following step can be followed to determine what temperature scale is in use and will provide instructions as to how to change from one scale to another.

1. With the power connected and the control power off, hold down the Stop button. While holding the Stop button down, press the Power button. When the controller illuminates, release both buttons.

2. The To Process display will read "Unt". The Set Point display will show either "F" or "C" depending on the current display units selected. If "F" is displayed the temperature display is in °F mode. If "C" is displayed the temperature display is in °C mode.

3. To change from °F to °C press the Lower Set Point Temperature button. To change from °C to °F press the Raise Set Point Temperature button.

4. The Set Point display now indicates the desired display units.

5. Press and release the Start button to store the new selection into the controller memory.

6. Press and release the Power button once to exit the function. Press and release the Power button again to restore controller power.

Diagnostic Error Codes

Several different error codes may be displayed on the digital readouts labeled Actual Temperature and Set Point. Most of the possible error codes indicate some type of failure in the microprocessor controller. There are also four specific faults listed below which show up as error codes. If there is an error code other than these four, try to reset the chiller by shutting the power off and then turning it back on. If this does not work, make a note of the error code and contact our Customer Service Department for further assistance.

Pr Off
If the chiller is running and main power is discontinued or drops more than 10% below the normal operating voltage, the unit will shut down and the Pr OFF fault will be indicated on the digital displays. Pressing the Stop button will clear this fault condition.

Err 126
The Err 126 fault code will be indicated on the digital displays if the pump overload has tripped. In order to reset this fault; press the Alarm Reset button after resetting the pump overload inside the electrical enclosure.

Err 127
The Err 127 fault code will be indicated on the digital display if the internal compressor motor winding thermostat or the external compressor motor overload have tripped. The internal compressor motor winding thermostat will automatically reset when the temperature drops back into the normal operating range. The external compressor motor overload must be manually reset. The compressor motor overload is located inside the electrical enclosure. Once the internal compressor motor winding thermostat resets and/or the external compressor overload has been reset, press the Alarm Reset button to reset the fault.

Err 128
The Err 128 fault code will be indicated on the digital displays if the chiller has been shut off due to the high temperature safety. This safety will shut off both the pump and compressor. This safety is triggered if the To Process temperature rises more than 10°F (5.5°C) above the maximum operating temperature. Pressing the Alarm Reset button will reset this fault.

Optics Circuit Controls

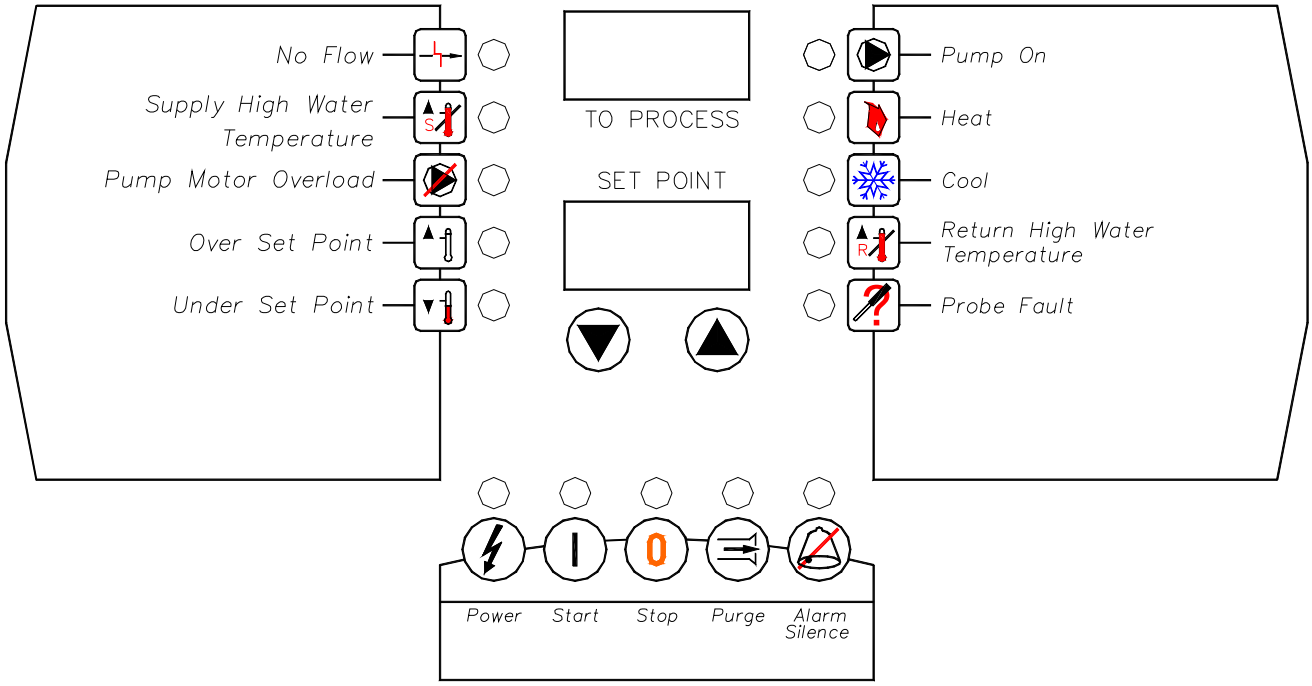

OPTICS CIRCUIT

The Optics Circuit is controlled by a microprocessor designed to perform all control functions directly from the front panel. When a button is depressed, a click will be felt and the corresponding LED will be energized. Only one button should be pressed at a time. Table 3 shows the basic control fault logic for the microprocessor controller.

Table 3 Optics Circuit Microprocessor Control Fault Logic

Fault	Alarm Indication	Pump Shut Off	Heater Shut Off	Alarm Reset Required[1]	Manual Reset Required[2]	Remote Alarm Activated[3]
No Flow	LED	Yes	Yes	No	No	Yes
Supply High Water Temp.	LED	Yes	Yes	Yes	No	Yes
Pump Motor Overload	LED	Yes	Yes	Yes	Yes	Yes
Over Set Point	LED	No	No	No	No	Yes
Under Set Point	LED	No	No	No	No	Yes
Return High Water Temp.	LED	No	No	No	No	Yes
Probe Fault	LED	Yes	Yes	Yes	No	Yes
Low Power	Pr OFF	Yes	Yes	Yes	No	Yes

[1] Alarm Reset button or Stop button on control panel must be pressed.
[2] Safety control must be manually reset before the controller can be reset.
[3] Activates the alarm horn (if included) and closes the alarm contact (if included).

Power

Depressing the Power button will switch the control power on or off for the Optics Circuit. Control power must be initiated before either the Start button or remote on/off contacts can start this circuit.

Start

Depressing the Start button will start the Optics Circuit venting sequence provided that the Laser Circuit pump is already running. For the first thirty seconds after the Start button has been depressed, the cooling solenoid valve will be opened. During the next thirty seconds, the cooling solenoid valve will remain open and the Optics Circuit pump will come on. This one minute vent sequence will eliminate any air entrapped in the system and establish water flow throughout the Optics Circuit. After the vent sequence, the microprocessor will initiate its control sequence in order to maintain the Optics Circuit supply water temperature by cycling the heater and cooling solenoid valve.

Stop

Depressing the Stop button will shut off the Optics Circuit pump, disable the microprocessor control program, and clear all fault signals except for Return High Water Temperature.

Purge

Depressing this button will hold open the cooling solenoid valve for as long as the button is pressed. This button is defeated if the pump is running. For this particular chiller design, there should be no reason to use this feature.

Alarm Silence

The Alarm Silence button is only functional if the Alarm Horn option and/or Remote Alarm Contact option has been purchased. If the Alarm Horn option has been purchased, depressing the Alarm Silence button will disable the horn. The horn will not reactivate until the alarm has been reset and a subsequent alarm has been triggered. If the Remote Alarm contacts option has been purchased, depressing the Alarm Silence button will open the contact that was closed when the alarm occurred. The contact will not close again until the alarm has been reset and a subsequent alarm has been triggered.

Lower Set Point Temperature

Each time the Lower Set Point Temperature button is depressed and released the Optics Circuit Set Point temperature will be decreased by 1°F (or 1°C). If the Lower Set Point Temperature button is held down, the Set Point temperature will continue to decrease until the button is released.

Raise Set Point Temperature

Each time the Raise Set Point Temperature button is depressed and released the Optics Circuit Set Point temperature will be increased by 1°F (or 1°C). If the Raise Set Point Temperature button is held down, the Set Point temperature will continue to increase until the button is released.

No Flow

The No Flow LED will be illuminated if the flow out to the Optics Circuit is below the preset acceptable level. This safety will shut off the pump and disable the microprocessor control program. If the Optics Circuit has been shut down by the No Flow safety, the Start button must be depressed to re-initiate the venting sequence.

Supply High Water Temperature

The Supply High Water Temperature LED will be illuminated if the To Process temperature rises above 110°F (43°C). This safety will shut off the pump and disable the microprocessor control program. This safety can be reset by pressing the Stop button as long as the water temperature has dropped back below 100°F.

Pump Motor Overload

The Pump Motor Overload LED will be illuminated if the overload for the Optics Circuit pump has been tripped. This safety will shut off the pump and disable the microprocessor control program. In order to reset this fault, press the Stop button after resetting the Optics Circuit pump motor overload inside the main electrical enclosure.

Over Set Point

The Over Set Point LED will be illuminated if the To Process temperature exceeds the Set Point temperature by more than 20°F (11°C). This fault causes only an alarm indication and the circuit will continue to operate. Although the Over Set Point

LED will turn on immediately whenever the temperature is out of range, the alarm relay is disabled for 30 minutes after start-up or after a change in set point. The alarm will automatically clear when the To Process temperature is no more that 20°F (11°C) above the Set Point temperature.

Under Set Point

The Under Set Point LED will be illuminated if the To Process temperature drops below the Set Point temperature by more than 20°F (11°C). This fault causes only an alarm indication and the circuit will continue to operate. Although the Under Set Point LED will turn on immediately whenever the temperature is out range, the alarm relay is disabled for 30 minutes after start-up or after a change in set point. The alarm will automatically clear when the temperature comes back into range.

Pump On

The Pump On LED will be illuminated whenever the Optics Circuit pump is running. If the pump is shut off due to a safety, the Pump On LED will turn off. The Start button must be pressed in order to restart the pump.

Note: The pump will not restart immeddiately when the Start button is depressed because the vent sequence must be completed first. After the first thirty seconds of this sequence, the pump should come back on.

Heat

The Heat LED will be illuminated whenever the microprocessor energizes the heater inorder to raise the Optics Circuit actual temperature. Normally, the heater will only be energized in order to bring the water temperature up from room temperature during start-up.

Cool

The Cool LED will be illuminated whenever the microprocessor energizes the cooling solenoid valve in order to lower the Optics Circuit actual temperature. This light should cycle on and off during normal operation.

Return High Water Temperature

The Return High Water Temperature LED will be illuminated if the Optics Circuit return water temperature rises above 118°F (48°C). The Return High Water Temperature LED will turn off when the Optics Circuit return water temperature drops back down below 104°F (40°C). The circuit will continue to operate, but a remote alarm signal will be sent to the laser system to shut the resonator down. This safety is defeated for a period of twenty minutes from the time the chiller remote on/off contacts are closed by the signal from the laser.

Probe Fault

The Probe Fault LED will illuminate if the signal from the thermocouple is out of tolerance. This fault will also shut off the compressor and the pump. Pressing the Alarm Reset button will reset this alarm.

Changing Temperature Display Scale

This unit was shipped to display temperatures in either °F or °C. The following step can be followed to determine what temperature scale is in use and will provide instructions as to how to change from one scale to another.

7. With the power connected and the control power off, hold down the Stop button. While holding the Stop button down, press the Power button. When the controller illuminates, release both buttons.

8. The To Process display will read "Unt". The Set Point display will show either "F" or "C" depending on the current display units selected. If "F" is displayed the temperature display is in °F mode. If "C" is displayed the temperature display is in °C mode.

9. To change from °F to °C press the Lower Set Point Temperature button. To change from °C to °F press the Raise Set Point Temperature button.

10. The Set Point display now indicates the desired display units.

11. Press and release the Start button to store the new selection into the controller memory.

12. Press and release the Power button once to exit the function. Press and release the Power button again to restore controller power.

The unit is now set and will remain set with the selected temperature scale until the above steps are repeated.

Diagnostic Error Codes

Several different error codes may be displayed on the digital readouts labeled Actual Temperature and Set Point. Most of the possible error codes indicate some type of failure in the microprocessor controller. If one of these error codes appear, try to reset the controller by shutting the power off and then turning it back on. If this does not work, make a note of the error code and contact our Customer Service Department for further assistance. The following error code may also appear in the digital displays.

Pr Off
If the circuit is running and main power is discontinued or drops more than 10% below the normal operating voltage, the unit will shut down and the Pr OFF fault will be indicated on the digital displays. Pressing the Stop button will clear this fault condition.

Laser/Chiller Communications

Remote Start/Stop

This interlock allows the laser to send a 100 VAC signal to start the chiller up automatically when the laser is turned on. When the 100 VAC signal is discontinued, the chiller will shut off. In order for the remote start/stop to be enabled, the local/remote switch on the chiller must be in the REMOTE position and the two microprocessor controllers must have the power on.

Chiller Fault

This contact closure is broken if any of the following conditions occur:

1. Laser pump contactor is de-energized indicating a loss of flow to Laser Circuit.
2. Optics pump contactor is de-energized indicating a loss of flow to Optics Circuit.
3. Compressor shuts off on freezestat safety.
4. Compressor shuts off on low refrigerant pressure safety.
5. Compressor shuts off on high refrigerant pressure safety.
6. Compressor shuts off due to the internal thermal overload.
7. There is a thermocouple probe fault condition.
8. There is an over set point or under set point condition.

Laser Water Temperature Interlock

This set of contacts will open if the water returning from the laser circuit exceeds 86°F (30°C). The contacts will remain open until the water temperature drops to 72°F (22°C). This alarm interlock is disabled for a period of twenty minutes from the time that the chiller receives the start-up signal.

Optics Water Temperature Interlock

This set of contacts will open if the water returning from the optics circuit exceeds 118°F (48°C). The contacts will remain open until the water temperature drops to 104°F (40°C). This alarm interlock is disabled for a period of twenty minutes from the time that the chiller receives the start-up signal.

Chiller Operation

Laser Circuit

The laser circuit pump draws chilled water from the 20-gallon reservoir and pushes it through the main laser cooling circuit after passing a thermocouple and a check valve in the chiller. The thermocouple sends a signal back to the microprocessor to control laser temperature set point. The check valve prevents water from moving from the laser to the chiller during chiller shutdown. The water is delivered to the laser, where it picks up the heat from the laser process before returning to the chiller. As the water comes back into the chiller, it passes another thermocouple, a solenoid valve, and a Y-strainer. The thermocouple is used for the Return Water Temperature Alarm that sends a signal back to the laser in the event that the temperature becomes to high. The solenoid valve prevents water from draining back to the chiller from the laser during chiller shutdown. The y-strainer filters debris from the water, keeping the evaporator from becoming blocked.

The water enters the evaporator where the heat is transferred from the water to the refrigerant. Adjusting the amount of heat tranferred from the water to the refrigerant controls the temperature of the water being delivered to the main circuit of the laser. After the water leaves the evaporator, it passes the freezestat sensor and flow switch. The freezestat is a safety device used to prevent water from freezing in the evaporator. The flow switch is a safety device used to shut down the laser and the chiller if there is a loss of water flow. After the water passes these two devices, it returns back to the reservoir.

A small side stream of water is branched off the Laser Circuit supply line. The side stream flow goes through the deionizer cartridge that stands seperately from the chiller. The water returns from this cartridge directly into the reservoir.

Optics Circuit

The Optics Circuit pump draws cooling water from the Laser Circuit and delivers it to the optics and shutter circuits on the laser. After leaving the pump, the water passes through a heater that is used to raise the Optics Circuit temperature quickly up to set point when the system is started up. The water then passes a thermocouple and flow switch before being delivered to the laser. The thermocouple is used to read the temperature of the water being delivered out to the optics circuit of the laser. This temperature is supplied to the microprocessor so that it can maintain the Optics Circuit temperature at the set point. The flow switch is a safety that will shut the laser down in the event flow is discontinued out to the optics and shutter circuits of the laser.

The water is circulated through the optics and shutter circuits of the laser where it picks up the excess heat. It then returns to the suction of the Optics Circuit pump, after passing a thermocouple. The thermocouple is used for the Return Water Temperature Alarm that sends a signal back to the laser to shut it down if the temperature gets to high.

If the actual water temperature starts to rise above the set point temperature, the cooling solenoid valve will open, letting some of the warm return water exit the circuit. This water is then replaced with cold water from the Laser Circuit, thus bringing the circuit temperature back down.

Refrigerant Circuit

The heat that is transferred in the evaporator from the water to the refrigerant is used to change the state of the refrigerant from a liquid to a gas. After leaving the evaporator, the refrigerant passes to the compressor.

The compressor is the heart of the refrigeration circuit. It takes the cool, low-pressure gas entering the compressor and compresses it, which creates the hot, high-pressure gas that exits the compressor. Since the compressor is not 100% efficient, some extra heat is added to the refrigerant as it is being compressed.

The hot, high-pressure gas that exits the compressor is delivered to the condenser. In the condenser, the heat is transferred from the refrigerant into the air that is passing through the condenser. As the heat is transferred, the refrigerant changes from a gas to a liquid. The condenser has been sized to remove the heat from the process load and the heat that was added by the compressor.

After leaving the condenser, the liquid refrigerant passes through the service ball valve, filter drier and sight glass. The filter drier removes any particles or moisture from the refrigerant. The sight glass is used to monitor the stream of liquid refrigerant. The liquid refrigerant then passes through the thermal expansion valve (TXV) which meters the flow into the evaporator where the process starts all over again.

Capacity and temperature control is accomplished with a hot gas bypass system. If the chiller were catering to a partial load from the process, the coolant supply temperature would normally tend to drop. The microprocessor senses this drop in temperature, and opens the hot gas bypass solenoid valve. When this valve is open, some of the hot compressor discharge gas is directed to the inlet of the evaporator instead of going through the condenser. This reduces the chiller's cooling capacity and puts an additional heat load on the evaporator, which brings the coolant temperature back up to set point. The microprocessor cycles the hot gas solenoid valve as is needed to maintain the coolant temperature even with loads as low as 25% of full capacity.

If the heat load from the laser is extremely low, or even nonexistent, the hot gas bypass system will not be able to put enough of a load on the evaporator, and the water temperature will drop. When the water temperature drops 5°F (3°C) below the laser set point temperature, the controller will shut the compressor off. When the water temperature rises back to the set point temperature, the compressor comes back on. The compressor will remain off for at least two minutes to prevent short cycling.

Chiller Construction

Compressor

The chiller is equipped with a hermetic scroll compressor. Both the compressor and the motor are encased together and solidly mounted in the cabinet. The compressor is unidirectional and will only pump refrigerant when properly phased. The cool refrigerant suction gas cools the motor windings, and there is an internal thermal overload to protect the windings from overheating. The compressor is lubricated with oil that travels throughout the system with the refrigerant.

Air Cooled Condenser

The condenser is constructed of heavy gauge copper tubing and aluminum fins for maximum heat transfer capabilities. The condenser has been generously sized so the chiller can operate with full cooling capacities in ambient air temperatures of up to 95°F (35°C). When the ambient air temperatures are above 95°F (35°C) the chiller will lose approximately 1% of its cooling capacity per 1°F (0.5°C) above 95°F (35°C). The chiller should be

able to operate with ambient temperatures of up to 115°F (46°C).

The fans draw cool air through the condensers and discharge warm air out the top of the cabinet. These units are equipped with condenser fans that are designed to draw sufficient air through the chiller as long as there are no obstructions. The fans are not designed to draw air through ductwork or discharge air through ductwork. The discharge air will be approximately 35°F (20°C) warmer than the intake air.

Evaporator
The evaporator is constructed of stainless steel plates and copper brazing. The refrigerant passes between every other set of plates, while the water flows on the other side of the plates in the opposite direction.

Thermostatic Expansion Valve
This valve (refered to as the TXV) separates the high pressure/high temperature side of the refrigeration circuit (the condenser side) from the low pressure/low temperature side of the refrigeration circuit (the evaporator side). The TXV maintains constant superheat at the evaporator outlet, regardless of process load, by precisely metering the amount of refrigerant into the evaporator. Superheat is the difference between the saturated evaporative temperature and the actual measured temperature at the TXV sensor bulb. The superheat is factory set for 10°F to 12°F (5°C to 6°C) and should never exceed 15°F (8°C). Only a trained refrigeration technician should adjust this valve.

Refrigerant Sight Glass
The refrigerant sight glass is located in the liquid line immediately ahead of the expansion valve. It allows the operator or service technician to observe the flow of liquid refrigerant. Prolonged periods of foaming in the sight glass may indicate a low refrigerant condition or a restriction in the liquid line.

Note: Occasional bubbling in the sight glass may occur at a time when load conditions are changing and the thermostatic expansion valve is adjusting to the new conditions. This momentary occurrence is a result of normal chiller operation.

The sight glass can also be used to check if there is moisture in the refrigeration system. If there is moisture in the system, the green dot in the center of the sight glass will turn yellow. If this occurs, the chiller should be serviced immediately.

Refrigerant Filter Drier
The filter drier is located in the liquid line between the condenser and the refrigerant sight glass. It is designed to remove any moisture and/or foreign matter that may have gotten into the refrigerant stream. Moisture and foreign matter can cause serious damage to the components of a refrigeration system. For this reason, it is important that the chiller be equipped with a clean filter drier. Replace the filter drier if any of the following conditions occur.

1. The refrigeration system is opened to the atmosphere for repairs or maintenance.

2. Moisture is indicated in the sight glass (the green dot has changed to yellow).

3. An excessive pressure drop develops across the filter drier. This is indicated by a significant temperature difference between the filter inlet and outlet.

Pressure Relief Valve
The pressure relief valve is located in the liquid line after the condenser. It is designed to relieve refrigerant pressure under severe conditions in order to protect the refrigeration circuit components from damage.

Hot Gas Bypass Valve
This valve is located in the refrigerant line that runs from the compressor discharge to the evaporator inlet. It is designed to artificially load the chiller when the chiller is catering to a partial load from the laser. This is accomplished by directing some of the hot compressor discharge gas directly back into the evaporator instead of going through the condenser. The microprocessor controller controls the amount of hot gas used. Eliminating cycling of the compressor is extremely desirable as it significantly extends its lifetime expectancy.

Reservoir
The reservoir is mounted to brackets inside the cabinet. The reservoir is made of polyethylene and is fully insulated. A level glass is included so the coolant level can be observed. There is a removable cover on the top of the reservoir. During chiller operation the reservoir should be at least half full.

Laser Circuit Pump
The close-coupled centrifugal pump is equipped with a mechanical seal and is constructed of stainless steel. The pump is factory tested for the specified operating conditions. The ODP pump motor meets NEMA specifications and industry standards.

Optics Circuit Pump
The close-coupled centrifugal pump is equipped with a mechanical seal and is constructed of stainless steel. The pump is factory tested for the specified operating conditions. The ODP pump motor meets NEMA specifications and industry standards.

Pressure Gauges
There are two pressure gauges mounted on the back panel of the chiller. These gauges display the discharge pressure of each of the pumps. These pressures can be used to determine the approximate points on the pump curves in which the pumps are operating.

Heater
A 1.5 kW immersion type low watt density heater is included in the Optics Circuit to quickly bring the water temperature up to set point at start-up.

Cooling Water Solenoid Valve
This ¼" solenoid valve is used to maintain the Optics Circuit temperature by controlling the amount of cooling water that is allowed to enter the circuit.

Y-Strainer
A Y-strainer with a 20-mesh screen is installed in the water line to help protect the evaporator passages from becoming clogged. Since the system is filled with clean deionized water and all of the wet-side components are constructed of nonferrous materials, this filter should not require maintenance very often.

Deionization Cartridge
The deionization cartridge is shipped seperately with the chiller. It maintains the conductivity of the chilled water at an acceptable level for the laser. If the conductivity reaches a certain maximum level, an alarm will be activated. At this point, the deionization cartridge must be changed. Shut-off valves have been included to facilitate replacement.

Fan Cycling Controls
The fan cycling controls are designed to turn one condenser fan on and off in order to maintain a minimum compressor discharge refrigerant pressure. During normal operation, the fan will cycle on and off based upon the process heat load and ambient air conditions.

High Refrigerant Pressure Switch
The High Refrigerant Pressure switch is designed to limit the compressor discharge pressure within the design parameters of the compressor. The switch is located on the discharge side of the compressor and can be reset by first pressing the manual reset button located on the High Refrigerant Pressure safety switch and then by pressing the Alarm Reset button on the control panel. The setting on this switch is set to cut out at 375 PSIG (26 Kg/cm2) for air cooled units.

Low Refrigerant Pressure Switch
The Low Refrigerant Pressure switch is designed to limit the compressor suction pressure to within the designed parameters of the compressor. The switch is located on the suction side of the compressor and can be reset by pressing the Alarm Reset button on the control panel. The setting on this switch is set to cut out at 25 PSIG (1.7 Kg/cm2) and cut in at 55 PSIG (4 Kg/cm2).

Freezestat
The freezestat control is an electronic thermostat that senses the water temperature separately from the microprocessor controller. This safety is designed to limit the temperature of the water leaving the evaporator and prevent possible freeze-up situations. This control should be set at 38°F.

Note: It is critical that the freezestat is set properly. Freeze-ups can cause extensive damage to several components in the chiller, and the warranty does not cover repairs required due to a freeze-up.

The Freezestat is located inside the main electrical enclosure. If the chiller shuts down due to the Freezestat, the Alarm Reset button on the control panel must be pressed before the chiller can be restarted.

Laser Circuit Flow Switch
This flow switch is located in the Laser Circuit water return line to the reservoir. It is designed to shut the chiller and the laser down if there is insufficient flow through the main circuit of the laser. The switch is adjustable; however, no adjustments should be made without prior approval from the factory. If the chiller shuts down due to low water flow in the Laser Circuit, it can be restarted by pressing the Start button on the Laser Circuit control panel. This switch is disabled for twenty seconds after the Start button is pressed or the remote on signal is received. This allows the pump to develop flow and make the switch.

Optics Circuit Flow Switch

This flow switch is located in the Optics Circuit water supply line. It is designed to shut the Optics Circuit and the laser down if there is insufficient flow through the optics and shutter circuits of the laser. The switch is adjustable; however, no adjustments should be made without prior approval from the factory. If the circuit shuts down due to low water flow in the Optics Circuit, it can be restarted by pressing the Start button on the Optics Circuit control panel.

Preventive Maintenance

Once your portable chiller has been placed into service, the following maintenance procedures should be adhered to as closely as possible. The importance of a properly established preventive maintenance program cannot be overemphasized. Taking the time to follow these simple procedures will result in substantially reduced downtime, reduced repair costs, and an extended useful lifetime for the chiller.

To make this as simple as possible, a checklist should be prepared which lists the recommended service operations and the times at which they are to be performed. At the end of this section we have included a checklist that can be used for this purpose. Notice that there are locations for voltage readings, amperages, etc. so that they can be monitored over time. With this information, maintenance personnel may be able to correct a potential problem before it causes any downtime. For best results, these readings should be taken with a full heat load from process, preferably with similar operating conditions each time. The following is a list of suggested periodic maintenance.

Once a Week

1. Check the air inlet filters for dirt and debris. Clean out with compressed air if necessary.

2. Check to make sure that the Actual temperatures are maintaining reasonably close to the Set Point temperatures. If the temperature stays more than 5°F (3°C) away from the set point, there may be a problem with the chiller. If this is the case, refer to the Troubleshooting Chart or contact the Customer Service Department.

3. Check the pump discharge pressures using the gauges on the back panel of the chiller. Investigate further if the pressures start to stray away from the normal operating pressures.

4. Check the water level in the reservoir. Replenish if necessary. Used distilled or deionized water if possible.

5. Check circulation pumps for leaks in the seal area. Replace pump seals if necessary.

6. Check refrigerant sight glass for air bubbles or moisture indication. If the sight glass indicates that there is a refrigeration problem, have the unit serviced as soon as possible.

Once a Month

7. With the main disconnect shut off and locked out, check the condition of electrical connections at all contactors, starters and controls. Check for loose or frayed wires.

8. Check the incoming voltage to make sure it is within 10% of the design voltage for the chiller.

9. Check the amp draws to each leg of the compressor, fans and pumps to confirm that they are drawing the proper current.

Every Three Months

10. Have a qualified refrigeration technician inspect the operation of the entire chiller to ensure that everything is operating properly.

Preventive Maintenance Checklist

Model # _____
Serial # _____

Maintenance Activity	Week Number												
	1	2	3	4	5	6	7	8	9	10	11	12	13
Date													
Clean Condenser Coil and Inlet Filter													
Laser Circuit Temperature Control													
Optics Circuit Temperature Control													
Laser Circuit Discharge Pressure													
Optics Circuit Discharge Pressure													
Water Level In Reservoir													
Water Leaking From Pump Seals													
Refrigerant Sight Glass													
Electrical Connections													
Incoming Voltage													
Compressor L1 Amps													
Compressor L2 Amps													
Compressor L3 Amps													
Laser Pump L1 Amps													
Laser Pump L2 Amps													
Laser Pump L3 Amps													
Optics Pump L1 Amps													
Optics Pump L2 Amps													
Optics Pump L3 Amps													
Fan A L1 Amps													
Fan A L1 Amps													
Fan A L3 Amps													
Fan B L1 Amps													
Fan B L2 Amps													
Fan B L3 Amps													
Clean Y-Strainer													
Refrigerant Circuit Check													
Refrigerant Suction Pressure													
Refrigerant Discharge Pressure													
Refrigerant Superheat													

Troubleshooting

Problem	Possible Cause	Remedy
Compressor will not start	Compressor overload	Check supply voltage, amperage of each leg, contactor and wiring, overload set point
	Compressor contactor	Replace if faulty
	Microprocessor control board	Replace if faulty
	Compressor failure	Contact Customer Service Department for assistance
Laser Circuit Pump will not start	Pump overload	Check supply voltage, amperage of each leg, contactor and wiring, overload set point
	Pump contactor	Replace if faulty
	Laser Circuit Microprocessor control board	Replace if faulty
	Pump failure	Replace if faulty
Optics Circuit Pump will not start	Pump overload	Check supply voltage, amperage of each leg, contactor and wiring, overload set point
	Pump contactor	Replace if faulty
	Optics Circuit Microprocessor control board	Replace if faulty
	Pump failure	Replace if faulty
Low refrigerant pressure	Low refrigerant charge	Contact refrigeration service technician
	Refrigerant leak	Contact refrigeration service technician
	Low refrigeration pressure sensor	Check for proper range, replace if faulty
	Microprocessor control board	Replace if faulty
High refrigerant pressure	Dirty air filters	Clean filters
	Air flow obstruction	Make sure chiller is installed in accordance with recommendations in this manual
	High ambient air temperature	Ambient temperature must be reduced below 110°F (43°C)
	Condenser fan motor	Replace if faulty
	Condenser fan cycling control	Confirm proper operation, replace if faulty
	Refrigerant circuit overcharged	Contact refrigeration service technician
	High refrigerant pressure sensor	Replace if faulty
	Microprocessor control board	Replace if faulty

Problem	Possible Cause	Remedy
Freezestat	Low flow through evaporator	Adjust flow to proper level
	Freezestat control module	Check for proper setting, replace if faulty
	Laser Circuit microprocessor control board	Replace if faulty
	Freezestat sensor	Replace if faulty
Low pump discharge pressure (either pump)	Pump running backwards	Switch 2 legs of the incoming power
	Pump pressure gauge	Replace if faulty
	Pump failure	Replace if faulty
	Excessive flow	Reduce flow
High pump discharge pressure (either circuit)	Closed valves in process piping	Open valves
	Obstruction in piping or process	Remove obstruction
	Clogged Y-strainer (Laser Circuit only)	Clean strainer
	Pressure gauge	Replace if faulty
Insufficient cooling in Laser Circuit (temperature continues to rise above set point)	Process load too high	Check to make sure chiller is properly sized for process load
	Water flow through evaporator too high or too low	Adjust flow to proper level
	Insufficient condenser cooling	See High Refrigerant Pressure
	Hot gas bypass valve stuck open	Contact refrigeration service technician
	Refrigeration circuit problem	Contact refrigeration service technician
	Laser Circuit microprocessor control board	Replace if faulty
	Thermocouple	Replace if faulty
Insufficient cooling in Optics Circuit (actual temperature remains above set point)	Laser Circuit is not running	Start Laser Circuit before running Optics Circuit
	Cooling water solenoid stuck in closed position	Remove and clean. Replace if faulty.
	Optics Circuit microprocessor control board	Replace if faulty
	Thermocouple	Replace if faulty
	Heater remains energized	Check heater contactor
Overcooling in Optics Circuit (actual temperature remains below set point)	Cooling water solenoid stuck in open position	Remove and clean. Replace if faulty.
	Optics Circuit microprocessor control board	Replace if faulty
	Thermocouple	Replace if faulty

Table 4 - Electrical Specifications

Model	Voltage	Compressor		Laser Circuit Pump		Optics Circuit Pump		Condenser Fans		Optics Circuit Heater	Unit MCA[2]
		Qty	RLA[1]	Qty	FLA	Qty	FLA	FLA	Qty		
LQ2A1003LXD	208	1	31.7	1	6.4	1	4.9	2	4.1	5.9	68
LQ2A1503LXB	208	1	62.2	1	6.4	1	2.2	2	7.2	5.9	110
LQ2A2003LXB	208	2	42.2	1	6.4	1	4.9	2	7.2	5.9	141
LQ2A2503LXD	208	2	62.2 & 42.2	1	8.9	1	6.4	2	7.2	5.9	159

Notes:
1. RLA (Rated Load Amps) based on a percentage of the MMTC (Maximum Must Trip Current) as established by the manufacturer in accordance with UL Standard 465.
2. MCA (Minimum Circuit Ampacity) based on 125% of the compressor RLA plus 100% of remaining components FLA plus 2.4 amp for the control circuit.

Figure 1 - Pump Curves - LQ2A1003LXD, LQ2A1503LXB, LQ2A2003LXD

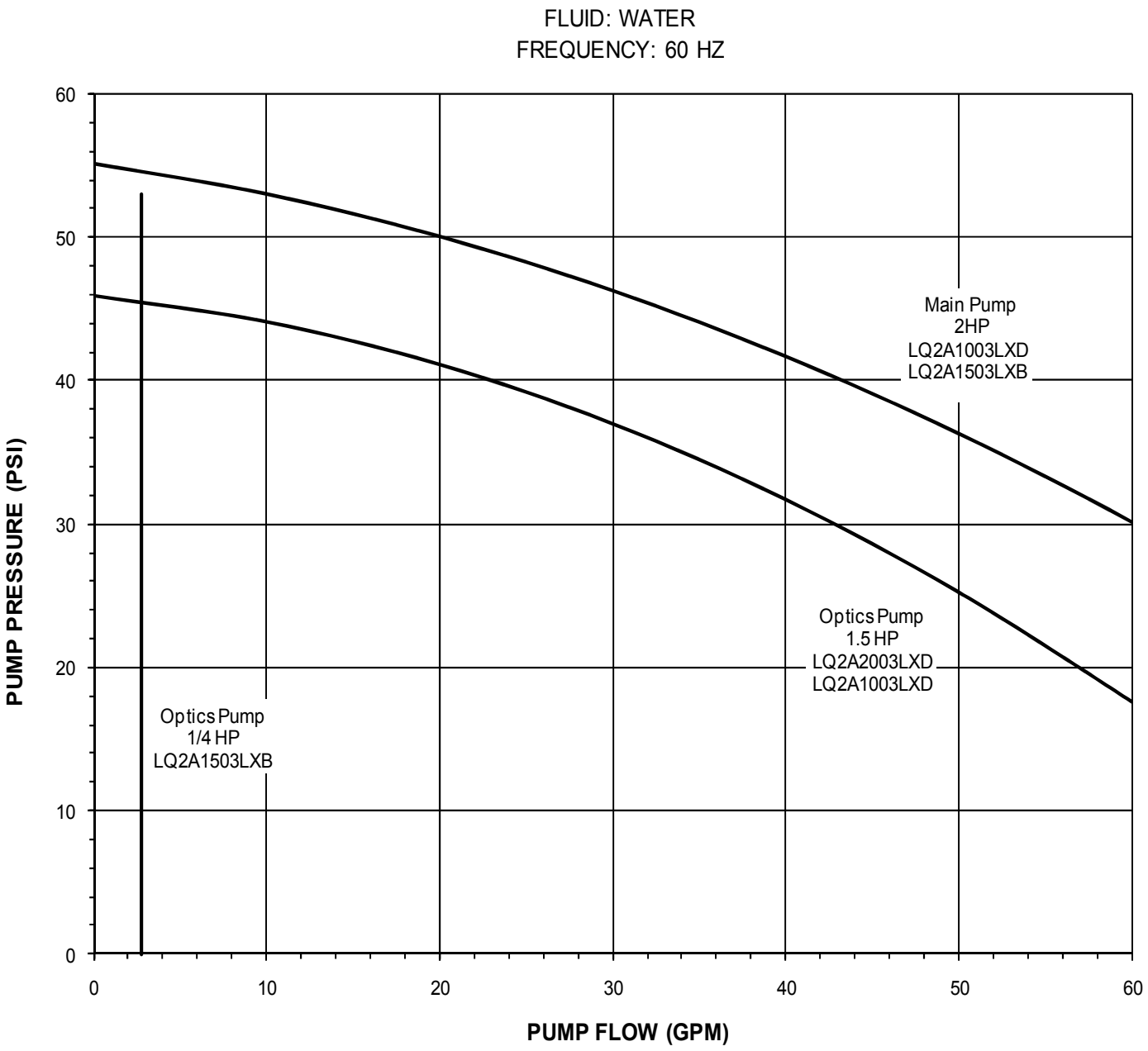

Figure 2 - Pump Curves - LQ2A2503LXD

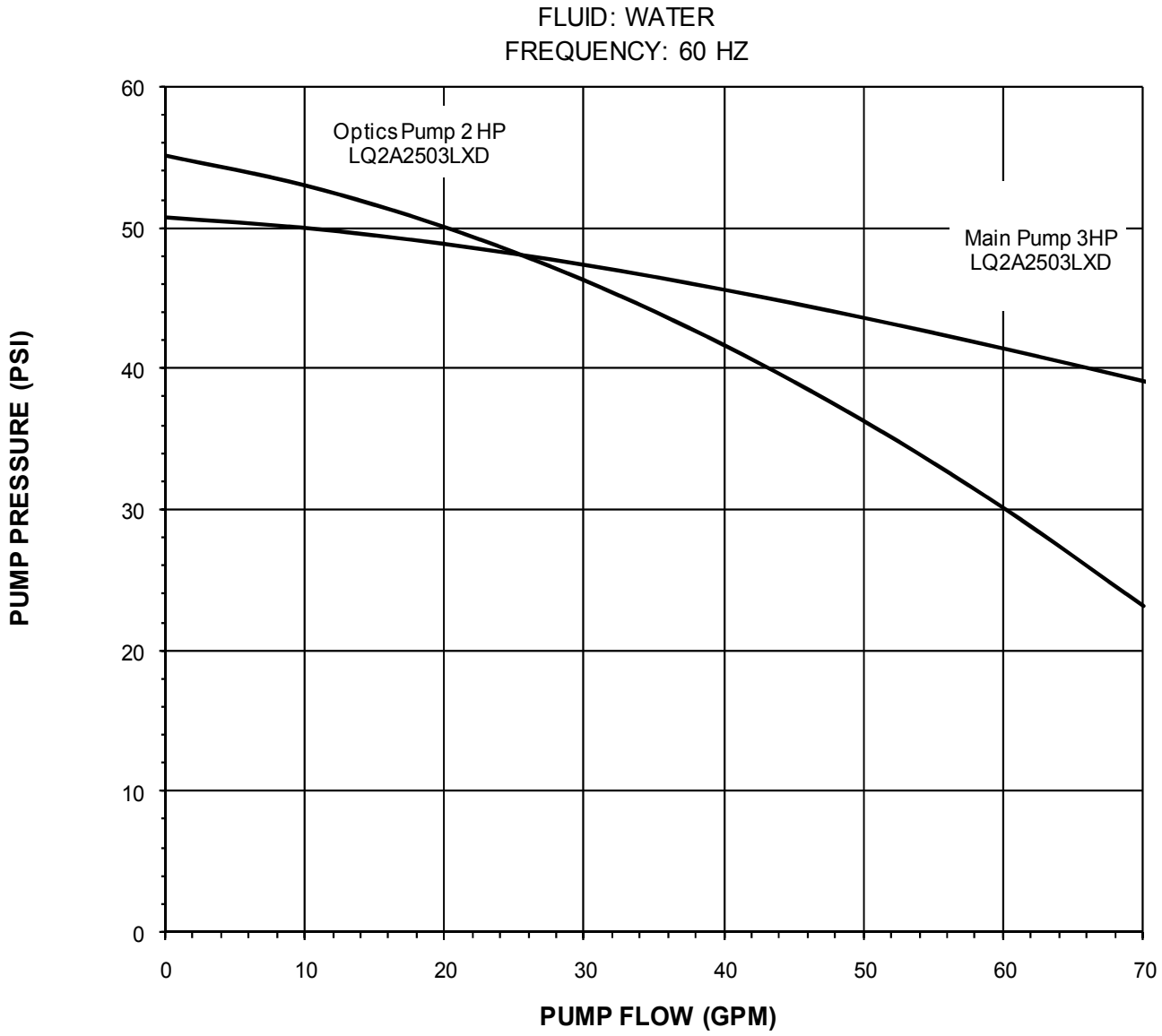

Figure 3 - LQ2A1003LXD Mechanical Schematic

ITEM	DESCRIPTION
WATER CIRCUIT	
1	EVAPORATOR
2	RESERVOIR
3	RESERVOIR SIGHT GLASS
4	PUMP, LASER
5	PUMP, OPTICS
6	SWITCH, LASER FLOW
7	SWITCH, OPTICS FLOW
8	STRAINER
9	VALVE, FLOW CONTROL
10	SWITCH, FREEZE THERMOSTAT
11	GAUGE, LASER PUMP PRESSURE
12	GAUGE, OPTICS PUMP PRESSURE
13	HEATER
14	CHECK VALVE
15	SOLENOID VALVE, LASER
16	SOLENOID VALVE, OPTICS COOLING VALVE
17	SENSOR, LASER RETURN TEMPERATURE
18	SENSOR, LASER SUPPLY TEMPERATURE
19	SENSOR, OPTICS RETURN TEMPERATURE
20	SENSOR, OPTICS SUPPLY TEMPERATURE

ITEM	DESCRIPTION
REFRIGERATION CIRCUIT	
1	EVAPORATOR
21	COMPRESSOR – 10T
22	HEATER, COMPRESSOR CRANKCASE
23	FILTER/DRIER
24	SIGHT GLASS
25	VALVE, THERMAL EXPANSION
26	VALVE, SCHRADER
27	VALVE, HOT GAS SOLENOID
28	SWITCH, LOW PRESSURE
29	SWITCH, HIGH PRESSURE
30	SWITCH, FAN CYCLE
31	VALVE, PRESSURE RELIEF
32	VALVE, BALL – SERVICE
33	VALVE, ACCESS – SERVICE
34	COIL, CONDENSER
35	FANS

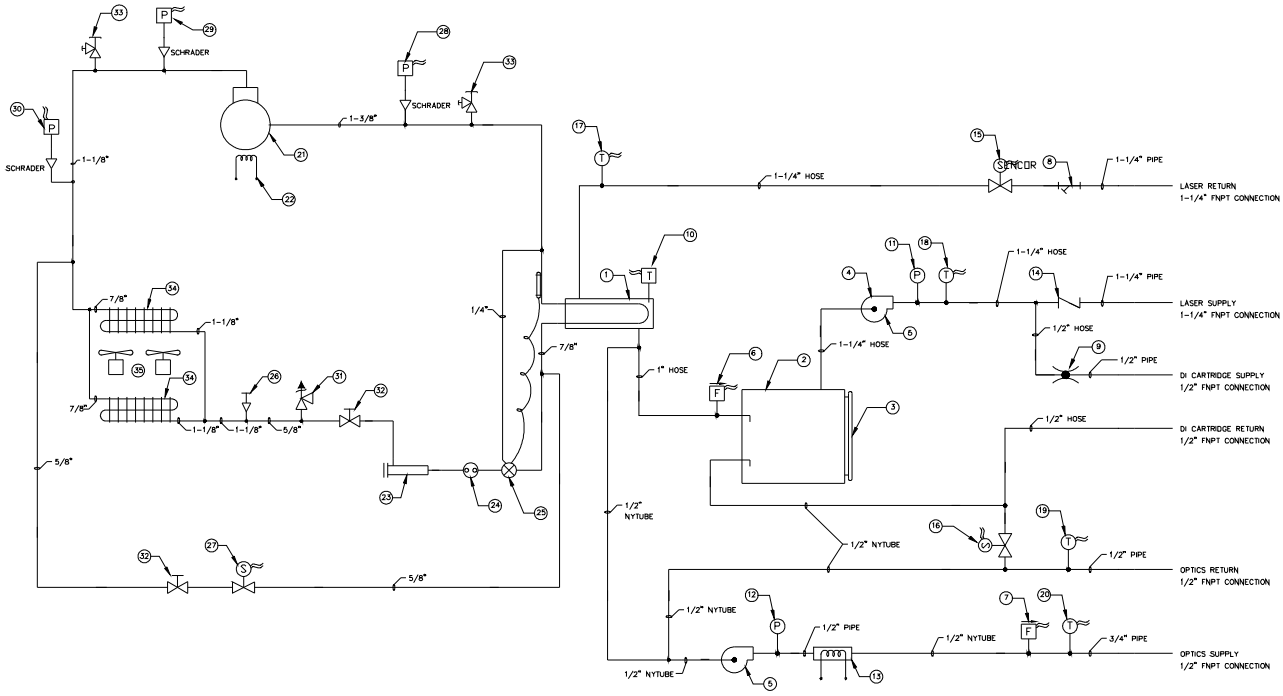

Figure 4 - LQ2A1503LXD Mechanical Schematic

ITEM	DESCRIPTION
WATER CIRCUIT	
1	EVAPORATOR
2	RESERVOIR
3	RESERVOIR SIGHT GLASS
4	PUMP, LASER
5	PUMP, OPTICS
6	SWITCH, LASER FLOW
7	SWITCH, OPTICS FLOW
8	STRAINER
9	VALVE, FLOW CONTROL
10	SWITCH, FREEZE THERMOSTAT
11	GAUGE, LASER PUMP PRESSURE
12	GAUGE, OPTICS PUMP PRESSURE
13	HEATER
14	CHECK VALVE
15	SOLENOID VALVE, LASER
16	SOLENOID VALVE, OPTICS COOLING VALVE
17	SENSOR, LASER RETURN TEMPERATURE
18	SENSOR, LASER SUPPLY TEMPERATURE
19	SENSOR, OPTICS RETURN TEMPERATURE
20	SENSOR, OPTICS SUPPLY TEMPERATURE

ITEM	DESCRIPTION
REFRIGERATION CIRCUIT	
1	EVAPORATOR
21	COMPRESSOR - 10T
22	HEATER, COMPRESSOR CRANKCASE
23	FILTER/DRIER
24	SIGHT GLASS
25	VALVE, THERMAL EXPANSION
26	VALVE, SCHRADER
27	VALVE, HOT GAS SOLENOID
28	SWITCH, LOW PRESSURE
29	SWITCH, HIGH PRESSURE
30	SWITCH, FAN CYCLE
31	VALVE, PRESSURE RELIEF
32	VALVE, BALL - SERVICE
33	VALVE, ACCESS - SERVICE
34	COIL, CONDENSER
35	FANS

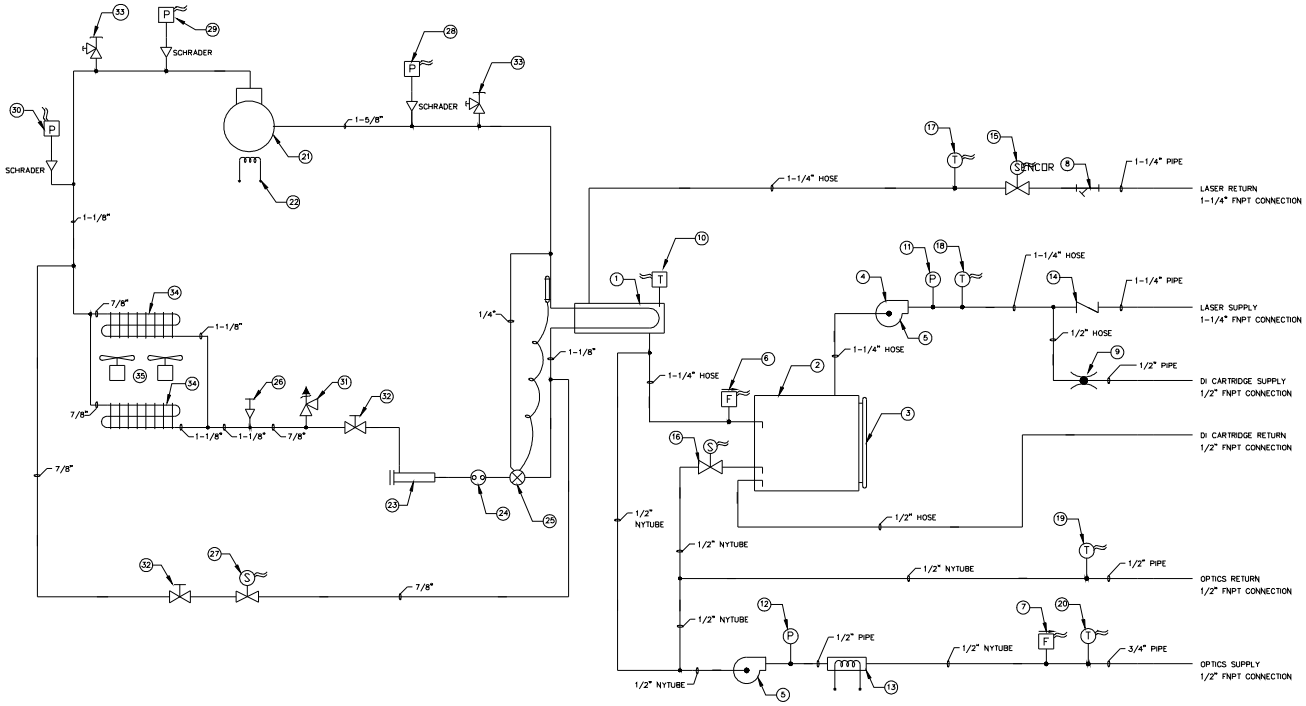

Figure 5 - LQ2A2003LXB Mechanical Schematic

ITEM	DESCRIPTION
WATER CIRCUIT	
1	EVAPORATOR
2	RESERVOIR
3	RESERVOIR SIGHT GLASS
4	PUMP, LASER
5	PUMP, OPTICS
6	SWITCH, LASER FLOW
7	SWITCH, OPTICS FLOW
8	STRAINER
9	VALVE, FLOW CONTROL
10	SWITCH, FREEZE THERMOSTAT
11	GAUGE, LASER PUMP PRESSURE
12	GAUGE, OPTICS PUMP PRESSURE
13	HEATER
14	CHECK VALVE
15	SOLENOID VALVE, LASER
16	SOLENOID VALVE, OPTICS COOLING VALVE
17	SENSOR, LASER RETURN TEMPERATURE
18	SENSOR, LASER SUPPLY TEMPERATURE
19	SENSOR, OPTICS RETURN TEMPERATURE
20	SENSOR, OPTICS SUPPLY TEMPERATURE

ITEM	DESCRIPTION
REFRIGERATION CIRCUIT	
1	EVAPORATOR
21	COMPRESSOR – 10T
22	COMPRESSOR – 10T
23	FILTER/DRIER
24	SIGHT GLASS
25	VALVE, THERMAL EXPANSION
26	VALVE, SCHRADER
27	VALVE, HOT GAS SOLENOID
28	SWITCH, LOW PRESSURE
29	SWITCH, HIGH PRESSURE
30	SWITCH, FAN CYCLE
31	VALVE, PRESSURE RELIEF
32	VALVE, BALL – SERVICE
33	VALVE, ACCESS – SERVICE
34	COIL, CONDENSER
35	FANS
36	HEATER, COMPRESSOR CRANKCASE

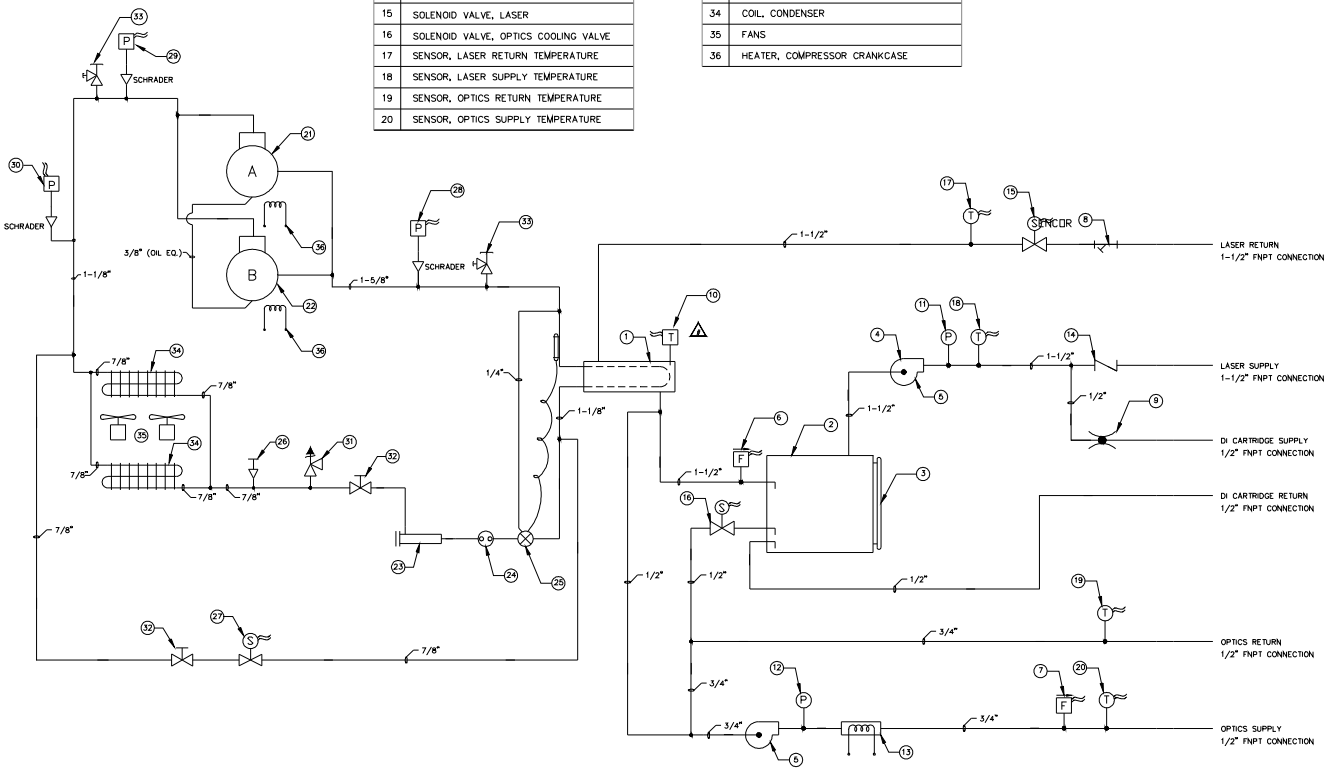

Figure 6 - LQ2A2503LXB Mechanical Schematic

ITEM	DESCRIPTION
REFRIGERATION CIRCUIT	
1	EVAPORATOR
21	COMPRESSOR - 10T
22	COMPRESSOR - 15T
23	FILTER/DRIER
24	SIGHT GLASS
25	VALVE, THERMAL EXPANSION
26	VALVE, SCHRADER
27	VALVE, HOT GAS SOLENOID
28	SWITCH, LOW PRESSURE
29	SWITCH, HIGH PRESSURE
30	SWITCH, FAN CYCLE
31	VALVE, PRESSURE RELIEF
32	VALVE, BALL - SERVICE
33	VALVE, ACCESS - SERVICE
34	COIL, CONDENSER
35	FANS
36	HEATER, COMPRESSOR CRANKCASE

ITEM	DESCRIPTION
WATER CIRCUIT	
1	EVAPORATOR
2	RESERVOIR
3	RESERVOIR SIGHT GLASS
4	PUMP, LASER
5	PUMP, OPTICS
6	SWITCH, LASER FLOW
7	SWITCH, OPTICS FLOW
8	STRAINER
9	VALVE, FLOW CONTROL
10	SWITCH, FREEZE THERMOSTAT
11	GAUGE, LASER PUMP PRESSURE
12	GAUGE, OPTICS PUMP PRESSURE
13	HEATER, OPTICS
14	CHECK VALVE, LASER SUPPLY (STANDARD)
15	CHECK VALVE, LASER RETURN (OPEN AT 5 PSID)
16	SOLENOID VALVE, OPTICS COOLING VALVE
17	SENSOR, LASER RETURN TEMPERATURE
18	SENSOR, LASER SUPPLY TEMPERATURE
19	SENSOR, OPTICS RETURN TEMPERATURE
20	SENSOR, OPTICS SUPPLY TEMPERATURE
37	SWITCH, TANK LEVEL

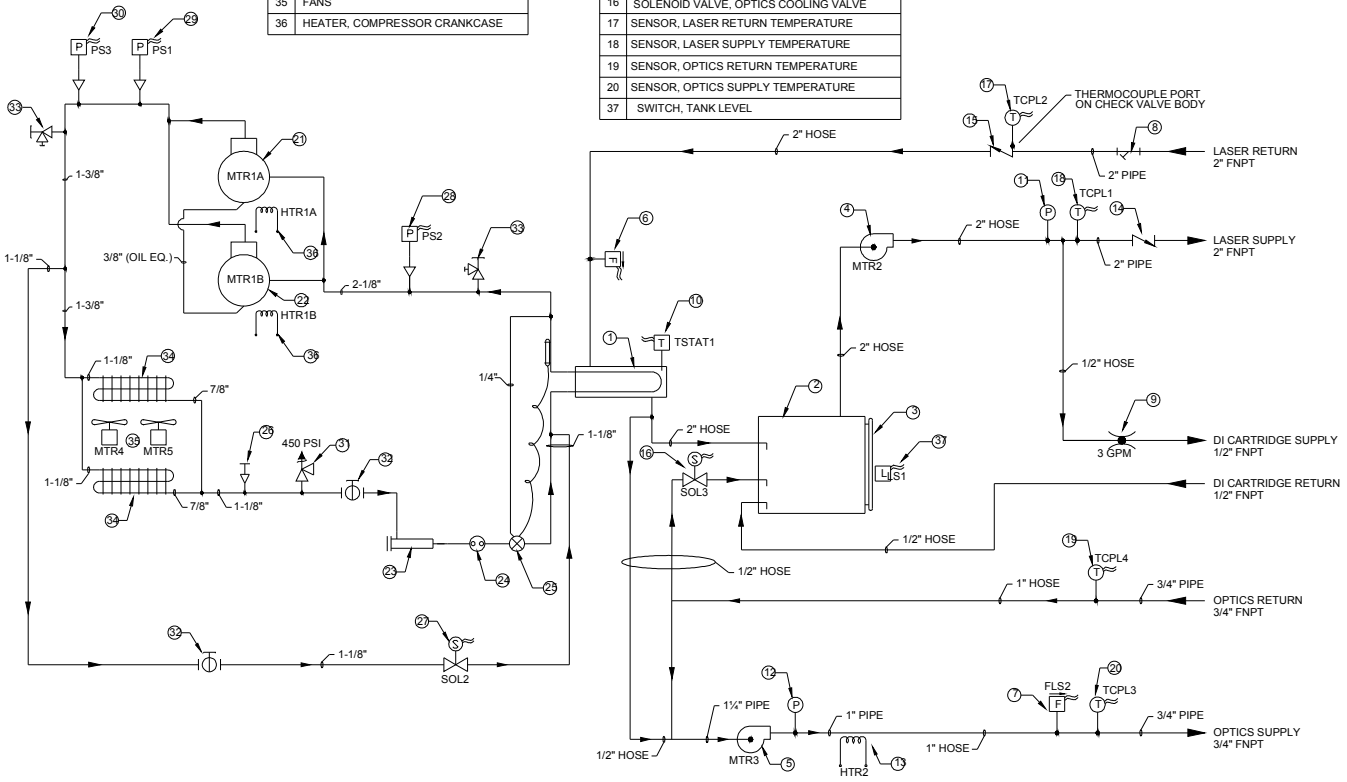

Figure 7 LQ2A1003LXD Electrical Schematic (Control Circuit)

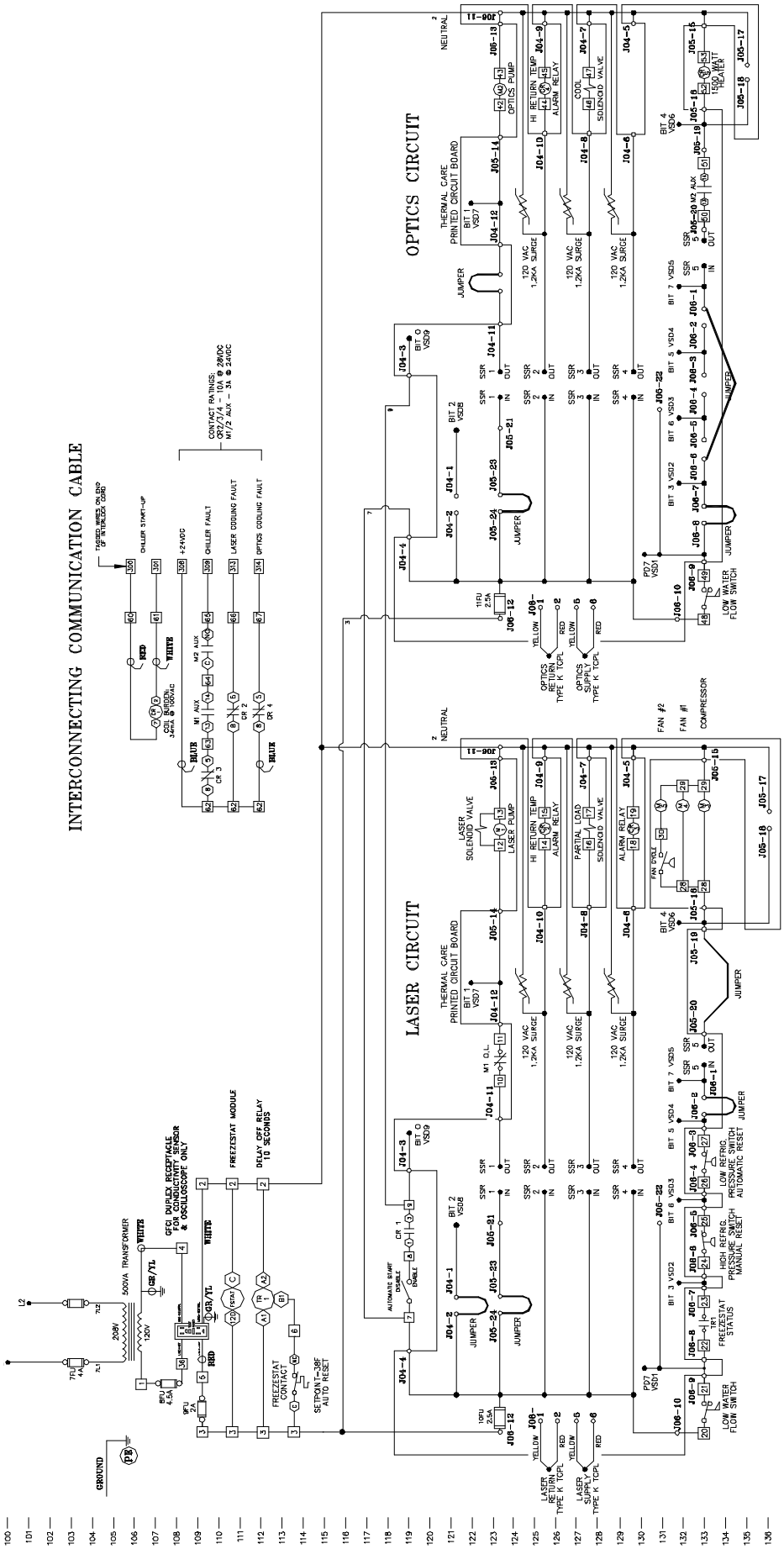

Figure 8 LQ2A1503LXB Electrical Schematic (Control Circuit)

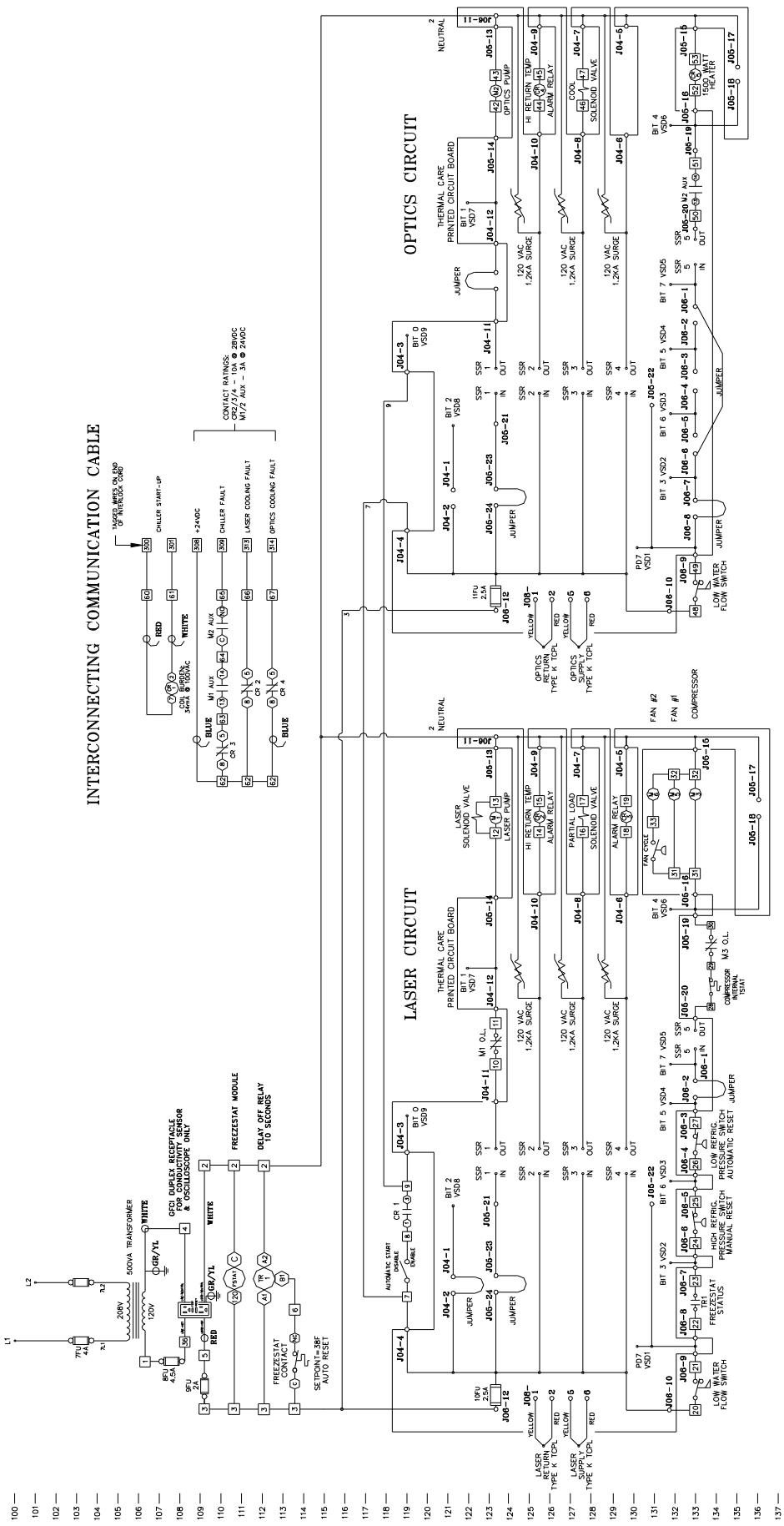

Figure 9 LQ2A2003LXD Electrical Schematic (Control Circuit)

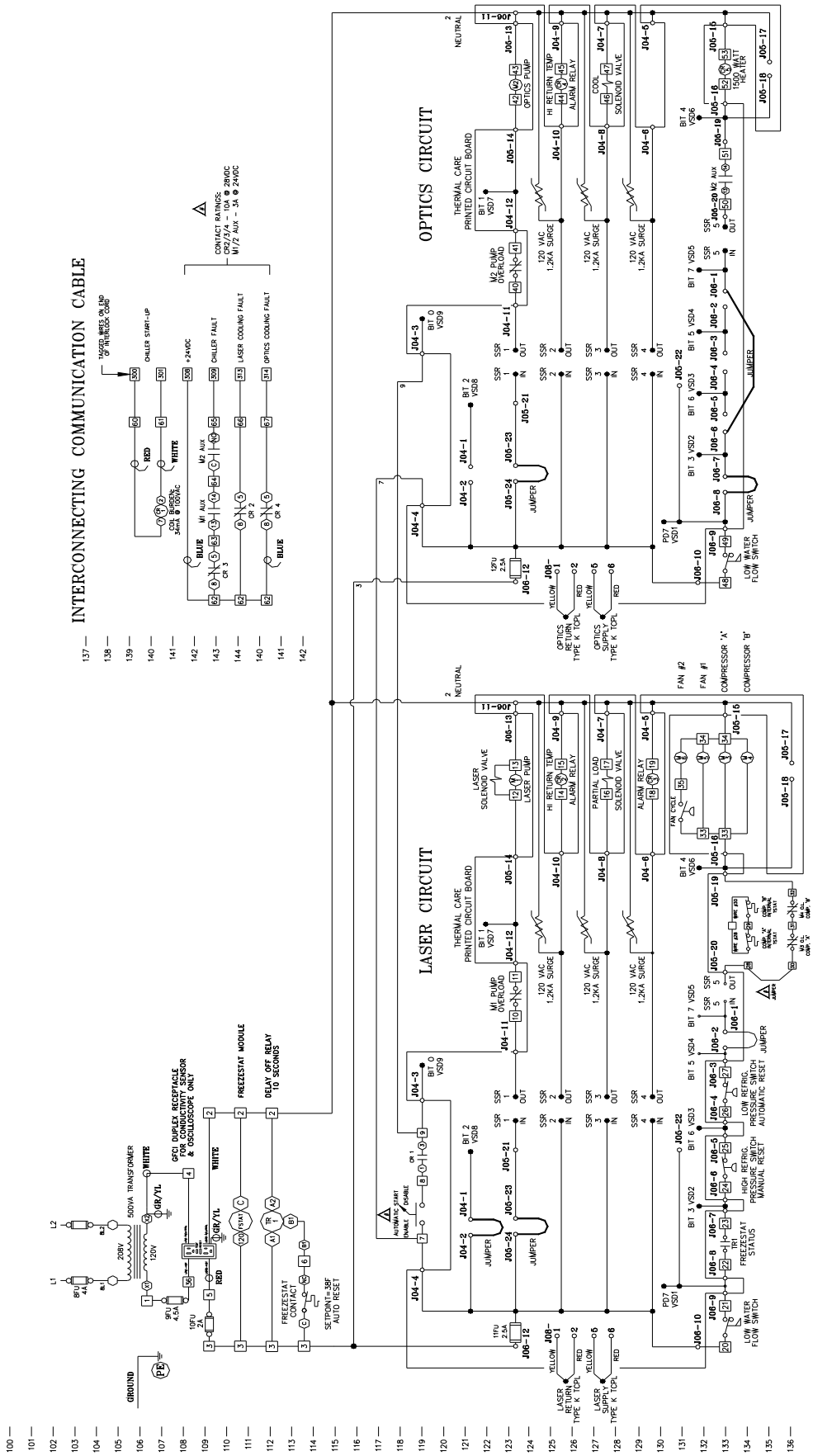

Figure 10 □ LQ2A2503LXB Electrical Schematic (Control Circuit)

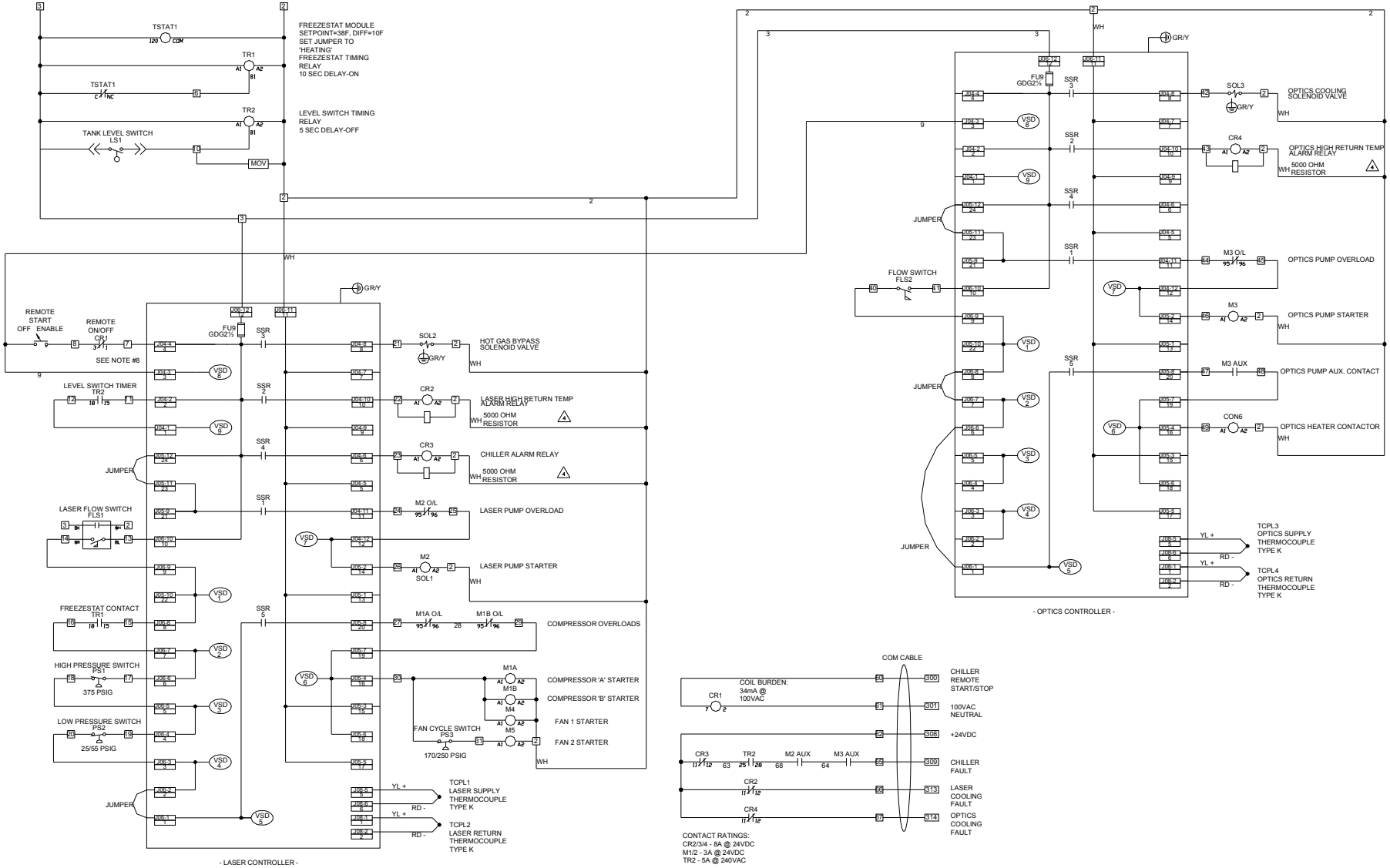

Figure 11 - LQ2A1003LXD Electrical Wiring Diagram (Power Circuit)

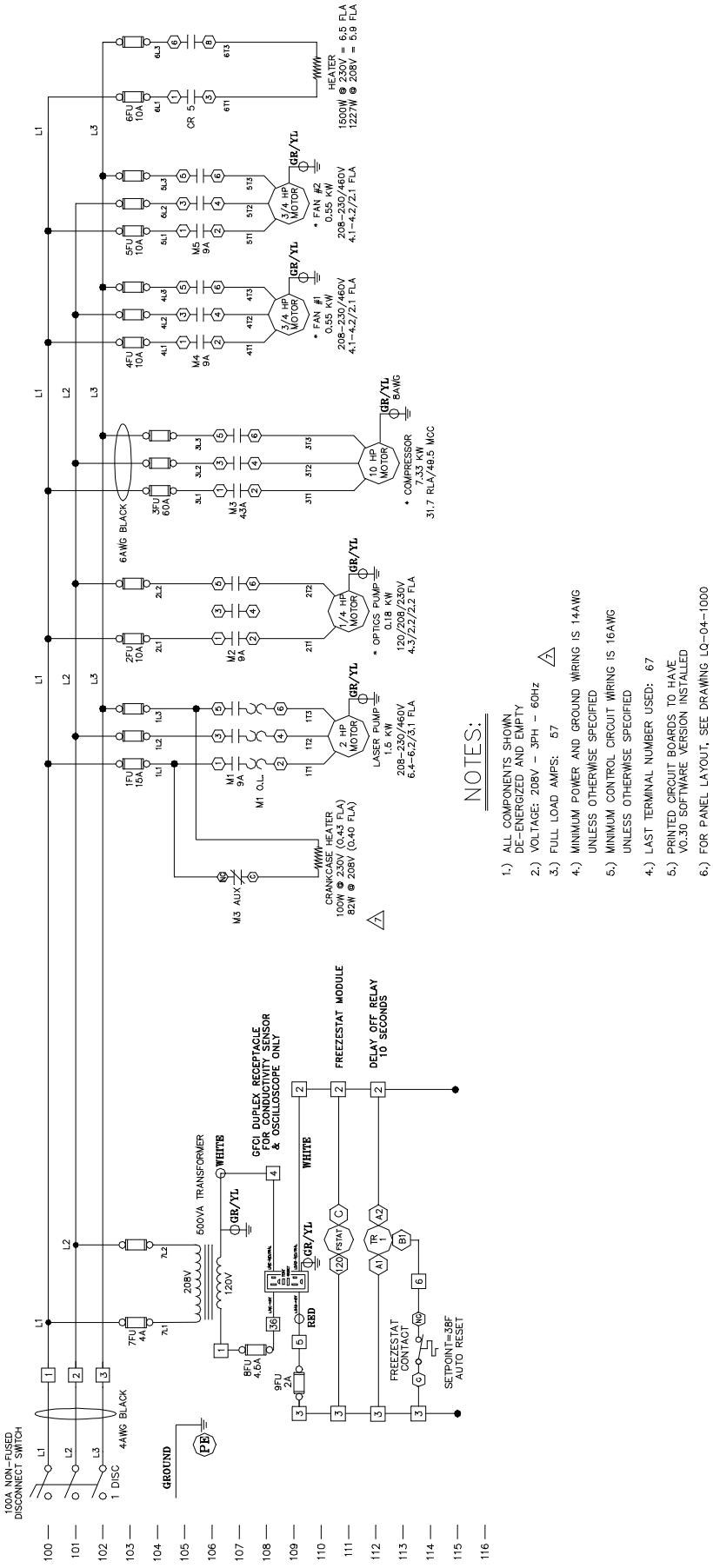

NOTES:

1.) ALL COMPONENTS SHOWN DE-ENERGIZED AND EMPTY
2.) VOLTAGE: 208V - 3PH - 60Hz
3.) FULL LOAD AMPS: 57
4.) MINIMUM POWER AND GROUND WIRING IS 14AWG UNLESS OTHERWISE SPECIFIED
5.) MINIMUM CONTROL CIRCUIT WIRING IS 16AWG UNLESS OTHERWISE SPECIFIED
4.) LAST TERMINAL NUMBER USED: 67
5.) PRINTED CIRCUIT BOARDS TO HAVE V0.30 SOFTWARE VERSION INSTALLED
6.) FOR PANEL LAYOUT, SEE DRAWING LQ-04-1000
7.) * MOTOR CONTAINS INTERNAL THERMAL PROTECTOR; AUTO RESET

Figure 12 - LQ2A1503LXB Electrical Wiring Diagram (Power Circuit)

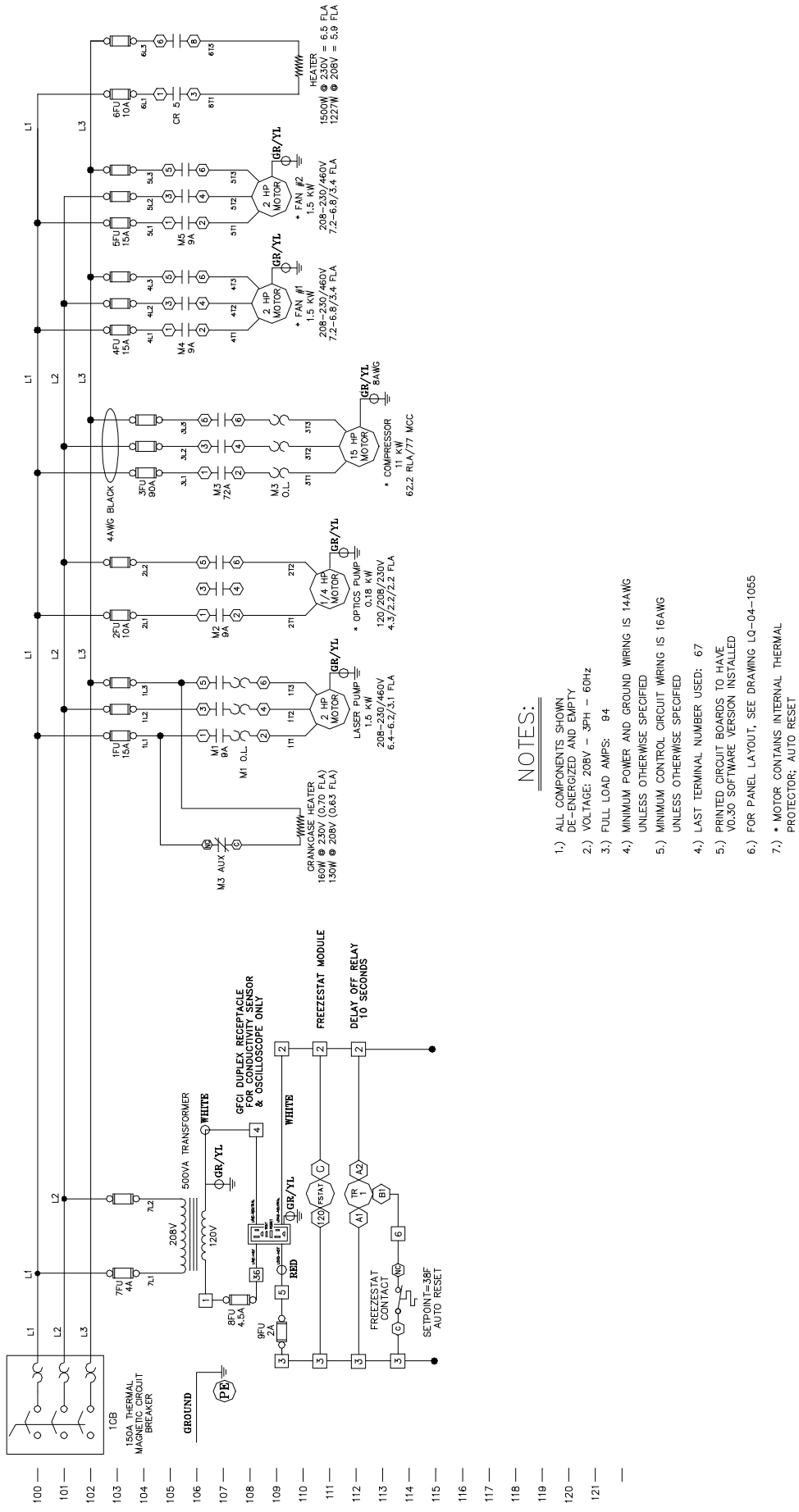

NOTES:

1.) ALL COMPONENTS SHOWN DE-ENERGIZED AND EMPTY
2.) VOLTAGE: 208V - 3PH - 60Hz
3.) FULL LOAD AMPS: 94
4.) MINIMUM POWER AND GROUND WIRING IS 14AWG UNLESS OTHERWISE SPECIFIED
5.) MINIMUM CONTROL CIRCUIT WIRING IS 16AWG UNLESS OTHERWISE SPECIFIED
4.) LAST TERMINAL NUMBER USED: 67
5.) PRINTED CIRCUIT BOARDS TO HAVE V0.30 SOFTWARE VERSION INSTALLED
6.) FOR PANEL LAYOUT, SEE DRAWING LQ-04-1055
7.) * MOTOR CONTAINS INTERNAL THERMAL PROTECTOR; AUTO RESET

Figure 13 LQ2A2003LXB Electrical Wiring Diagram (Power Circuit)

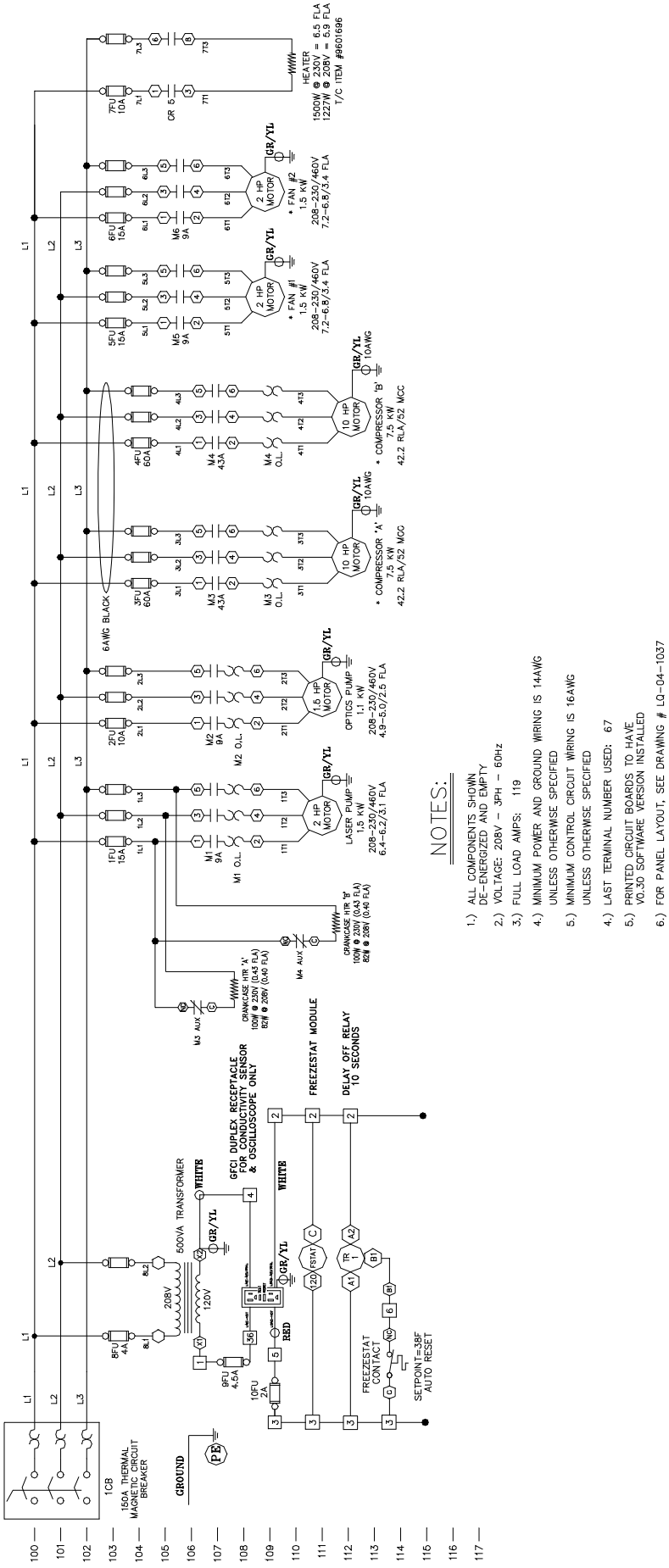

NOTES:

1.) ALL COMPONENTS SHOWN DE-ENERGIZED AND EMPTY
2.) VOLTAGE: 208V - 3PH - 60Hz
3.) FULL LOAD AMPS: 119
4.) MINIMUM POWER AND GROUND WIRING IS 14AWG UNLESS OTHERWISE SPECIFIED
5.) MINIMUM CONTROL CIRCUIT WIRING IS 16AWG UNLESS OTHERWISE SPECIFIED
4.) LAST TERMINAL NUMBER USED: 67
5.) PRINTED CIRCUIT BOARDS TO HAVE V0.30 SOFTWARE VERSION INSTALLED
6.) FOR PANEL LAYOUT, SEE DRAWING # LQ-04-1037
7.) * MOTOR CONTAINS INTERNAL THERMAL PROTECTOR; AUTO RESET

Figure 14 LQ2A2503LXB Electrical Wiring Diagram (Power Circuit)

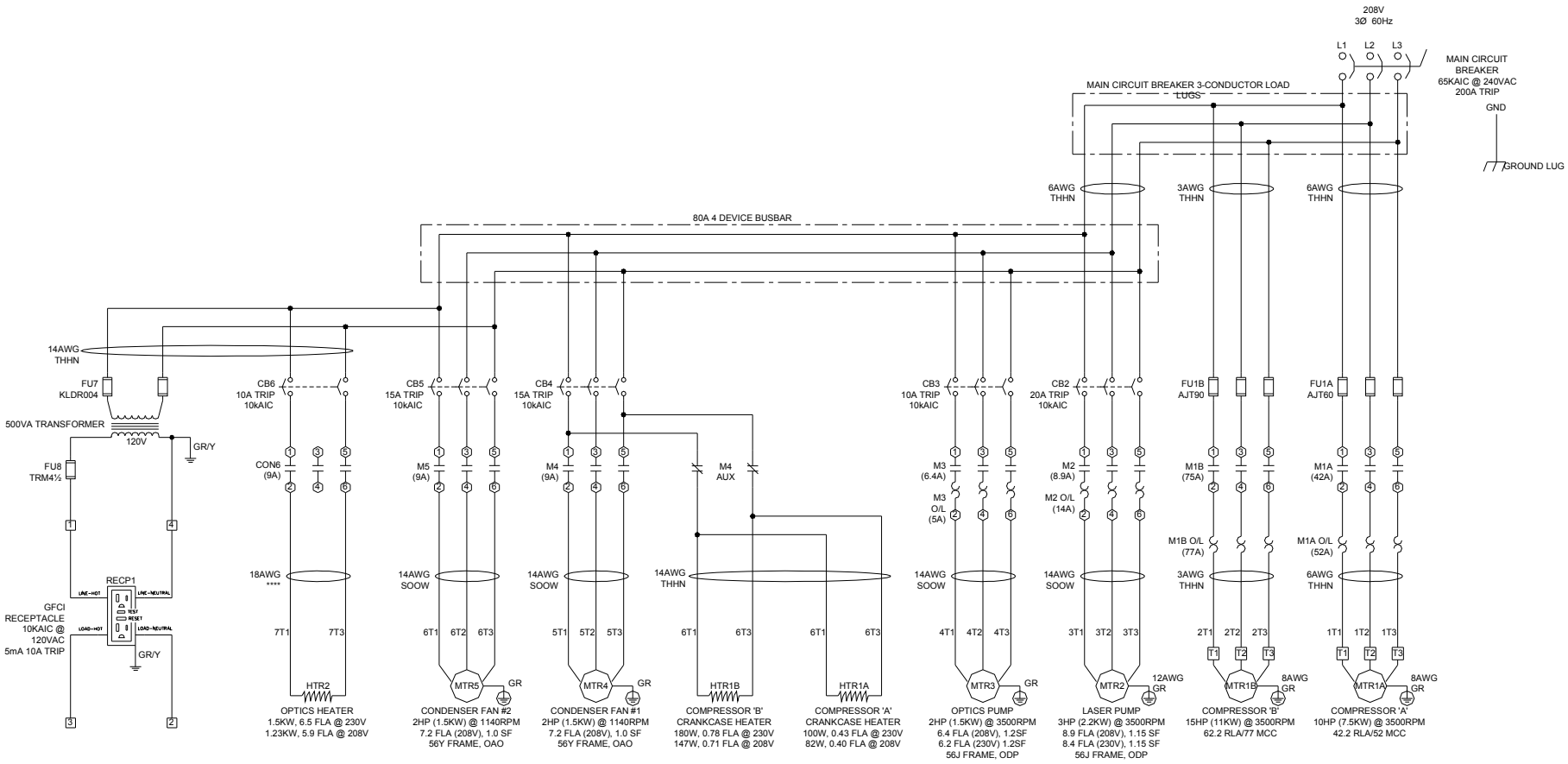

Figure 15 LQ2A1003LXD Dimensions

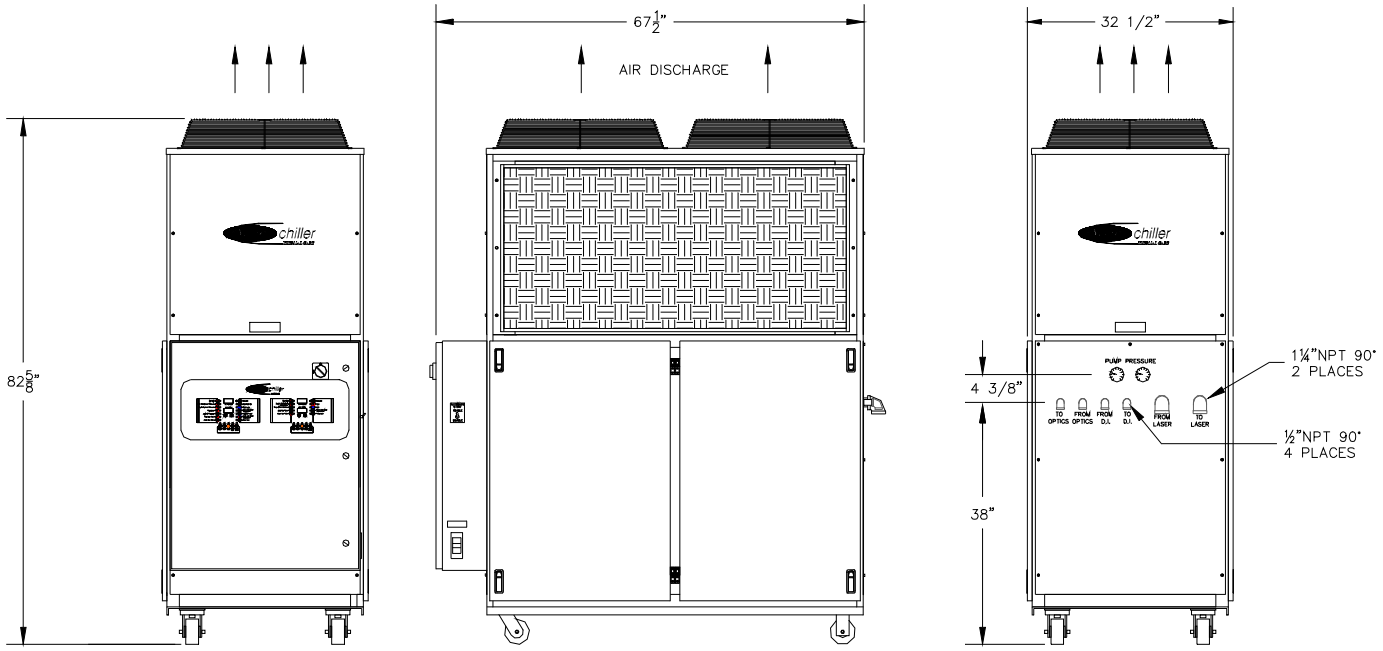

Figure 16 LQ2A1503LXB, LQ2A2003LXD, LQ2A2503LXD Dimensions

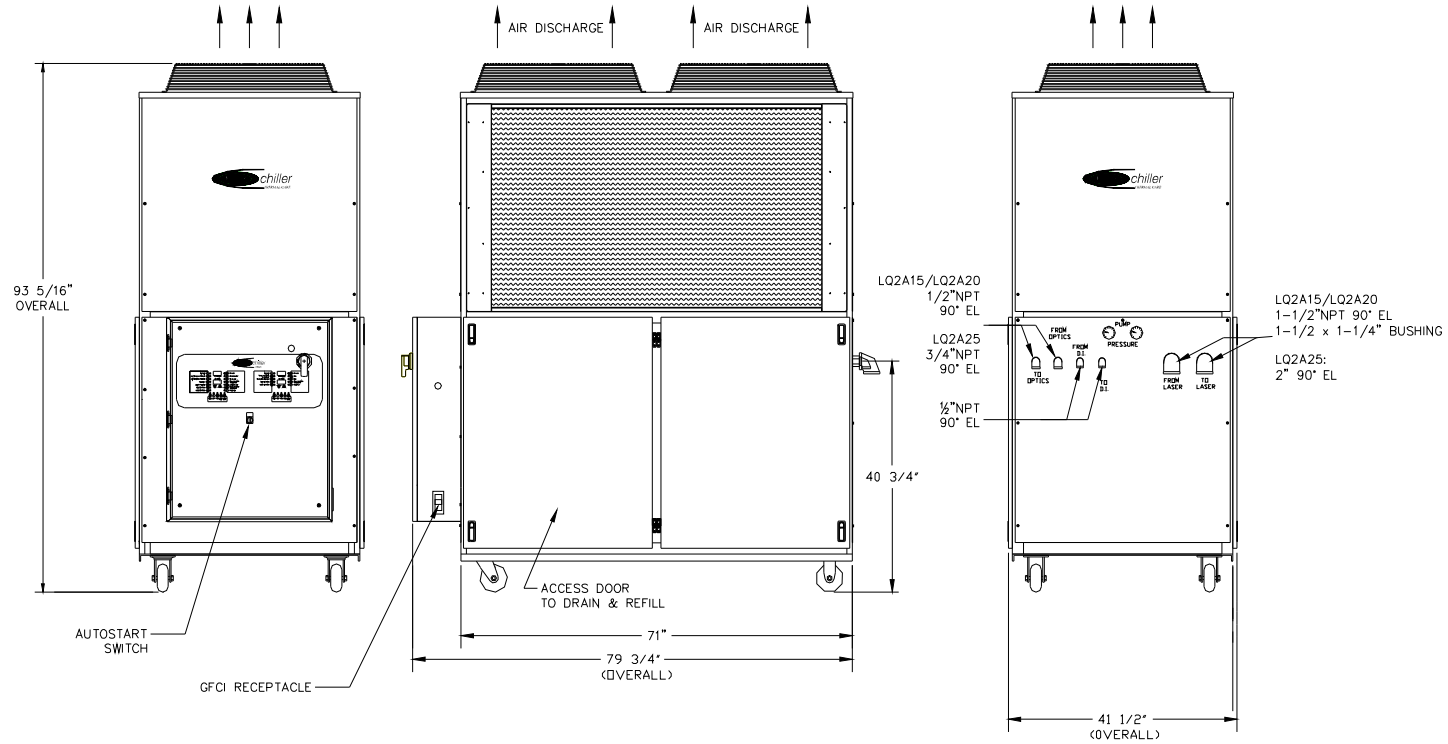

Warranty

Thermal Care warrants its equipment to be free from defects in material and workmanship when used under recommended operating conditions.

Thermal Care's obligation is limited to repair (i.e. rewind a motor) or replacement (not adjustment or maintenance), F.O.B. the factory of any parts supplied by Thermal Care within a period of 24 months for parts and labor from the date of shipment to the original purchaser. Labor warranty is for continental U.S.A., Canada, and Puerto Rico only.

This warranty does not cover the cost of labor during overtime hours (after normal working hours or during weekends and holidays). Any cost differential for overtime labor will be the responsibility of the customer. Thermal Care is not responsible for any sales, use, excise or other applicable taxes associated with the replacement of parts under this warranty. This warranty will be voided when, in Thermal Care's opinion, the equipment and/or system has been subject to misuse, negligence or operation in excess of recommended limits, including freezing, or has been altered, and/or repaired without express factory authorization. If equipment is installed in hostile environments, unless such conditions were specified at the time of purchase; or the serial number has been removed or defaced this warranty shall not apply. This warranty is not transferrable.

Under no circumstances shall Thermal Care be liable for loss of prospective or speculative profits, or special, indirect, incidental or consequential damages.

All warranty service must be authorized by Thermal Care prior to work being performed and have a Thermal Care purchase order issued. All defective parts become the property of Thermal Care and must be returned as advised by Thermal Care.

Thermal Care neither assumes, nor authorizes any person to assume for it, any liability not expressed in this warranty. There is an implied warranty of merchantability and of fitness for particular purpose; all other implied warranties, and any liability not based upon contract are hereby disclaimed and excluded by this warranty. This warranty is part of the standard conditions and terms of sale of Thermal Care.