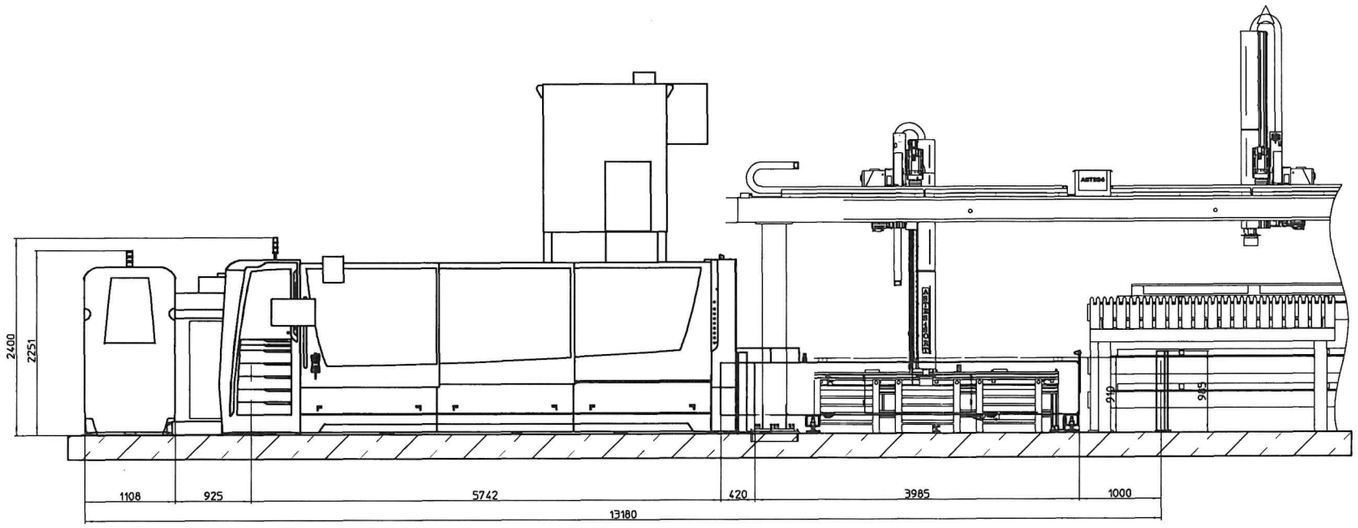
2400
2251
1108
925
5742
420
3985
1000
13180
210
915

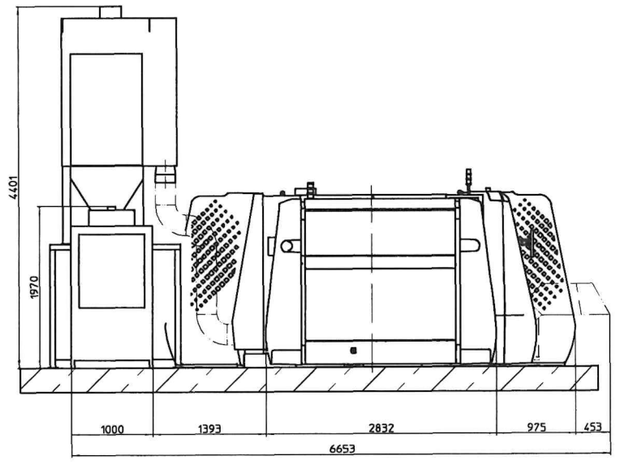
4401
1970
1000
1393
2832
975
453
6653

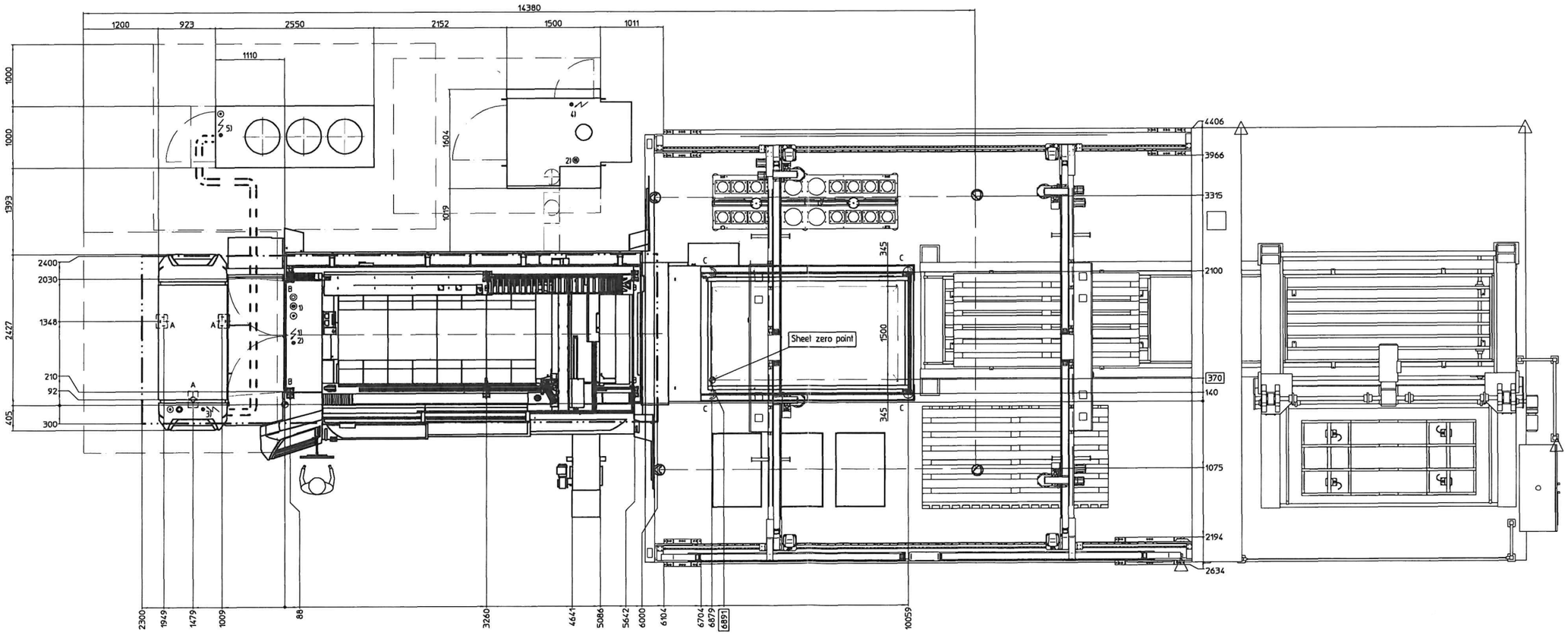
14380
1200
923
2550
2152
1500
1011
1110
1000
1000
1993
2400
2030
1348
2477
210
92
405
300
1604
1019
345
1500
345
Sheet zero point
4406
3966
3315
2100
370
140
1075
2194
2634
2300
1949
1479
1009
88
3260
4641
5086
5642
6000
6104
6704
6879
6891
10059

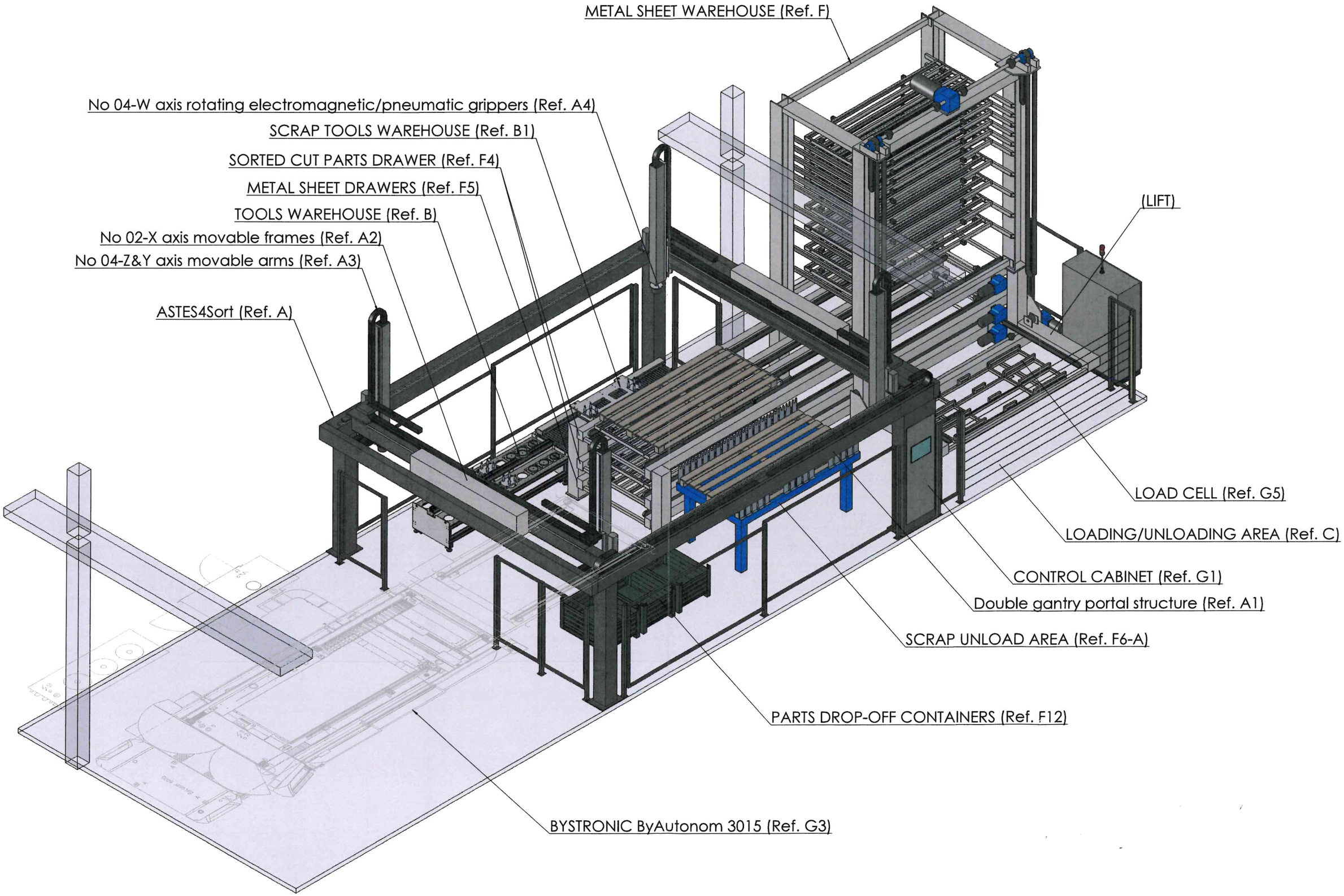

ATTACHMENT 4 VNL OF-014/14

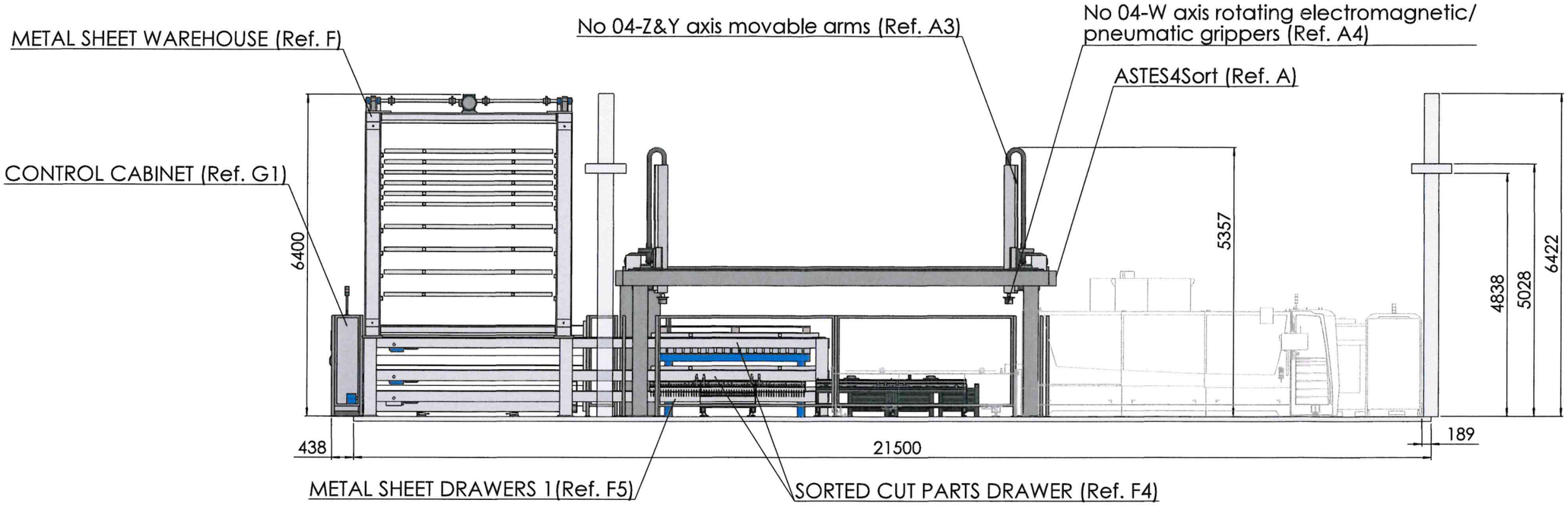

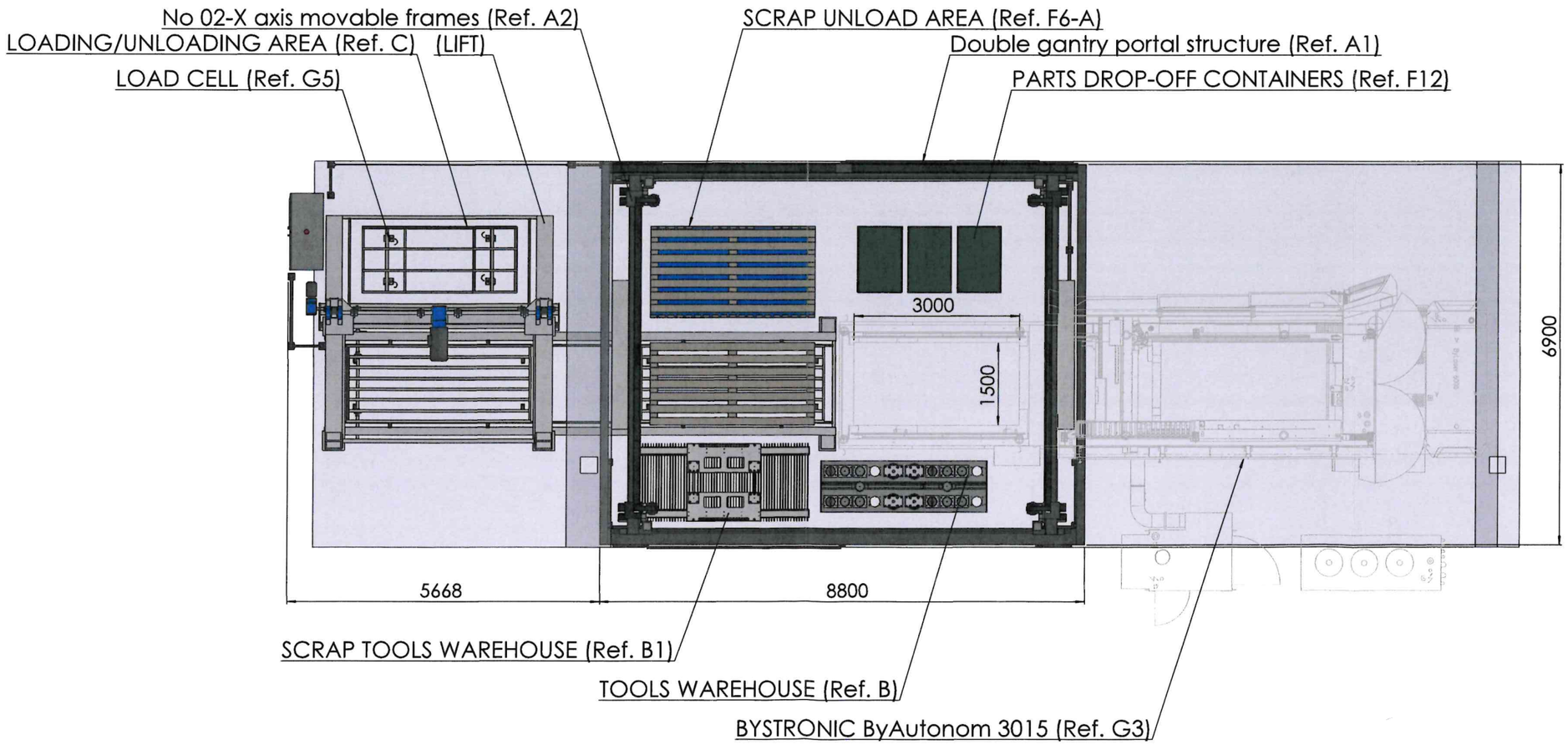

ATTACHMENT 3 VNL OF-014/14