PIECE MARK	NO. REQ'D	MATERIAL	DESCRIPTION/REMARKS	TOTAL WEIGHT

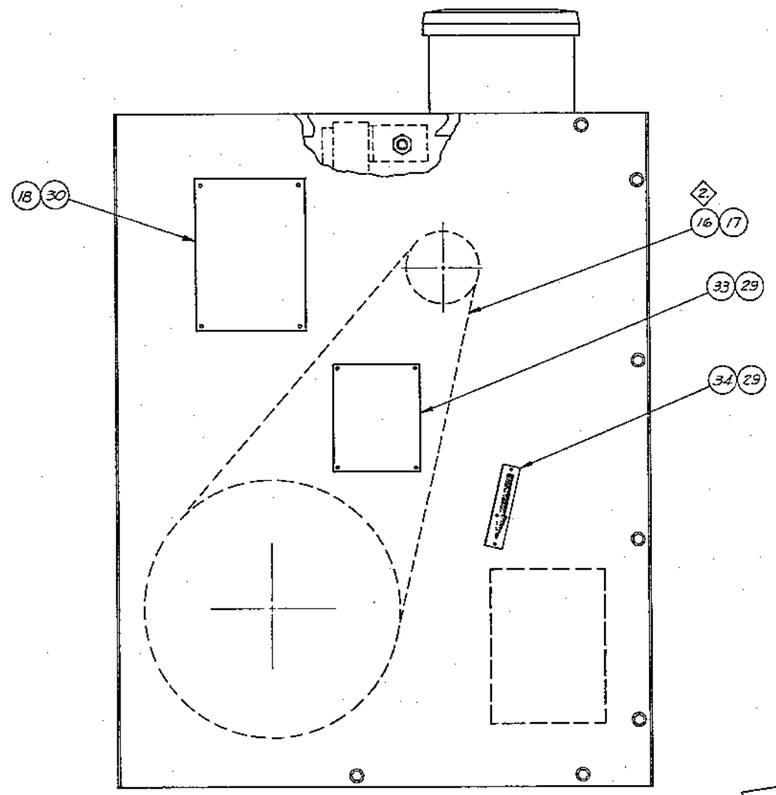

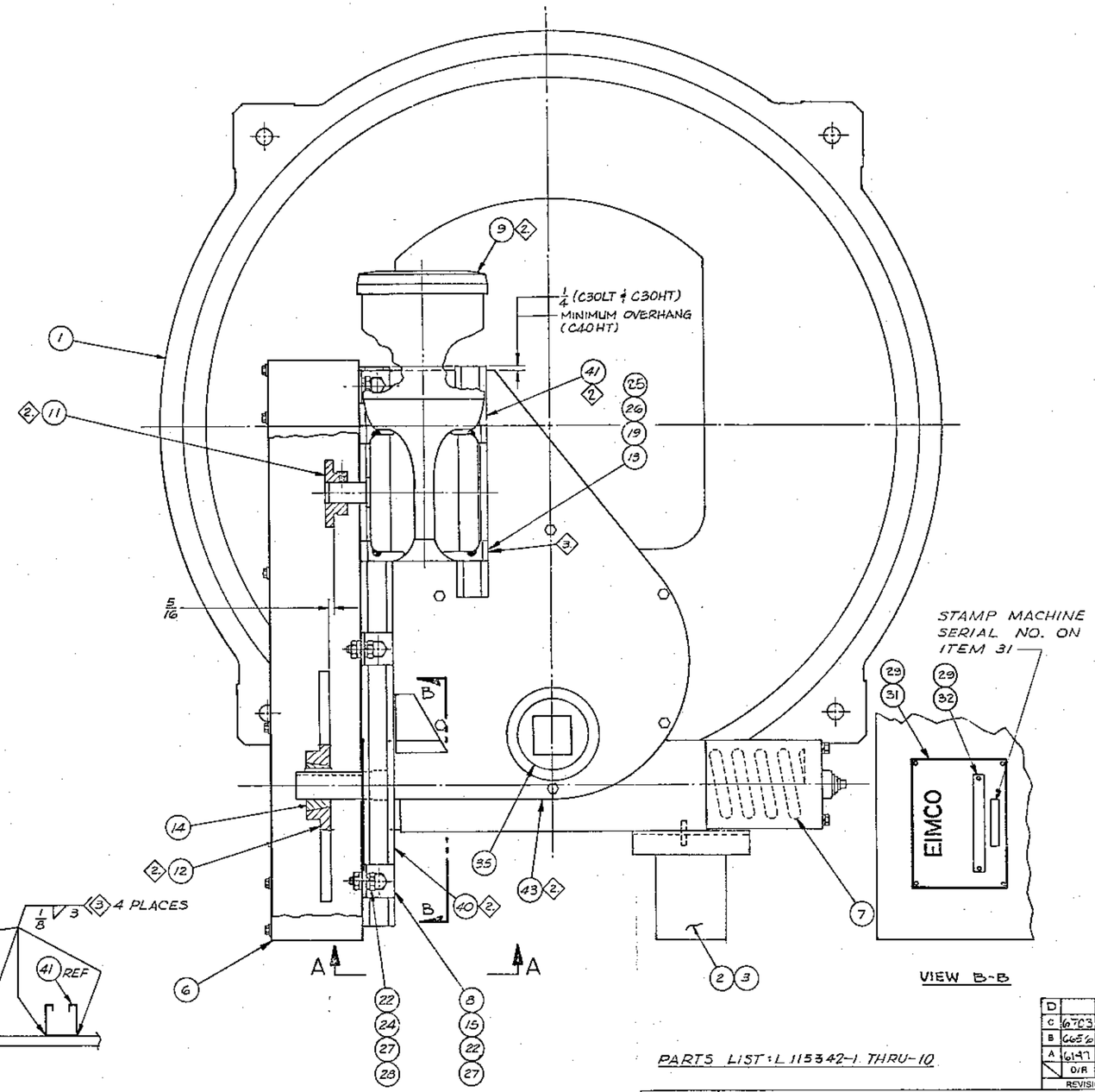

VIEW B-B

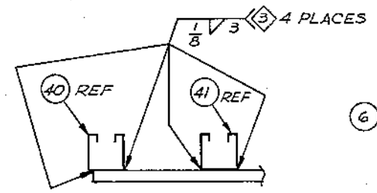

VIEW A-A

NOTES:

1. BASIC DRIVE CONFIGURATION AS SHOWN FOR ILLUSTRATION ONLY.
2. BOLT GEAR MOTOR (9), TO MOUNTING CHANNELS, (40) AND (41), POSITION ON COVER (43). INSTALL SPROCKETS (11), (12), AND CHAIN (18). ALIGN AS SHOWN AND WELD MOUNTING CHANNELS TO COVER PER VIEW A-A AND PLAN VIEW.
3. THREE INCH LONG WELDS, CENTERED AT A POINT WHERE REDUCER FEET BOLT TO MOUNTING CHANNEL.
4. SEE DRAWING 203520 FOR CHAIN GUARD ASSEMBLY.

PARTS LIST: L 115342-1 THRU-10

D			
C	6703	10-5-90	
B	6656	3-8-90	
A	6197	5-16-85	
	O/R	DATE	

REVISION

ENVIROTECH

EIMCO PMD – ENVIROTECH CORPORATION – Salt Lake City, Utah

This drawing and all information thereon is the property of Eimco PMD and is confidential and must not be made public or copied. This drawing is loaned subject to return upon demand and is not to be used directly or indirectly in any way detrimental to our interests.

HOLD FRACTIONAL MACHINED DIMENSIONS TO ± 1/64"

DO NOT SCALE PRINTS	
DATE	1-3-84
DRAWN	LBS
CHECK'D	JKM
APPR.	GEN

DRIVE UNIT PACKAGE
CLARIFIERS & CLARITHICKENERS
W/C30LT, C30HT, C40LT
OR C40HT DRIVES

DWG. NO. 115342 REV C

REVISION	BY	CHECK'D	DATE

E-2653 Rev 6 77