Instruction Manual

Winder Operation Manual

For

Fraser Paper Ltd.

Madawaska, ME

Beloit Lenox SF Winder No. 8499

BELOIT CORPORATION

A Harnischfeger Industries Company

Lenox Division, Crystal St. Lenox MA 01240 U.S.A.

PREFACE

This manual provides instructions for the operation and maintenance of the BELOIT Lenox SF Series Winder. The information contained in this manual may be used in conjunction with other information provided to the user by Beloit Lenox for installation and operation of the winder.

Safety precautions have been cited extensively throughout this manual in an effort to ensure that the use of BELOIT Lenox equipment will be safe and accident free. The following sections are devoted entirely to safety: "General Safety", "Operator Safety", "Slitter Safety", Shaftless Winding Safety", "Maintenance Safety", "Danger, Warning, Caution, and Notice as Used in This Document", and "Lockout/Tagout Procedures". These sections provide a direct reference to safety information for operating and maintenance personnel, but they are also designed to provide a source of winder safety training information for incorporation into your own mill safety training programs. We urge you to use this information for that purpose.

BELOIT Lenox Division, BELOIT Corp. disclaims the implied warranties of merchantability and fitness for a particular purpose and makes no express warranties except as may be stated in its written agreement with and for its customer. In no event is BELOIT Lenox Division or BELOIT Corporation liable to anyone for any indirect, special, or consequential damages. Any modifications to equipment or operational changes that follow the preparation of this manual will supersede the information herein. Consult BELOIT Lenox Division for product or service availability.

Copyright © BELOIT Corp., 1994

SAFETY MESSAGES

⚠ DANGER

DANGER symbols, as illustrated above, are used in this document to emphasize imminently hazardous conditions or actions that *will*, if not avoided, cause death or serious injury.

⚠ WARNING

WARNING symbols, as illustrated above, are used in this document to indicate *potentially* hazardous conditions or actions that *can*, if not avoided, cause serious injury or death.

⚠ CAUTION

CAUTION symbols, as illustrated above, are used in this document to indicate *potentially* hazardous conditions or actions that can, if not avoided, cause moderate personal injury.

– NOTICE –

NOTICE symbols, when centered and formatted as illustrated above, are used in this document to call attention to technical information, which if not heeded, can result in damage to equipment or creation of potentially hazardous conditions.

TABLE OF CONTENTS

SECTION 1. OVERVIEW AND GENERAL SAFETY

Systems Overview . . . . . 1 - 2
General Safety . . . . . 1 - 4
Danger, Warning, Caution, and Notice as Used in This Document . . . . . 1 - 5

SECTION 2. WINDER OPERATION

Operator Safety . . . . . 2 - 2
Slitter & Shaftless Winding Safety Notes . . . . . 2 - 3

Using This Section . . . . . 2 - 4
Presentation of Topics in This Section . . . . . 2 - 4

Control Panels . . . . . 2 - 5
Benchboard Controls . . . . . 2 - 5
Unwind Panel 500 . . . . . 2 - 8
Unwind Panel 560 . . . . . 2 - 10
Slitter Panels 615 & 650 . . . . . 2 - 11
Winder Frame Panel 700 . . . . . 2 - 12
Winder Frame Panel 760 . . . . . 2 - 16

Loading/Unloading Parent Rolls On The Unwind . . . . . 2 - 17

Threading The Winder . . . . . 2 - 18

Starting The Winder . . . . . 2 - 22
Starting After Thread-Up . . . . . 2 - 22
Starting After a Set Change . . . . . 2 - 23

Running The Winder . . . . . 2 - 24
Modes of Winder Operation . . . . . 2 - 24
Bel-OIT Mode . . . . . 2 - 24
Lars Mode . . . . . 2 - 24
Selecting a Mode of Operation . . . . . 2 - 25
Biasing Curves . . . . . 2 - 25
Bel-OIT Mode Operation . . . . . 2 - 26
Bel-OIT Mode Functions . . . . . 2 - 26
Running In Bel-OIT Mode . . . . . 2 - 28
LARS Mode Operation . . . . . 2 - 29
Running In LARS Mode . . . . . 2 - 29

TABLE OF CONTENTS

Section 2. Winder Operation (continued)

Using the Panel View . . . . . 2 - 30
The Panel View Keypad . . . . . 2 - 30
Editing Values With the Keypad . . . . . 2 - 31
The Panel View Main Menu . . . . . 2 - 32
Machine Setup Screen . . . . . 2 - 33
Winder Control Screen . . . . . 2 - 34
Roll Structure Bias Screen . . . . . 2 - 36
Roll Structure Setup Screen . . . . . 2 - 38
Winder Drive Setup Screen . . . . . 2 - 40
Winder Running Screen . . . . . 2 - 42
Calibration Screen . . . . . 2 - 45
Hydraulic System Screen . . . . . 2 - 46
Tension Feedback Screen . . . . . 2 - 47
Articulating Rider Roll Control Screen . . . . . 2 - 48
Trim Blower Biasing Screen . . . . . 2 - 49

Stopping The Winder . . . . . 2 - 50

Removing Rolls: Set Changing . . . . . 2 - 51
Manual Set Change Sequence of Operations . . . . . 2 - 51
Set Changing With Auto-Eject . . . . . 2 - 53

Web Splicing . . . . . 2 - 55
Splicing at the Unwind . . . . . 2 - 55
Splicing at the Winder: Basic Method . . . . . 2 - 57
Splicing at the Winder With Large Rolls in the Pocket . . . . . 2 - 59
Preparing the Drums With Teflon Tape . . . . . 2 - 63

Interlocks . . . . . 2 - 65

Winder Troubleshooting Guide . . . . . 2 - 66

SECTION 3. COMPONENT INFORMATION

Reel Spool Unwind . . . . . 3 - 2
Reel Spool Components & Functions . . . . . 3 - 2
Unwind Maintenance . . . . . 3 - 3
Unwind Interlocks . . . . . 3 - 4
Unwind Control Settings . . . . . 3 - 4
Reference Drawings & Schematics . . . . . 3 - 4

TABLE OF CONTENTS

Section 3. Component Information (continued)

Lead-In Roll & Before Slitter Spreader . . . . . 3 - 5
Lead-In Roll . . . . . 3 - 5
Before Slitter Spreader . . . . . 3 - 5
Reference Drawings & Schematics . . . . . 3 - 5

Lead-In Sheet Threader & Holder . . . . . 3 - 6
Lead-In Threader . . . . . 3 - 6
Lead-In Threader Operation . . . . . 3 - 6
Lead-In Holder . . . . . 3 - 7
Lead-In Holder Operation . . . . . 3 - 7
Reference Drawings & Schematics . . . . . 3 - 7

Slitter Section . . . . . 3 - 8
Slitter Section Components . . . . . 3 - 8
Slitter Section Rolls . . . . . 3 - 8
Quickset Slitters . . . . . 3 - 11
General Slitter Section Information . . . . . 3 - 12
The Cut Point . . . . . 3 - 13
Control Settings Chart . . . . . 3 - 13
Operating The Slitters . . . . . 3 - 14
Changing The Slitter Blades . . . . . 3 - 14
Quickset Relocation Of Slitters . . . . . 3 - 15
Slitter Section Maintenance . . . . . 3 - 16
Reference Drawings & Schematics . . . . . 3 - 16
Slitter Troubleshooting Chart . . . . . 3 - 17

Dual Roll Spreader . . . . . 3 - 20
Operating the Dual Roll Spreader . . . . . 3 - 20
Setting Up the Spreader . . . . . 3 - 20

Coreslides And Core Chucks . . . . . 3 - 22
Core Slide/Core Chuck Components . . . . . 3 - 22
Pivoting Core Chuck Function . . . . . 3 - 22
Operating the Coreslides & Core Chucks . . . . . 3 - 23
Hydraulic Circuit . . . . . 3 - 23
Coreslides Controls Settings Chart . . . . . 3 - 24
Reference Drawings & Schematics . . . . . 3 - 24
Coreslides Troubleshooting Chart . . . . . 3 - 25

TABLE OF CONTENTS

Section 3. Component Information (continued)

Drum Sheet Threader & Holder . . . . . 3 - 26
Components . . . . . 3 - 26
Operation . . . . . 3 - 27
Maintenance . . . . . 3 - 27
Reference Drawings and Schematics . . . . . 3 - 27
Controls Setting Chart . . . . . 3 - 28
Sheet Threader/Holder Troubleshooting Chart . . . . . 3 - 28

Articulating Rider Roll . . . . . 3 - 29
Rider Roll Components . . . . . 3 - 29
Rider Roll Operation . . . . . 3 - 31
Initialization . . . . . 3 - 31
Auto-Initialization . . . . . 3 - 32
Raising & Lowering the Wheels Manually . . . . . 3 - 34
Wheel Gap: Verifying Mid-Stroke Position . . . . . 3 - 34
Operating in Articulating or Non-Articulating Mode . . . . . 3 - 35
Rider Roll Troubleshooting Chart . . . . . 3 - 37
Rider Roll Maintenance Schedule . . . . . 3 - 41
Rider Roll Pneumatic/Hydraulic Circuit Setup . . . . . 3 - 42
Controls Setting Chart . . . . . 3 - 44
Rider Roll Glycol Filling and Bleeding Procedure . . . . . 3 - 45
Rear Fluid Cylinder Replacement . . . . . 3 - 48
Rider Roll Linkage Adjustment Instructions . . . . . 3 - 49
Segment Removal/Installation . . . . . 3 - 51
Rider Roll Calibration . . . . . 3 - 53
Rider Roll Control Loop Chart . . . . . 3 - 53

Differential Torque Control System . . . . . 3 - 54
Torque Control Operation And Adjustment . . . . . 3 - 54
Monitoring The System . . . . . 3 - 55
Differential Torque Control Troubleshooting Chart . . . . . 3 - 55

Automatic Web Tension Control System . . . . . 3 - 56
Tension Control System Components & Operation . . . . . 3 - 56
Reference Drawings & Schematics . . . . . 3 - 57

Roll Ejector . . . . . 3 - 58
Roll Ejector Operation . . . . . 3 - 59
Roll Ejector Interlocks . . . . . 3 - 59
Reference Drawings And Schematics . . . . . 3 - 59

TABLE OF CONTENTS

Section 3. Component Information (continued)

Nip Cradle ..... 3 - 60
Cradle Operation ..... 3 - 60
Reference Drawings And Schematics ..... 3 - 61
Control Settings Chart ..... 3 - 61
Troubleshooting Chart ..... 3 - 62

Hydraulic Unit ..... 3 - 63
Installation Procedures ..... 3 - 63
Start-Up Procedures ..... 3 - 66
Maintaining Proper Oil Temperature ..... 3 - 67
General Hydraulic Unit Maintenance ..... 3 - 69
Hydraulic Unit Troubleshooting Chart ..... 3 - 71

SECTION 4. GENERAL WINDER MAINTENANCE

Maintenance Safety ..... 4 - 2

Lockout/Tagout Procedures ..... 4 - 3

Routine Inspection/Adjustment ..... 4 - 5
Routine Lubrication ..... 4 - 5
Routine Cleaning ..... 4 - 5
Alignment ..... 4 - 6

Winder Lubrication Recommendations ..... 4 - 7
Grease Selection ..... 4 - 7
Greasing Instructions. ..... 4 - 8
Oil Selection ..... 4 - 9
Oil E Selection Chart ..... 4 - 9
Lubrication Chart ..... 4 - 10

APPENDICES

Alignment ..... Insert
Slitter Grinding ..... Insert
List Of Components ..... Insert
Drawings and Schematics ..... Insert

(This Page Left Blank)

Section 1. Overview & General Safety

SYSTEMS OVERVIEW

The winder is used to unwind a continuous sheet from a parent roll, slit it into desired widths, and rewind it again into a set of smaller rolls. Since the resulting rolls will be used for further processing – often at high speed – it is important that they possess the roll structure characteristics needed for safe and efficient rewinding. This section provides a brief overview of the control devices, systems, and safety procedures used to achieve that goal.

AUTOMATIC MODES OF OPERATION: BEL-OIT AND LARS

This winder includes two automatic modes of winder operation: Bel-OIT mode and LARS (Lenox Auto Roll Structure) mode. Both modes control the roll structure systems referred to in the sections that follow. Bel-OIT is a computerized winder control system that provides a fully automatic system for running and controlling all roll structure functions. When operating in LARS mode, the winder runs automatically according to a pre-set program that permits the operator to bias tension while the set is running. See Section 2 for further information about these systems.

ROLL STRUCTURE CONTROL

A roll of paper with good roll structure is tight at the core. Its tension level gradually decreases, layer by layer, until it reaches its lowest levels at the outer layer of the roll. A roll with good structure is free of wrinkles, vibration (roll bounce), starring, ridging, and soft starts (loose cores). It will unwind smoothly and will be unlikely to fail during use. When operating in LARS or Bel-OIT, the two drum winder uses the following systems to control roll structure: automatic rider roll control, tension control, and differential torque control.

Web Tension Control System

The Web Tension-Control system automatically regulates the tension of the sheet as it passes the rolls, slitters, and spreader on its way from the unwind to the drums. This system provides an effective tool for the prevention of interweaving, soft spots, and for the maintenance of roll hardness.

The Web Tension-Control system consists of a tension roll (the after-slitter roll), load cells, and the unwind drive controller. During operation, the web wraps the tension roll, exerting a force on the roll proportional to the tension in the sheet. The load cells sense, measure, and convert that level of force into a feedback signal, which is sent to the unwind drive controller. The controller then compares the feedback signals to setpoints in the current Bel-OIT or Lars program and signals the unwind motor to increase or decrease sheet tension accordingly.

The Web Tension-Control system is designed to function automatically when the winder is building roll sets in LARS or Bel-OIT. See "Web Tension-Control " in Section 3 for further information about this system.

Automatic Rider Roll Control System

The Rider Roll Control system, which automatically controls the amount of pressure applied by the rider roll, plays an important part in forming good roll structure. During the early stages of the winding cycle, this system applies loading to the rider roll, pressing the new roll set down into the drum pocket for a tight start. Later in the cycle, as the roll set's growing weight increases the nip between the roll set and drums, the need for rider roll loading diminishes, and the system automatically reduces the pressure applied by the rider roll.

The Automatic Rider Roll Control system is designed to function automatically when the winder is building roll sets in LARS or Bel-OIT. See "Automatic Rider Roll System" in Section 3 for further information about this system.

Differential Torque Control System

Differential Torque Control is a system that is used to proportionally vary the available torque differential between the front and back winder drums. This system can help to create a tight start by applying a higher percent of available torque at the front drum than at the back drum during the early stages of the winding cycle. Later in the cycle, as the roll set increases in size and the need for torque differential diminishes, a break-point is reached at which the system automatically starts to reduce ("taper") the proportional difference of torque provided by the two drums. This tapering then continues until the split between front and back drum torque reaches a point at which the percent of torque is only slightly higher at the front drum than it is at the back drum.

The Differential Torque Control system is designed to function automatically when the winder is building roll sets in LARS or Bel-OIT. See "Differential Torque Control" in Section 3 for further information about this system.

SAFETY

All systems on this winder must be used in keeping with sound safety practices. This manual contains safety information designed to be used in two ways: first, it is a primary reference for winder personnel, providing them with details and explanations of operational safety messages and procedures; second, it provides safety guidelines and practices for incorporation into yours mill's winder safety training program. Safety sections in this manual include: "General Safety", "Operator Safety", "Lockout/Tagout Procedures", and "Maintenance Safety". This manual also makes frequent use of safety-warning symbols and messages, which are explained in the section "Danger, Warning, Caution, and Notice as Used in This Document".

GENERAL SAFETY

The following notes provide basic safety guidelines that should be incorporated into a comprehensive safety program at your mill.

- Do not remove warning signs.
- Make certain that barriers and guards are in place before starting machine.
- Keep aisles around equipment clear of unnecessary or potentially hazardous articles.
- Wipe up spilled oil, grease, or water to minimize the risk of slips and falls.
- Keep clothing and all parts of the body away from moving parts.
- Keep all non-operating personnel outside safety lines when the system is in operation.
- Keep hands away from belt and chain drives. Maintain all drive component guards in place.
- Do not overreach. Do not stand on the machine when it is running.
- Keep clothing and all parts of the body away from ingoing nips.
- Read Winder Safety Practices, Operator Safety, Maintenance Safety, and the definitions of safety sign messages in Danger, Warning, Caution, and Notice as Used In This Document.

– NOTICE –

Do not attempt to operate, maintain, or repair the winder without reading the following sections of this manual: "Winder Safety Practices", "Operator Safety", "Maintenance Safety", "Lockout/Tagout Procedures", and "Danger, Warning, Caution, and Notice as Used In This Document".

Danger, Warning, Caution, and Notice as Used in This Document

⚠ DANGER

DANGER symbols, as illustrated above, are used in this document to emphasize imminently hazardous conditions or actions that *will*, if not avoided, cause death or serious injury.

⚠ WARNING

WARNING symbols, as illustrated above, are used in this document to indicate *potentially* hazardous conditions or actions that *can*, if not avoided, cause serious injury or death.

⚠ CAUTION

CAUTION symbols, as illustrated above, are used in this document to indicate *potentially* hazardous conditions or actions that can, if not avoided, cause moderate personal injury.

– NOTICE –

NOTICE symbols, when centered and formatted as illustrated above, are used in this document to call attention to technical information, which if not heeded, can result in damage to equipment or creation of potentially hazardous conditions.

(This Page Left Blank)

Section 2. Winder Operation

OPERATOR SAFETY

The following safety notes call attention to potentially hazardous situations. Be sure to review them frequently in conjunction with all aspects of winder operation.

- Do not start the winder if there are any leaks or worn lines.
- Interlocks should be working properly. Do not run the winder above thread speed unless:
  - Core chucks are engaged.
  - Rider roll is lowered and loaded.
  - Roll ejector is retracted.
  - Cradle/barrier is fully raised
  - All personnel are clear.
- Do not operate the winder with damaged cores.
- Intermediate slitters and paper rolls should be stopped before paper is threaded into the winder
- Disengage the slitters and disable them with the SLITTERS OPER./DISABLE key-switch before relocating slitters, changing bands and blades, or performing any inspections or maintenance in the slitter area.
- When starting the sheet on the cores, all operators must be clear before lowering the rider roll, and all hands, legs, and clothing must be clear of ingoing nips.
- After threading the sheet, the operator must not start the winder until he makes sure that everyone is outside of the safety lines. Mirrors should be provided to increase the operator's range of vision.
- Do not raise the rider roll from the rewound roll until the winder is stopped.
- Do not disengage the core chucks while the winder is running.
- Do not eject a rewound roll until the winder is completely stopped and the rider roll, cradle, and coreslides are raised.
- If two rolls interweave, do not attempt to cut them apart until the winder comes to a complete stop.

– NOTICE –

Do not attempt to operate the winder until you have read and fully understand all information in the following sections of this manual: "General Safety", "Lockout/Tagout Procedures", and "Danger, Warning, Caution, and Notice as Used in This Document ".

Operator Safety (continued)

Slitter Safety

To avoid accidents when handling slitters, be sure to observe the following safety precautions:

- Disengage the slitters and disable them with the SLITTERS OPER./DISABLE key-switch before relocating slitters, changing bands and blades, or performing any inspections or maintenance in the slitter area.
- Do not try to adjust the slitters when they are in motion.
- Use gloves and handle slitter blades carefully–they are sharp!

Safety Notes For Shaftless Winding

To avoid accidental ejection of rolls during shaftless winding, be sure to observe the following safety precautions:

- Use cores that are in good condition.
- Core ends must be cut square and butted firmly against each other.
- The chucks must be engaged.
- Use correct chuck adjustment procedures.
- All barrier guards must be in place. Shaftless operation should not be permitted without adequate barrier guards to keep the paper roll(s) in the winder.
- Personnel should not be permitted in front of the winder while it is running unless an adequate barrier is in position.
- The operator should be standing at the benchboard while the winder is running.
- All interlocks must be operational. Do not try to defeat interlocks – they have been installed for safety. Replace any damaged components immediately.
- The rider roll must be kept on the rewind roll whenever the winder is running faster than 'Thread' speed.

– NOTICE –

Do not attempt to operate the winder until you have read and fully understand all information in the following sections of this manual: "General Safety", "Lockout/Tagout Procedures", and "Danger, Warning, Caution, and Notice as Used in This Document ".

USING THIS SECTION

This section provides instructions that describe the preparation and use of the winder. It covers the following topics:

- OPERATOR SAFETY
- WINDER CONTROL PANELS
- LOADING A NEW PARENT ROLL
- THREADING THE WINDER
- MODES OF OPERATION
- PREPARING TO START A NEW SET AFTER THREAD-UP
- RUNNING THE WINDER
- STOPPING THE WINDER
- REMOVING REWOUND ROLLS FROM THE WINDER
  WEB SPLICING
- INTERLOCKS
- OPERATOR'S TROUBLESHOOTING GUIDE

PRESENTATION OF TOPICS IN THIS SECTION

This section provide descriptions of the procedures used to operate the winder. Starting with "Loading A Parent Roll On The Unwind", these procedures follow the usual sequence of winding operations (threading, running, set changing, etc). Supplemental information about operating major machine components is provided in Section 3 Component Information.

BEL-OIT

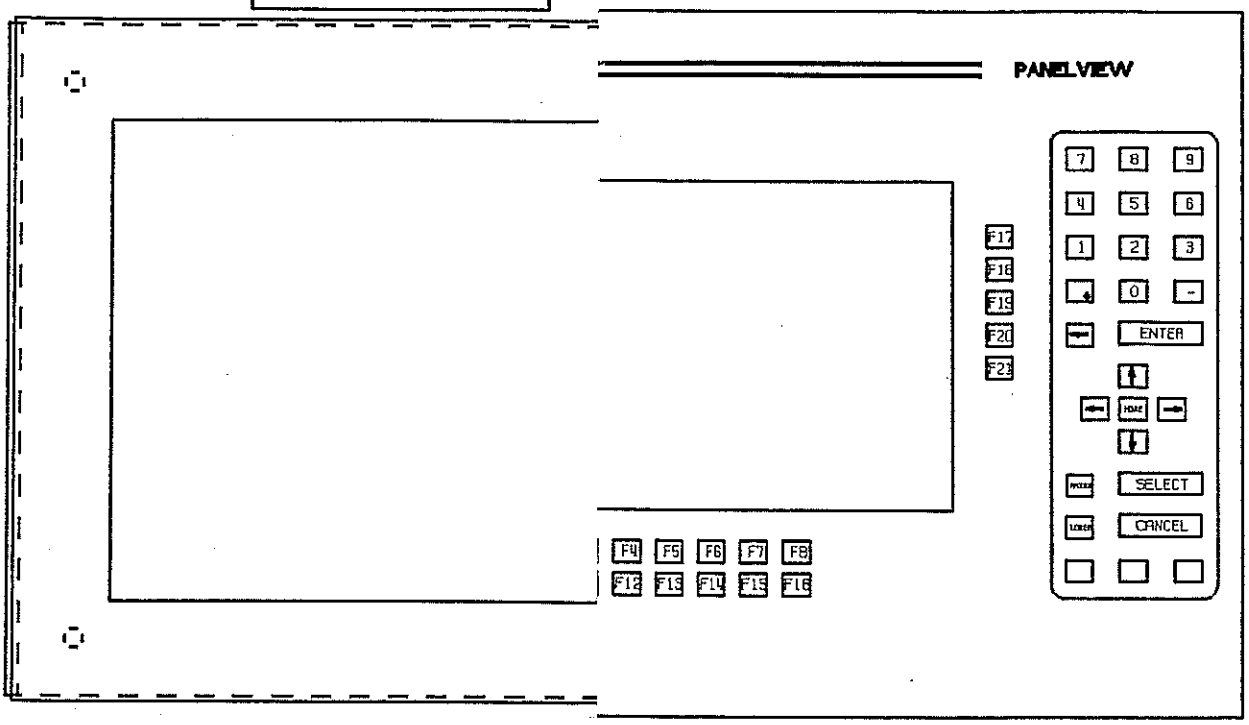

WINDER DROP 1

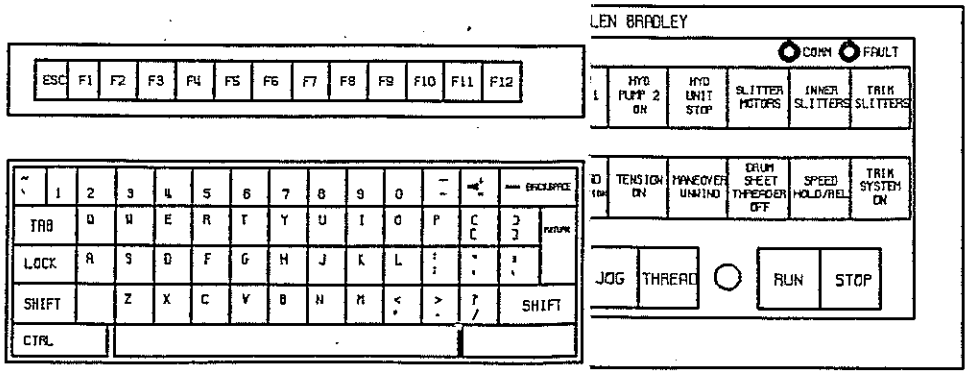

BENCHBOARD CONTROLS

Run/Emergency-Stop/Coast Stop/Reset

EMERGENCY STOP is a red, illuminated push/pull button used for emergency stops: Push to stop/Pull to release. Sheet tension is not maintained during an emergency stop. All EMERGENCY STOP pushbuttons on this machine are illuminated, two position maintained, pull to release. They all light up when pressed, but when any one of them has been used to make an emergency stop, the EMERGENCY STOP button on the bench board will flash to indicate that the winder is in an Emergency-stop condition. See "Stopping The Winder" for a complete description of functions activated/deactivated with this control.

COAST STOP is a yellow pushbutton with a guard ring that is used to bring the winder to a stop by cutting off power to the main drive. When COAST STOP is used, the winder continues to "coast" under the power of inertial forces until it gradually comes to rest. It is used primarily as an emergency stopping method in situations where there is a risk of fire or electrical damage. (See "Stopping The Winder")

RESET is an illuminated pushbutton that is used to reset the winder drive and PLC. It is required after an "E-Stop" or "Coast Stop".

Bel-OIT Keyboard and Screen

The Bel-OIT keyboard and screen are standard PC type operator interface components used to operate the Bel-OIT winder control system. Bel-OIT is a computerized control system that provides the operator with a fully automatic means of controlling winding cycle set point values and curves. See "Running the Winder" later in this section for additional information about Bel-OIT mode. See the Bel-OIT User's Guide for instructions in use of the Bel-OIT winder control system.

Analog Meters

UNWIND LOAD is an analog meter that displays the amperage supplied to the unwind motor.

BACK DRUM LOAD is an analog meter that displays the amperage being supplied to the rear drum motor.

FRONT DRUM LOAD is an analog meter that displays the amperage being supplied to the front drum motor.

TENSION is an analog meter that displays the amount of tension presently in the sheet. Measurement is in PLI.

SPEED is an analog meter that displays the speed of the paper passing through the winder. Measurement is in feet per minute.

RIDER ROLL LOAD is an analog meter that displays rider roll load feed back in PLI.

Panel View Screen and Keypad

The Panel View screen and keypad is used to select a mode of operation (LARS or Bel-OIT) and to display, enter, and edit the variable numerical values the winder control system uses to build a set of rolls during LARS (Lenox Automatic Roll Structure mode) operation. See "Using the Panel View" section.

Potentiometer

PERCENT UNWIND MANEUVER When used in the *Maneuver Unwind* mode, this potentiometer is used to control direction and speed of the unwind spool as follows: when the potentiometer is at zero, the unwind will be stationary; as the dial is rotated toward "+ 100", payout speed will increase; as the dial is rotated toward "– 100", takeup speed will increase. When in *Thread* mode, this potentiometer functions as follows: the unwind moves at thread speed when the dial is at the zero position; speed will be biased if the dial is rotated toward "+" or "–".

Winder Drop 1 Panel

HYD PUMP 1 ON is an illuminated pushbutton that is used to activate hydraulic pump #1. Press to start pump #1. This control lights up when that pump is running.

HYD PUMP 2 ON is an illuminated pushbutton that is used to activate hydraulic pump #2. Press to start pump #2. This control lights up when that pump is running.

HYD UNIT STOP an illuminated pushbutton that is used to stop the hydraulic pumps. Press to stop Hydraulic Pumps. This control lights up to indicate Hydraulic Pumps off. Button has no effect on hydraulic pumps unless Web is at 0 speed.

SLITTER MOTORS is an illuminated pushbutton that is used to activate or deactivate the slitter motors. This is a toggle style control: press to activate/press to deactivate. This control lights up when the slitter motors are on; it flashes if any slitter motors are faulted.

INNER SLITTERS is an illuminated pushbutton that is used to engage or disengage the inner slitters. This is a toggle style control: press to engage; press to disengage. This control lights up when the inner slitters are engaged.

TRIM SLITTERS is an illuminated pushbutton that is used to engage and disengage the trim slitters. This is a toggle style control: press to engage; press to disengage. This control lights up when the trim slitters are engaged.

UNWIND OSCILLATION is an illuminated pushbutton that is used to activate/deactivate unwind oscillation. This is a toggle style control: press to activate oscillation; press to deactivate it. When oscillation is active, this button will light up and the unwind will oscillate whenever the winder is running above low speed.

TENSION ON is an illuminated pushbutton that is used to activate/deactivate unwind sheet tension. This is a toggle style control: press to turn tension on; press again to turn it off. This control lights up when tension is on.

MANEUVER UNWIND is a pushbutton used to activate the PERCENT UNWIND MANEUVER potentiometer.

DRUM SHEET THREADER OFF is an indicator that lights up when the drum sheet threader is off.

SPEED HOLD/REL is an illuminated, toggle type pushbutton used as a "pause" control during winder acceleration or deceleration to "hold" the winder at its current speed. When it is pressed again, this control will "release" the hold and the winder will ramp to the preset speed setpoint. This button lights up when pressed to hold.

TRIM SYSTEM ON is an indicator that lights up when the trim removal system is on.

JOG is an illuminated pushbutton that causes the winder drums to turn at a slow "jog" speed. Press to move web through winder at "jog speed". This control lights up to indicate winder is moving at jog speed. Will not operate if the winder is in Thread or Run modes or if drives are not ready.

THREAD is an illuminated pushbutton that is used to turn the winder drums and move the web through winder at thread speed. This control will not function if the drives are not ready; it lights up when Thread mode is active.

RUN is an illuminated pushbutton that is used to put the winder into "run" mode. Press to build rolls. This control lights up to indicate the winder is in Run mode. Pressing this control will have no effect unless all the interlocks required for building rolls are satisfied.

STOP is an illuminated pushbutton that is used to bring the winder to a complete, controlled stop. Press this button to stop drives and web motion through the winder. Use of this control cancels Run and Thread modes and does not permit Jogging. This control flashes to indicate winder is stopping; it remains steadily lit when the web is at 0 speed.

Unwind Panel 500 - Operator's Side

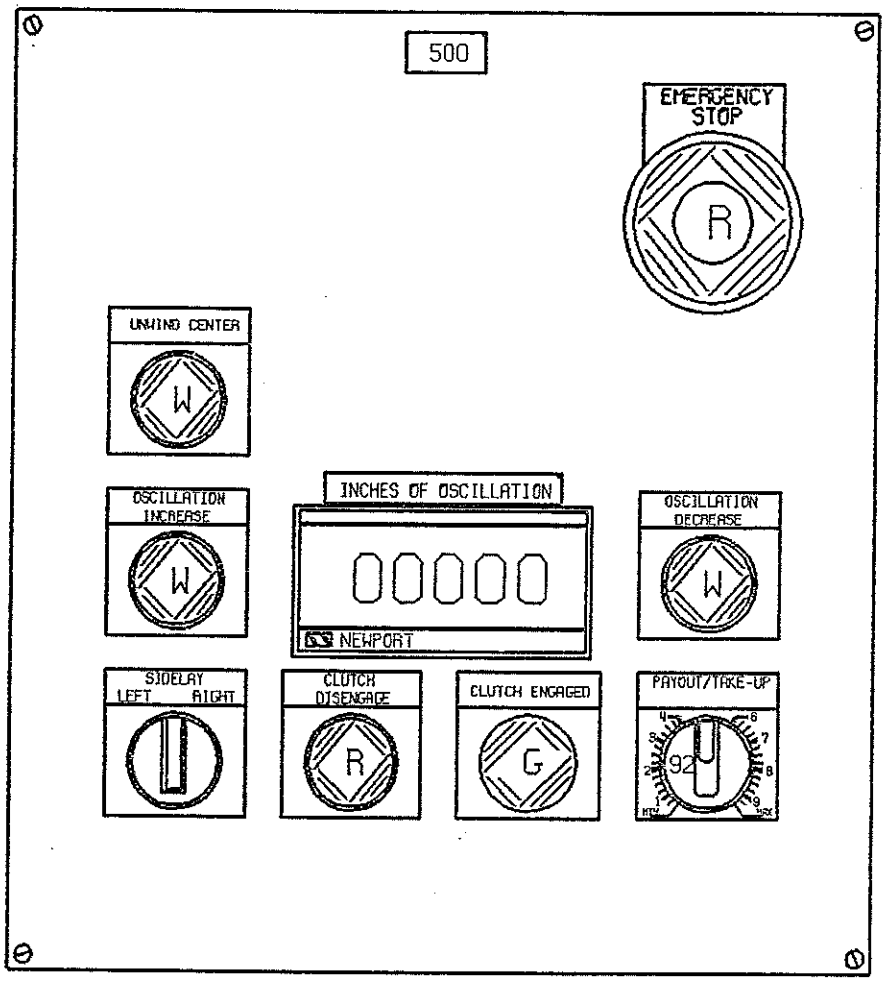

Unwind Panel 500 - Operator's Side

EMERGENCY STOP is an illuminated push/pull button used for emergency stops. Push to Stop. Pull to enable drive and winder reset. This emergency stop button illuminates and remains *steadily* lit when it is pressed, indicating that an emergency stop is active. The benchboard emergency stop button *flashes* when this button or any of the winder's other emergency stop buttons (on the slitter panel, unwind panels, etc.) have been pressed to activate an emergency stop. Note: web tension is not maintained when Emergency Stop is used. See "Stopping the Winder" for a complete description of functions activated/deactivated with this control.

UNWIND CENTER is an illuminated pushbutton used to move the unwind automatically to its centered position for spool removal and insertion. Press to cause unwind to move to center position. Flashes to indicate Unwind is centering. Lights when Unwind is at center position. Does not light if Unwind is oscillating and passes through center position.

OSCILLATION DECREASE is an illuminated pushbutton that is used to decrease the amount of oscillation at the unwind. Maximum amount of decrease possible is 4 inches.

OSCILLATION INCREASE is an illuminated pushbutton that is used to increase the amount of oscillation at the unwind. Maximum amount of increase possible is 4 inches.

INCHES OF OSCILLATION is an LED meter that is used to display the amount of oscillation (0 to 4 inches) in terms of the unwinds position on the stands.

SIDELAY LEFT/RIGHT is a spring-loaded, center-neutral selector switch used to move the unwind toward the operator or drive side in order to center the sheet with the trim slitters ('Front' = operator side; 'Back' = drive side). The amount of adjustment is +/- 2.0 inches from the center of the unwind stands.

CLUTCH DISENGAGE is an illuminated pushbutton that is used to disengage the clutch. When the clutch has been disengaged, this control lights up. The web must be at zero (0) speed for this pushbutton to be active. This control flashes when the clutch is moving toward unclutch position, and it remains steadily lit when the clutch is fully disengaged.

CLUTCH ENGAGE is an illuminated pushbutton used to engage the clutch. When this control is used, the unwind drive will move at "crawl" speed to aid in engagement until the clutch is fully engaged. This control flashes when the clutch is moving toward engaged position, and it remains steadily lit when the clutch is fully engaged.

PERCENT UNWIND MANEUVER When used in the *Maneuver Unwind* mode, this potentiometer is used to control direction and speed of the unwind spool as follows: when the potentiometer is at zero, the unwind will be stationary; as the dial is rotated toward "+ 100", payout speed will increase; as the dial is rotated toward "– 100", takeup speed will increase. When in *Thread* mode, this potentiometer functions as follows: the unwind moves at thread speed when the dial is at the zero position; speed will be biased if the dial is rotated toward "+" or "–".

Unwind Panel 560 - Drive Side

EMERGENCY STOP is an illuminated push/pull button used for emergency stops. Push to Stop. Pull to enable drive and winder reset. This emergency stop button illuminates and remains *steadily* lit when it is pressed, indicating that an emergency stop is active. The benchboard emergency stop button *flashes* when this button or any of the winder's other emergency stop buttons (on the slitter panel, unwind panels, etc.) have been pressed to activate an emergency stop. Note: web tension is not maintained when Emergency Stop is used. See "Stopping the Winder" for a complete description of functions activated/deactivated with this control.

CLUTCH ENGAGE is a green illuminated pushbutton used to engage the clutch. When this control is used, the unwind drive will move at "crawl" speed to aid in engagement until the clutch is fully engaged. This control flashes when the clutch is moving toward engaged position, and it remains steadily lit when the clutch is fully engaged.

CLUTCH DISENGAGE is a red illuminated pushbutton that is used to disengage the clutch. When the clutch has been disengaged, this control lights up. The web must be at zero (0) speed for this pushbutton to be active. This control flashes when the clutch is moving toward unclutch position, and it remains steadily lit when the clutch is fully disengaged.

SIDELAY LEFT/RIGHT is a spring-loaded, center-neutral selector switch used to move the unwind toward the operator or drive side in order to center the sheet with the trim slitters ('Front' = operator side; 'Back' = drive side). The amount of adjustment is +/- 2.0 inches from the center of the unwind stands.

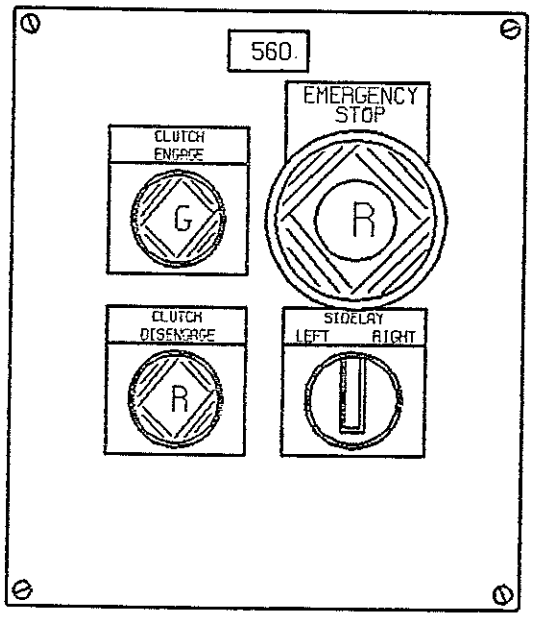

Slitter Panels 615 & 650

EMERGENCY STOP is an illuminated push/pull button used for emergency stops. Push to Stop. Pull to enable drive and winder reset. This emergency stop button illuminates and remains *steadily* lit when it is pressed, indicating that an emergency stop is active. The benchboard emergency stop button *flashes* when this button or any of the winder's other emergency stop buttons (on the slitter panel, unwind panels, etc.) have been pressed to activate an emergency stop. Note: web tension is not maintained when Emergency Stop is used. See "Stopping the Winder" for a complete description of functions activated/deactivated with this control.

SPREADER WRAP is an LED control that indicates the current percent of wrap of the lead-in spreader. See Spencer Johnston documentation for additional information about this control

SLITTERS ENABLED is an indicator light that illuminates when slitters are enabled.

SLITTERS DISABLE/OPER. is a "pass-key" type selector switch. When this selector is in the 'Disabled' position, the slitters are locked out of the circuit, preventing them from being turned on from any other location.

LEAD-IN SHT. HLDR. ENG/DISENG is an illuminated selector switch that is used to engage/disengage the lead-in sheet holder. This is a spring-loaded, center-neutral selector.

LEAD-IN SHT. THRDR. ENG/DISENG is an illuminated selector switch that is used to engage/disengage the lead-in sheet threader. This is a spring-loaded, center-neutral selector.

AIR SHOWER OFF/AUTO/ON is an illuminated, three-position selector switch that is used to turn on the air at the air lubricated sheet threader pans. The center position ('Auto') is the default of this selector.

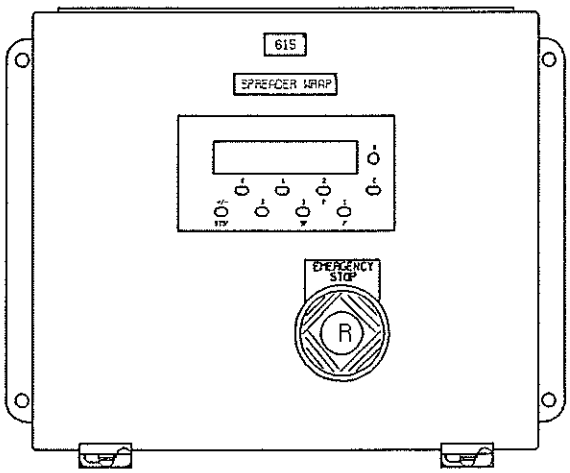

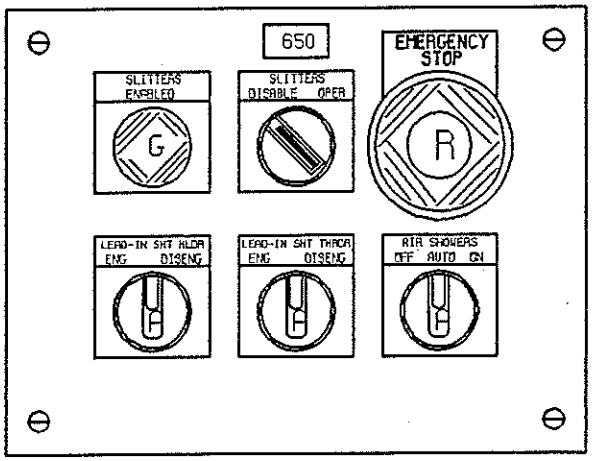

WINDER FRAME PANEL 700

The Winder Frame Panel 700 contains devices that are used to control drive related functions, the cradle, rider roll, core slides, threader, slitters, auto eject, and core chuck operations.

EMERGENCY STOP is an illuminated push/pull button used for emergency stops. Push to Stop. Pull to enable drive and winder reset. This emergency stop button illuminates and remains *steadily* lit when it is pressed, indicating that an emergency stop is active. The benchboard emergency stop button *flashes* when this button or any of the winder's other emergency stop buttons (on the slitter panel, unwind panels, etc.) have been pressed to activate an emergency stop. Note: web tension is not maintained when Emergency Stop is used. See "Stopping the Winder" for a complete description of functions activated/deactivated with this control.

RIDER ROLL LATCHED is an indicator that lights up when the rider roll assembly is fully raised and latched.

RIDER ROLL LOADED is a light used to indicate that the rider roll is loaded. When the rider roll is descending, the light remains dark. When the rider roll descends within the soft load vicinity of the roll, the light flashes. After the rider roll contacts the roll and fully loads, the light illuminates and remains steadily lit.

RIDER ROLL RAISE/LOWER is a non-illuminated selector switch used to raise and lower the rider roll. When this selector is turned to 'Raise' and released, the rider roll will continue to rise until it reaches its fully-raised and latched position. When this selector is used to lower the rider roll, the core slides must first be lowered, and then this selector must be *held* at 'Lower' (the rider roll will stop moving if this switch is released before loading starts). Note: the rider roll will start to load automatically when the rider roll comes into contact with the cores.

INITIALIZE RIDER ROLL is an illuminated pushbutton that is used to start the articulating rider roll wheel-initialization process.

FRONT CHUCK OUT/IN is a non-illuminated spring-return-to-center selector switch used to move the front chuck in or out. A similar control for the back chuck is located on Winder Frame Panel 760 - Drive Side. When positioning chucks, the chuck designated as the "fixed" position chuck (either front or back may be so designated) should be positioned to align with the web's trimmed edge. The "floating" chuck should be positioned to allow ease of chucking. Note: When positioning the "fixed" chuck, the chucks should be chucked without cores.

CORE CHUCKS UNCHUCK/CHUCK is an illuminated, spring-return-to-center selector switch used to engage or disengage the core chucks from the cores. When the chucks are fully engaged, this switch illuminates and remains steadily lit.

EJECT AIR SHWR OFF/ON is an illuminated selector switch used to control the air shower assist used during back drum splicing. In 'On' the threading air will come on when the drum threader is enabled. 'Off' will disable the air. The switch will illuminate and remain steadily lit when the air is on.

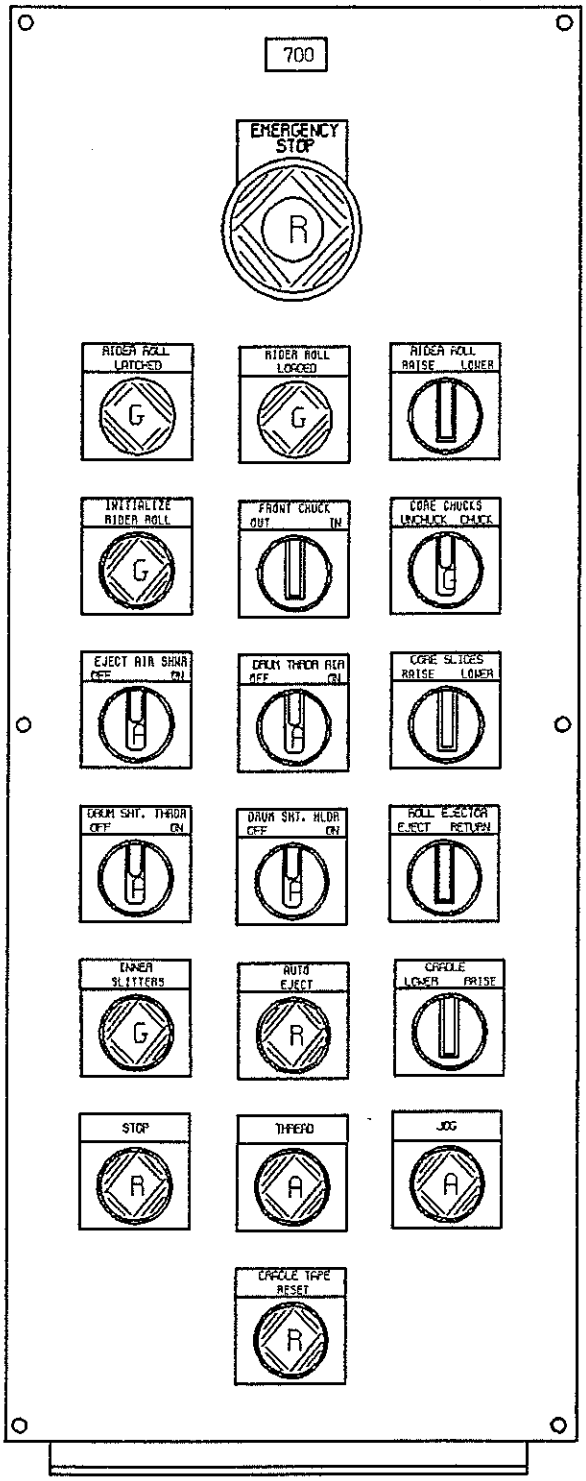
700
EMERGENCY STOP
R
RIDER ROLL LATCHED
G
RIDER ROLL LOADED
G
RIDER ROLL RAISE LOWER
INITIALIZE RIDER ROLL
G
FRONT CHUCK OUT IN
CORE CHUCKS UNCHUCK CHUCK
EJECT AIR SHWR OFF ON
DRUM THROR AIR OFF ON
CORE SLIDES RAISE LOWER
DRUM SHT. THROR OFF ON
DRUM SHT. HLDR OFF ON
ROLL EJECTOR EJECT RETURN
DANCER SLITTERS
G
AUTO EJECT
R
CRADLE LOWER RAISE
STOP
R
THREAD
A
JOG
A
CRADLE TAPE RESET
R

Winder Frame Panel 700 (continued)

DRUM THDR AIR OFF/ON is an illuminated spring-return-to-center selector switch that is used to turn the drum sheet threader air showers on and off. Note: The showers will turn on automatically whenever the winder is put into thread mode; this switch must be used to turn them off before the winding is resumed.

CORE SLIDES RAISE/LOWER is a non-illuminated spring-return-to-center selector switch used to raise and lower the core chucks. When this selector is held in its 'Lower' position the slides will lower (providing the roll ejector is retracted). When held in its 'Raise' position, the slides will raise (providing the chucks are unchucked and the rider roll is raised).

DRUM SHT. THRDR OFF/ON is an illuminated spring-return-to-center selector switch that is used to turn the sheet threader on or off. The threader can be enabled at zero to thread speed. When enabled, this button illuminates and remains steadily lit. The threader can be turned off completely by setting this control at 'Off'. When this selector is left in 'On' position, the threader will automatically turn on when the THREAD button is pressed, and it will turn off when the RUN button is pressed.

DRUM SHT. HLDR OFF/ON is a spring-return-to-center selector switch used to engage or disengage the back drum sheet holder. Note: the winder must be stopped before this control can be used to engage the holder.

ROLL EJECTOR EJECT/RETURN is a spring-to-center, non-illuminated selector switch that is used to operate the roll ejector. When this selector is held in 'Eject' position with the cradle, core chucks and rider roll are raised, the ejector will move forward to eject the rewound rolls. When held in its 'Return' position, the roll ejector will move to its fully retracted position. The ejector will stop moving if the switch is released.

INNER SLITTERS is an illuminated pushbutton used to toggle the engagement/disengagement of the inner slitters. The button lights up when the inner slitters are engaged. The slitters must be engaged to run the winder. If the slitters are engaged and the winder is at zero speed, pressing the button will disengage the slitters.

AUTO EJECT is an illuminated pushbutton used to initiate automatic ejection and roll unloading.

Note: the winder must be stopped before this control can be used.

CRADLE LOWER/RAISE is a spring-to-center, non-illuminated selector switch that is used to operate the cradle. When this control is held at 'Raise', the cradle raises until it reaches its fully raised position; when held at 'Lower', cradle lowers until it reaches fully lowered position. This control must be held in position for motion to continue. The cradle stops moving if this selector is released at any point before the cradle reaches either fully raised or fully lowered position.

STOP is an illuminated pushbutton that is used to bring the winder to a complete, controlled stop while maintaining sheet tension. The button flashes to indicate the winder is decelerating. It illuminates and remains steadily lit when the winder is fully stopped.

THREAD is an illuminated pushbutton that is used to turn the winder at thread speed. When this button is pressed, it lights up to indicate acceptance of the command, and the winder will continue to rotate at thread speed until a stop button is pressed. This button does not need to be held for drum rotation to continue.

JOG is an illuminated pushbutton that causes the winder drums to turn slowly for as long as it is pressed; when it is released, the drums stop. When pressed, the button illuminates and remains steadily lit to indicate acceptance of the command.

CRADLE TAPE RESET is an illuminated pushbutton used to reset the cradle for normal operation after the cradle has been brought to a stop with the cradle's CRADLE TAPE SWITCH.

WINDER FRAME PANEL 760

The Winder Frame Panel 760 contains the following controls:

EMERGENCY STOP is an illuminated push/pull button used for emergency stops. Push to Stop. Pull to enable drive and winder reset. This emergency stop button illuminates and remains *steadily* lit when it is pressed, indicating that an emergency stop is active. The benchboard emergency stop button *flashes* when this button or any of the winder's other emergency stop buttons (on the slitter panel, unwind panels, etc.) have been pressed to activate an emergency stop. Note: web tension is not maintained when Emergency Stop is used. See "Stopping the Winder" for a complete description of functions activated/deactivated with this control.

DRUM BRAKE AUTO/OFF is an illuminated selector switch used to control the back drum brake. When the selector is in the 'Auto' position, the brake will engage when the winder drive is at zero speed. When it is in its 'Off' position, the brakes will remain disengaged. This is useful for inspecting drum and roll conditions. The button will light up when the brake is engaged.

BACK CHUCK IN/OUT is a non-illuminated spring-return-to-center selector switch used to move the back chuck in or out. A similar control for the front chuck is located on Winder Frame Panel 700 - Operator Side. When positioning chucks, the chuck designated as the "fixed" position chuck (either front or back may be so designated) should be positioned to align with the web's trimmed edge. The "floating" chuck should be positioned to allow ease of chucking. Note: When positioning the "fixed" chuck, the chucks should be chucked without cores.

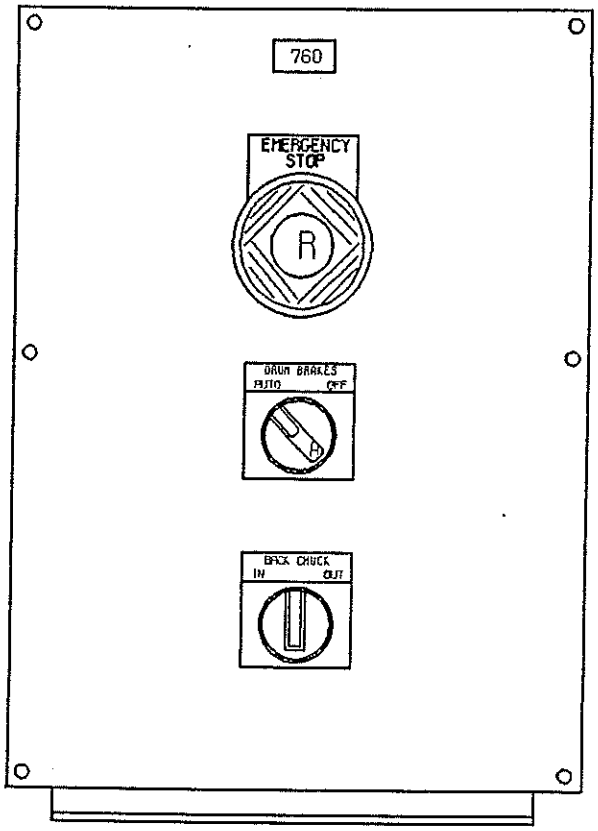

LOADING A PARENT ROLL ON THE UNWIND

The instructions that follow proceed from a point when the winder is at rest, no paper, spools, or cores are on the machine, and the hydraulic unit is 'ON'. When these conditions exist, use the following procedure to load a new parent roll onto the unwind:

1. Make sure the clutch is disengaged. If necessary, disengage it by pressing the CLUTCH DIS-ENGAGE button (on 560 or 650).

2. Make sure the unwind is centered. If necessary, use the UNWIND CENTER button on Panel 500.

– NOTICE –

Make sure that all requirements described in "General Safety" and "Operator Safety" have been met before proceeding further. Refer to those sections in this manual.

3. Lower the new parent roll (reelspool) into the seats by crane.

4. Remove the crane hooks from the parent roll.

5. Engage the clutch by pressing the CLUTCH ENGAGE button on Panel 560; the crane hook stop will automatically raise to prevent the spool from being lifted while the clutch is en-gaged.

6. If necessary, re-position the reel laterally by using the SIDELAY LEFT/RIGHT selector switch on Panel 500 or 560.

7. At the benchboard, set the unwind to feed paper from the top or the bottom of the parent roll.

The parent roll is now ready, and threading can be started (see "Threading The Winder" in this section).

THREADING THE WINDER

The instructions that follow proceed from a point when the winder is at rest, a parent roll is on the unwind, all paper rolls have been removed from the windup section, and the hydraulic unit is 'ON'. When these conditions exist, use the following procedure to thread the winder.

1. Make sure that the parent roll is secured correctly in the unwind. (See "Loading A Parent Roll On The Unwind" in this section)

2. Cut or tear the sheet so that it tapers to a leading edge in line with, and slightly narrower than, the sheet threader.

3. Disengage the slitters with the INNER SLITTERS button on panel 700 or the benchboard. The lights in this control will go out when the slitters are disengaged.

⚠ WARNING

Slitter knife edges can cut or sever hands and fingers. If inspection, blade changing, or manual relocation of slitters is necessary, the slitters must be disabled by turning the SLITTERS DISABLE/OPERATE key-switch on Panel 610 to its 'Disable' position before anyone enters the slitter area. Do not attempt to handle slitters while the blades are turning.

4. If any adjustment, relocation, or inspection of slitters is desired, turn the SLITTERS DISABLE/OPER pass-key selector on the Slitter Panel 650 to its 'Disable' position before proceeding further (see Warning above).
   Note: Once the slitters have been disabled, the SLITTERS DISABLE/OPER control must be returned it to its 'OPER' position before winding can be resumed.

5. When all slitter adjustments have been completed, perform the following at the benchboard:

   a. Use the Panel View to set the winder speed to zero (0) and to turn off the tension.

   b. Turn on the trim removal system. Use the TRIM SYSTEM control on the benchboard Panel View screen.

6. Prepare the windup, using the controls on Panel 700:

   Note: At this point the pocket should still be empty following the ejection of the last roll set. Use the following procedure to make sure that the rider roll, roll ejector, cradle, and core slides are in their required positions for threading up the new set:

   a. Make sure the rider roll is fully raised. Use the RIDER ROLL RAISE/LOWER selector if necessary.

Threading the Winder (continued)

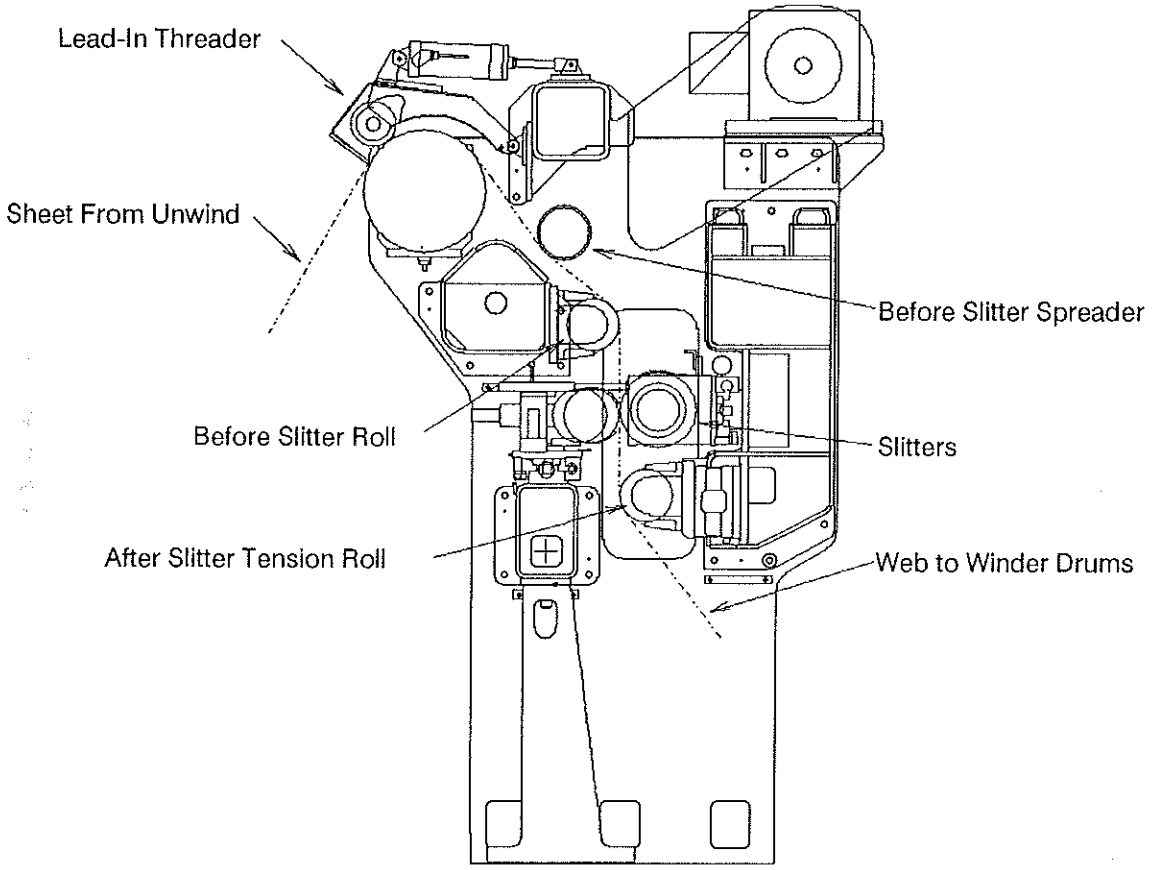

b. Make sure roll ejector is fully retracted. Use the ROLL EJECTOR EJECT/RETURN selector switch.

c. Lower the cradle to its fully lowered position. This will provide access to the pocket for loading and taping cores later on. Use the CRADLE LOWER/RAISE selector.

d. Make sure the coreslides are fully lowered. Use the CORE SLIDES RAISE/LOWER selector switch.

e. Make sure the corechucks are unchucked. Use the CORE CHUCKS UNCHUCK/CHUCK selector.

Threading The Winder (continued)

f. Turn on the drum sheet threader. Use the DRUM SHT. THRDR selector.

Note: The threader air showers will turn on automatically when the drum sheet threader is turned on if the AIR SHOWERS OFF/AUTO/ON selector has been left in 'Auto' position.

g. At Slitter Panel 650, use the LEAD-IN SHT THRDR ENG/DISENG. selector turn on the lead-in sheet threader.

h. At the benchboard or Panel 700, press the THREAD button. The winder will start to run at thread speed.

7. At the benchboard, payout paper from the unwind as follows;

   a. Set the unwind to payout from the top or bottom. Use the Panel View.
   b. Activate the PERCENT UNWIND MANEUVER potentiometer by pressing the MANEUVER UNWIND button on the benchboard.

   c. Using the PERCENT UNWIND MANEUVER potentiometer to control the unwind payout speed, payout enough paper from the unwind for the tapered leading edge of the sheet to reach the lead-in roll with some slack left for handling.

8. Thread the sheet through the winder as follows:

   a. Guide the tapered leading edge of the sheet into the nip between the lead-in threader and the lead in roll. The sheet should then pass under the before slitter spreader, over the before slitter roll, and between the top and bottom slitters.

   b. Turn on the slitter motors. Press the SLITTER MOTORS button on the benchboard.

   c. Engage the trim slitters. Use the TRIM SLITTERS button on the benchboard.

   d. From the front drum side of the winder, pull the sheet out from between the winder drums until the full width of the sheet reaches the drums. Straighten the sheet.

   e. Turn on the tension. Use the TENSION ON button on the benchboard.

9. Engage the inner slitters. Use the INNER SLITTERS button on the benchboard or Panel 700.

10. Continue to feed the sheet until the slits reach the drum pocket.

11. Press the STOP button (on Panel 700 or the Benchboard); threading will stop.

12. Engage the sheet holder. Use the DRUM SHT. HLDR selector Winder Frame Panel 700.

13. Place cores in the drum pocket. (If cores were in the pocket before threading was started, this step will be unnecessary.)

14. Use the CORES UNCHUCK/CHUCK selector on panel 700 to engage the chucks with the cores.

15. Tear off the unused leading edge and attach the remaining web to the cores.

16. Lower the rider roll until it starts to "soft load" on the cores. Use the RIDER ROLL RAISE/LOWER selector on panel 700. The rider roll will automatically load at the correct starting nip.

17. Still at Winder Frame Panel 700, use the DRUM SHT. HLDR selector on Winder Frame Panel 700 to disengage the drum sheet holder.

18. Move the cradle to its fully raised position. Use the CRADLE LOWER/RAISE selector on panel 700.

19. Take up the slack. Use the PERCENT UNWIND MANEUVER on the benchboard.

Threading has now been completed and the winder is ready to run.

⚠ WARNING

Moving winder components and rotating paper rolls can pinch, crush, or trap people, resulting in severe injury or death. Always make sure all personnel are out of the operating zone before starting to run the winder.

STARTING THE WINDER

New roll sets are normally started for two reasons: winding has been interrupted to rethread the winder, or a new set is to be wound from the current parent roll after a set change.

STARTING THE WINDER AFTER THREAD-UP

– NOTICE –

The following conditions must exist before starting to run a new set: cradle is raised; rider roll is lowered and loaded; no rolls are in the pocket; roll ejector is in returned position; core chucks are lowered and engaged with the cores; drum sheet holder is disengaged; the tail is properly prepared; the winder is fully stopped, but no E-Stop conditions exist. Before starting, you must also make sure that the parameters have been set, the slitter motors are on, and the sheet has been threaded correctly.

When the above requirements have been met, use the following procedure to start a new set after thread-up:

⚠ WARNING

Moving winder components and rotating paper rolls can pinch, crush, or trap people, resulting in severe injury or death. Always make sure all personnel are out of the operating zone before starting to run the winder.

1. With the winder fully stopped, select a mode of operation.

   Bel-OIT can be used for most normal winder operation. If you need to switch modes, use the LARS MODE control on the Panel View. (See "Running the Winder" later in this section for full descriptions of both modes.) The winder must be at zero (0) speed and not in E-Stop before changing modes.

2. If a new Bel-OIT or LARS program is to be used for the next set, select the program to be run. (See the *Bel-OIT User's Guide* and/or "Operating in LARS Mode" as appropriate.)

   If the program used for the set just completed is to be *repeated*, proceed to step 4.

3. If new setpoints and stop-to's need to be entered for the new set, enter them now. (See the *Bel-OIT User's Guide* and/or "Operating in LARS Mode" as appropriate.)
   Note: Bel-OIT will only download setpoints after the roll set has been ejected and before the rider roll is loaded.

4. Press the RUN button the Winder Drop 1 Panel on the benchboard.

The winder will now start to run according to the program and setpoints selected in steps 2 and 3. For information about running the winder after it has started see "Running the Winder".

STARTING THE WINDER AFTER A SET CHANGE

New roll sets are normally started for two reasons: a new set is to be wound from the current parent roll after a set change; or winding has been interrupted to rethread the winder (see "Starting The Winder After Thread-up"). This section describes the procedure used in the first instance: starting after a set change.

– NOTICE –

The following conditions must exist before starting to run a new set: cradle is raised; rider roll is lowered and loaded; no rolls are in the pocket; roll ejector is in returned position; core chucks are lowered and engaged with the cores; drum sheet holder is disengaged; the tail is properly prepared; the winder is fully stopped, but no E-Stop conditions exist. Before starting, you must also make sure that the parameters have been set, the slitter motors are on, and the sheet has been threaded correctly.

When the above requirements have been met, use the following procedure to start a new set after thread-up:

1. With the winder fully stopped, accept or change the set plan for the next set as follows:

Repeat Last Set	If the program used for the set just completed is to be *repeated*, proceed to step 2.
Change Bel-OIT Program	If a new Bel-OIT program is to be used for the next set, select the program to be run. (See Bel-OIT User's Guide.)
Change Mode	To switch modes (Bel-OIT to LARS or LARS to Bel-OIT), use the Panel View.
Change Set Points	If new setpoints and stop-to's need to be entered for the new set, enter them now (See Bel-OIT User's Guide.)

⚠ WARNING

Moving winder components and rotating paper rolls can pinch, crush, or trap people, resulting in severe injury or death. Always make sure all personnel are out of the operating zone before starting to run the winder.

2. With all drive permissives met—there must be no fault messages on the Panel View screen—press the RUN button on the benchboard.

   The winder will now start to run according to the program and setpoints selected in step 1. For information about running the winder after it has started see "Running the Winder".

RUNNING THE WINDER

A new set can be run when the following conditions exist: threading has been completed (see "Threading The Winder"), a mode of operation has been selected (see below), and any desired revisions to the "stop-to" values have been made ("Starting The Winder").

MODES OF WINDER OPERATION

There are two modes of operation: Bel-OIT and LARS (Lenox Automatic Roll Structure mode). Bel-OIT is a computerized winder control system that provides the operator with a fully automatic system for controlling the winding cycle. It enables the operator to regulate all roll structure and winder operating functions from the Bel-OIT keyboard and screen. LARS mode provides the operator with a choice of twenty preset roll plans, each containing a different combination of torque, tension, and rider roll settings and roll structure curves.

Bel-OIT Mode

The Bel-OIT system is a computerized winder control system that automatically regulates the winding cycle. It is operated from the Bel-OIT computer keyboard and screen on the benchboard.

The Bel-OIT system makes use of a database of winding programs containing all information needed to wind roll sets according to the specifications of existing set plan programs, and It provides the operator with the ability to modify any of those programs or to create entirely new ones. The system includes a database containing the grade, basis weight, caliper and density of all paper grades currently loaded in the system, and it provides data entry screens that are used to change tension, torque, and nip setpoints, to permanently store newly created or edited programs in the system's memory, or to delete programs when necessary.

For description of procedure used to initiate Bel-OIT operation, see "Running In Bel-OIT Mode" later in this section. For detailed information about operation in Bel-OIT mode, see the *Bel-OIT User's Guide.*

LARS Mode

LARS (Lenox Auto Roll Structure) mode, which is the default mode of operation on this winder, provides the operator with a fully automatic system for inputting winding settings and parameters. The system includes up to twenty program slots, each of which is loaded with a different set of pre-programmed setpoints. To select a set of parameters, the operator need only input a two digit code into the Panel View keypad on the benchboard. LARS mode is initiated from the LARS MODE button on the Panel View. When operating in LARS mode, the winder runs automatically, according to the pre-selected roll-structure curves and setpoints (rider roll nip, drum torque, and web tension) contained in the program selected by the operator.

During LARS operation, web tension, torque, and rider roll nip can be adjusted (biased) by the operator to limits of +/- 30% of the setpoint values of the LARS program currently in use.

SELECTING A MODE OF OPERATION

Selection of Bel-OIT or LARS as the mode of winder operation is determined by use of the LARS MODE and BEL-OIT MODE functions on the Panel View on the Benchboard. These functions "toggle" with each other: when one mode is active, the other is inactive. LARS is designed to be the default mode of operation on this winder, and it can remain active at all times unless there is a need to switch over to Bel-OIT.

Note: The winder must be at zero (0) speed, but not in E-Stop before there is a change made in the mode of operation.

BIASING CURVES

The term *biasing* refers to the raising or lowering of a curve without changing the proportional relationship of the setpoints (the shape) of the curve. Web tension, torque, and rider roll nip loading can all be biased +/- 30% in both LARS mode and Bel-OIT mode – while the winder is operating – by use of the Biasing screen in the Panel View on the benchboard.

Bel-OIT MODE OPERATION

Bel-OIT is a computerized winder control system that provides the operator with a fully automatic system for controlling the winding cycle set point values and curves. It enables the operator to regulate all roll structure functions from the Bel-OIT benchboard.

Bel-OIT mode makes use of a database of winding programs containing all information needed to wind roll sets according to the specifications of existing set plan programs, and It provides the operator with the ability to modify any of those programs or to create entirely new ones. The system includes a database containing the grade, basis weight, caliper and density of all paper grades currently loaded in the system, and it provides data entry screens that are used to change tension, torque, nip, and speed setpoints, to permanently store newly created or edited programs in the system's memory, or to delete programs when necessary.

This section provides an overview of the following: Bel-OIT functions, initiation of Bel-OIT mode operation, and running while in Bel-OIT mode. Refer to the *Bel-OIT User's Guide* for detailed description of the procedures used to operate the Bel-OIT system.

Bel-OIT Mode Functions

The Bel-OIT system consists of four major functional components, which are as follows:

- Existing Roll Sets Database
- Winder Curve and Stop Control
- Error Message System
- Maintenance Message System

The Winder Curve functions are used to regulate speed, tension, torque, and nip values involved with winding cycle curves. Curves can be loaded directly from the database into the system without editing, or their set points can be modified to meet changes desired by the operator.

Existing Roll Sets Database
The View Existing Sets screen contains a list of all existing roll sets that have been entered into the database. Each roll set on the list is described according to code, customer, order, grade, and operator notes as entered by the operator.

Viewing, Creating, and Editing Set-Point Curves
Editing screens are used to view, create and edit set-point curves. The following screens are used for that purpose: Speed Versus Diameter screen, Tension Versus Diameter screen, Torque Versus Diameter screen, and Nip Versus Diameter screen

Creating New Roll Set Plans and Editing Existing Roll Set Plans
Screens containing entry fields for order number, customer's name, paper grade, and notes are provided to create new roll set plans or to edit plans of sets that have already been wound.

Biasing in Bel-OIT
Web tension, torque, and rider roll nip loading can all be biased +/- 30% in both LARS mode and Bel-OIT mode – while the winder is operating – by use of the Biasing screen in the Panel View on the benchboard.

Error Messages and Maintenance Messages
The Error Message and Maintenance Message systems provide automatic, on-screen warning message displays of error and maintenance conditions that require attention. The Error Message System comes pre-loaded with a list of error messages, and it provides system user's with the ability to describe new ones. It also provides a listing of current errors and a history of past errors on the current shift. Maintenance messages can be viewed, created, and edited; they are displayed on-screen by an on-line, "Maintenance Announcer" window, which automatically displays on-screen warning messages when a maintenance item needs immediate attention.

Running In Bel-OIT Mode

Bel-OIT mode is initiated by pressing the BEL-OIT MODE function key on the Panel View on the benchboard. Once active, Bel-OIT is operated, in combination with the procedures described in the *Bel-OIT User's Guide*, as follows:

⚠ WARNING

Moving winder components and rotating paper rolls can pinch, crush, or trap people, resulting in severe injury or death. Always make sure all personnel are out of the operating zone before starting to run the winder.

1. When all preparations have been completed (see "Threading The Winder" and "Starting the Winder") and the winder has been put into Bel-OIT mode with the BEL-OIT MODE function key on the Panel View, press the RUN button on the bench-board. The winder will start to run automatically according to the program and setpoints selected in "Starting the Winder". (For a general description of Bel-OIT mode, see "Bel-OIT Mode" and "Bel-OIT Mode Operation" in this manual; for details about use of the Bel-OIT system, see the *Bel-OIT User's Guide*.)

   The winder will now start to run according to the Bel-OIT program selected by the operator, and it will continue to wind the set until stopped by one of the stop-to values in the roll plan being run or by the operator's use of one of the Stop buttons (see "Stopping The Winder").

2. Make sure that proper tension is maintained. Use the tension control functions in the Panel View.

3. Make sure the slits are not running together; adjust the spreader if they are. (See "Spreader" section for details.)

4. When the set has been completed, remove it from the winder as described in "Removing Rolls: Set Changing" in this manual.

LARS MODE OPERATION

LARS (Lenox Auto Roll Structure) provides a selection of twenty roll plan programs, each of which is loaded with a different set of pre-programmed setpoints that define a roll plan program. LARS mode is initiated and LARS programs are selected on the Panel View. When operating in LARS mode, the winder runs automatically, according to the pre-selected roll-structure curves and setpoints (rider roll nip, drum torque, and web tension) contained in the program that has been selected. The sections that follow describe this process in greater detail.

Running In Lars Mode

LARS mode is initiated by pressing the LARS MODE function key on the Panel View on the benchboard. Once active, the LARS system is operated as follows:

1. When the winder is fully stopped and all prerequisites for running have been met (see "Starting the Winder"), initiate LARS mode by pressing the LARS MODE button on the Panel View on the Benchboard.

2. At the Panel View, enter the number of the desired LARS program. The program number is all that needs to be entered. All setpoint values are automatically pre-set by the LARS program.

Note: It is possible to have LARS programs altered and/or added to your LARS system. If such changes are required, please contact the BELOIT Lenox Winder Service Center.

⚠ WARNING

Moving winder components and rotating paper rolls can pinch, crush, or trap people, resulting in severe injury or death. Always make sure all personnel are out of the operating zone before starting to run the winder.

3. Press the RUN button on the benchboard.

The winder will now run in LARS mode until stopped by one of the stop-to values in the program or by the operator's use of one of the Stop buttons (see "Stopping The Winder")

4. Make sure that proper tension is maintained. Tension can be biased while the winder is running through use of the Tension biasing INCR and DECR functions in the Panel View.

5. Make sure the slits are not running together; adjust the spreader if they are.

6. When the set has been completed, remove it from the winder as described in "Removing Rolls: Set Changing".

USING THE PANEL VIEW

The Panel View is used to activate the Bel-OIT and LARS systems, to control a wide variety of basic winder functions, and to select, display, enter, and edit the setpoint values used by the LARS system.

There are eleven selections on the Main Menu: Machine Setup, Winder Control, Roll Structure Bias, Roll Structure Setup, Winder Drive Setup, Winder Running, Winder Calibration, Hydraulic system Status, Tension Feedback, and Rider Roll Control. Each of these selections are made by use of the function keys (F1 through F20) which are used to access the screens that are used to enter and edit LARS and Bel-OIT information.

The Panel View Keypad

The keypad is used to enter, edit and select LARS programs and program values. To do this, the keypad employs ten numeric keys, an "enter" key (the long left-arrow key), and a CANCEL key.

Note: Not all values displayed on the screens can be edited; some are for "viewing only". The values that can be edited are usually displayed in white. Refer to the instructions in the following pages to see which values can be edited on specific Panel View screens.

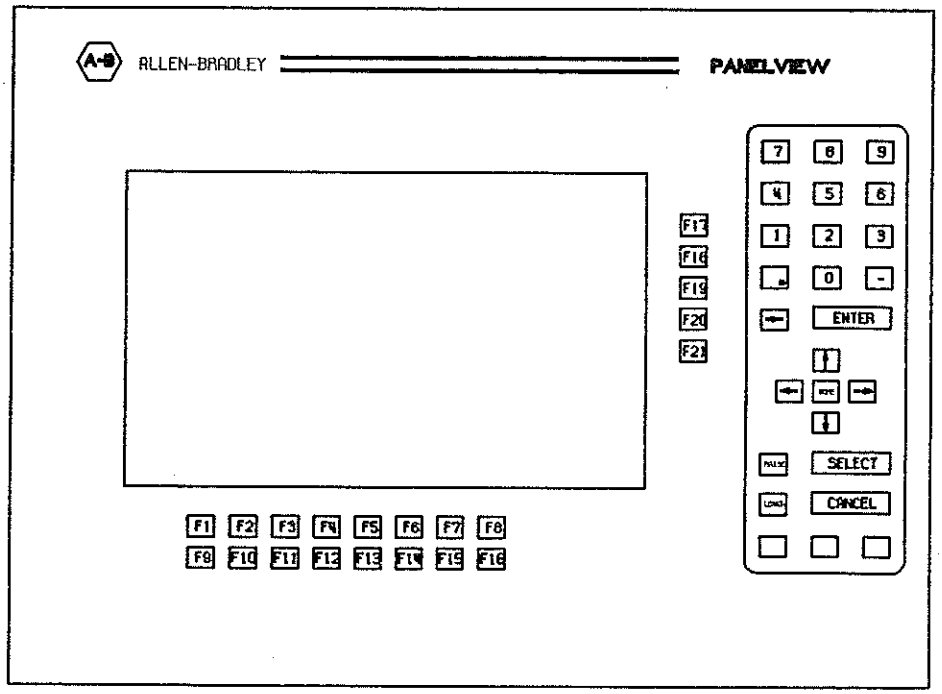

Editing Values With the Panel View Keypad

Use the following procedure to input and edit on-screen values with the Panel View keypad:

1. Press the function key of the function you want to edit. A data entry banner that will appear across the top of the screen prompting the user to enter a new value:

   Enter New Value or press CANCEL. NN.N

2. Type in the new value at the numeric keypad; it will appear in the data banner. If you want to correct the value, either press the keypad's backspace key to erase one digit at a time or press CANCEL to erase the whole entry, and then type in the corrected value.

3. Once you are satisfied with the value in the keypad display, press the keypad's ENTER key. If the new value is within the acceptable range of the system, the PLC will accept it and load it into memory. If the value is not acceptable, an error message will display in a banner at the bottom of the keypad, prompting you to press F8 and enter an acceptable value. If such an error message occurs, press F8 as prompted, and use the procedures just described to enter an acceptable value.

The Panel View Main Menu

The Main Menu is used to select the Panel View's data entry display screens.

```
                                                                  Press-F18
                                                                  TRIM
                                                                   BIAS
                                                                  CONTROL
                                                                  Press F19
                                                                  TENSION
                                                                   FEEDBACK
                                                                  Press F20
                                                                   ARR
                                                                  RIDER-ROLL
                                                                  CONTROL

                C2 WINDER--FRASER-PAPER-LTD.
                .. ........................

                  HH:MM:SS-PM

                  MM/DD/YY

Press F1   Press F2  Press F3  Press F4  Press F5  Press F6  Press F7  Press F8
 MACHINE    WINDER    ROLL     ROLL     WINDER    WINDER    WINDER   HYDRAULIC
 SETUP      CONTROL  STRUCTURE STRUCTURE DRIVE    RUNNING   CALIBRA-  SYSTEM
                      BIAS     SETUP    SETUP               TION      STATUS
```

Main Menu Selection Keys

The function keys are used to access the Panel View screens as listed below.

Function Key	Screen
F1	Machine Setup Screen
F2	Winder Control Screen
F3	Roll Structure Bias Screen
F4	Roll Structure Setup Screen
F5	Winder Drive Setup Screen
F6	Winder Running Screen.
F7	Winder Calibration Screen
F8	Hydraulic System Status Screen
F18	Trim Bias Control Screen
F19	Tension Feedback Screen
F20	Rider Roll Control Screen

Machine Setup Screen

The Machine Setup screen is a viewing-only screen that displays the maximum speed, tension range, maximum/minimum sheet width, rider roll hydraulic cylinder area and PSI/PLI ratings, maximum available torque, and calibration settings of the three tension load cells.

This screen is accessed by pressing the F1 key. To return to the Main Menu, press F16.

```
W·I·N·D·E·R·  ·M·A·C·H·I·N·E·  ·P·A·R·A·M·E·T·E·R·S·
.................................................

MAXIMUM SPEED = 7500 FPM                MAX. TORQUE FT-LBS = 700

TENSION RANGE = 1 - 4 PLI               LOAD CELL CALIBRATION:

MAXIMUM WIDTH = 208 INCHES
                                        LC-----B-----LC-----B-----LC
MIMIMUM WIDTH = 191 INCHES                 200    200     200    200

RIDER ROLL CYL. AREA = 6.8477 IN^2

RIDER ROLL CYL. PSI/PLI = 30

                                                        Press F16
                                                        [ MAIN ]
```

Winder Control Screen

The Machine Setup screen is used to select the mode of winder operation (LARS or Bel-OIT mode), to activate/deactivate web tension control, and to control unwind direction, oscillation, and unwind maneuver (payout/takeup) functions.

This screen is accessed by pressing the F2 key at the Main Menu. To return to the Main Menu, press F16.

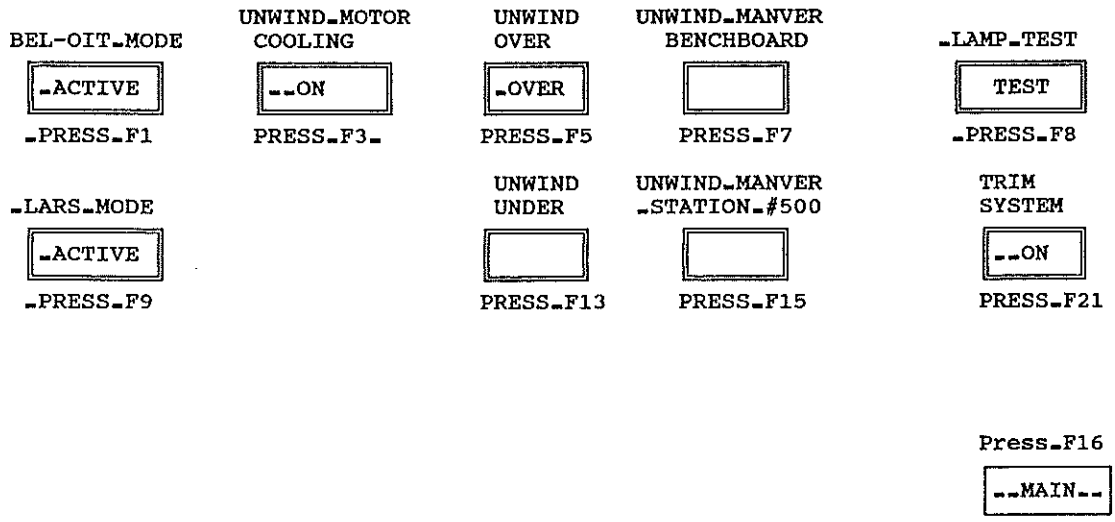

Function Keys on the Winder Control Screen

F1: BEL-OIT MODE	Used to activate Bel-OIT mode. This control toggles on/off with the LARS MODE function.
F9: LARS MODE	Used to activate LARS mode. This control toggles on/off with the Bel-OIT mode function.
F3: UNWIND MOTOR COOLING	Used to turn the unwind motor cooling blower on and off. This control will flash if the blower does not respond to the 'On' command.
F5: UNWIND OVER	Used to set the unwind to feed paper from the top of the parent roll. This control toggles on/off with the UNWIND UNDER function.
F13: UNWIND UNDER	Used to set the unwind to feed paper from the bottom of the parent roll. This control toggles on/off with the UNWIND OVER function.

Function Keys on the Winder Control Screen (continued)

F7: UNWIND MANVER BENCHBOARD	Used to select the payout/takeup potentiometer on the benchboard. This control toggles on/off with the UNWIND MANVER STATION 500 function.
F15: UNWIND MANVER STATION 500	Used to select the payout/takeup potentiometer on Unwind Control Panel 500. This control toggles on/off with the UNWIND MANVER STATION BENCHBOARD function.
F8: LAMP TEST	Used to test the lamps on all winder panels an control stations.
F21: TRIM SYSTEM	Toggle" style on/off function button that is used to turn slitter trim removal system on and off.
F16: MAIN	Used to return to the Main Menu.

Roll Structure Bias Screen

The Roll Structure Bias screen is used to adjust (bias) tension, rider roll load, and torque. The INCR and DECR functions on this screen are used raise and lower the setpoints, which are displayed graphically by the bar graphs and as text in the data fields.

This screen is accessed by pressing the F3 key at the Main Menu. To return to the Main Menu, press F17.

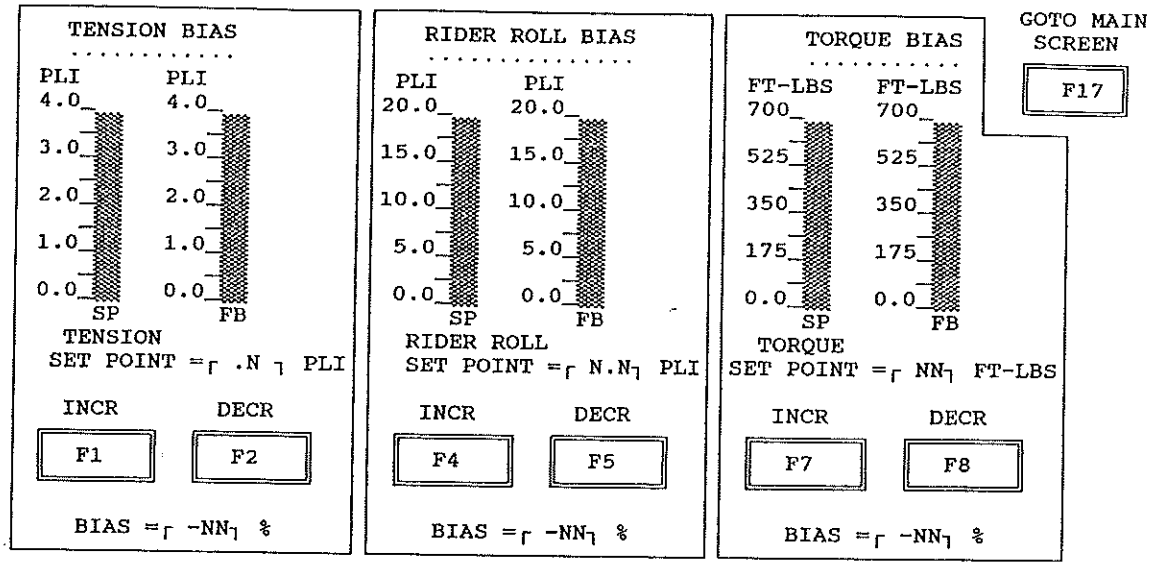

Roll Structure Bias Screen Display Values

The tension, torque, and rider roll loading setpoints, which, along with the current feedback for those functions, are displayed graphically on the TENSION BIAS, RIDER ROLL BIAS, and TORQUE BIAS graphs (SP = setpoint; FB = feed back). Those setpoints are also displayed as text in the fields below the graphs, e.g., TENSION SET POINT 3.7 PLI. The maximum setpoints are displayed above the graphs, e.g., TENSION BIAS 4.0 PLI 4.0 PLI, and the percentage of bias is displayed in the fields below the function buttons, e.g, BIAS = 3.0%. These fields display the current values in the system on an on-line basis.

Function Keys on The Roll Structure Bias Screen

The following function keys are used to bias tension, torque, and rider roll loading as follows:

F1 Used to *increase (bias) the tension setpoint*, as displayed in the "SP" column of the TENSION BIAS graph, to the unwind drive. This control allows for biasing of this setpoint by up to +30%.

F2 Used to *decrease (bias) the tension setpoint*, as displayed in the "SP" column of the TENSION BIAS graph, to the unwind drive. This control allows for the trimming of this setpoint by up to -30%.

Function Keys on The Roll Structure Bias Screen (continued)

F4 Used to *increase (bias) the rider roll loading pressure setpoint* to the Beloit air-over-oil valve, as displayed in the "SP" column of the RIDER ROLL BIAS graph. This control allows for biasing of this setpoint by up to +30%.

F5 Used to *decrease (bias) the rider roll loading pressure setpoint* to the Beloit air-over-oil valve, as displayed in the "SP" column of the RIDE ROLL BIAS graph. This control allows for the trimming of this setpoint by up to – 30%.

F7 Used to *increase (bias) the torque setpoint*, as displayed in the "SP" column of the TORQUE BIAS graph, to the winder drums. This control allows for the biasing of this setpoint by up to +30%.

F8 Used to *decrease (bias) the torque setpoint*, as displayed in the "SP" column of the TORQUE BIAS graph, to the winder drums. It allows for the trimming of this setpoint by up to -30%.

F17 Used to exit the current screen and return to the Main Menu.

Roll Structure Setup Screen

The Roll Structure Setup screen is used to enter the LARS program number and to input setpoint values for starting rider roll loading, shipping diameter, tension, starting torque, torque break diameter, and minimum torque diameter, which are displayed on a current, on-line basis in the data fields on the screen, e.g., RR LOAD = 5.0 PLI and TORQUE = 0 FT-LBS.
This screen is accessed by pressing the F4 key at the Main Menu. To return to the Main Menu, press F17.

```
                                                          PRESS-F17
                                                          [ MAIN ]

                C·U·R·R·E·N·T·-·S·E·T·P·O·I·N·T·S·
                ..................................

STARTING   SHIPPING                          TORQUE    MINIMUM   LARS
RIDER      ROLL      SHEET     STARTING      BREAK     TORQUE    PROGRAM
ROLL-LOAD  DIAMETER  TENSION   TORQUE        DIAMETER  DIAMETER  NUMBER

[-N.N]     [-N.N]    [-.N ]    [-NN]         [-N.N]    [-N.N]    [-N ]
 PLI       INCHES     PLI      FT-LBS        INCHES    INCHES

STARTING   SHIPPING                          TORQUE    MINIMUM   LARS
RIDER      ROLL-     SHEET     STARTING      BREAK     TORQUE    PROGRAM
ROLL-LOAD  DIAMETER  TENSION   TORQUE        DIAMETER  DIAMETER  NUMBER--

[--F1]     [--F2]    [--F3]    [--F4]        [--F5]    [--F6]    [--F7]
```

Function Keys on the Roll Structure Setup Screen

The function keys on this screen are used to enter and edit LARS roll structure setpoints. These buttons are available for use at all times when LARS mode is active, but only one of them can be activated at a time.

F1: STARTING RIDER ROLL LOAD	Used to activate the keypad for entry of the starting rider-roll-loading setpoint.
F2: SHIPPING ROLL DIAMETER	Used to activate the keypad for entry of the final roll diameter.
F3: SHEET TENSION	Used to activate the keypad for entry of web tension setpoint.
F4: STARTING TORQUE	Used to activate the keypad for entry of the starting torque setpoint. This value represents the front/back drum torque differential at core diameter in foot pounds.

Function Keys on the Roll Structure Setup Screen (continued)

F5: TORQUE BREAK DIAMETER	Used to activate the keypad for entry of the roll diameter at which the torque differential starts to be reduced.
F6: MINIMUM TORQUE DIAMETER	Used to activate the keypad for entry of the roll diameter at which the torque differential reaches to its lowest setting for the current roll set.
F7: LARS PROGRAM NUMBER	Used in combination with the keypad to enter LARS program numbers.
F17: MAIN SCREEN	Used to exit the current screen and return to the Main Screen.

Changing LARS Program Numbers

Use the following procedure to change the LARS program number:

1. Press the F7 key. The current program no. will appear in the LARS PROGRAM NUMBER field.

2. With the winder at zero (0) speed, type in the new program number at the Panel View's numeric keypad. The number typed in will appear in the display.

3. Press the keypad "ENTER" key. The new LARS program number will be entered into the system and will replace the previous number in the LARS PROGRAM NUMBER field.

Editing Roll Structure Setup Values at the Panel View Keypad

Use the following procedure to input and edit on-screen values with the Panel View keypad:

1. Press the function key of the function you want to edit. A data entry banner that will appear across the top of the screen prompting the user to enter a new value:

   Enter New Value or press CANCEL. NN.N

2. Type in the new value at the numeric keypad; it will appear in the data banner. If you want to correct the value, either press the keypad's backspace key to erase one digit at a time or press CANCEL to erase the whole entry, and then type in the corrected value.

3. Once you are satisfied with the value in the keypad display, press the keypad's ENTER key. If the new value is within the acceptable range of the system, the PLC will accept it and load it into memory. If the value is not acceptable, an error message will display in a banner at the bottom of the keypad, prompting you to press F8 and enter an acceptable value. If such an error message occurs, press F8 as prompted, and use the procedures just described to enter an acceptable value in the data entry banner.

Winder Drive Setup Screen

The Winder Drive Setup screen is used to enter the LARS stop-to values, paper data, and core outside diameter, which are displayed on a current, on-line basis in the data fields on the screen.

This screen is accessed by pressing the F5 key at the Main Menu. To return to the Main Menu, press F17.

```
                                                                    Press_F17
                                                                    [MAIN SCREEN]
C·U·R·R·E·N·T·_·S·E·T·P·O·I·N·T·S·
.................................

           STARTING                 SINGLE                STOP-TO    STOP-TO    STOP-TO
CORE       UNWIND     BASIS         SHEET                 UNWIND     REWIND     REWIND
DIAMETER   I.O.P.     WEIGHT        CALIPER               I.O.P.     DIAMETER   LENGTH

┌_.N ┐    ┌_N.N┐     ┌_N.N┐       ┌_N.N┐                ┌_N.N┐     ┌_N.N┐     _NNNN
INCHES     INCHES     #/3300        MILS.                 INCHES     INCHES     FT/10

           STARTING                 SINGLE                STOP-TO    STOP-TO    STOP-TO
CORE       UNWIND     BASIS         SHEET                 UNWIND     REWIND     REWIND
DIAMETER   I.O.P.     WEIGHT        CALIPER               I.O.P      DIAMETER   LENGTH
[F1]       [F2]       [F3]          [F4]                  [F6]       [F7]       [F8]
```

Function Keys on the Winder Drive Setup Screen

The function keys on this screen are used to enter and edit the stop-to values into the LARS system. These buttons are available for use at all times when LARS mode is active, but only one of them can be activated at a time. The screen display of the function currently active will be highlighted.

F1: CORE DIAMETER	Used to activate the keypad for entry of the core diameter.
F2: STARTING UNWIND IOP	Used to activate the keypad for entry of the starting inches of paper on the unwind.
F3: BASIS WEIGHT	Used to activate the keypad for display and entry of the basis weight of the paper being run.
F4: SINGLE SHEET CALIPER	Used to activate the keypad for display and entry of the caliper the paper being run.

F6: STOP TO UNWIND IOP	Used to activate the keypad for entry of the stop-to diameter, in inches, of paper on the unwind.
F7: STOP TO REWIND DIAM	Used to activate the keypad for entry of the stop-to diameter, in inches, of the roll set in the pocket.
F8: STOP TO REWIND LENGTH	Used to activate the keypad for entry of the rewind stop-to length.
F17: MAIN SCREEN	Used to exit the current screen and return to the Main Screen.

Editing Winder Drive Setup Values At The Keypad

Use the following procedure to input and edit on-screen values with the Panel View keypad:

1. Press the function key of the function you want to edit. A data entry banner that will appear across the top of the screen prompting the user to enter a new value:

   Enter New Value or press CANCEL. NN.N

2. Type in the new value at the numeric keypad; it will appear in the data banner. If you want to correct the value, either press the keypad's backspace key to erase one digit at a time or press CANCEL to erase the whole entry, and then type in the corrected value.

3. Once you are satisfied with the value in the keypad display, press the keypad's ENTER key. If the new value is within the acceptable range of the system, the PLC will accept it and load it into memory. If the value is not acceptable, an error message will display in a banner at the bottom of the keypad, prompting you to press F8 and enter an acceptable value. If such an error message occurs, press F8 as prompted, and use the procedures just described to enter an acceptable value in the data entry banner.

Winder Running Screen

The Winder Running screen is used to adjust speed settings and to display current tension, speed, torque, and rewind diameter values. This screen also includes a window used for selection of stopping-modes (the 'Select Desired Stop-To Mode' window) and the Running Status display, which displays the winder drive's current run-permissive status.

This screen is accessed by pressing the F6 key at the Main Menu. To return to the Main Menu, press F16.

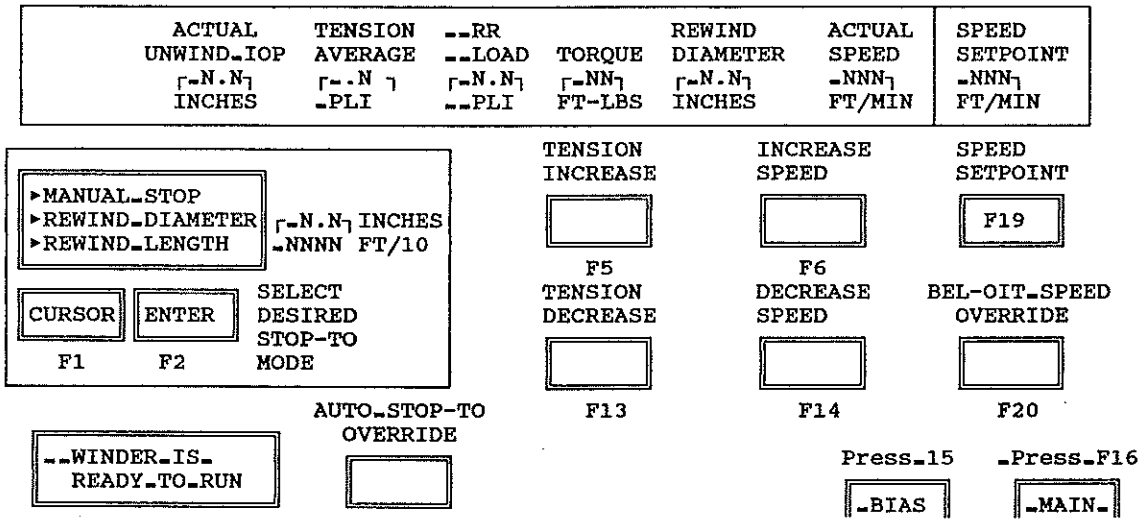

Winder Running Screen Data and Status Displays

At the top of this screen, current, on-line feedback is displayed for the following data fields: ACTUAL UNWIND IOP, TENSION AVERAGE, RR LOAD, TORQUE, REWIND DIAMETER, ACTUAL SPEED, and SPEED SETPOINT. A running status window, which displays the winder's current status (stopped, jogging, threading, running, or ready to run) is located at the lower left of the screen.

The tension display shows the current average tension of the three load cells (front, middle, and back). The RR LOAD display shows the current amount of loading of the rider roll. REWIND DIAMETER displays current diameter of the roll set in the pocket. ACTUAL SPEED displays the current actual speed of the winder. The eighth field in that group, SPEED SETPOINT, displays the current speed setpoint as entered with the SPEED SETPOINT function. Temporary modifications can be made to the current actual speed with the "ramp speed" and "increase/decrease function keys described below.

Function Keys on the Winder Running Screen

The function buttons on this screen are used to enter and edit data as follows:

F1: CURSOR	Used to make selections in the SELECT DESIRED STOP-TO MODE window.
F2: ENTER	Used to make selections in the SELECT DESIRED STOP-TO MODE window.
F3: AUTO STOP-TO OVERRIDE	Used during LARS and Bel-OIT operation to temporarily override the current stop to values. When this function is active, the winder will only stop when the operator presses a STOP button or the maximum roll diameter is reached.
F5: TENSION INCREASE	Used to increase the current sheet tension.
F13: TENSION DECREASE	Used to increase the current sheet tension.
F6: INCREASE SPEED	Used to increase the current speed of the winder.
F14: DECREASE SPEED	Used to decrease the current speed of the winder.
F19: SPEED SETPOINT	Used to activate the keypad for entry of the speed setpoint, which is the speed setting that the LARS system will use as its fixed, "pre-set" running speed during this set.
F20: BEL-OIT SPEED OVERRIDE	Used during Bel-OIT operation to temporarily override the Bel-OIT speed curve. When this function is active, winder speed can be controlled by the use of the Panel View controls.
F15: BIAS	Used to exit this screen and go to the Roll Structure Bias screen, which is used to bias tension, torque, and rider roll settings.
F16: MAIN	Used to exit this screen and return to the Main Menu.

The "SELECT DESIRED STOP-TO MODE" Window

The "Select Desired Stop-To Mode" window is used to display current stop-to values and to and select the mode for stopping the winder when operating in LARS mode: manually, stop-to inches of paper on the winder according to roll diameter, or stop-to sheet length in feet divided by 10. Selection is made in this window with the F1 CURSOR and F2 ENTER function keys.

Note: This window is not active in Bel-OIT mode.

MANUAL STOP	Selection of this function cancels all auto-stops; the winder will run until maximum diameter is reached or a manual stop is made by the operator.
REWIND DIAM	Selection of this function will set the winder to stop at the value displayed. The value displayed is the one that was set on the Winder Drive Set Up Screen.
REWIND LENGTH	Selection of this function will set the winder to stop at the value displayed. The value displayed is the one that was set on the Winder Drive Set Up Screen.

Running-Status Display

Running Status Display, which is located at the lower left of this screen, displays the winder drive's current running status. There are five possible messages, as follows:

WINDER IS READY TO RUN
WINDER IS IN RUN MODE
WINDER IS STOPPING
WINDER IS STOPPED
WINDER IS IN THREAD
WINDER IS IN JOG

Calibration Screen

The Calibration screen is used to calibrate the rider roll load valve. This is not an operator screen – a password is required to call this screen to the display – and it should only be used by BELOIT Lenox personnel or authorized mill personnel with full BELOIT Lenox training.
This screen is accessed by pressing the F7 key at the Main Menu. To return to the Main Menu, press F16.

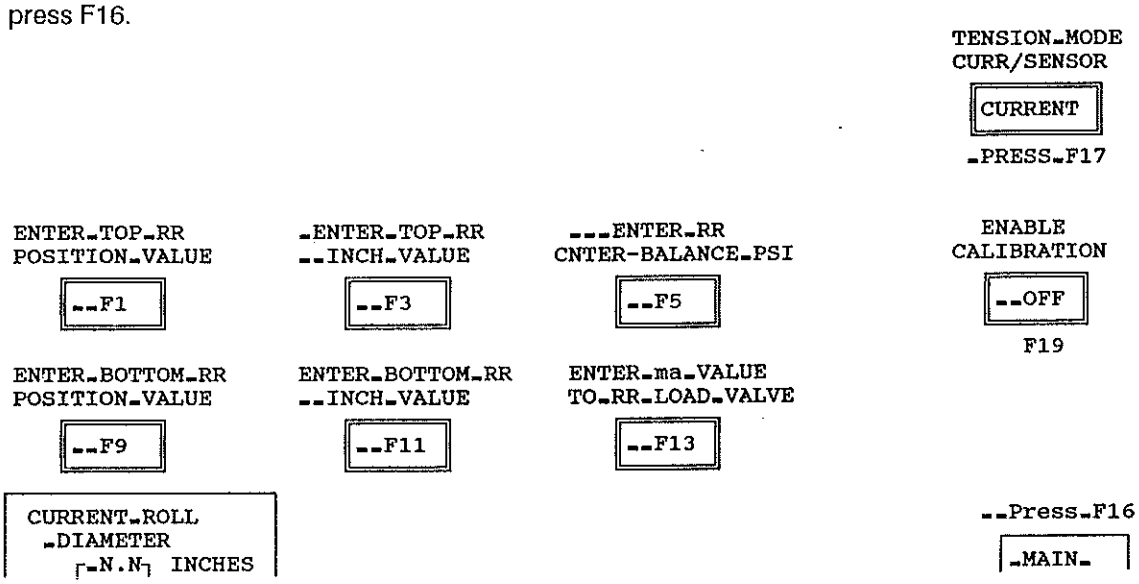

– NOTICE –

The calibration screen is not used during regular operation. It is for use by authorized setup personnel only. Use of this screen can cause changes in rider roll calibration. It should not be used as a part of regular winding operation. Calibration is performed during start-up by Beloit Lenox personnel. If conditions require re-calibration at some later date, that procedure should only be performed by authorized, BELOIT Lenox trained personnel.

Hydraulic System Screen

The Hydraulic System Status screen is a viewing-only screen that displays the current operating status of hydraulic system components. The viewing boxes below each of the functions display the current condition for that function. For example, the HYDRAULIC OIL TEMPERATURE will ordinarily display the message *TEMP NORMAL*, but if the temperature were to exceed the permissible upper limit, this control would flash and "Temp High" would be displayed instead. In like manner, HYDRAULIC OIL LEVEL and HYDRAULIC OIL PRESSURE would flash *LEVEL LOW* and *PRESSURE LOW* messages if those conditions were to occur. HYDRAULIC PRESSURE FILTER, HYDRAULIC RECIRC FILTER, and HYDRAULIC TANK FILTER would display a *FILTER CLOGGED* message if that should occur.

This screen is accessed by pressing the F8 key at the Main Menu. To return to the Main Menu, press F16.

H·Y·D·R·A·U·L·I·C· ·S·Y·S·T·E·M· ·S·T·A·T·U·S·

HYDRAULIC OIL TEMPERATURE	HYDRAULIC OIL LEVEL	HYDRAULIC OIL PRESSURE	HYDRAULIC PRESSURE FILTER	HYDRAULIC RECIRC. FILTER	HYDRAULIC TANK FILTER
TEMP NORMAL	LEVEL NORMAL	PRESSUR NORMAL	FILTER NORMAL	FILTER NORMAL	FILTER NORMAL

Press F16

MAIN

Tension Feedback Screen

The Tension Feedback screen displays the following tension information: tension setpoint of the LARS program currently being used (SETPOINT); on-line display of the actual tension at the three load cells (FRONT FEEDBACK, MIDDLE FEEDBACK, and BACK FEEDBACK); and on-line display of the average feedback level of the three load cells (AVERAGE FEEDBACK).

Note: This is a viewing-only screen. To control the tension system and to make changes in the tension level see the Machine Setup screen and the Roll Structure Bias screen.

This screen is accessed by pressing F19 on the Main Menu. To return to the Main Menu, press the F17 key.

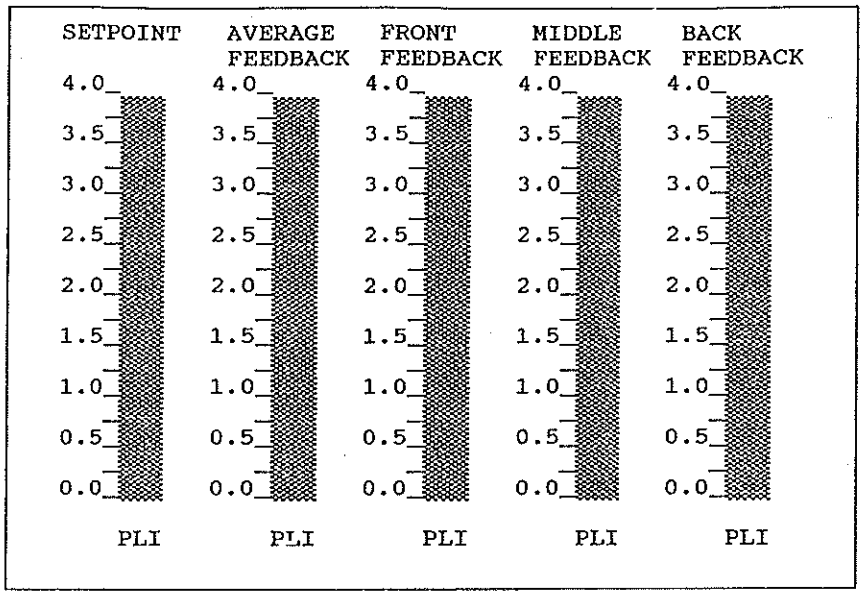

Articulating Rider Roll Control Screen

The Articulating Rider Roll Control screen is used to initialize the rider roll and to set it for articulating or non-articulating operation.

This screen is accessed by pressing F19 on the Main Menu. To return to the Main Menu, press the F17 key.

– NOTICE –

Do not use the function keys on this screen without a full knowledge of Articulating Rider Roll operation. See the "Articulating Rider Roll" section in this manual.

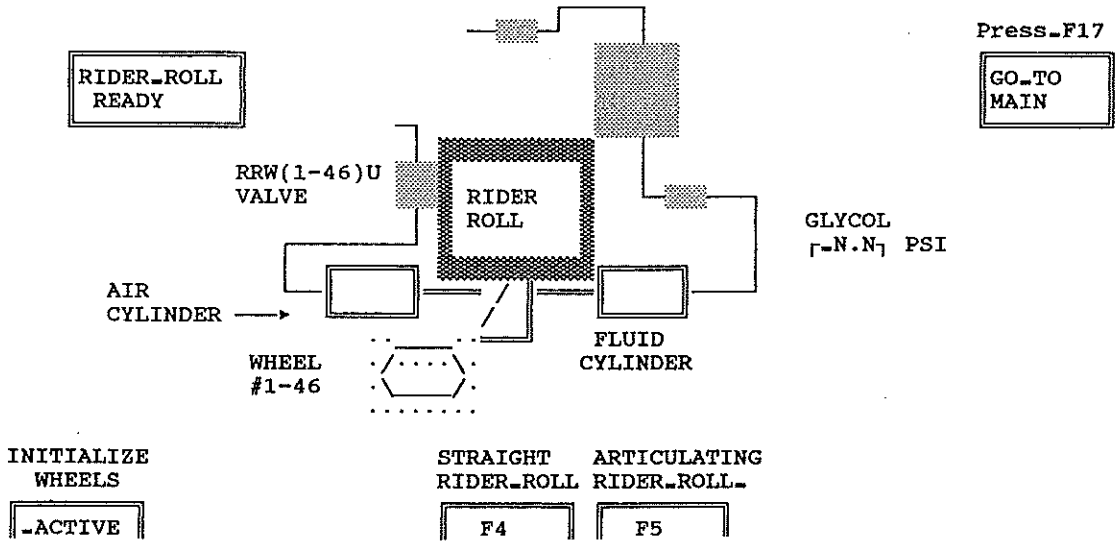

Function Keys on the Articulating Rider Roll Screen

F1: INITIALIZE WHEELS	Used to set the rider roll for operation after a new trim plan has been selected or if a wheel change has been made (see the "Articulating Rider Roll" section in this manual.
F4: STRAIGHT RIDER ROLL	Used to initiate non-articulating operation.
F5: ARTICULATING RIDER ROLL	Used to initiate articulating operation.
F17:	Used to exit this screen and return to the Main Menu.

Trim Blower Biasing Screen

The Trim Blower Biasing Screen is used to increase or decrease the speed of the blower in the trim removal system +/– 10%.

This screen is accessed by pressing F18 on the Main Menu. To return to the Main Menu, press F17.

```
                                                  RETURN_TO
                                                  MAIN_SCREEN
                                                  [__F17]

THE_TRIM_BLOWER_SPEED_CAN_BE
INCRESED_OR_DECRESED_UP_TO_10%

        CURRENT_TRIM
        BLOWER_BIAS

          r--NN7 %

TRIM_BLOWER      TRIM_BLOWER
 __SPEED            SPEED
[INCREASE]       [DECREASE]
    F1               F3
```

Function Keys on the Trim Blower Biasing Screen

INCREASE F1:	Pressing F1 will increase trim blower speed by an increment of 1% each time it is pressed.
DECREASE F3	Pressing F1 will decrease trim blower speed by an increment of 1% each time it is pressed.
F17:	Used to exit this screen and return to the Main Menu.

STOPPING THE WINDER

There are four ways to stop the winder: MANUAL STOP, AUTOMATIC STOP, EMERGENCY-STOP, and COAST STOP.

Manual Stop

Manual Stop is effected by pressing the STOP button on the Winder Frame Control Panel - Operator's Side or the benchboard. During normal operation, a 'Manual Stop' can be used to bring the winder to a controlled stop when the operator observes the roll approaching the finished diameter. After the button is pressed, the winder decelerates to a controlled stop, maintaining the decel rate, sheet tension level, etc, that were preset in the set's parameters.

Automatic Stop

Automatic Stop is a controlled form of stopping that is invoked automatically by the drive when pre-set roll size diameter or length have been reached during winding. When invoked, "Automatic Stop" brings the winder to a controlled stop.

Emergency-Stop

Emergency–Stop is used to bring the winder to its fastest stop for most emergencies and sheet breaks. E–STOP buttons are located on the Benchboard and all of the winder's control panels. When E-STOP is pressed, the drive decelerates the machine at its maximum amperage rating. The sheet may or may not break as a result of using E-Stop, depending on the roll size in the unwind and other variables, but conditions requiring an emergency stop are likely to cause rethreading and splicing to be considered of relatively minor consequence.

Note: After E-STOP has been used, the RESET button must be pressed and all E-STOP buttons must be up before the winder can be restarted.

Coast Stop

Coast Stop, which is initiated by use of the COAST STOP button, is a specialized form of emergency stop that brings the winder to a gradual, non-powered, "coasting" stop by disconnecting power to the main drive and deactivating all drive controls. When COAST STOP is used, the pneumatic unwind brake automatically applies braking to prevent uncontrolled payout of the parent roll.

Because use of COAST STOP makes it impossible to make any further use of the winder controls, it should be used only in emergencies, such as fire (actual or potential), when it is imperative that all power and electrical circuits in the winder must be disconnected.

Note: When COAST STOP is used, the machine may continue running for a considerable amount of time because of the built up inertial forces within the system. After COAST STOP has been used, the coast-stop reset button (see drive manufacturer documentation) will have to be pressed before the winder can be restarted.

REMOVING ROLLS: SET CHANGING

Set changing includes two major operations: removal of the completed roll set and preparation of the new set. Removal can be assisted with the AUTO EJECT function or it can be done manually. The interlocks, designed to prevent injuries and damage to equipment, require that roll removal operations be controlled from the Winder Frame Panel 700 as described in the following procedures.

⚠ WARNING

Moving winder components and rotating paper rolls can pinch, crush, or trap people, resulting in severe injury or death. Always make sure all personnel are out of the operating zone before removing rolls from the winder.

Manual Set Changing

Use the following procedure when changing rewound roll sets manually.

Removing the Completed Roll Set

Steps 1 through 10 describe the first part of the procedure: removing the rolls. The procedure for preparing the new set is described in steps 11 through 17.

– NOTICE –

The procedure that follows is performed when the following conditions exist: the winder has come to a compete stop, no E Stop conditions exist, the rewound roll set is in the pocket, and the web is still attached to the roll set.

1. Fully raise the rider roll. Use the RIDER ROLL LOWER/RAISE selector switch. The rider roll safety latch will engage automatically and the RIDER ROLL LATCHED indicator will light up when the rider roll reaches its fully raised position.

2. Unchuck from the cores. Use the CORES CHUCKS CHUCK/UNCHUCK selector.

3. Fully raise the coreslides. Use the CORE SLIDES LOWER/RAISE selector.

4. Engage the sheet holder. Turn the DRUM SHT. HLDR OFF/ON selector to 'On'.

5. Lower the cradle to its fully lowered position in order to provide access to the pocket. Turn the CRADLE RAISE/LOWER selector to 'Lower' and hold it until the cradle is fully lowered.

6. Sever the sheet and tape the tails to the rolls.

7. Return the cradle to its fully raised position. Use the CRADLE RAISE/LOWER selector.

Manual Set Changing(continued)

8. Eject the roll-set from the winding pocket to the raised cradle by holding the ROLL EJECTOR RETURN/EJECT selector in 'Eject' position.

   Note: The ejector and the cradle are designed to be moved together during ejection. Once the roll has passed over the front drum, however, the ROLL EJECTOR RETURN/EJECT selector can be used to return the ejector to its "return" position.

9. Use the CRADLE RAISE/LOWER selector to lower the cradle and discharge the rolls.

   Note: The cradle will normally remain lowered until all core preparation has been completed and the next cycle is ready to start.

10. If the ejector was not returned in step 8, do so now by holding the ROLL EJECTOR RETURN/EJECT selector in 'Return' position. The ejector will move to its return position.

At this point, the old set has been discharged and the following conditions for starting the next set exist: the winding pocket is empty and ready to receive new cores; the web from the slitter section is held against the rear drum by the sheet holder with the web's leading edge ready to be attached to the cores; the cradle is still in its fully lowered position, providing access to the winding pocket to load and tape the new set of cores.

Preparing the New Roll Set

Steps 1 through 10 described removal of the completed roll sets. Steps 11 through 17 describe the procedure for preparing the new set.

11. Load new cores into the pocket.

12. Lower the core slides. Use the CORE SLIDES LOWER/RAISE selector.

13. Chuck up the cores. Use the CORES CHUCKS CHUCK/UNCHUCK selector.

14. Attach the leading edge of the web to the cores.

15. Lower the rider roll until it starts to "soft load" on the cores. Use the RIDER ROLL LOWER/RAISE selector switch..

16. Disengage the drum sheet holder. Turn the DRUM SHT. HLDR OFF/ON selector to 'Off'.

17. Raise the cradle to its fully raised position. Hold the CRADLE RAISE/LOWER selector in its 'Raise' position until the cradle reaches its fully raised position.

At this point the set change has been completed. To start up the winder for the next roll set, see "Starting the Winder" in this manual.

Set Changing With Auto Eject

Use the following procedure when set changing with Auto Eject.

⚠ WARNING

Moving winder components and rotating paper rolls can pinch, crush, or trap people, resulting in severe injury or death. Always make sure all personnel are out of the operating zone before removing rolls from the winder.

Removing the Completed Roll Set

Steps 1 through 6 describe the first part of the procedure: removing the rolls with Auto Eject. The procedure for preparing the new set is described in steps 7 through 13.

– NOTICE –

The procedure that follows is performed when the following conditions exist: the winder has come to a compete stop, no E Stop conditions exist, the rewound roll set is in the pocket, and the web is still attached to the roll set.

1. Lower the cradle to its fully lowered position in order to provide access to the pocket. Hold the CRADLE RAISE/LOWER selector in its 'Lower' position until the cradle is fully lowered.

2. Engage the sheet holder by turning the DRUM SHT. HLDR OFF/ON selector to 'On'.

3. Sever the sheet and tape the tails to the rolls.

4. Return the cradle to its fully raised position. Use the CRADLE RAISE/LOWER selector.

5. Press the AUTO EJECT button. The winder will perform the automatic eject cycle as follows: the rider roll will raise, the core chucks will unchuck and raise, and the roll ejector will push the roll set into the cradle (which is in its fully raised position) and the ejector, roll set, and cradle will then move together, as a unit, in discharge direction.

   The roll set and cradle will continue to move in discharge direction until they come to rest at a pre-set "hold" position slightly above the fully lowered position, but the ejector will reverse its direction and start moving toward its "returned" position.

6. With the cradle in "hold" position, make sure that all personnel are clear of the discharge area and use the CRADLE RAISE/LOWER selector to lower the cradle and discharge the rolls.

   Note: The cradle will normally remain lowered until all core preparation has been competed and the next cycle is ready to start.

Set Changing With Auto Eject (continued)

At this point, the old set has been discharged and the following conditions for starting the next set exist: the winding pocket is empty and ready to receive new cores; the web from the slitter section is held against the rear drum by the sheet holder with the leading edge ready to be attached to the cores; the cradle is still in its fully lowered position, providing access to the winding pocket to load and tape the cores.

Preparing the New Roll Set

Steps 1 through 7 described removal of the completed roll sets. Steps 7 through 13 describe the procedure for preparing the new set.

7. Load new cores into the pocket.

8. Lower the core slides. Use the CORE SLIDES LOWER/RAISE selector.

9. Chuck up the cores. Use the CORE CHUCKS CHUCK/UNCHUCK selector.

10. Attach the leading edge of the web to the cores.

11. Lower the rider roll until it starts to "soft load" on the cores. Use the RIDER ROLL LOWER/RAISE selector.

12. Disengage the sheet holder by turning the DRUM SHT. HLDR OFF/ON selector to 'Off'.

13. Raise the cradle to its fully raised position. Hold the CRADLE RAISE/LOWER selector in its 'Raise' position until the cradle reaches its fully raised position.

At this point the set change has been completed. To start up the winder for the next roll set, see "Starting the Winder" in this manual.

WEB SPLICING

Splices can be made at two places: in the winder, or at the unwind stand. The best location to use in any particular instance is determined by the conditions that make the splice necessary. Some examples are as follows:

- If the sheet breaks for some reason during the winding cycle, the splice will have to be made at the winder.

- If there is a partially rewound roll in the winder when the parent roll expires (or if there is an existing splice in the parent roll) and the winder can be stopped before the tail is pulled into the winder, the splice can be made at the unwind. This will often prove to be faster than making the splice at the winder, and it also makes it possible for the splice and the new sheet to be trimmed as they are fed through the slitters.)

In either case, the splice must be made without creating wrinkles in the sheet or offsets in the roll, which may require some practice to achieve the desired results.

Splicing at the Unwind

Use the following procedure to splice at the Unwind (see Trailing Edge and Leading Edge splicing illustrations).

⚠ WARNING

Rotating paper rolls and unexpected movement of winder components caused by accidental startup of the equipment can pinch, crush, or trap people. Before splicing is started, the winder must be stopped, and all personnel in the area must be alerted that someone is working in the winder's operating zone. Tags should be placed on the controls to warn against accidental startup.

Trailing Edge Splice

1. While the winder is running, be aware of the upcoming splice or the end of the roll. Bring the winder to a stop far enough before the splice location in order to leave sufficient web to make the splice.

2. With the winder stopped, turn off the tension.

3. For parent rolls that pay out from the top of the roll use the following procedure: separate the web from the roll at or near the bottom of the roll and slab off enough paper to get past the splice. If the parent roll is nearly spent, separate the web from the spool, remove the spool, and replace it with a new parent roll.

4. Prepare a new leading edge on the parent roll by applying double sided tape across the face of the roll, leaving the protective covering on the tape. Then crease and tear off the paper, leaving a clean, taped leading edge. Splices can be made straight across the roll, parallel to its centerline; however, a splice made diagonally at approximately 15° is desirable if the paper is to be used in processes such as continuous run printing.

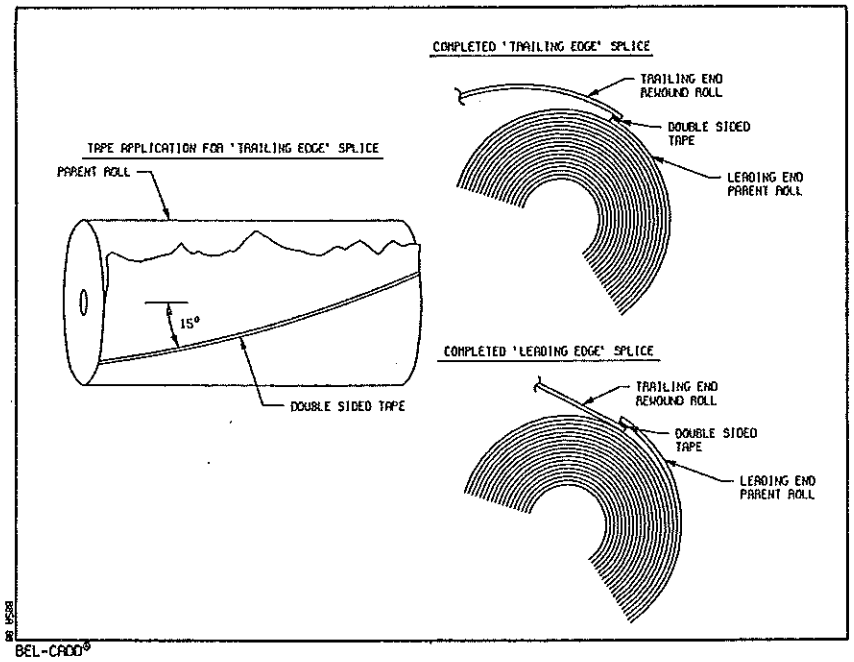

5. Make sure the new leading edge is tight against the roll. Work as near the top of the roll as is practical. Remove the protective covering from the tape.

6. Bring the tail of the rewound roll over the top of the parent roll. Make sure the sheet is straight and press it against the exposed tape on the parent roll. Crease and tear off the paper between the tape and the end of the tail.

7. Remove any excess tape that may extend beyond the ends of the roll and proceed to wind.

Leading Edge Splice

A "leading edge" splice is done by substituting the following steps in the "Trailing Edge Procedure":

4. With the new leading edge of the parent roll out of the way, but long enough to reach the top of the roll, lay the tail of the rewound roll over the top of the parent roll. Prepare the new trailing edge by applying double sided tape as described above. Crease and tear off the excess paper between the tape and the end of the sheet. Remove the tape's protective covering.

5. Pull the taped sheet until it is taut and straight with the machine. Bring the leading edge of the parent roll around the roll and over the taped tail. The sheet must be straight and tight to the roll before it is pressed against the tape.

6. Crease and tear off the excess paper between the splice and the leading edge.
   As noted above, this procedure applies to parent rolls that pay out from the top of the roll. The splicing technique for rolls that pay out from the bottom is essentially the same.

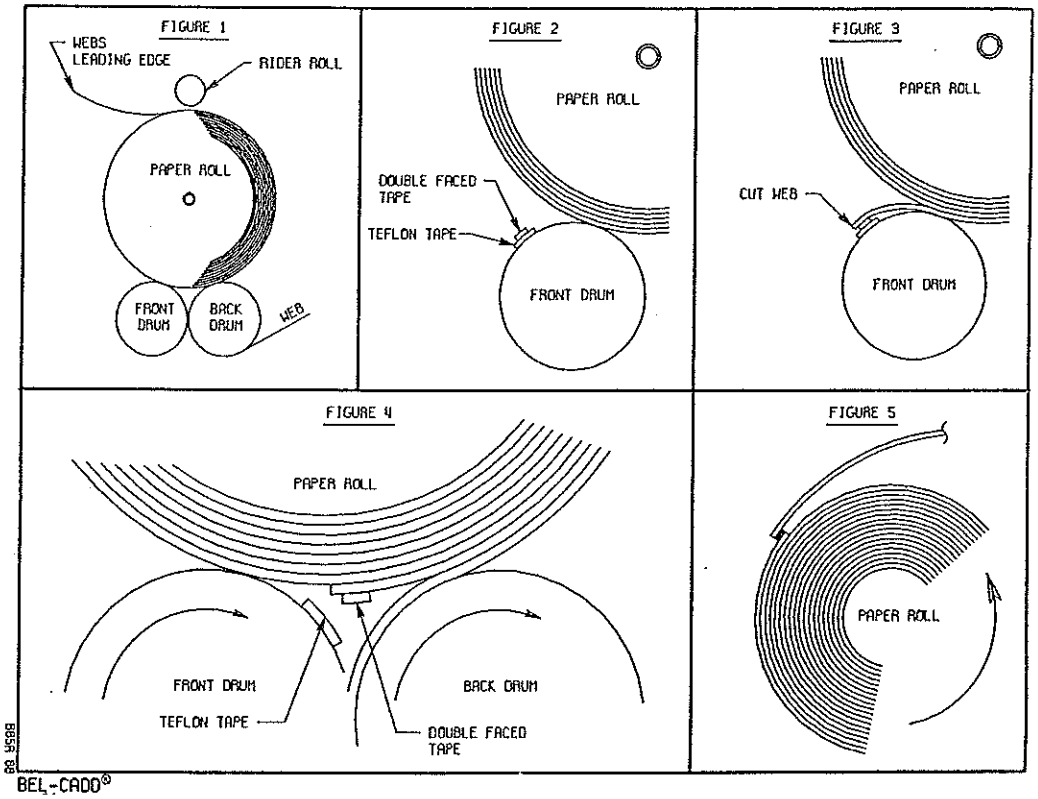

Splicing At The Winder: Basic Method

Use the following procedures to make splices at the winder (see splicing Figures 1 through 5). Refer to "Splicing at the Winder With Large Rolls in the Pocket" if such a condition exists when the splice is required.

⚠ WARNING

Rotating paper rolls and unexpected movement of winder components caused by accidental startup of the equipment can pinch, crush, or trap people. Before splicing is started, the winder must be stopped, and all personnel in the area must be alerted that someone is working in the winder's operating zone. Tags should be placed on the controls to warn against accidental startup. No one can be permitted into the slitter area until the slitters have been disabled and locked out.

1. With the rider roll up, prepare the leading edge of the web and rethread as shown in Figure 1. Lower the rider roll. The rethreaded sheet must be aligned on the paper roll. Temporarily tape the tail of the paper roll up out of the way.

Splicing At The Winder: Basic Method (continued)

2. Apply a length of teflon type adhesive tape across the full width of the front winder drum. A helix arrangement of the tape (approx. 15°) is preferable to attaching it straight across. This tape can remain in place for future splicing operations. The durability of the tape will depend on the kind of tape used; e.g., Scotch #549 will normally remain useful for several months, whereas the less expensive #254 will have a substantially shorter life.

3. Attach a full width length of double faced adhesive tape, such as Scotch #405, to the teflon tape and remove its protective backing. See Figure 2.

4. Lay the paper roll's tail over the front drum, align carefully, and press it to the exposed side of the double faced tape. Sever the web as shown in Figure 3.

5. Run the winder at thread speed. As the drums rotate, the web and the tape attached to it will pull free of the teflon tape on the front drum. As rotation continues, the open side of the double faced tape will become attached to the incoming web wrapping the back drum. See Figure 4.

6. Continued rotation will bring the splice to the front of the paper roll. The loose web is then creased and torn from the roll, and the splice is complete, as shown in Figure 5.

Splicing at the Winder With Large Rolls in the Pocket

This procedure provides instructions for rethreading & splicing the sheet at the winder after a sheet break. When a sheet break occurs late in the winding cycle, large diameter of the rolls in the pocket increase the difficulty of making the splice at the winder. Although the "air assist showers" usually supplied with BELOIT Lenox winders are adequate under most conditions for small diameter rolls, they may lack sufficient force to lift and hold the sheet over large diameter rolls. Heavy grades of paper may cause a similar problem. In such instances, a combination of teflon tape and double sided tape can be used to hold the leading edge of the sheet against the roll set to facilitate splicing. The procedure that follows includes a description of this method.

Note: Use of this procedure requires that the drums have been prepared with teflon tape as described in "Preparing the Drums With Teflon Tape" in this bulletin.

⚠ WARNING

Moving winder components and rotating paper rolls can pinch, crush, or trap people, resulting in severe injury or death. The winder must be brought to a full stop before the following operations are performed. Always make sure all personnel are out of the operating zone before operating components or starting to run the winder.

1. With the winder at a full stop, lower the cradle. Use the CRADLE LOWER/RAISE selector.

2. Raise the rider roll. Use the RIDER ROLL RAISE/LOWER selector.

3. Press the EMERGENCY STOP button.

4. Remove all broke from the winder section.

5. When all broke has been removed from the winder section, reset the E-STOP button.

At this point, the rethreading part of the procedure is started.

6. Slab off paper from roll set and parent roll.

7. Cut or tear the leading edges of the unwind sheet diagonally so that it tapers to an 18" wide leading edge opposite the sheet threader.

8. Disengage the slitters by using the inner slitter and trim slitter 'Engage/Disengage' controls. If repositioning of the slitters is necessary, do so only after observing the following warning:

⚠ WARNING

Slitter knife edges can cut or sever hands and fingers. If inspection, blade changing, or manual relocation of slitters is necessary, the slitters must be disabled by turning the SLITTERS DISABLE/OPERATE key-switch to its 'Disable' position before anyone enters the slitter area. Do not attempt to handle slitters while the blades are turning.

9. At the Panel View on the Benchboard (see "Using the Panel View" in this manual), perform the following:

   a. Set the winder speed to zero (0).

   b. Turn off tension.

10. Make certain that the roll ejector is fully retracted; if necessary, use the ROLL EJECTOR EJECT/RETURN selector on Winder Frame Panel 700.

11. Enter "threading mode" by using the following procedure:

   a. At Winder Frame Panel 700, turn the SHEET THREADER OFF/ON selector to 'On'.

   b. For winders so equipped, turn on the vacuum drum with the VACUUM DRUM ON/AUTO/OFF selector switch. Note: If this switch is set at 'Auto' the drum vacuum will automatically activate at this point.

   c. Still at Panel 700, press the THREAD button. The winder will start to run at the preset thread speed.

   d. At the benchboard, use the PAYOUT/TAKEUP potentiometer to set the desired payout speed.

12. Thread the sheet, using the following procedure:

   a. Engage the Lead-in Threader with the LEAD-IN SHT THRDR ENG/DIS selector. If the winder is equipped with splicing air showers, turn them on now.

b. Feed the sheet into the nip formed between the lead-in roll and the lead-in threader wheels. The sheet will be pulled over the before-slitter sectional roll and propelled through the disengaged slitters (see step 9).

c. Next, feed the sheet into the nip formed between the after slitter sectional roll and the after-slitter threader roll (if so equipped), past the spreader, and into the drum sheet threader.

d. Before the diagonally-cut leading edge of the tail widens out completely in the slitter section, start the slitter motors by pressing the SLITTER MOTORS pushbutton on the benchboard.

e. Engage the trim slitters; use TRIM SLITTERS button on the benchboard.

13. Stop thread speed operation when the leading edge of the sheet reaches the drum sheet threader.

At this point, the taping operation is started.

⚠ WARNING

The ingoing nip between the drums and rotating paper rolls can pinch, crush, or trap people, resulting in severe injury or death. The winder must be brought to a full stop before the following taping operations are started. Make sure all personnel are clear of nip points before jogging the drums.

14. At the front of the winder, place a 2" by 36" strip of double-sided tape around the circumference of the paper roll in line with the teflon tape on the drums (see "Preparing the Drums With Teflon Tape" section of this bulletin).

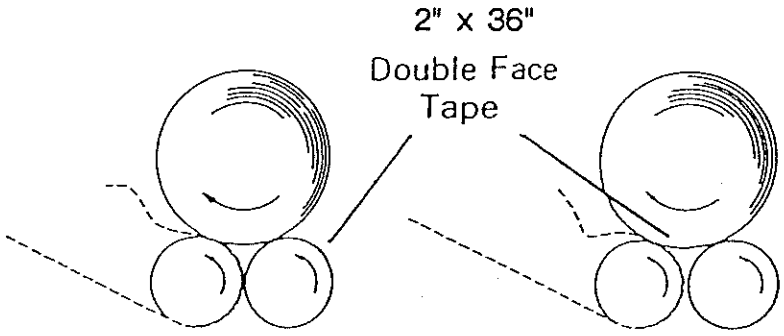

Splicing at the Winder With Large Rolls in the Pocket (continued)

15. Remove the protective layer of the double-sided tape, leaving the adhesive exposed.

16. Using the JOG button, rotate the drums so that the exposed adhesive of the double-sided tape on the drum picks up the paper tail of the roll set. As the double sided tape comes into contact with the roll set, the exposed surface of the tape will adhere to the paper surface of the roll set, and the side facing the teflon will pull free.

17. Continue to jog the drums until the full width of the sheet is in contact with the roll set.

    Note: Make sure that the edges of the sheet line up exactly with the edges of the paper on the roll.

18. Lower the rider roll. Use the RIDER ROLL RAISE/LOWER selector on Winder Panel 700.

19. Engage the inner slitters. Use the INNER SLITTERS button on Winder Panel 700.

20. Jog the sheet until the slits reach the drum pocket.

21. Press the STOP pushbutton.

22. Raise the rider roll. Use the RIDER ROLL RAISE/LOWER selector on Winder Panel 700.

23. Slab off excess paper until only good paper on roll is exposed.

24. With the rider roll still raised, JOG the drums until the leading edge of the web reaches the position shown in Figure 1 in the Five Part Illustration in "Splicing at the Winder". Make certain that the rethreaded sheet is aligned properly on the paper roll.

At this point, use the taping procedure described in "Splicing at the Winder: Basic Splice".

Preparing the Drums With Teflon Tape

This section contains the teflon drum taping procedure that is used to prepare the drums for splicing with the method described in "Splicing At The Winder After a Sheet Break". Once installed, the teflon tape can be allowed to remain on the drums. Durability of the tape will depend on the grade used. For example, Scotch #5491 will normally remain usable for several months, but #254 tape will have a substantially shorter life.

– NOTICE –

This procedure should only be performed by qualified maintenance personal. Any activation/deactivation of pneumatic lines must be performed according to the specifications of the pneumatic schematics and equipment documentation. The drum pocket must be empty, the drive must be turned off, and the winder must be fully locked out before this procedure is started.

Use the following procedure to apply teflon tape to the drums:

1. With the drum pocket empty, power to the drive turned off, and the winder fully locked out, make sure the DRUM BRAKES AUTO/OFF selector on Operator Panel 760 is at its 'Off' position and the brakes are disengaged.

2. At a point in line with the center of the sheet threader, apply a 3" wide strip of teflon tape around the full circumference of the back drum. This can be accomplished by pushing (rotating) the drum *away* from the pocket by hand as the tape is applied. (See Illustration.)

⚠ CAUTION

The inertia of rotating drums, even when rotated by hand, can pinch and crush fingers and hands. Make certain that fingers and clothing are clear of the nip points at the winding pocket and front drum guard when performing this procedure.

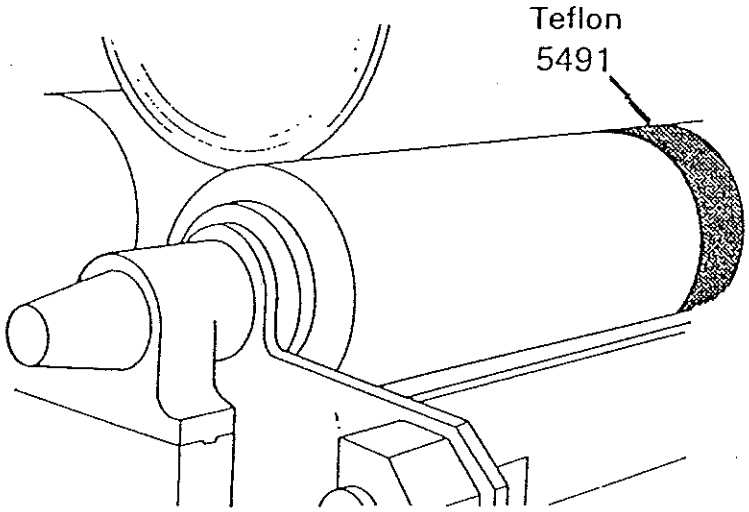

Preparing the Drums With Teflon Tape (continued)

3. When taping of the back drum has been completed, apply a similar 3" wide strip of teflon tape to the front drum, but this time do so by pushing the drum *toward* the pocket. Make certain that the tape being applied to this drum (the front drum) is in line with the tape on the back drum.

4. When teflon taping has been completed, engage the drum brakes with the DRUM BRAKE AUTO/OFF selector..

– NOTICE –

Activation/deactivation of pneumatic lines must only be performed by qualified maintenance personnel according to the specifications of the pneumatic schematics and equipment documentation. Be certain that all pressure settings are set according to those reference materials.

INTERLOCKS

The following interlocks have been designed into the control logic of the winder in order to prevent injuries to personnel and damage to the machine.

- The rider roll cannot be raised while the winder is running.
- Core chucks cannot be unchucked while the winder is running.
- The cradle cannot be lowered while winder is running.
- The roll ejector is inoperable while the winder is running.
- The sheet threaders and holders are inoperable while the winder is running.

To Run the Winder:

- rider roll must be lowered and loaded
- cores must be chucked
- roll ejector must be retracted
- cradle must be fully raised
- hydraulic unit must be on
- sheet holder disengaged
- slitters must be engaged
- drive must be ready
- tension must be on

To Eject a Roll:

- winder must be at zero speed (stopped).
- cradle must be raised.
- rider roll must be raised.
- chucks must be unchucked.
- coreslides must be raised.
- hydraulic pumps must be on.
- winder must not be in E-Stop condition.

WINDER TROUBLESHOOTING GUIDE

This chart contains a list of paper roll defects and their corresponding causes. For malfunctions of individual components, refer to the troubleshooting guide of the component involved.

PROBLEM	POSSIBLE CAUSE
Wrinkles	a) Improper Tension b) Misaligned Rolls c) Excessive Imbalance in Drum Torque d) Excessive Rider Roll Loading e) Sticking Slides f) Wide Variation of Sheet Caliper or Moisture g) Too Much Sheet Spreading
Vibration (Roll Bounce)	a) Excessive Imbalance in Drum Torque b) Paper Grade (Bulky Sheets) c) Out of Round Rolls (Starts) d) Mechanical Imbalance in Rider Roll or Drums
Starring	a) Improper Rider Roll Loading b) Too Much Sheet Tension at Outer Diameters c) Inoperative Tension System d) Too Little Tension during Build Up
Ridging	a) Bad Sheet Caliper or Basis Weight Profile b) Too Much Sheet Tension c) Too Much Rider Roll Load
Soft Starts (Loose Cores)	a) Rider Roll Pressure Too Low b) Tension Application Too Late c) Drum Differential Load Incorrect

WINDER TROUBLESHOOTING GUIDE

PROBLEM	POSSIBLE CAUSE
Offsets	a) Insufficient Tension b) Sticking Slides c) Loose Slides d) Fast Acceleration or Deceleration e) Altering Tension in Mid-roll f) Malfunctioning Tension Control System g) Malfunctioning Winder Drive Control
Dishing	a) Insufficient Tension b) Improper Rider Roll Relieving c) Wide Variation of Sheet Caliper d) Improper Spreading e) Deflated Air Shaft (If Applicable)
Interweaving	a) Insufficient Tension b) Incorrect Adjustment of Spreader c) Dull Slitters or Excessive Slitter Runout d) Bouncing Roll on Drums e) Misaligned Rotating Components f) Wide Variation of Sheet Caliper or Moisture Content
Bursts	a) Excessive Rider Roll Load b) Excessive Tension c) Building Roll Diameters that Exceed the Capability of a Given Product to Maintain Good Roll Structure d) Wide Variation of Sheet Caliper e) Too Much Torque at Front Drum

(This page left blank.)

Section 3. Component Information

REELSPOOL UNWIND

The reelspool unwind is designed to hold the parent roll in place during rewinding and to provide lateral motion for side-lay of the sheet. The regenerative drive will drive the parent roll while maintaining constant tension in the sheet during acceleration and deceleration.

REELSPOOL UNWIND COMPONENTS AND FUNCTIONS

Both saddles are mounted on hydraulically powered slide plates, thereby enabling the unwind saddles to move laterally for sidelay and oscillation. A disc brake assembly is included in the assembly for connection to the existing regenerative drive, and a clutch assembly couples the brake with the reel spool. The brake, clutch assembly, and baseplate are mounted on a concrete pier supplied by the customer. A crane hook stop is also included in the assembly.

Sidelay & Oscillation

The saddles move laterally (cross machine), for side-lay and oscillation in teflon slides mounted on the frames with a stroke of 4". When a reel spool is in place in the unwind saddles, all lateral motion—sidelay, oscillation, or centering—is powered by a single hydraulic cylinder attached to the backside saddle as regulated by the unwind valves USF-SV and USB-SV. The reel spool can be moved laterally (sidelay adjustment) +/– 2 inches from the center of the unwind stands, at thread speed or stop, by using the SIDELAY FRONT/BACK selector switches, which are located on the Unwind Panel 500 Operator Side or the Unwind Panel 560 Drive Side. Oscillation is also adjustable for +/– 2.0 inches, by use of the OSCILLATION INCREASE and OSCILLATION DECREASE buttons on the same control panel. The amount of oscillation is displayed on the INCHES OF OSCILLATION LED meter, also on the 560 panel. For additional information, see Unwind Framework Assembly Drawing 80-0546-0030 and Hydraulic Schematics 91-5020-0257.

Clutch

The clutch assembly is used to couple the stationary drive members with the reel spool. It is engaged by an air cylinder powered yoke assembly, and a square block is included to keep the assembly stationary during oscillation. See Clutch Drawing 80-3641-0019-0-001 and related schematics.

Payout And Takeup

The regenerative motor (provided by others), which is used to drive the parent roll (payout or takeup) and to maintain a constant tension level in the web during acceleration/deceleration, is connected to the reel spool via the sliding clutch assembly. The regenerative motor, brake, clutch assembly, and baseplate are mounted on a concrete pier supplied by the customer.

The rate of payout and takeup of paper from the unwind can be controlled with the PAYOUT/TAKEUP potentiometer on Panel 500 and the PERCENT UNWIND MANEUVER potentiometer on the benchboard.

Stopping

During LARS and Bel-OIT operation, the regenerative drive will bring the unwind to stops automatically, as controlled by setpoints sent to the drive from the PLC. For manually initiated stops, the Benchboard contains a STOP button for controlled stops, an EMERGENCY STOP button for emergency stops, and a COAST stop button for "coast" stops. EMERGENCY-STOP buttons are located on all winder control panels; the COAST STOP button is located on the benchboard. See "Stopping The Winder" in Section 2 for a full description of the functionality of EMERGENCY-STOP, COAST, and STOP forms of stopping.

Safety Hook Stop

The pivoting safety hook stop, which is mounted on the rear (drive side) unwind saddle, is used to prevent the crane hook from engaging the reel spool bearings while the clutch is engaged. The hook stop is pivoted to its "safety-stop" position by a pneumatic cylinder. The same cylinder lowers the hook stop to provide clearance for the hook when the crane is used to lift or lower the reel spool. The hook stop automatically moves to its raised, "safety-stop" position whenever the clutch is engaged. For a detailed description of mechanical components see Drawing 80-3650-0072.

UNWIND MAINTENANCE/INSPECTION AND ADJUSTMENT

1. Inspect all pneumatic and hydraulic components for leaks. Schedule immediate repair of any leaks.

2. Inspect the brake for worn pads and disc, and for any loose fasteners.

3. Inspect pinned components to make sure pins are in place and intact.

4. Check all pressure settings and flow rates. Compare to those recorded; make adjustments as necessary.

5. Make sure all limit switches are in good working order and functioning properly.

6. Refer to the hydraulic specification sheet for traverse and oscillation speed adjustments.

7. Check teflon slides for signs of wear or excessive clearance.

Lubrication

1. Grease shaft support pillow blocks.

2. Grease main unwind ways.

UNWIND INTERLOCKS

1. The winder will not run unless the spool ejector is lowered and the clutch engaged.
2. Crane will not operate in the unwind area unless clutch is disengaged.
3. In order to eject an empty spool, the clutch must be disengaged and the unwind must be centered.

UNWIND CONTROL SETTINGS

FUNCTION	RECOMMENDED INITIAL SETTING	FINAL SETTING AT START-UP
1. Raise/Lower Pressure	See Schematic(Hydraulic)	
2. Sidelay Pressure	See Schematic(Hydraulic)	
3. Clutch (Pneumatic)	45 psi	

Reference Drawings & Schematics

Unwind Framework:	80-0546-0030
Hook Stop:	80-3650-0072
Clutch:	80-3641-0019-0-001
Hydraulic Schematics:	91-5020-0257
Pneumatic Schematics:	91-5088-0393
Elementary Drawings:	92-5001-0098

LEAD-IN ROLL & BEFORE SLITTER SPREADER

The lead-in roll is designed to receive the sheet from the unwind and stabilize its entry into the slitter section. In combination with the before slitter spreader, the lead-in roll provides a means of regulating the distribution of cross machine tension in the passing sheet.

Lead In Roll

The lead-in roll, which is motor driven via a coupling at its drive-side end, is mounted in bearings near the top of the slitter frame columns. The lead-in roll can be raised and lowered vertically by means of a hand operated ratchet located at the operator side of the cross beam, making it possible to skew the sheet being fed from the lead-in roll to the before slitter spreader +/– 2 inches. No adjustment can be made at the drive-side end of the roll.

Before Slitter Spreader

The before slitter spreader is a belt-driven roll located between the lead-in roll and the first slitter roll. This spreader imposes its full, curved length into the sheet, providing a means for regulating cross machine tension and orientation of the sheet into the slitters. The before slitter spreader's bow is fixed, but its orientation into the sheet can be adjusted manually with the ratchet type mechanism at the operator-side of the slitter frame. The amount of spreader wrap is displayed on the SPREADER WRAP LED on Slitter Panel 615. For additional information about the before slitter spreader, see your Spencer Johnston documentation.

– NOTICE –

Make sure that all safety requirements listed in "General Safety and "Operator Safety" are met before operating this equipment

Reference Drawings And Schematics

Lead-In Roll Drive:	50-2863-0024-0-001
Before Slitter Drive:	50-2859-0038-0048

LEAD-IN SHEET THREADER & HOLDER

The lead-in sheet threader is used to facilitate threading of the web from the lead-in roll, past the before-slitter pivoting threader, and into the slitter section. The lead-in sheet holder is designed to hold the sheet in place in the slitter section when splicing.

LEAD-IN THREADER

The lead-in sheet threader assembly consists of a curved metal pan, which is contoured to guide the sheet over the lead-in roll, and three non-driven rubber wheels, which are mounted along the leading edge of the pan. The sheet threader is pivoted into and out of contact with the lead-in roll by a pneumatic cylinder. When engaged with the lead-in roll, the threader, under pressure from the cylinder, forms a nip that moves the sheet past the first contoured pan, over the lead-in roll to the second pan, which guides the tail past the before slitter spreader to the slitter section. The pneumatic cylinder used to engage the threader roll is also used to pivot it out of threading position when not in use.

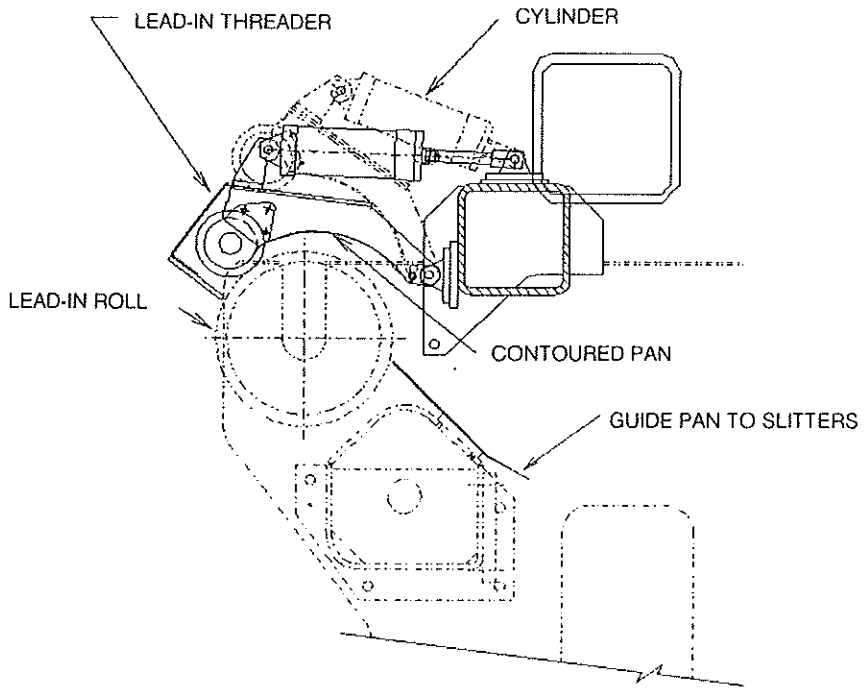

Lead-In Threader Operation

The basic functioning of the sheet threader is as follows. During threading, the wheels of the lead-in threader contact the lead-in roll under pressure from two pneumatic cylinders, thereby forming a nip that pushes the sheet along over the lead-in roll and the spreader pan, guiding it under the before-slitter spreader roll.

The lead-in sheet threader is controlled by the LEAD-IN SHT THRDR ENG/DISENG selector on Panel 650. For information about operating the lead-in sheet threader while threading and operating the winder, refer to "Threading the Winder" in the "Operation The Winder" section ofthis manual. Pneumatic pressure is registered and regulated with the gages and valves in the pneumatic control cabinet.

– NOTICE –

Do not confuse the LEAD-IN SHT THRDR ENG/DISENG control with the DRUM SHT THRDR OFF/ON selector switch on the Winder Frame Panel 700, which is used to control the windup threader under the back drum. Make sure that all safety requirements listed in "General Safety and "Operator Safety"are met before operating this equipment

1. To engage the threader, turn LEAD-IN SHT THRDR ENG/DISENG to 'Eng'. The threader will lower to the lead-in roll, nipping the paper between the rollers and the lead-in roll.

2. After the sheet is through the slitters, disengage the threader by turning LEAD-IN SHT THRDR ENG/DISENG to 'Diseng'.

LEAD-IN HOLDER

The lead-in sheet holder is designed to hold the sheet in place in the slitter section when splicing at the unwind. It consists of two rubber edged holder-bars that are attached to pivoting frame assemblies, which are engaged and disengaged with the lead-in roll under power provided by air cylinders mounted on the slitter frame crossbeam. The holder barS engage the sheet and hold it in place against the top side of the lead-in roll. The sheet holder is held in its raised "threading" position by pneumatic cylinders, which are also used to disengage the holders and pivot them out of the running position when not in use.

Using the Lead-In Sheet Holder

The lead-in sheet holder is engaged and disengaged with the LEAD-IN SHT HOLDER ENG/DISENG selector switch on Slitter panel 650. Pneumatic pressure is registered and regulated with the gages and valves at Panel 690 on the drive side of the slitter frame. For information about operating the lead-in sheet holder while threading and operating the winder, refer to "Threading the Winder" in the "Operation The Winder" section.

Reference Drawings And Schematics

Lead-In Sheet Threader:	50-1801-0150
Hydraulic Schematics:	91-5020-0257
Pneumatic Schematics:	91-5088-0393
Elementary Diagrams:	92-5001-0098

SLITTER SECTION

The slitter section is designed to receive the paper web from the unwind and cut it, cleanly and accurately, in the direction of flow. To do this, the slitter section includes positioning and tension rolls to properly orient and stress the web. Intermediate slitters sever the web into the desired roll widths; trim slitters (the end slitter on each side) cut and deflect the trimmed outer edges of the sheet into chutes for removal. The slitters on this machine are a Quickset type slitter designed for ease of movement.

SLITTER SECTION COMPONENTS

The slitter section is a vertical sheet run type. It includes the following components:

Slitter Section Rolls

As the web enters the slitter section from the unwind, it passes over three paper rolls that orient the sheet toward the slitters. They are the lead-in roll, the before slitter spreader, and the before slitter sectional roll. The lead-In roll and before slitter spreader are described in "Lead-in Section: Lead-in Roll, Threader, & Before-slitter Spreader" in this manual; the before-slitter sectional roll guides the sheet to the slitters, and it is described below. A fourth roll, the after slitter sectional roll, is located under the slitters. This roll, which is also referred to as the "tension" roll (see below), has two functions: it maintains tension in the passing web, and it is fitted with load cells that send web tension readings to the control system (see "Web Tension Control System").

Before-Slitter Spreader

The before slitter spreader is a driven, fixed bowed roll spreader that extends across the full length of the slitter frame. For a full description, see "Lead-in Section: Lead-in Roll, Threader, & Before-slitter Spreader" in this manual.

Before-Slitter Roll

The before-slitter roll is a grooved sectional roll that guides the sheet into the slitters.

After-Slitter Roll (Tension Roll)

The after-slitter roll (also referred to as the *tension roll*) is a grooved,sectional roll, which has a double function: It orients and guides the sheet to the dual-roll spreader, and, in conjunction with the load cell mounted under its bearings, it functions as a tension sensing device for the web tension system. See the "Web Tension Control System" section and Slitter Arrangement Drawing for additional information.

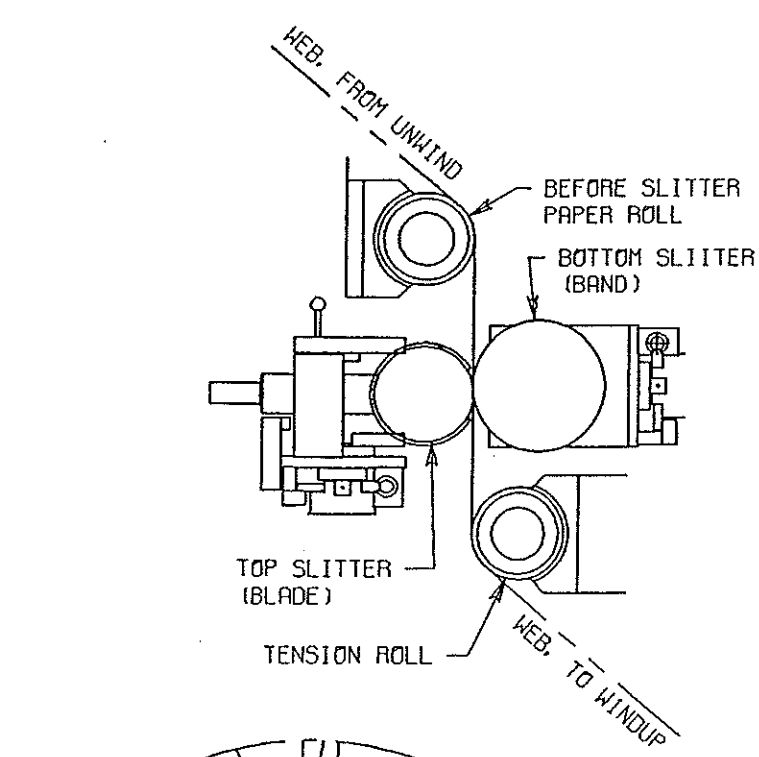

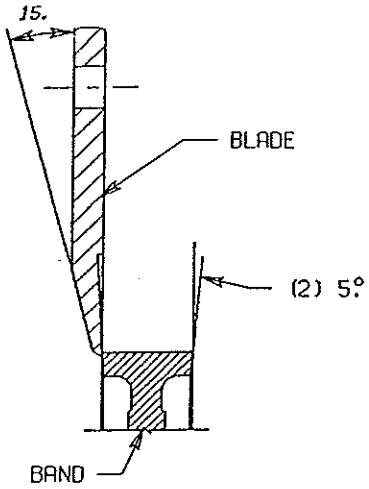

EXPLODED CROSS-SECTIONAL VIEW

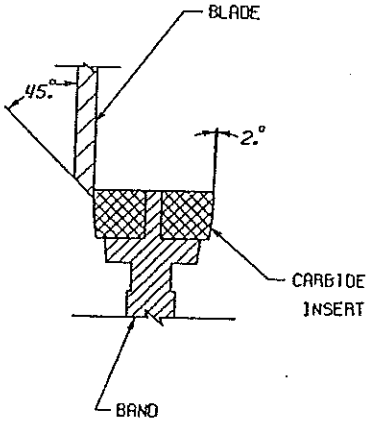

EXPLODED CROSS-SECTIONAL VIEW

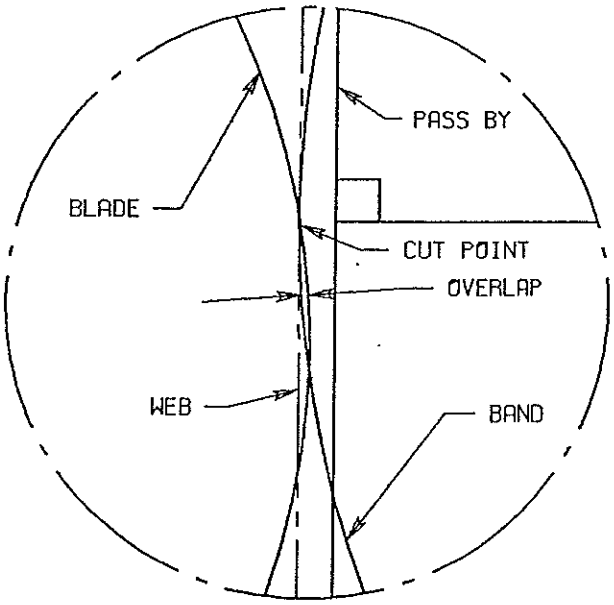

EXPLODED SIDE VIEW

VERTICAL SHEET RUN SLITTER SET-UP SHEAR SLITTERS

885A 88

A.C. MOTOR DRIVEN SLITTER ARRANGEMENT

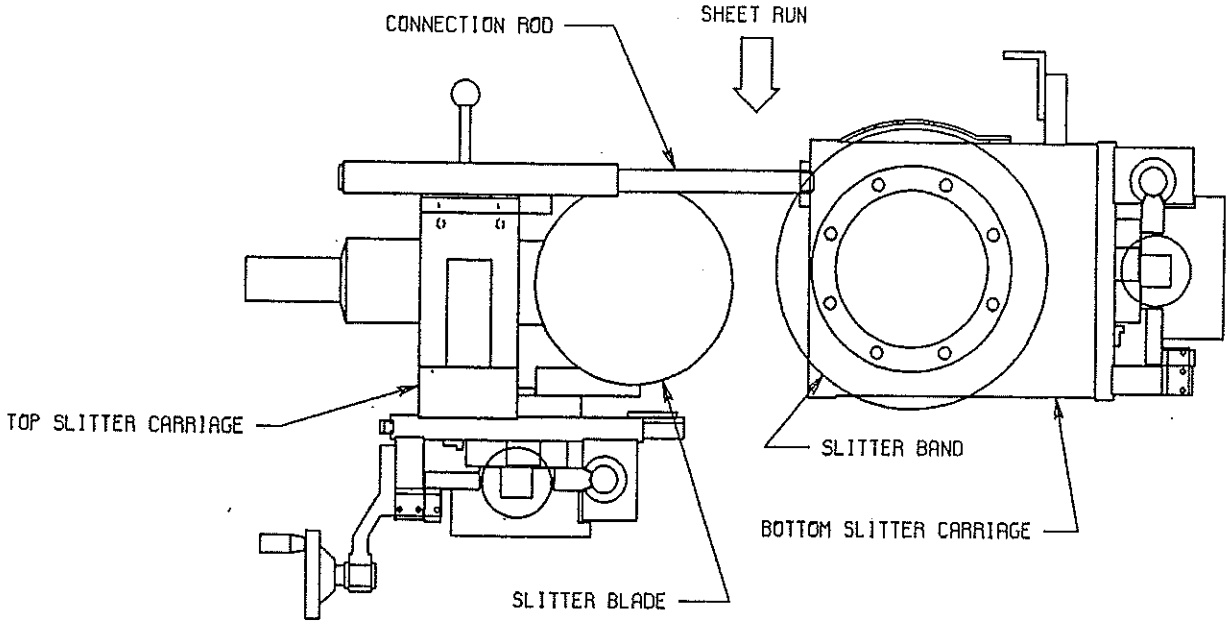

8654 B8

BEL-CADD®

Frames

The above items are mounted between two side frames that support the slitter and tension systems and are independent of any other winder mountings.

Quickset Slitters

There are a total of twelve (12) top and bottom slitter assemblies in this slitter section. The two outer slitters are used as trim slitters only; the remaining ten slitters all function as "inner".

The slitter assemblies are mounted on a gear rack on the slitter frame cross beam. They are a "shear-cut" style slitter and are equipped with a "quick-set" feature. This allows the operator to engage a "rifle bolt" type index pin and move individual top and bottom slitter pairs as a unit along the gear rack, maintaining their proper orientation to each other during the move by cranking the handwheel on the top slitter. When secured at the new location, the index pin is disengaged and the slitters are ready to cut.

The slitters, as stated earlier, are arranged for a vertical sheet run. The bottom slitters are the ones on the "winder" side of the sheet run; they are mounted in ways on the winder side cross beam of the slitter frame; they are driven by individual AC motors. The top slitters are the ones on the unwind side of the sheet; they are mounted in ways along the unwind-side cross beam of the slitter frame, and they are moved cross machine on a gear rack. The top slitters are not driven, they are rotated by the passing sheet.

GENERAL SLITTER SECTION INFORMATION

The bottom slitters are motor driven. When the top slitters are engaged, they will be driven by the force of the blades as they press against the bottom motor driven blades. During the threading of the sheet through the winder, it is essential that the trim slitters are engaged and turning, as soon as safely possible, to trim the sheet as it passes through the slitter section. The intermediate slitters will not normally be engaged during the threading operation. Ordinarily, the slitter section will be fitted with all right hand assemblies, except for one left hand trim slitter. (Circumstances can exist where more than one left hand slitter pair will be necessary; e.g., trim patterns that require more than one slitter to serve as a trim on each side. Also, some salvage operations will require up to half the slitters to be left handed.) Even though bottom slitter bands can cut on both sides, internal construction of the bottom slitter motor prohibits combining a right hand top with a left hand bottom, or vice versa.

The bottom slitter band is fixed relative to engagement with the top knife. The top knife moves under pneumatic power in a two step motion to engage with the bottom band: 50 mm (1.97") toward the bottom band, and a maximum of 6 mm (.236") laterally to contact the band, creating the cutpoint. The top knife is internally valved so that the blade will extend fully and then side load from a single signal. The slitters disengage by reversing the above sequence: unload (lateral motion), then retract.

The bottom band angle is fixed at 0 degrees by virtue of its mounting. The top blade is preset at an angle of .5 degrees; it can be adjusted +/- .5 degrees from that original setting.

As the top slitter blade is resharpened, its diameter will decrease. To maintain a fixed amount of overlap (.8 to 1.2 mm; .031" - .047") the distance between the blade and band must be adjusted by turning the two (24mm) hex nuts found under the knurled cylindrical cover. When a new blade is put on the top slitter, adjust the nuts to give more than enough overlap to insure the blade will not be nicked or damaged when loaded by having too little overlap, but not little enough to miss the band completely. After the blade and band are engaged, adjust the overlap to the dimension given above, lock the nuts in place and replace the cover.

⚠ WARNING

Exposed slitter knife edges can cut or sever hands and fingers. Do not adjust or touch slitters while the blades are turning. Make sure slitters are disabled and locked out, as described in "Changing And Relocating Slitters" in this manual, before making any close inspections or attempting to move them. If a blade falls or is dropped, do not try to catch if. Always wear protective gloves when handling slitter blades.

Pneumatic pressure is supplied to the slitters from flexible lies connected to two manifolds mounted on the slitter section cross-beam. Gauges and valves are mounted in the panels for pressure adjustments. The pneumatic pressure to the top slitter can be adjusted from 60 psi to 90 psi, yielding blade-to-band loads of 3.0 to 6.0 lb. A single pressure regulator controls pressure to all slitters (except the trims).

THE CUT POINT

The cut point is that place where the web and the arcs of the blade and band meet, and where the separating of the web begins. Ideally, this will occur at a point on the bottom band where, if a line were drawn connecting it to the center of the band, that line would be perpendicular to the 'Pass-By' sheet run. (See the "Vertical Sheet Run Slitter Set Up" illustration.) If the cut point is set too far toward the unwind, the overlap of the blade and band will be excessive, resulting in a dusty cut. If it is too far toward the winder, the overlap will be too little, resulting in inconsistent slitting and possible damage to the blades and bands.

Several factors determine the location of the cut point. When the machine is installed, the 'Pass-By' sheet run is determined and the bands are located to establish the correct sheet penetration. As shown on the illustration, sheet penetration is the maximum distance that the 'Pass-Over' sheet run deviates from the 'Pass-By' sheet run. The 'Pass-By' run is simply that which would occur if the bottom slitters were removed. The above relationship is established at installation and start-up and usually remains fixed from that point on.

The other factor in determining the cut point is the relationship of the blade to the band. As a blade is used, it will become dull and require sharpening. As the blade is repeatedly sharpened, its diameter will become smaller. The design of the knives is such that if the blade overlaps the knife by the amount stated above, the cut point will remain properly located throughout the life of the blade.

SLITTER SECTION CONTROLS SETTINGS CHART

FUNCTION	RECOMMENDED INITIAL SETTING	FINAL SETTING AT START-UP
ENGAGE/DISENGAGE	70 psi(4.5 bar)	
CUTTING PRESSURE	70 to 90 psi 3 lb load to 6 lb load	
POSITION CLAMPS	70 psi(4.5 bar)	

OPERATING THE SLITTERS

The procedures below provide instructions for changing the slitter blades and relocating slitter pairs. For operation of the slitters during the threading process, see "Threading The Winder" in Section 2. Winder Operation.

Changing The Slitter Blades

⚠ WARNING

Slitter knife edges can cut or sever hands and fingers. Do not adjust or touch slitters while the blades are turning. Make sure slitters are disabled with the SLITTERS OPER./DISABLE key switch on before making any close inspections or attempting to change or move them. If a blade falls or is dropped, do not try to catch if. Always wear protective gloves when handling slitter blades.

Top Blade

1. Turn the SLITTERS DISABLE/OPER selector key-switch to 'Disable'.
2. Unclamp the top slitter and move it away from the bottom slitter for working space.
3. Remove the capscrews holding the blade to the hub. Remove the blade.
4. Put on new blade and replace the capscrews, then check for wobble or runout. Replace blade or re-tighten if runout or wobble is evident.
5. Return slitter to its operating position, engage quick-set for alignment before clamping, then check for correct penetration. (See 'General Information' in this section of the manual.)

Bottom Band

1. Turn the SLITTERS DISABLE/OPER selector key-switch to 'Disable'.
2. Turn off and lock out power to the bottom slitter motors.
3. Unbolt the screws holding the band to the motor housing.
4. Remove the band. If the fit over the hub binds, jack the band using the four bolts in the band.
5. The band can be replaced or reversed to use the opposite cutting edge.
6. Carefully install the band in place, tightening the four bolts in steps to ensure proper seating.

Note: The cutting edge of a new bottom band is .413 (10.5mm) from the mounting surface. Shims will have to be placed behind the bottom band when more than .050 (1.25 mm) has been removed from it through sharpening.

7. When all band changes have been completed, return the SLITTERS DISABLE/OPER selector key-switch to its 'Oper' position.

Quickset Relocation Of Slitters

Use the following procedure to relocate slitters:

⚠ WARNING

Slitter knife edges can cut or sever hands and fingers. Do not adjust or touch slitters while the blades are turning. Make sure slitters are disabled with the SLITTERS OPER./DISABLE key switch before making any close inspections or attempting to move them. If a blade falls or is dropped, do not try to catch if. Always wear protective gloves when handling slitter blades.

1. Slide the quickset pin on the top slitter into the socket on the bottom slitter.
2. To deflate the pneumatic position clamp on the top and bottom slitter slide the ribbed blue barrel of the Festo pneumatic valve mounted on the slitters.
3. Move the slitter pair to the desired location.
4. Reinflate the pneumatic position clamps.
5. Disengage the quickset pin.

– NOTICE –

Any slitters not currently in use must be clamped to the beam. Unclamp them only when they are being repositioned. Slitters left unclamped can damage the equipment.

SLITTER SECTION MAINTENANCE

INSPECTION/ADJUSTMENT

⚠ WARNING

Slitter knife edges can cut or sever hands and fingers. Do not adjust or touch slitters while the blades are turning. Make sure slitters are disabled with the SLITTERS OPER./DISABLE key switch before making any close inspections or attempting to change or move them. If a blade falls or is dropped, do not try to catch if. Always wear protective gloves when handling slitter blades.

1. Turn the SLITTERS DISABLE/OPER selector key-switch to 'Disable'.
2. Check blades and bands for nicks and burrs. Schedule re-grinding if necessary.
3. Check proper overlap between blades and bands. The overlap should be 0.8 to 1.2 mm (.031 to .047).
4. Check the conditions of all electrical and air connections. Schedule repair of any faulty connections.
5. See that top slitter will maintain the knife loading.
6. The roundways on which both top and bottom slitters slide should be wiped clean of dust.
7. When all slitter changes have been completed, the SLITTERS DISABLE/OPER selector key-switch must be returned to its 'Oper' position before operation can be resumed. Winders with AutoTrim must also use that system's edge correction function before resuming operation.

LUBRICATION

Grease paper roll bearings. The lubrication cycle for slitters should be approximately once every two weeks, depending on use. Lubricant should have good cohesive and adhesive properties and contain both oxidation and corrosion inhibitors. Viscosity should be approximately 500 ssu at 100 degrees.

REFERENCE DRAWINGS AND SCHEMATICS

General Arrangement:	50-2113-0180
(See List Of Components for component drawings)	
Hydraulic Schematics	91-5020-0257
Pneumatic Schematics	91-5088-0393
Elementary Diagrams	92-5001-0098

SLITTER SECTION TROUBLESHOOTING CHART

PROBLEM	POSSIBLE CAUSES
Fuzzy cut at intermediate slitters.	a)Slitters set too deep. b)Side loading not high enough (above thread-speed) c)Slitter blade screws came loose d)Nicked blade.
Fuzzy cut at trim slitters	a)Slitters set too deep. b)Side loading not high enough. c)Slitter blade screws came loose. d)Trim guide hitting the blade e)Nicked blade.
Scalloped edge on trim slitters.	a)Trim not being taken away fast enough. b)Trim fluttering and unstable c)Side loading too high.
Snap-off in slitter section- when starting up.	a)Slitter jammed up (loading too high). b)Tension applied to the sheet too late. c)Uneven tension across the sheet (spreader mis-adjustment). d)Spreader roll after the slitters not adjusted correctly. e)Surging in the drive or braking system. f)Tear goes through the slitter stops
Snap-off in slitter section when running at speed.	a)Too much tension. b)Too much spreading (spread angle too great). c)Slitter jammed up because of too much side loading. d)Unstable trim. e)Slitter blade locknut loose f)Sheet flop from unwind stand

SLITTER SECTION TROUBLESHOOTING CHART

PROBLEM	POSSIBLE CAUSES
Slitters jamming up	a)Too much penetration. b)Blade hitting trim guide. c)Blade locking nut loose. d)Bearings sticking. e)Too much side loading.
Slitter does not rotate freely	a)Bearing sticking (too much or no lubrication). b)Blade hitting trim guide. c) Blade locking nut loose d) Too much side loading. e) Too much penetration.
Broken cutting edge on slitter blade	a)Top blade brought down on top of bottom blade. b)Improper handling.
Top blade jumped on the bottom blade while running	a)Not set deep enough. b) Machine vibration.
Top blade does not engage the bottom blade properly-	a)Top slitter blade not seated . b)Incorrect pressure setting
Bottom slitter moves while running	a) Air clamping hoses not properly seated in the coupling b) Insufficient air pressure. c) Ruptured or leaking air clamp
Both top and bottom slitter assemblies do not move freely on the roundways.	a)Paper dust in roundway bearings b)Damaged guide rollers.
Intermediate slitters do not-start cutting when engaged	a)Side loading to low. b) Slitters not engaged.

SLITTER SECTION TROUBLESHOOTING CHART

PROBLEM	POSSIBLE CAUSES
Trim slitters do not cut.	a)Trim deflector rubs against the blades, preventing them from turning. b)Side loading too low c)Air loading leakage.
Friction in the horizontal movement of the slitter blade	a)Insufficient lubrication.- b)Dirt in the bearings.

DUAL ROLL SPREADER

The Dual Roll spreader is used to spread the individual webs in order to prevent interweaving and other defects in roll structure. It consists of two ventagrooved, rubber covered, fixed-bow-rolls mounted in a frame located between the slitters and the winding drums; both rolls are driven by electric motors. The web passes under the first roll and over the second roll before it enters the drums. The bowed rolls can be rotated in or out of the sheet run, and adjustment of individual bow orientation is possible. A handwheel is provided to rotate the frame to adjust the amount of sheet wraps around the rolls. Adjustment ranges between 0° to 45° wrap, and it is displayed on a digital display. Threading pans are installed near the spreader to facilitate threading.

Operating The Dual Roll Spreader

Spreader wrap is adjusted from the handwheel on the operator's side. The orientation of the bowed rolls will depend on several things. The amount of wrap will increase with the number of slits being made. The ideal bow orientation is perpendicular to the incoming and outgoing sheet run. Therefore, the bow orientation may need to be reset when the wrap angle is changed. Web conditions will dictate when deviation from the "ideal" bow settings is required. To tighten the center of the sheet, adjust the high point of the #1 roll towards the web. To tighten the edges of the sheet, adjust the high point of the #2 roll away from the web. To increase overall spreading, at any given wrap angle, adjust both rolls equal amounts in the directions stated above.

NOTICE

Make sure that all safety requirements in "General Safety and "Operator Safety" have been met before operating this equipment.

When the spreader is properly set up, the slits should be neither spread apart nor overlapped as they contact the first roll. The slits will separate between the rolls. Coming out of the second roll, the slits should be separated and parallel, with no tension strains or wrinkles. While changes in the number of slits may require readjustments, the spreader should remain unaffected by speed, tension, or sheet weight.

Setting-up And Checking Out The Spreader

1. Set the spreader for zero or near zero wrap for the checkout of the drive and tension system. Set the bows perpendicular to the incoming and outgoing sheet runs.

2. When the above have checked out satisfactorily, engage two or three slitters and increase the amount of wrap until satisfactory spreading has been achieved. Readjust orientations of bows if required.

3. As the checkout continues, gradually increase the number of slits to the maximum. Record the various positions in the space provided for future reference.

DUAL SPREADER ADJUSTMENTS

SETTING NUMBER	NUMBER OF ROLLS	DEGREES OF WRAP	WAS BOW ORIENTATION ADJUSTED SINCE PREVIOUS SETTING?
A			
B			
C			
D			
E			
F			
G			

CORESLIDES

The coreslides and chucks support and align the rewind roll during winding. The chucks engage directly with the cores and are used to align them with the trim slitters. The coreslides (on which the chucks are mounted) rise vertically in machined ways in the winder frame as the roll's diameter increases, and they pivot horizontally to compensate for variations of end to end roll caliper of the forming roll set.

Coreslide Components

The coreslide assembly moves on steel rollers in the same machined ways as the rider roll, and it is suspended from hydraulic cylinders mounted in the winder frame columns. When disengaged from the roll, the chucks can be raised or lowered hydraulically for the full range of their travel. During winding, the raise/lower cylinders are hydraulically counterbalanced, which permits the coreslides to rise freely with the growing paper roll without imparting significant vertical forces to the roll. Limit switches mounted on the frame register the upper and lower limits of coreslide travel. AC motors and handwheels are used to position the chucks. Core stops, which are located under the slides between the winder drums and the winder frame column, line up the chucks with the cores at the start of the cycle.

Core Chuck Components

Each chuck consists of a steel outer shell that rotates on ball bearings around a spindle. During normal operation, they are positioned by using the positioning motors, which move the entire sleeve and spindle assembly in or out. Handwheels are also provided, but are not used during regular operation. To engage the cores, a hydraulic cylinder moves the spindle within the sleeve; a gage is mounted near the handwheel to register hydraulic pressure. Core chucks are commonly supplied with adapters for larger core sizes. The adapters are made of aluminum and/or steel and simply slip on over the chuck. An index pin prevents relative motion and a single screw holds the adapter in place.

Pivoting Core Chuck Function

The core chucks have a manually adjustable horizontal pivoting motion, which is designed to compensate for end to end variations in roll caliper of the forming roll set. To achieve this pivoting motion, the core chuck assemblies are suspended from pivot pins installed in bearing housing on the coreslide mounting plates. The maximum amount of pivoting horizontal core chuck travel is one half inch, with manual adjustment made via adjustment screws located in the underside of the core chuck barrel.

A centering device is included in the assembly to ensure that the core chucks will be returned to a centered position at the start of each set and will remain there until the sets build to a pre-set minimum. The centering device consists of a centering pin on the core chuck barrel, which slides into a slotted plate mounted in the frame. Centering is automatically achieved each time the corechucks are lowered into position to engage a new set of cores.

OPERATING THE CORESLIDES & CORE CHUCKS

The coreslides are operated by the operator from controls on Winder Frame Panel 700.

⚠ WARNING

Moving coreslides or core chucks can hit, pinch, or crush, and are capable of causing severe injury or death. Keep people away from the coreslides and core chucks while the winder is operating. Stop winder operation if people enter the operating area of the coreslides or core chucks.

Raising And Lowering The Coreslides

To raise the coreslides, rotate CORES SLIDES LOWER/RAISE to the "Raise" position. To lower the coreslides, rotate that selector to its 'Lower' position.

Engaging The Chucks

1. To engage the chucks, turn the CORE CHUCKS CHUCK/UNCHUCK selector to 'Chuck'; this energizes hydraulic valve WCCC-SV, extending the chuck cylinders.

2. To disengage the chucks, turn the CORE CHUCKS CHUCK/UNCHUCK selector to 'Unchuck'. This energizes valve WCCU-SV, retracting the chuck cylinders.

Positioning The Chucks

To position the chucks, use the FRONT CHUCK IN/OUT selector on the Winder Frame Panel 700 and the BACK CHUCK OUT/IN selector on the Winder Frame Panel 760. Use the following procedure to position the chucks:

Note: A removable hand-knob is supplied with each chuck in the event the locating system becomes inoperable.

1. With the chuck cylinder extended, manually position the 'Index' chuck surface to be in line with the trim slitter.

2. With the chuck cylinder extended, manually position the 'Floating' chuck to be .5 inches inboard of the trim slitter.

HYDRAULIC CIRCUIT

The fixed, or indexing, chuck extends at system pressure. The floating one extends at 125-200 psi, and is slower than the fixed chuck. Flow from the cylinders returns to tank through valve 'WCCC-SV'. Coreslide pressure setting procedures are described in the hydraulic schematics.

CORESLIDES CONTROLS SETTINGS CHART

FUNCTION	RECOMMENDED INITIAL SETTING	FINAL SETTING AT START-UP
CORESLIDE RAISE/COUNTERBALANCE PRESSURE	790/680 psi	
INDEX CORE CHUCK PRESSURE	Set At Start-up	
FLOATING CORE CHUCK PRESSURE	Set at start-up	

Reference Drawings And Schematics

Arrangement Drawing:	50-5436-0149-0-003
Core Stop Drawing:	50-5478-0072
Hydraulic Schematics:	91-5020-0257
Pneumatic Schematics:	91-5088-0393
Elementary Diagrams:	92-5001-0098

CORESLIDES/CORE CHUCKS TROUBLESHOOTING CHART

PROBLEM	POSSIBLE SOLUTION	REFERENCE
Coreslides won't raise	a) Check for proper setting and adjustment of valves WCSRF-SV & WCSRBSV and pressure reducing valve. b) Check that chuck is disengaged c) The winder cannot be running. d) Check that rider roll is fully raised e) Check that ejector is fully retracted	Hydraulic Schematics
Coreslides won't lower	a) Check for proper operation and setting of valves WCSLF-SV and WCSLB-SV b) Check that ejector is fully retracted	Hydraulic Schematics
Coreslides lower too fast	Adjust flow control on cylinder in frame	
Chucks are not properly counterbalanced.	Check for proper setting & operation of counterbalance reducing valves-	BELOIT Manual & Schematics
Chucks won't engage	a) Check for proper setting and operation of valve WCCC-SV b) Check operation of hydraulic unit	Hydraulic Unit Manual and Schematics
Chucks won't disengage	a) Check for proper setting and operation of valve WCCU-SV b) Check that winder is stopped.	Hydraulic Unit Manual
Floating chuck comes in too hard or too soft	Check for proper setting and operation of pressure reducing/relieving valve	Hydraulic Schematics

DRUM SHEET THREADER & HOLDER

The drum sheet threader and holder (also referred to as the *windup* sheet threader and holder) are designed to facilitate threading of the web under and between the drums. The sheet is guided by the configuration of the sheet threader and strategically placed air showers. When the sheet remains threaded between sets, the sheet holder is engaged. It clamps the sheet against the back drum, preventing it from slipping out of reach and maintaining the tension level.

COMPONENTS

The drum sheet threader consists of a ribbed metal pan shaped to guide the sheet under the first winder drum. A set of wheels protrude through the pan to contact the drum and form a driven nip to move the sheet up between the drums. Air showers hold the sheet against the drum as it turns. The pan assembly is pivoted out of position by two air cylinders when it is not in use. The threading pan is located at the center of the drum.

The drum sheet holder consists of one or more inverted "U" shaped frames. Across the horizontal portion is a cylindrical rubber strip which holds the sheet against the drum. The clamp frame is pivoted in and out of position by an air cylinder. The vertical portions of the holder frame attach to pivot brackets which are anchored to the floor.

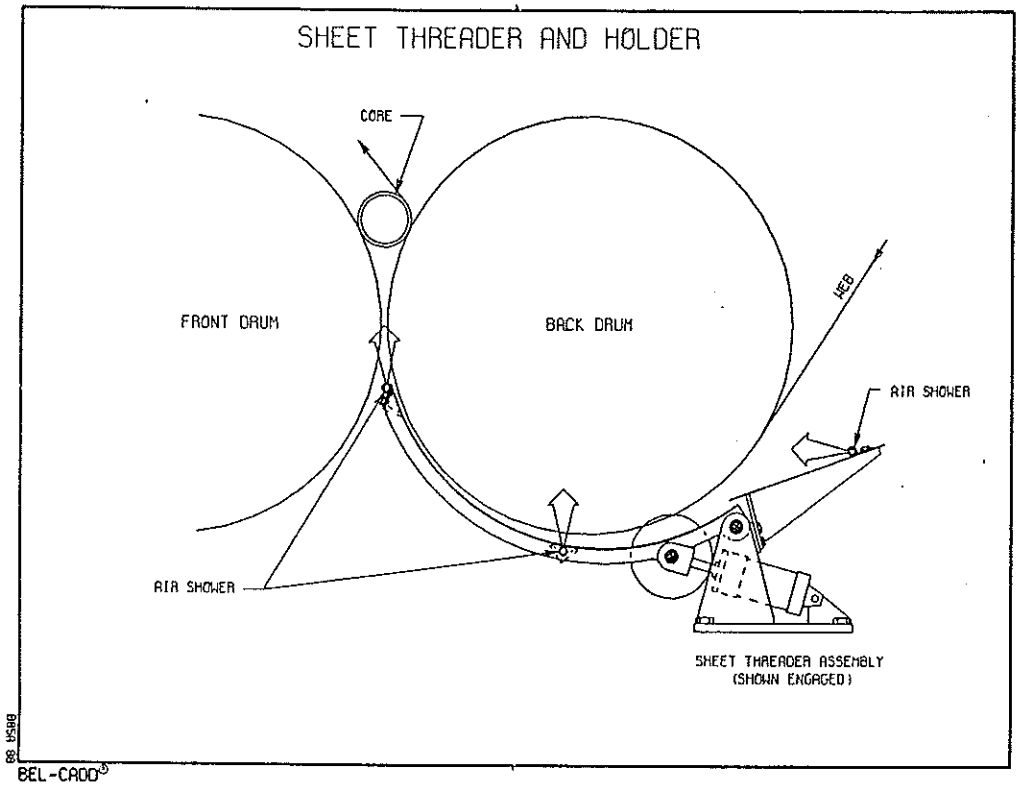

OPERATION

The windup sheet threader and holder are engaged and disengaged with the DRUM SHT THRDR OFF/ON and DRUM SHT HLDR OFF/ON selectors on Winder Frame panel 700. During regular operation, both the threader and holder will automatically retract to their disengaged positions when the winder leaves thread mode. Because the threading pan is located at the center of the drum, the sheet must be cut or torn on a diagonal to form a tail at the center to be engaged by the threader and holder. See "Threading The Winder" in Section 2 for descriptions of the use of the sheet threader and holder during actual threading operations.

NOTE: Do not set air pressure higher than 60 psig.

– NOTICE –

Make sure that all safety requirements listed in "General Safety and "Operator Safety" are met before operating this equipment

MAINTENANCE: INSPECTION/ADJUSTMENT

1. Check the condition of the sheet threader wheels. Make sure they turn freely.
2. Check the air pressure. It should not exceed 60 psig.
3. Check the condition of the air showers. See that the holes point in the right direction and have not become plugged.
4. Inspect the pneumatic components for leaky seals. Schedule repairs or replacement if necessary.
5. Engage the threader. Check for smooth action. Adjust the flow rate if necessary.
6. Inspect the air connections for leaks. Schedule repair of any faulty connection.
7. Check the condition of the rubber clamping member. Schedule replacement if necessary.
8. Check the condition of the sheet threader and clamp pivot bushings. Schedule replacement if worn.

Reference Drawings and Schematics

Assembly Drawings:	50-1801-0083
Hydraulic Schematics:	91-5020-0257
Pneumatic Schematics:	91-5088-0393
Elementary Diagrams:	92-5001-0098

CONTROLS SETTINGS CHART

FUNCTION	RECOMMENDED INITIAL SETTING	FINAL SETTING AT START-UP
THREADER ENGAGE/DISENGAGE	40 psi	
HOLDER ENGAGE/DISENGAGE	50 psi	

SHEET THREADER/HOLDER TROUBLESHOOTING CHART

PROBLEM	POSSIBLE SOLUTION	REFERENCE
Threader does not engage	a) check for proper operation of pneumatic valves. b) Check pressure and flow settings. c) Winder must be below 'Low Speed'.	Pneumatic Schematic Drive Manual
Air showers do not work.	a) Check the air shower pressure and flow rate. b) Check for plugged holes in the shower tubes. c) Threader must be activated.	Pneumatic Schematic
Holder does not engage	a) Check for proper operation of pneumatic valves b) Check pressure and flow settings c) Winder must be stopped.	Pneumatic Schematic Drive Manual

Articulating Rider Roll & Compliant Front Drum

This order includes an articulating rider roll and a compliant front drum. One of the primary functions of a rider roll is to provide the tight start essential for creation of proper roll structure. Later in the cycle, as the roll set's growing weight increases the nip between the roll set and drums, the need for rider roll pressure diminishes, and the system controlling the rider roll can gradually reduce the amount of loading. The articulating rider roll performs this loading regulation function automatically, and because of the flexibility of its construction, it maintains a highly uniform degree of nip control over the full width of the roll set. As a result, the articulating rider roll is capable of producing a high level of roll-to-roll structural consistency within each set. The front drum, which is coated with an elastomer covering, provides a compliant surface that conforms the profile of the roll set. This produces more even nip loading, reduced nip related defects, and increased roll diameter capacity.

Rider Roll Components

The articulating rider roll consists of a series of wheels covered with a resilient urethane material. The wheels are web driven, and they are mounted on anti-friction bearings attached to a full width beam. Individual wheels can be enabled or disabled independently. The suspension system for the wheels employs a combination of pneumatic and hydraulic controls that are designed to ensure that each wheel applies identical force to the rewinding roll set, regardless of roll-to-diameter variations of up to 1.5 inches within the set. Unlike a conventional rider roll, which concentrates the nip load at one or two of the highest points of the roll set, the articulating rider roll conforms to the profile of the entire roll set, distributing the nip load evenly across all rolls in the set. The articulating rider roll uses a closed loop, force-controlled nip loading system that measures the force where it is actually being applied - at the rider roll. As a result, the desired nip command curve is applied evenly and accurately across the entire set, from core to finished roll diameter.

Because of its ability to conform to variations in roll set diameter, the articulating rider roll improves roll-to-roll consistency within the set and eliminates the source of many defects caused by the uneven rider roll nip of conventional rider rolls. This is so, because even when properly maintained and aligned, conventional rider rolls cannot produce uniform nip loading across the entire set from the very start of winding, since even relatively minor variations in core diameter are capable of causing uneven roll structures within the same set as the rolls reach finished diameter. Consequently, as roll set diameter increases during winding with a conventional rider roll, caliper and other variations across the web add to the problems caused by the initial variations in core diameter, creating further inconsistency of roll structure in rolls within the set. In contrast, the evenly distributed nip load and uniform contact produced by the articulating rider roll's ability to conform to irregularities in the roll set's profile - for variations of up to an 1.5" in diameter - compensates for variations in the diameters of individual rolls, resulting in smoother, safer operation and improved roll structure of all rolls within each set.

The Articulating Rider Roll

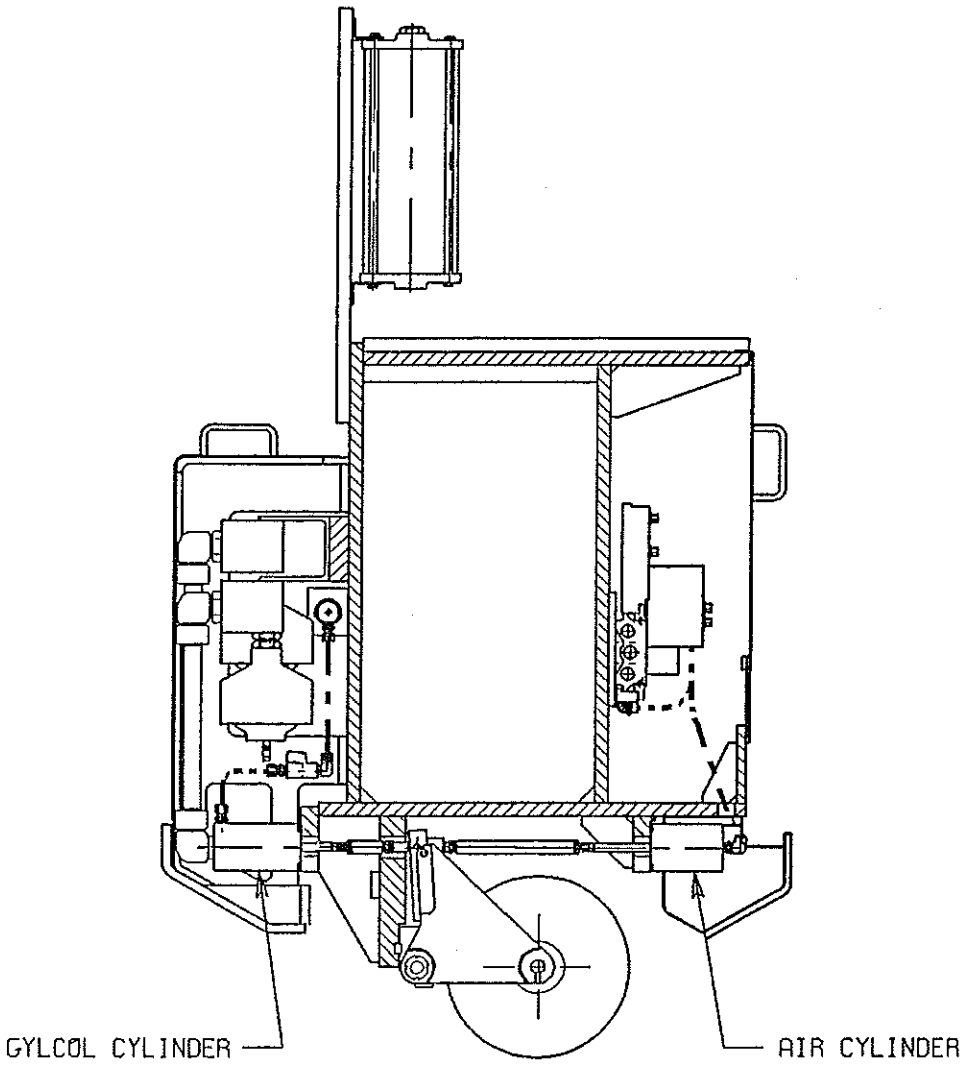

Compliant Front Drum

The front drum is covered with a 25 mm elastomer coating. This provides a compliant surface that conforms to variations of roll diameter as the roll set is wound, effectively reducing nip load as roll diameter increases. The surface of the coating is finished with a special grooved pattern that reduces wound tension. The roll data drawings and specifications for the compliant drum coating are listed in the List of Components appendix of this manual.

Reference Drawings And Schematics

See List of Components Appendix.

RIDER ROLL OPERATION

Once the articulating rider roll's wheels are selected and initialized it can be operated in the same way as a conventional rider roll: the RIDER ROLL RAISE/LOWER selector is used to raise and lower the rider roll and the RIDER ROLL LOAD and RIDER ROLL LATCHED indicators monitor latch and load functions. The primary difference between conventional and articulating rider roll operation is the initialization procedure of the rider roll wheel cylinder's fluid volume and pressure required by articulating rider roll. The initialization procedure is based on the number of wheels required for the set being run - the more wheels in operation, the more fluid (glycol) that is required and vise-versa. The reservoir tank has enough glycol capacity to fill all cylinders when they are in mid-stroke (running position).

⚠ WARNING

The rider roll must be kept on the rewind roll whenever the winder is running faster than 'Thread' speed. Do not attempt to operate, maintain, or repair the rider roll without reading the following sections of this manual: "Winder Safety Practices", "Operator Safety", "Maintenance Safety", "Lockout/Tagout Procedures", and "Danger, Warning, Caution, and Notice as Used In This Document".

Rider Roll Initialization

Initialization is an automatic process, initiated by the operator's use of the RIDER ROLL INITIALIZE button, by which the rider roll's computer prepares the rider roll for the set to about to be run. This process should be performed each time a new trim plan is selected or if the number of wheels selected has been changed. After initialization has been completed, subsequent roll sets can be run without re-initialization until the next trim plan change or wheel change is started.

During initialization the computer keeps track of the number of wheels selected for the set to be run, and it controls an automatic process that raises the wheels to their mid-stroke position and brings them into equilibrium. If the winder has an automatic slitter positioning system that communicates with the winder controller, slitter positions are downloaded to the winder controller from the slitter positioning system for use in this process of automatic wheel selection, and the controller utilizes this data to determine which wheels are to be raised from a slit and which ones are to be lowered into contact with the roll set (see illustration next page).

The initialization sequence occurs automatically if the RIDER ROLL INITIALIZE button is pressed when the following conditions are in effect: a new trim plan has been selected or a wheel change has been made; the rider roll is not loaded and is raised 10 to 20 inches above the cores or rolls (if the rider roll is loaded and on the cores or roll set, it will lift off automatically before auto initialize procedure starts).

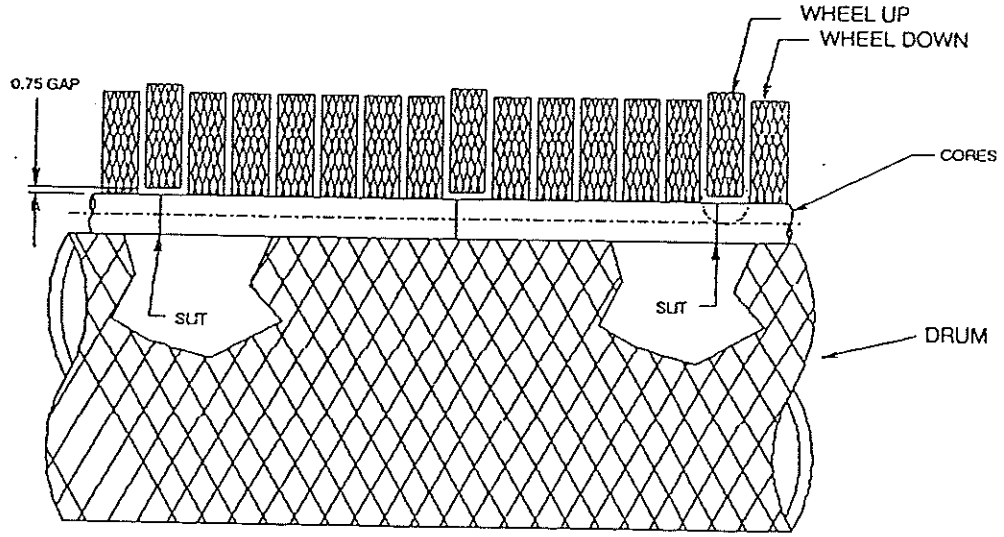

Automatic Operation: The Auto Initialization Sequence

In this sequence the computer automatically brings the wheels into equilibrium at their mid-stroke position by controlling the flow of glycol to the wheel cylinders. It determines the number of wheels selected for the current trim plan, and it signals the glycol system to fill the wheel cylinders with the correct amount of glycol required for the set. To achieve this, the following sequence of functions is automatically performed:

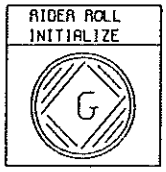

1. Half of the selected wheels, on an alternate basis, are disabled and moved to a fully raised position. Wheels that would be in line with a slit are raised out of contact with the set and are left disabled during the running of the set; they are not included in the number of wheels selected for the trim plan.

The wheels are raised as follows: the air cylinders of the wheels to be raised are switched to high pressure, which pushes the wheels up to a fully raised position, bottoming out the cylinder diaphragms and thereby preventing fluid from entering the fluid cylinders.

Note: Each wheel has an individual valve that controls air to the cylinder. Valves turn on to enable at approximately 10 psi counterbalance (varies depending on friction in the linkage). Valves turn off to disable at 60 psi fully up.

2. The glycol tank valve opens to fill the remaining half of selected wheel cylinders with fluid. The fluid pushes these wheels down from their midstroke (counterbalanced) position into contact with the roll set.

   Note: To facilitate this filling function, the glycol head pressure automatically switches to a "high/fill" setting to decrease time required to fill selected wheels.

3. When glycol filling of all selected wheels is complete, the fluid manifold pressure will stabilize at 5 psi, which acts as a setpoint for the computer to signal the glycol tank valve to close, trapping and retaining the fluid in the wheel cylinders.

4. At this point, the rider roll lowers and softloads on the cores, and the wheels raised in step 1 are permitted to accept entry of fluid into their cylinders. As the rider roll settles on the cores, its weight causes the fluid to flow into these empty cylinders from those filled in steps 2 through 4.

5. As the fluid distributes itself evenly between both groups of wheel cylinders, the rider roll beam moves to its counterbalanced, mid-stroke position and equilibrium is reached.

At this point the rider roll is ready to operate.

RAISING AND LOWERING THE WHEELS MANUALLY

The wheels can be raised and lowered individually on a manual basis through use of the WHEEL UP/DOWN switches. These controls are mounted on the beam above the wheels. Each switch is numbered according to the wheel it controls, and each panel of seven is located close to the wheels controlled from that panel.

– NOTICE –

Before running, make sure that wheels are not left in contact with the cores over slits.

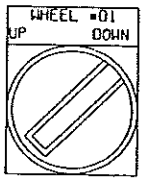

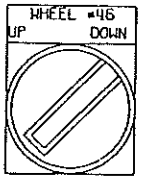

WHEEL GAP: VERIFYING MID-STROKE POSITION

It is important that the wheels are at mid-stroke position at the start of winding. Starting at mid-point makes it possible to utilize the full 1.5 inch stroke of the cylinders to achieve the greatest possible range of articulation. When the wheels are properly centered at mid-stroke position, the maximum articulation of 0.75 inches of travel is available in both directions. As a result, individual rolls in the set can differ in diameter from their immediate neighbors by as much as 0.75 inch and still receive the same amount of nip loading from the rider roll. Note: If the wheels are not centered properly, that potential range of wheel travel for nip loading will be shortened.

To check the gap, use block of wood 0.75 inches thick with a wedge shaped edge (see illustration). Wheel gap should be checked at least once a day.

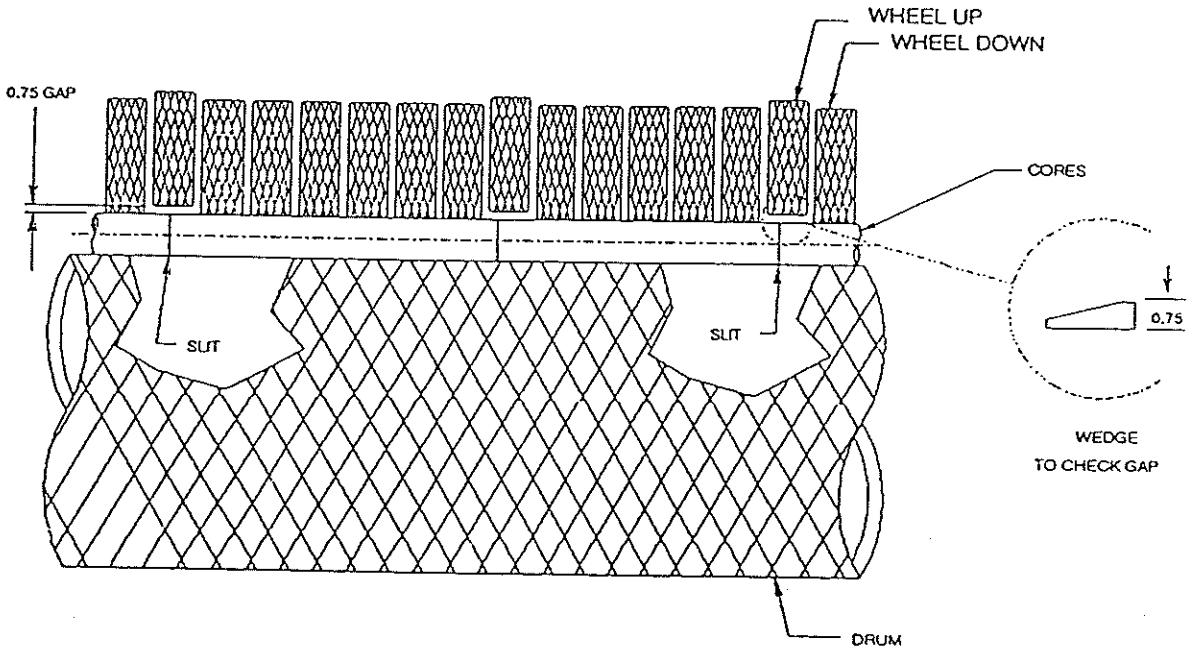

OPERATING IN ARTICULATING OR NON-ARTICULATING MODE

The articulating rider roll can be used in either articulating mode (closed loop mode) or in non-articulating (open loop) mode. With the exceptions cited in "Operating in Non-Articulating Mode" (below) the articulating rider roll should be operated in articulating mode (closed loop mode). When in non-articulating mode, the rider roll functions as a standard rider roll. Use the drive controls to set rider roll for closed loop operation (see to drive documentation.)

Articulating Operation

The articulating rider roll should be used in articulating mode during all normal winding conditions (see exceptions in "Operating in Non-Articulating Mode" below). Once the articulating rider roll's wheels are selected and initialized in preparation for operation in articulating mode, it is operated the same as a conventional rider roll: the raise, latch, lower, softload and load functions are all the same as during conventional rider roll operation.

Operating In Non-articulating Mode

The rider roll is ordinarily operated in articulating mode (closed loop mode). It should only be used in non-articulating (open loop) mode when one of the following conditions exists:

- Rider Roll pressure transducer failure
- More than 50% of the cylinders on any roll have been damaged or are not operating.

To operate the rider roll in non-articulating mode, the following procedure must be performed:

1. Open the glycol valve by turning the SYSTEM NORMAL/FILL selector to 'FILL' position. This will cause all wheels drop to a uniform, fully lowered position.

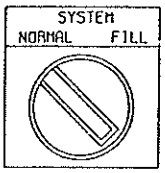

2. Raise all wheels to their fully raised position. Use the WHEEL UP/DOWN selector on each wheel. Note: All wheels must be raised until they lock into their fully raised position.

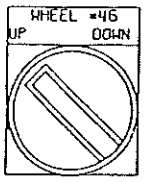

Operating In Non-articulating Mode (continued)

3. Use the drive controls to set rider roll for closed loop operation (see to drive documentation.)

4. With a straight edge of at least 3 feet placed at the bottom of the wheels, check to make sure that all wheels are level. If there are wheels that vary in height more than .005 inch, reset the linkage (refer to linkage adjustment instructions).

The winder will now run in open loop mode, with the rider roll functioning as a solid roll, non-articulating rider roll.

RIDER ROLL TROUBLESHOOTING CHART

PROBLEM	POSSIBLE SOLUTION
Wheels not maintaining position. Beam movement when rider roll is loaded on cores.	Check for bleed through at the glycol tank isolation valve RRGT-PSV. Check to see if valve selector switch SYSTEM NORMAL/FILL is set at 'FILL'. Check for leaks at system relief valve.
When all or some wheels are in raised (disabled) position no fluid is seen in sight glass.	Check level of P-glycol in the air/oil tank (reservoir). The level should be at the top line of the sight glass. Level will vary based on the number of wheels in use. See Fill/Bleed if low. Check for leaks and broken lines.
Wheel gap too small or too large.	Check wheel initialization and selection procedure. Check validity of slitter cut position data from slitter positioning system.
Wheels bouncing during operation (while winder is running)	Air in hydraulic system. Air needs to be bled from system. Use bleed ports located at top of accumulator block or manually operate cylinders up and down to work air out of system. See Fill/Bleed procedure. Check for mechanical damage.

RIDER ROLL TROUBLESHOOTING CHART

PROBLEM	POSSIBLE SOLUTION
Wheels bounce up when selected to go up	Air in hydraulic system. Air needs to be bled from system. Use bleed ports located at top of accumulator block or manually operate cylinders up and down to work air out of system. (See Fill/Bleed procedure.) Check for mechanical damage.
Wheels raise up after initialization is complete. Wheel counterbalance valve is energized.	Wheel counterbalance pressure set too high. See control setting chart.
Rider Roll nip feedback not following setpoint.	Check calibration and operation of rider roll manifold pressure transmitter (Viatram Pressure Transmitter). Fluid system not initialized at 5 psi. Check regulator and air supply.
Rider roll bounces or pressure spikes in feedback signal while running.	Tune controller constants - proportional gain and integral gain.
Wheel instability or binding.	Check for tread wear, mechanical damage, and unbalanced wheels.
Fluid on rolls or equipment.	Check for leaks and broken lines.
Glycol system pressure goes to 0 psi (0 bar) or possibly lower.	Wheel counter balance set too low. See pneumatic/hydraulic circuit setup.

RIDER ROLL TROUBLESHOOTING CHART

PROBLEM	POSSIBLE SOLUTION
Wheel initialization procedure does not work.	Glycol tank selector switch in closed position. Change setting to 'Auto'. PLC not in run mode. Failure of valve RRW (1-68) U_PSV, hose or fitting lead or disconnection. Fluid side air pressure too high. Rider roll not loaded.
Wheel won't go up.	Shutoff valve closed on fluid side. WRRGT_PSV closed - no fluid can return to tank/reservoir. Air pressure too low on air side. Valve RRW (1-68) U_PSV stuck or failed. Selector switch failure. Hose, line or fitting leaking or disconnected. Fluid side air pressure too high. Mechanical binding.
Wheel won't go down.	Counterbalance air pressure too high. Mechanical friction/binding. Bad regulator - not relieving pressure. Valve RRW(1-68) U_PSV stuck or failed.

RIDER ROLL TROUBLESHOOTING CHART

PROBLEM	POSSIBLE SOLUTION
Wheels chafing or material breaking off.	Replace wheel. Determine interference. Damaged by external forces (core chuck, knife, etc.)
All rider roll functions fail to work.	PLC in program mode. No 24VDC power to beam. No air pressure. Communication loss to beam.

RIDER ROLL MAINTENANCE SCHEDULE

Maintenance should be performed on a periodic basis. The time intervals of the following schedules should be regarded as the suggested minimum intervals permissible.

– NOTICE –

To avoid possible damage to the wheel cylinder diaphragms, always turn the SYSTEM NORMAL/FILL selector to 'Fill' position before turning off pneumatic pressure or powering down.

Weekly Check all air and fluid hoses for leaks.

Check all wheels for cuts, nicks or damage. Wheels should spin freely and true. Damaged wheel assemblies should be immediately replaced as this will cause winding problems should the wheel drag on the sheet or bind against an adjacent wheel assembly.

Check fluid level in reservoir. With all the wheels fully raised, the fluid should be very close to the glycol tank high level switch. With all the wheels lowered, the fluid should not go past the glycol tank low level switch.

Monthly Test PH of propylene glycol mixture. If PH is below 6, add corrosion inhibitor (dipotassium hydrogen phosphate) per container directions to bring PH to between 7 and 9.

Operation of the auto initialization system should be observed for mid-stroke position of a .75 inch (+/- .25 inch) gap between enabled (lowered) and disabled (raised) wheels.

Allow the rider roll to rest down against the cores in the "Loaded" mode. The wheels should maintain their position during a ten minute period. Rider roll beam should stay in the same position and not move. If beam movement occurs, check for "bleed through" at the glycol tank isolation valve (RRGT-PSV) and the system relief valve.

Check for loose bolts.

– NOTICE –

Do not attempt to maintain, repair, or operate the rider roll without reading the following sections of this manual: "Lockout/Tagout Procedures", "General Safety", "Operator Safety", and "Danger, Warning, Caution, and Notice as Used In This Document".

RIDER ROLL PNEUMATIC/HYDRAULIC CIRCUIT SETUP

With the rider roll raised from the cores or roll, use the following procedure with controls on the Rider Roll Beam Gauge Panel to setup the rider roll pneumatic and hydraulic equipment:

1. Precharge the accumulators with instrument air @ 50-55 psi (3.45 bar) as follows:
   a. Remove cap from Schraeder control valve.

   b. Connect hose from regulated air supply to the Schraeder valve nipple.

   c. Shut off air supply when pressure gage reads 50-55 psi.

   – NOTICE –

   Do not exceed 55 psi when charging the accumulators. Excessive pressure can damage cylinders.

   d. Disconnect hose from the accumulator valve and put cap back on nipple.

2. At the Rider Roll Beam Gauge Panel (see illustration) make the following settings:
   a. Turn the system NORMAL/FILL selector to 'Normal' position.

   b. Set WHEEL INITIALIZE PRESSURE regulator ('A' on schematic) to 5 psi. (.34 bar)

   c. Set WHEEL FILL PRESSURE regulator ('B' on schematic) to 30 psi. (2.04 bar)

   d. Set WHEEL DISABLE/UP PRESSURE regulator ('C' on schematic) to 60 psi (4.08 bar).

   e. Set WHEEL COUNTERBALANCE/DOWN PRESSURE regulator ('D' on schematic) as follows:

      (1) Manually open the glycol tank valve (RRGT-PSV on the schematic).

      (2) Slowly increase the wheel counterbalance pressure regulator 'D' from 0 psi (0 bar). The pressure should be approximately 12 psi (.82 bar), but it may vary slightly due to slight weight differences and friction. When about half of the wheels start to move very slowly upwards, stop increasing the pressure.

      (3) Now reduce the pressure by .25 psi (.017 bar). Being closer to the top of the friction "dead band" than to its bottom will ensure that the weight of the wheels does not cause a vacuum in the glycol system.

      (4) Manually close the glycol tank valve (RRGT-PSV).

3. With the supply line to all hydraulic wheel cylinders closed, set Rider Roll Pressure Sensor #1 to switch Off when pressure reaches 12 psi.

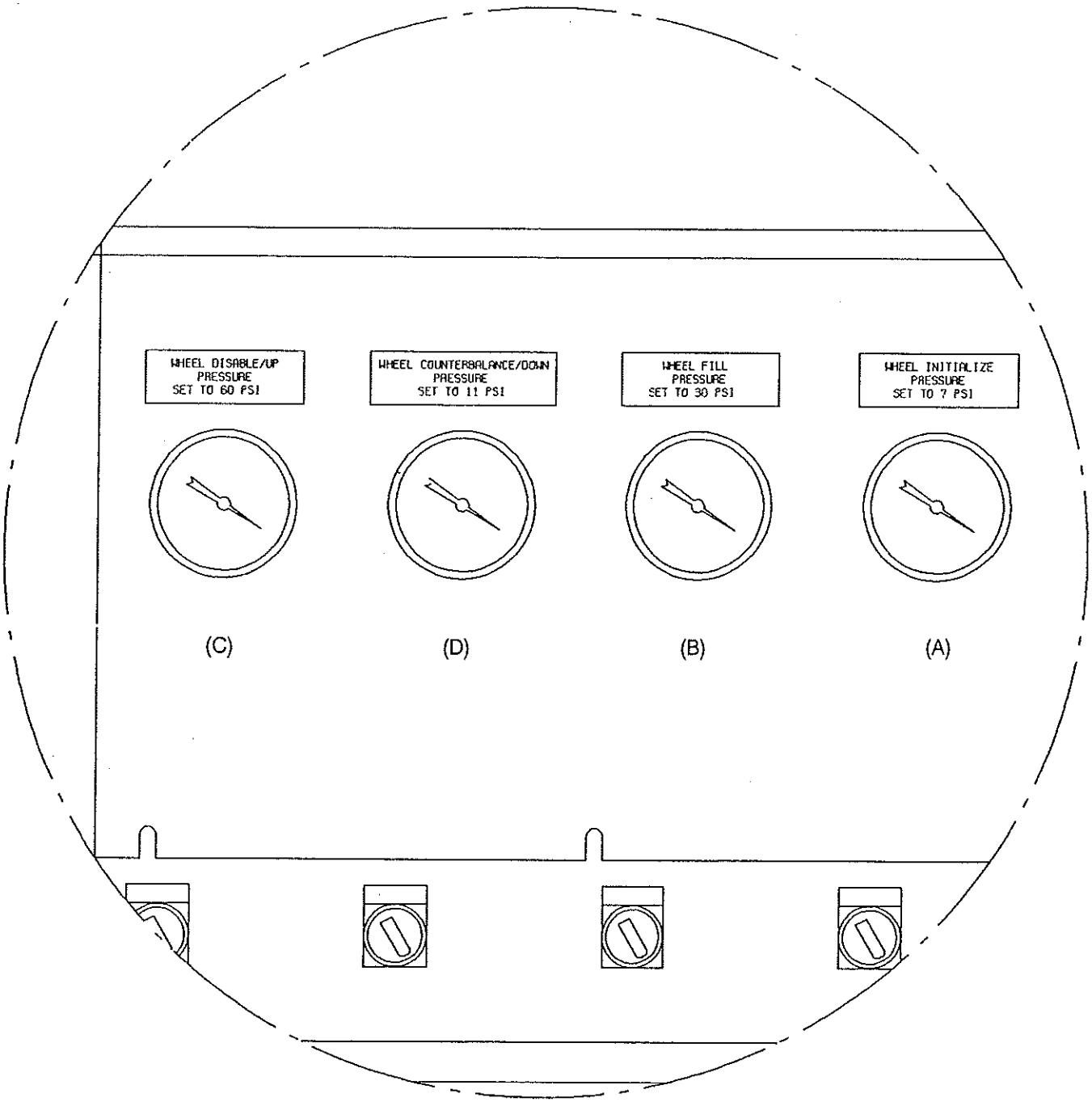

Rider Roll Beam Gauge Panel

Pneumatic/Hydraulic Circuit Setup (continued)

4. Set Rider Roll Pressure Sensor #2 to switch Off when pressure reaches 60 psi.

5. Determine the fluid's low level point and mount the glycol tank level low sensor (GTLL_PX) at that location as follows:

   a. Adjust GTLL_PX so that it is touching sight glass.

   b. With fluid in sight gauge adjust GTLL_PX range screw until yellow LED comes on. The LED should be off if there is no fluid in the sight gage.

6. Repeat the procedure used in step 5 for glycol tank level high sensor GTLH_PX, determining high level point and mounting the sensor at that location.

FLUID SPECIFICATIONS

The following propylene glycol solution is specified for use with this articulating rider roll:

Freeze Ban (with rust inhibitor)
Camco Manufacturing Incorporated
Phone (919) 668-7661
Propylene Glycol Solution (C3H802)
50% distilled water/50% glycol solution (mixing required by purchaser)

ARTICULATING RIDER ROLL CONTROLS SETTING CHART

FUNCTION	RECOMMENDED INITIAL SETTING	FINAL SETTING AT STARTUP
Wheel Initialize Pressure (psi/bar)	5 psi	
Wheel Fill Pressure (psi/bar)	30 psi	
Wheel Disable Pressure (psi/bar)	60 psi	
Wheel Counterbalance Pressure (psi/bar)	12 psi	

RIDER ROLL GLYCOL FILLING AND BLEEDING PROCEDURE

Tools Required:

- 10" Adjustable Wrench
- 15" Adjustable Wrench
- Funnel
- 1 gallon bucket

Materials Required:

Propylene Glycol mixture. See "Fluid Specifications". The amount varies based on the size of the machine. A rough estimate of propylene glycol mixture needed is the number of wheels x .5 gallons.

– NOTICE –

Use only non-toxic propylene glycol to fill tank.

Use the following procedure to fill and bleed the glycol fluid.

1. Place all wheels in their full raised position. Use the WHEEL UP/DOWN switches.

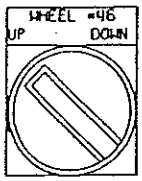

2. Open glycol tank valve (RRGT_PSV) using switch located in the benchboard. Turn the SYSTEM NORMAL/FILL selector to the "FILL" position.

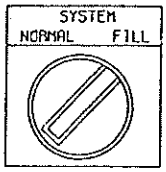

3. Turn off air pressure to the glycol tank "M", by shutting off WHEEL INITIALIZE regulator 'A' on the Rider Roll Beam Panel.

4. Carefully remove the tank plug from top of the glycol tank 'M' and add enough glycol to fill the tank to the top of the sight gauge.

– NOTICE –

Do not overfill tank. Do not reuse drained glycol, fluid may be aerated or contaminated and be unsuitable for use.

5. Replace and tighten plug.

6. Increase system pressure to 5 PSI by adjusting pressure regulator "A" on the rider roll beam.

Glycol Filling And Bleeding Procedure (continued)

7. Place an empty container under the manifold bleed valve on the upper end of the glycol manifold.

8. Open the manifold bleed valve and bleed system into the empty container. Allow the fluid to flow until there is a steady flow with no air bubbles, but do not permit fluid level to fall below view in the glass sight gauge on the tank.

– NOTICE –

Do not let the fluid disappear from the sight gauge. If the fluid is at bottom of the sight gauge and air bubbles are still present in the fluid flowing from the bleed valve on the upper end of the glycol manifold, close the valve and repeat steps 3-8 until there is a steady, bubble free stream of fluid.

9. After completing the bleeding procedure in steps 3 through 8, check the fluid level in the tank sight gauge. If the fluid is not at the top of the gauge, add glycol, as described in steps 3,4, & 5. (See illustration)

10. Close all cylinder segment shutoff valves to prevent fluid from being drawn from anywhere in the system other than the main header.

11. Open bleed port on top of #1 junction block.

12. Open cylinder segment #1 shutoff valve.

13. Wait for glycol to come out and then close the bleed port. Wipe off any excess glycol off.

14. Close cylinder segment #1 shutoff valve.

15. Open bleed port on top of #2 junction block.

16. Open cylinder segment #2 shutoff valve.

17. Repeat steps 12 and 13.

18. Close cylinder segment #2 shutoff valve.

19. Repeat Step #8 after 25%, 50%, 75% and 100% of the system has been bled.

20 Repeat this procedure until all the segments have been bled.

21. After completing all segments, open all cylinder segment shutoff valves.

22. Starting with wheel #1, lower and raise each wheel 3 times to check to see if any wheel consistently bounces up. If a wheel does consistently bounce, there will either be air in that segment or the accumulator is not charged. If there is a need to bleed a segment, all cylinder segment shutoff valves except the one being bled must be closed.

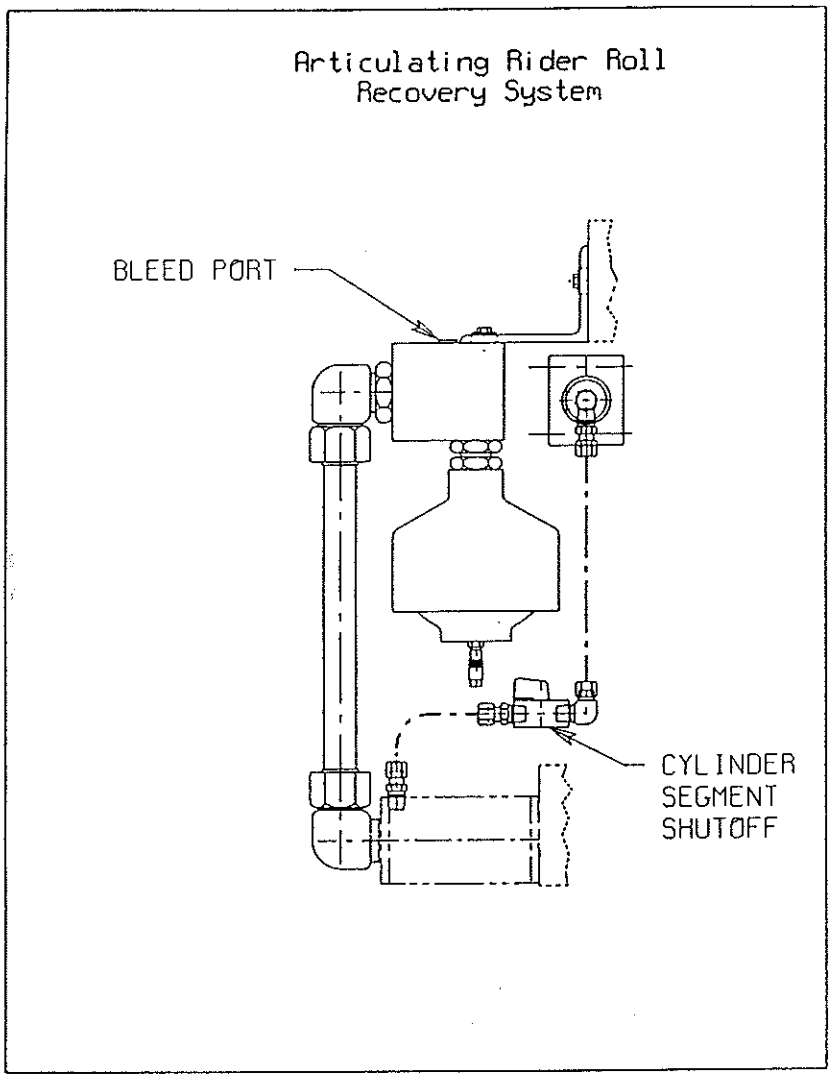

23. Check the fluid level in the glycol tank again to make sure it is filled almost to the glycol high level switch.

24. Use the WHEEL UP/DOWN switches to lower all wheels to their 'Down' position. The wheels will move to their fully lowered position and the glycol level will lower to somewhere just above the tank level low switch. If the level does not go below the switch, there is an acceptable amount of glycol in the system.

25. Close glycol tank valve RRGT_PSV by turning the SYSTEM NORMAL/FILL selector to its 'NORMAL' position.
    Note: The level of fluid in the sight gauge during production will vary according to the number of wheels raised or lowered.

RIDER ROLL REAR FLUID CYLINDER REPLACEMENT

Use the following procedure to replace a single fluid diaphragm cylinder on the rear of the beam.

1. Turn SYSTEM NORMAL/FILL switch the 'FILL' position.

⚠ CAUTION

Air supply to rider roll beam must be off before proceeding further.

2. Disconnect the loading linkage to the segment to be worked on. Hold the hex link while turning the cylinder rod until they separate. (Ref. Drawing 50-2703-0011).

3. Remove the four 1/4 inch screws holding the cylinder to the frame. (Ref. Drawing 50-2703-0011.)

4. Close the segment shutoff valve to prevent fluid from draining from open manifold port.

5. Disconnect the cylinder's tubing at the manifold shutoff.

6. Remove the cylinder from the beam and disconnect the tubing from the cylinder.

7. Extend the new cylinder; hold and fill with fluid. This will eliminate virtually all air from the cylinder.

8. Attach the tubing to the replacement cylinder.

9. Install the cylinder to the frame and attach with four 1/4 inch screws.

10. Compress the cylinder slightly to force fluid through the tubing, displacing any air in the tubing.

11. Reconnect the cylinder tubing and open manifold shutoff valve. Starting with the fitting slightly loose, slowly compress the cylinder as you tighten the fitting.

12. Reconnect the linkage to the segment and adjust it as described in "Linkage Adjustment Instructions".

13. Check the glycol tank fluid level with all the wheels in the 'UP' position. Fluid level as seen in sight glass should be just below glycol tank high level sensor. If it is not, refer to "Glycol Filling and Bleeding Procedure.

RIDER ROLL LINKAGE ADJUSTMENT INSTRUCTIONS

The linkage must be kept in vertical alignment for the following reasons:

- To prevent the diaphragm cylinders stroke from bottoming out. Failure to adjust the diaphragm cylinders may result in diaphragm damage due to pinching.
- Maximum segment travel, necessary for handling the more extreme profile variations, will only be obtained when all segments are properly adjusted.
- In order for use the rider roll in conventional, non-articulated mode (which must be kept available for back-up operation) all wheels must be in horizontal alignment with each other.

⚠ WARNING

Always block the rider roll when working beneath it.

Use the following procedure to adjust the linkage (Refer to Drawings 50-2703-0011-0-001 and 91-5088-0397).

1. Set rear cylinder rod shoulder to segment eye dimension.

2. Using a gage block, set the distance from the face of the segment block, which accepts the linkage pin, to the shoulder on the end of the rear cylinder rod. The distance should be 3.82 inches. The adjustment is made by holding the connecting hex link and rotating the rod of the cylinder. A lock nut is provided to secure the adjustment.

3. Using WHEEL DISABLE regulator on the gauge panel ("C" on the schematic), reduce the disengage pressure to approximately 20 PSI.

   Note: Lowering the pressure prevents damage to the diaphragm at the bottom of the stroke.

4. Retract the stop screws, on the rear of the beam, which are used to limit the upward stroke of the segments.

5. Lift up the segment with its WHEEL UP/DOWN switch. The segment's rear cylinder should now be at the bottom of its stroke.

6. Check to see if the front cylinder is preventing the rear cylinder from bottoming out. Do this by loosening the front cylinder's lock nut and checking to see if the cylinder rod rotates freely. If it doesn't, lengthen the rod until it moves freely.

7. Adjust the stop screws on the rear of the beam as follows: screw the stop screw into contact the segment block or until the assembly moves. Then turn screw exactly 2 turns more. This should be within half a flat on the hex head of the stop screw.

Rider Roll Linkage Adjustment Instructions (continued)

8. Set the front cylinder linkage length. Use the following procedure:

   a. Lower the segment by turning the WHEEL UP/DOWN selector switch to 'Down'.

   b. Proceed to shortening the linkage while monitoring the position of the rear cylinder rod or wheel as follows: When the unit just stops dropping, shorten the front linkage 1 turn more. As the front link is shortened, the rear piston will reach the end of its extended stroke. Stop shortening at this point. Further shortening will pull the front cylinder from its fully bottomed position.

   c. Lock the lock nut.

RIDER ROLL SEGMENT REMOVAL/INSTALLATION

These procedures are used when a segment must be repaired, maintain, or replaced. They describe only the removal of the segment as a unit; bearing replacement and repairs that requires disassembly of the segment side plates must be performed at Beloit Lenox. It is recommended that you keep enough spares in stock to replace 20% of the segments on the rider roll.

Segment Removal Procedure

Use the following procedure to remove a complete segment:

⚠ WARNING

Personnel can be struck and crushed if the Rider Roll falls. Always block the rider roll when working beneath it.

1. Turn SYSTEM NORMAL/FILL switch the 'FILL' position.

2. Shutoff the air supply to the rider roll beam.

3. Lower all the wheels to their fully lowered position.

⚠ CAUTION

Open air lines can cause damage to eyes and exposed skin. The air supply to the rider roll must be turned off before working on the segment.

4. Disconnect the linkage to the rear cylinder by loosening the lock nut.

5. Hold the hex link body and turn the cylinder rod until the rod separates from the body.

6. Support the segment with blocking.

7. Disconnect the linkage to the front cylinder by loosening the locknut.

⚠ CAUTION

Hands and feet can be struck if the segment falls. Always make sure the segment is adequately blocked before separating the segment from the beam.

8. Hold the hex link body and turn the cylinder rod until it separates from the body.

9. Remove the two 1/2 inch bolts holding the pivot block to the keyed mounting surface on the beam. The segment is now free of the beam. If necessary, apply lateral force to the segment to remove it from the keyed surface.

At this point the segment is free of the rider roll and, if necessary, can be removed from the rider roll area.

Segment Installation Procedure

Use the following procedure to remove a complete segment:

⚠ WARNING

Personnel can be struck and crushed if the rider roll falls. Always block the rider roll when working beneath it.

1. Support the wheel segment with appropriate blocking at the drum.

⚠ CAUTION

Hands and feet can be struck if the segment falls. Always make sure the segment is adequately blocked before separating the segment from the beam.

2. Move the segment into place on the keyed surface on the beam. It may be necessary to apply lateral force to get the segment into position.
3. Install the two half inch bolts that hold the pivot block to the keyed mounting surface.
4. Connect the linkage to the front cylinder and set the gap per drawing 50-2703-0011.
5. Tighten the lock nut.
6. Connect the linkage to the rear cylinder and set the gap per drawing 50-2703-0011.
7. Tighten the lock nut.

The segment is now ready for use.

RIDER ROLL CALIBRATION

MANIFOLD PRESSURE FEEDBACK

Constants:

Glycol Initialize Pressure (GLY_IP) = 5.0 PSI
Glycol PLI/PSI (GLY_PLI_PSI) = 1.00 PLI/PSI
Maximum Rider Roll Load (MAX_NIP) = 20.0 PLI

Pressure Transmitter Scaled (0-50 psi) ARR PSI_IN

Output 4 mA = 0 psi / 0 bar
20 mA = 50 psi / 3.4 bar

Converting pressure feedback to PLI feedbacks units:

NIP_PLI_FB = (ARRPSI_IN - GLY_IP) * GLY_PLI_PSI
If Pressure Feedback = 25 psi
NIP_PLI_FB = (25 psi - 5 psi) * 1.00 = 20 PLI

If Pressure Feedback = 7 psi
NIP_PLI_FB = (7 psi - 5 psi) * 1.00 = 2.0 PLI

RIDER ROLL CONTROL LOOP

Control Loop Setup Chart Using PID ISO Equation

Parameter	Initial Settings	Final Settings at Start UP
Proportional Gain	.04	
Integral Response	80 rep/min	
Derivative Time	N/A	N/A

DIFFERENTIAL TORQUE CONTROL

Differential torque control is a method of proportionally varying the available torque between the front drum and back drum. A tighter start is created by transferring some of the torque from the back to the front drum at the start of the winding cycle. This, of course, is done in conjunction with the force applied by the rider roll as described in the "Articulating Rider Roll" section. Differential torque control is an automatic function of the Bel-OIT and LARS (Lenox Auto Roll Structure) systems. The mechanisms that vary the torque are electrical - they are contained within the circuitry of the winder drive itself.

DIFFERENTIAL TORQUE OPERATION AND ADJUSTMENT

The differential torque control system is designed to function automatically during Bel-OIT and LARS operation. During Bel-OIT operation it is possible to create and edit tension curve setpoints when the winder is stopped, and biasing (see below) is permitted while the winder is running. (See "Starting the Winder" and "Running the Winder" in Section 2 for instructions about when to make such adjustments, and see *Bel-OIT User's Guide* for instruction in how to make them.) When operating in LARS, torque curve setpoints are fixed, but they can be biased.

Biasing (raising and lowering) of the current differential torque curve can be achieved on an on-line basis while the winder is running, in both Bel-OIT and LARS, by use of the torque biasing controls on the Panel View on the benchboard. (See "Using the Panel View" in Section 2.)
Note: During biasing, the whole curve is raised or lowered, while the relative position of setpoints in curve remain unchanged.

For information about operation, setting of parameters, and procedures for making "fine tuning" adjustments to torque settings when operating in Bel-OIT mode, see the Bel-OIT User's Guide. For descriptions of LARS, see "Running the Winder" in Section 2.

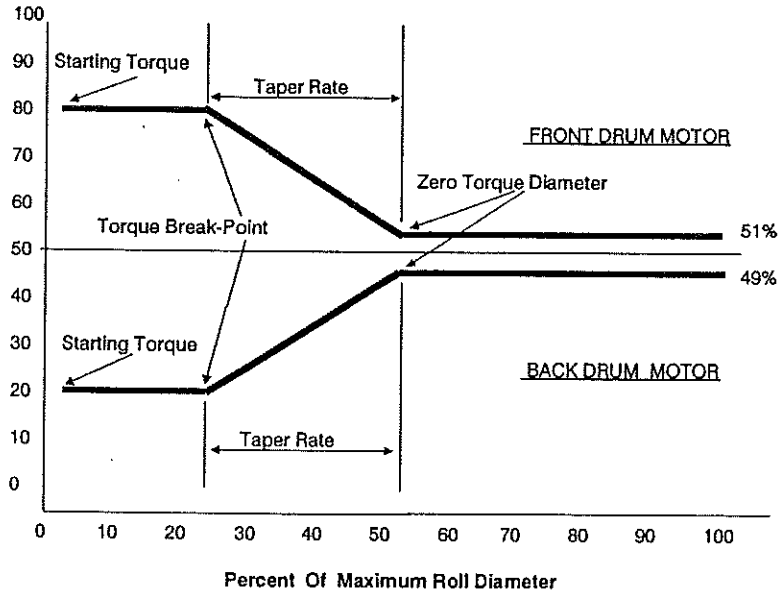

MONITORING THE SYSTEM

Analog meters are located on the benchboard for the front and the back drum motors. Because the amount of amperes consumed is directly related to torque output, the Analog can be used to monitor the torque output of each motor. Early in the run mode, if the starting torque is set at or near 100%, the front drum Analog meter will, as expected, read substantially higher than the back drum Analog meter. When the differential rate setting is reached, both meters will be giving nearly the same reading, although the front drum is commonly set up to read just slightly higher than the back drum at the nominal 50/50 ratio.

DIFFERENTIAL TORQUE CONTROL - MAINTENANCE

Inspect all electric connections and components for proper operation. Schedule repairs if required. (See drive manual under separate cover.)

Reference Schematics

Elementary Diagrams: 92-5001-0098

DIFFERENTIAL TORQUE CONTROL TROUBLESHOOTING CHART

PROBLEM	POSSIBLE SOLUTION	REFERENCE
Not getting a tight start.	Check output signal from the diameter transducer; check for proper operation of roll hardness and drive control system.l	BELOIT Manual & Drive Manual
Too much wound-in tension. (See also "Tension Control" and "Rider Roll" sections.)	Same as above	
Too little wound-in tension. (See also "Tension Control" and "Rider Roll" sections.)	Same as above	

AUTOMATIC WEB TENSION CONTROL SYSTEM

The web tension control system is designed to maintain constant sheet tension automatically during acceleration, steady speed, deceleration, and through diminishing parent roll diameters (see illustration).

The hardness of rewound rolls is affected by sheet tension, which is a function of the parent roll's resistance to being unwound. A constant tension level is maintained throughout the winding cycle in order to maintain control over the slit sheets and prevent soft spots in the roll, interweaving, and other types of roll defects.

TENSION CONTROL SYSTEM COMPONENTS AND OPERATION

The web tension control system includes the following parts (see illustration for configuration):

1. A tension roll over which the web travels. The web wraps the tension roll and, in doing so, exerts a force on it proportional to the amount of tension in the sheet.

2. Three load cells, which support the tension roll. They measure the force exerted on the roll and convert it into a proportional measured output.

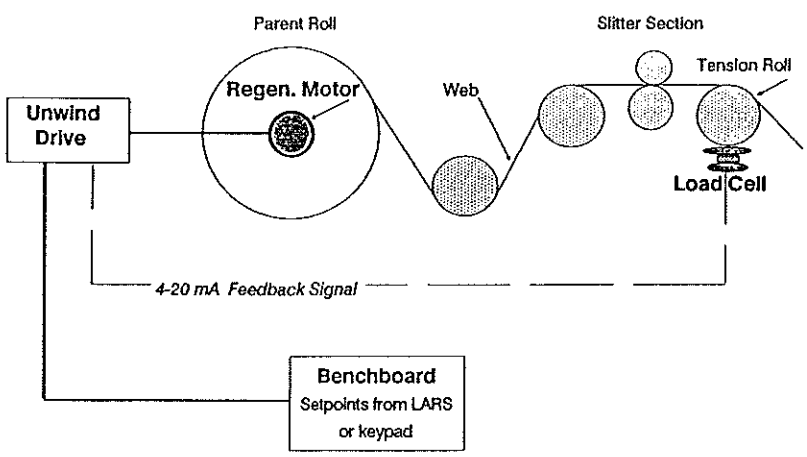

Regenerative Braking/Load Cell Tension Control System

TENSION CONTROL COMPONENTS AND OPERATION (continued)

The system operates in the following way. Setpoints (in actual foot pounds) are sent to the Unwind Drive Controller from the program being run. The load cells send a 4-20 mA feedback signal to the unwind drive controller, which compares the two signals and accelerates or decelerates the unwind motor to regulate the sheet tension.

The web tension system is designed to function automatically during Bel-OIT and LARS operation. During Bel-OIT operation it is possible to create and edit tension curve setpoints when the winder is stopped, and biasing (see below) is permitted while the winder is running. (See "Starting the Winder" and "Running the Winder" in Section 2 for instructions about when to make such adjustments, and see Bel-OIT User's Guide for instruction in how to make them.) LARS does not permit creation or editing of its web tension curve, but it does permit biasing.

Biasing (raising and lowering) of the current web tension curve can be achieved on an on-line basis while the winder is running, in both Bel-OIT and LARS, by use of the tension biasing controls on the Panel View on the benchboard. (See "Using the Panel View" in Section 2.)
Note: During biasing, the whole curve is raised or lowered, while the relative position of setpoints in curve remain unchanged.

Reference Drawings and Schematics

Elementary Diagrams: 92-5001-0098

TENSION TROUBLESHOOTING CHART

PROBLEM	POSSIBLE SOLUTION	REFERENCE
Instability	a)Check operation of load cell controller b) Check unwind core or roll for out-of-round. c)Check for proper operation of the controller.	Comptrol Manual
No signal or no change in signal.	a)Check floating bearing on tension roll for alignment. b)Check operation of load cell controller.	Comptrol Manual

ROLL EJECTOR

The rear-drum roll ejector is a drum width beam, mounted on the back drum bearing housings, that is used to push ("eject") rolls from the drum pocket into the cradle. It is powered by two hydraulic cylinders; the rods are attached to pads on the ejector, and the base of the cylinder is attached to the cross-beam of the winder frame. To perform its roll-ejection function, the roll ejector pivots around the back drum toward the front drum and pushes completed roll-sets from the drum pocket into the cradle. Upon completion of an ejection, the roll ejector is pivoted back to the fully retracted ("Return") position behind the rear drum that it occupies while sets are being run. The cylinders retract to rotate the ejector to "eject" position; they extend to move the ejector to its "Return" position. The roll ejector also contains air showers, which are used during threading (see "Threading the Winder" in Section 2 of this manual.)

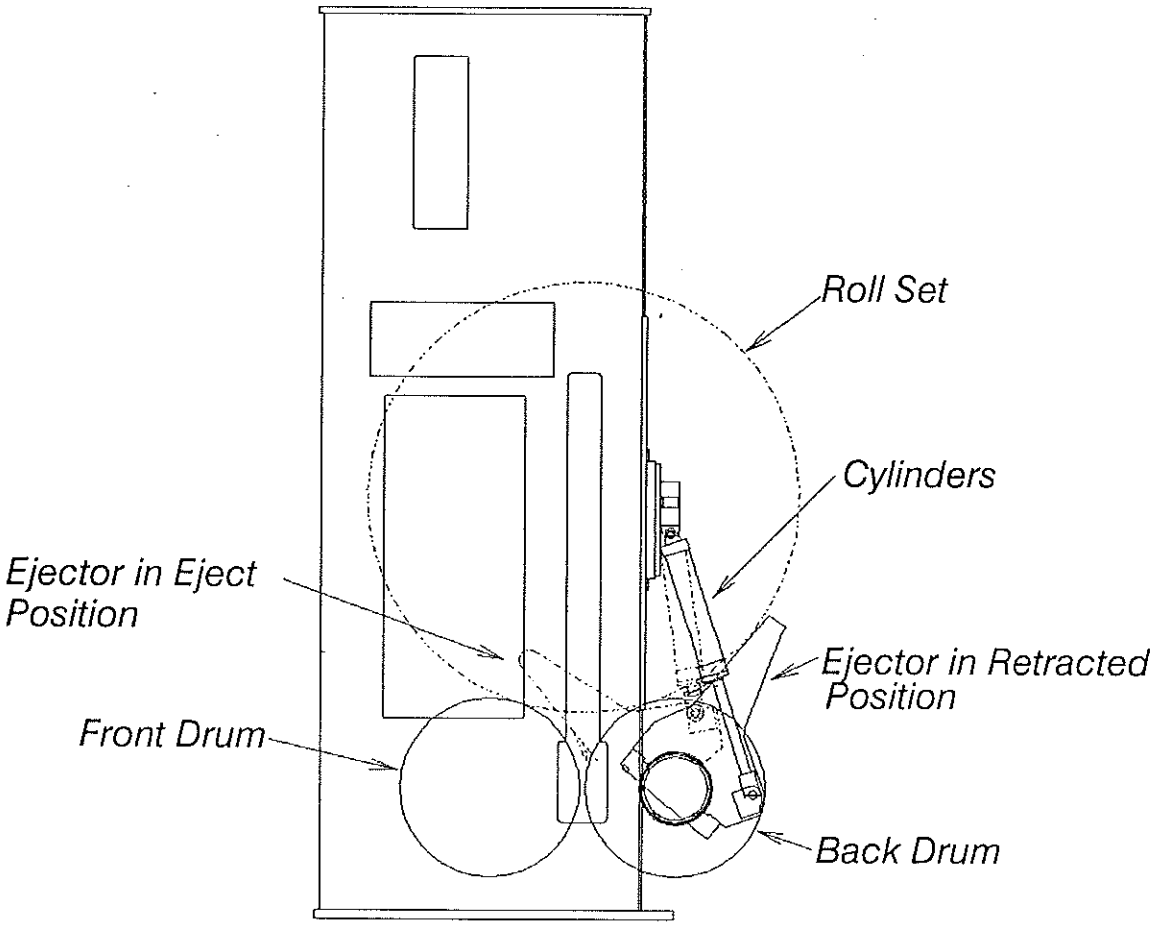

Ejector Operation

⚠ WARNING

Unexpected operation or movement of the ejector can pinch and crush, causing severe injury or death to personnel inspecting, adjusting, or lubricating the equipment. Before starting any work on the ejector shut down the winder; place lockout tags on the controls and alert all personnel in the general area that someone is working on the equipment. Do not operate the ejector until all personnel are out of its operating zone.

The ejector can be operated manually with the ROLL EJECTOR EJECT/RETURN selector switch on Winder Frame Panel 700, but it functions automatically when the Auto Eject sequence is used. During manual operation, the ejector stops at any point in its travel when ROLL EJECTOR EJECT/RETURN switch is released, or when the ejector reaches the extreme-travel limit switch.The ejector can be used to eject rolls twelve inches or larger in diameter from the winding pocket into the cradle, and it can be used to move rolls between eight and twelve inches in diameter to the top of the front drum for removal be hand.

Note: Do not attempt to use the roll ejector to remove rolls that are less than eight inches in diameter. The ejector will crush any cores that are less than that diameter. Such rolls must be removed from the drum pocket by hand.

Interlocks

To operate the ejector, the following interlocks are in force:

- The winder must stopped
- The rider roll must be fully raised.
- The core chucks must be disengaged and fully raised.
- The cradle must be fully raised.
- No E-Stop conditions are in effect.

For descriptions of the roll ejector's use in conjunction with overall winder operation, see "Starting the Winder", "Running the Winder", and "Removing Rewound Rolls from the Winder" in Section 2. For specifications and technical data refer to the drawings and schematics listed under "Reference Drawings And Schematics" below.

Roll Ejector Controls Setting

The recommended initial hydraulic system pressure setting is 1600 psi (system pressure). The final setting is determined during start-up by the Beloit Lenox start-up personnel.

Roll Ejector Reference Drawings And Schematics

Roll Ejector Assy:	50-8048-0012
Hydraulic Schematics:	91-5020-0257
Pneumatic Schematics:	91-5088-0393
Elementary Diagrams:	92-5001-0098

NIP CRADLE

The nip cradle is a drum width fabrication, mounted from the second (front) drum bearings, that pivots around the second drum. It is used to receive the finished rolls pushed from the drum pocket by the ejector and lower them to the floor. The cradle is powered by two hydraulic cylinders attached to the main horizontal cross member. The cradle also acts as a safety barrier: when fully raised, it provides a barrier between the operator and the ingoing nip, and it prevents the paper rolls from accidental ejection from the pocket during winding.

CRADLE OPERATION

The cradle is designed to be used for discharging rolls in conjunction with the auto-eject function or under full operator control with the CRADLE RAISE/LOWER selector switch on Winder Frame Panel 700 (see "Starting After a Set Change: Using Auto Eject" and "Removing Rewound Rolls From the Winder" in Section 2.).

⚠ WARNING

The cradle can hit, trap, or crush, resulting in severe injury or death. Make sure no one is in the cradle's operating area before raising or lowering the cradle. Keep all personnel away from the cradle while it is moving, and stop operation of the cradle if anyone enters its operating zone. Make sure that all safety requirements listed in "General Safety, "Operator Safety" and "Maintenance Safety" have been met before operating the cradle.

Manual Operation of the Cradle

The cradle is raised and lowered with the CRADLE RAISE/LOWER selector on Winder Frame Panel 700. During regular winder operation, the cradle is usually used in combination with the auto eject cycle (see "Cradle Operation with Auto Eject", below). If auto eject is not being used, the CRADLE RAISE/LOWER selector can be used during manual set changes when the following conditions exist:

- The winder is stopped
- The rider roll is fully raised.
- The core chucks are disengaged and fully raised.
- No E-Stop conditions are in effect.
- The hydraulic unit is on.

When the above conditions exist, roll sets can be discharged with the cradle as described in "Removing Rewound Rolls From the Winder" in Section 2 of this manual. If necessary, the cradle can be lowered during the winding cycle without ejecting the roll set from the pocket, providing the winder is fully stopped and the proper tagout warnings have been made to prevent accidental start up.

Cradle Tape Switch

A pressure sensitive tape switch is mounted across the outside face of the cradle. Any pressure applied to this tape switch while the cradle is lowering will stop the cradle's movement. When

this switch has been used to stop the cradle, the CRADLE TAPE RESET button on Winder Frame Panel 700 must be pressed before lowering can be resumed.

Cradle Operation with Auto Eject

The cradle can raised and lowered on a manual basis with the CRADLE RAISE/ LOWER selector on Winder Frame Panel 700 during manual operation. During regular winder operation however, the cradle is usually used in combination with the auto eject cycle to discharge rolls from the winder. During the first part of that cycle – removal of the roll set from the pocket – the cradle, ejector, and roll set automatically move together, in discharge direction, until they come to a stop at a pre-set "hold" position located at a point slightly higher than the fully lowered position. At that point, the 'Lower' position of the selector is used to complete the discharge the of roll set.

For descriptions of unloading procedures, see "Starting After a Set Change: Using Auto Eject" and "Removing Rewound Rolls From the Winder" in Section 2. For use of the unwind in connection with other operating procedures, see "Threading The Winder", also in Section 2.

REFERENCE DRAWINGS AND SCHEMATICS

Cradle Assembly	50-8312-0008
Hydraulic Schematics:	91-5020-0257
Pneumatic Schematics:	91-5088-0393
Elementary Diagrams:	92-5001-0098

DISCHARGE CRADLE CONTROLS SETTING CHART

FUNCTION	RECOMMENDED INITIAL SETTING	FINAL SETTING AT START-UP
CRADLE RAISE PRESSURE (SYSTEM PRESSURE)*	1200 psi	
EJECTOR (SYSTEM PRESSURE)	1200 psi	

CRADLE TROUBLESHOOTING CHART

PROBLEM	POSSIBLE SOLUTION	REFERENCE
Cradle will not lower	a) Check for proper operation and setting of valve WCL-HSV b) Check for proper operation of the pilot check valve mounted to the cylinder.	Hyd. Schem. & Manual
Cradle will not raise	Check for proper operation and setting of valve WCR-HSV	
Ejector will not push	a) Check all interlocks, chucks raised, rider roll raised, cradle up. b) Check for proper operation and setting of valve WREE-HSV	
Ejector will not return	Check for proper operation and setting of valve WRER-HSV	

HYDRAULIC UNIT

This section provides instructions for the operation, troubleshooting, and maintenance of Beloit Lenox hydraulic units. If additional information is needed, contact the Fluid Power groups at Beloit Lenox.

The hydraulic power unit consists of a reservoir that incorporates a baffle, 3/4 NPT sump drain, oil level gage, filter/breather assembly and spare return connections. The pump is coupled to the motor using a flexible shaft coupling and is to be mounted using a bell housing (requires NEMA "C" Motor) and pump/motor mounting plate. Also included on most standard units is a Pump Suction Filter (or Suction Strainer), Relief Valve, and a Pressure Gauge.

Some units have heat exchangers for oil cooling, pressure and return filters, directional valves, and other pressure and flow control valves, or monitoring instrumentation, may have oil immersion heaters.

– NOTICE –

Do not operate the hydraulic unit until all mill personnel involved in the installation, service, and operation of the hydraulic unit have read this section of the manual and are familiar with how the equipment is to be operated; they must understand the limitations of the hydraulic system, its component parts, and have full knowledge of hydraulic safety practices and maintenance procedures. Make sure that all personnel are out of the operating zone and all safety requirements listed in "General Safety" and "Operator Safety", and "Maintenance Safety" have been met before operating this equipment

INSTALLATION PROCEDURES

Observe the following guidelines and refer to the hydraulic schematics when installing the unit.

Unpacking And Checking

The Power Unit was mounted on skid and carefully packed for shipment. Do not remove it from skid until it has been carefully checked for damage occurred during transit. Report all damage immediately to the carrier and send a copy to Beloit. All open ports on the Power Unit were plugged at the factory to prevent the entry of contamination. These plugs must not be removed until piping connections are being made to the unit.

Removing From Shipping Skids

Small "JIC" type power units should be moved with a fork-lift truck, with 2 X 4 boards placed under the reservoir belly to distribute weight and steady the load. Larger "JIC" style units have lifting holes in the reservoir end plates, into which extra-heavy 1-1/2" pipes can be inserted to facilitate handling with a fork-lift truck. L-shaped reservoirs are provided with clearance and cross braces under the base plate for fork-lift truck handling.

Storage

If the Power Unit is not being installed immediately, it should be stored indoors, covered with plastic sheet, and all open ports plugged. If long term storage is expected (6 months or more) we recommend filling the reservoir completely with clean hydraulic fluid to prevent the entry of moisture.

Locating Power Unit

The unit should be installed indoors, preferably in a clean, dry environment with an ambient temperature of 60 degrees to 100 degrees F. The reservoir can be secured to the floor or the base via the mounting holes in the platform supports.

Service Connections

Connect the water supply to the inlet of the heat exchanger with a shut-off valve and strainer. A temperature control valve has been installed on the inlet side. The outlet of the heat exchanger should be connected directly to the drain system. The water flow direction is not important on multi-pass heat exchanger.

Make all pump motor electrical connections to the mill's power source in accordance with the National Electric Code Standards and any applicable codes. Verify that the available voltage is the same as the voltage identified on the motor nameplate.

Note: Most motors have dual voltage ratings. Refer to the motor nameplate to verify that the leads in the conduit box have been connected to the correct mill power voltage supply. If Solenoid valves, pressure/temperature switches or oil immersion heaters have been provided with this power unit, refer to the component name tag or service information in this manual for operating voltage and ratings.

Reservoir Inspection

The reservoir was thoroughly cleaned and coated with oil at Beloit Lenox prior to shipping. It is suggested, however, that you re-inspected for cleanliness before starting up the unit.

Reservoir Filling

Fill the reservoir with clean fluid – Mobil DTE 24 or equivalent. Use the filler cap on the reservoir. The cleanliness of the fluid going into the reservoir is very important, and in some cases, even new oil out of the drum is not clean enough. To ensure that fluid is sufficiently clean, make sure that all fluid is transferred into the reservoir with a transfer pump with a 10 micron filter installed.

– NOTICE –

The type of fluid you use must be compatible with the seals used on the power unit, and must comply with the recommendations of the manufacturers of the component parts. Refer to component manufacturer's catalogs for fluid requirements.

Supply And Return Connections

Complete all necessary interconnecting piping between the power unit and hydraulic actuators. Line sizes should be determined according to oil flow, operating pressure and allowable pressure drop between the power unit and actuator.

One of the key ingredients for good service and long life of a hydraulic system is cleanliness, and since it has been our experience that most dirt infiltrates a hydraulic system during installation, we recommend the following rules be adhered to:
Keep all open ports on the power unit (cylinders, etc.) plugged with tape or plastic plugs until the hydraulic connections are ready to be made.
Make sure that all interconnecting tubing pipe or hose is clean and free of rust, scale and dirt. The ends of all connectors should be kept plugged until they are ready to be installed in the system.

All openings in the reservoir such as the filler breather or access end covers holes must remain closed during installation.

Use a high quality, non-teflon hydraulic pipe sealant on pipe threads.

– NOTICE –

When installing or replacing pressure lines, make sure that only hose or pipe with correct specs and ratings are installed.

Coupling Alignment

Make sure that the pump's motor shaft is aligned correctly. It is possible for pump/motor shaft to be misaligned because of shock incurred during shipping. The alignment should be rechecked before start-up.
Also verify that the coupling halves have adequate clearance and that the coupling set-screws are tight. A slot in the bell housing is provided for this purpose.

HYDRAULIC UNIT START-UP PROCEDURE

Use the following procedure when starting up the unit:

1. Fill reservoir with clean fluid.

2. Open any ball or gate valves in the pump suction line.

3. Back out the system relief valve (CCW) and/or pump pressure compensator adjustment knob out, so that the pressure will be near zero during the initial start.

– NOTICE –

If the power unit has been provided with a variable displacement pump (or any piston pump), the pump case should be filled with clean oil prior to priming. In most cases this can be accomplished by disconnecting the pump case drain line and pouring the oil into the pump case drain port.

4. If the system has been provided with an open center directional valve, the oil during the start-up will flow directly back to tank. If the system has a closed centered valve, it may be necessary to loosen a fitting momentarily at the pump discharge, to bleed any air in the pump during the priming operation.

5. Jog the pump motor once, and verify that the pump is rotating in the same direction as the arrow tag on the pump case. If the direction is incorrect, reverse two (2) of the three (3) motor leads and, with the power disconnected, recheck the rotation.

6. Jog the pump motor three to six times to prime the pump, and allow the pump to run for several minutes at zero pressure. Check the piping for any leaks in fittings and tubing incurred during shipment, and repair them immediately.

7. Use the relief valve and/or pump compensator to gradually increase the pressure.
   Note: On systems with open center directional valves, actuate the valve to build pressure.

8. Continue increasing pressure until normal operating pressure is obtained, re-check the system for leaks, and lock adjustment screws in place.
   Note: For systems with compensated pump & relief valve, adjust valve to approx. 2500 PSI.

9. During the start up sequence, monitor all filters closely. Immediately replace any filter element that goes into a "by-pass" condition. Watch the benchboard fault indicator.

10. After the entire system has been "wetted" with fluid, refill the reservoir to the normal operating level.

11. For units with a heat exchanger, verify that the cooling water to the heat exchanger is flowing. If the unit has been provided with a water control valve, use it to increase the water flow if the oil temperature exceeds 135 degrees F.

MAINTAINING PROPER OIL TEMPERATURE

Hot oil is one of the primary causes of poor operation, component failure and downtime. The oil in your hydraulic system was designed for operation within a specified temperature range. Although you may be able to run it at hotter temperatures for short periods of time without bad effects, continuous operation with oil that's too hot cause the unit to operate poorly, and eventually will cause the failure of key components. Be sure to observe the following oil temperature guidelines.

How Hot Is "Too Hot"?

"Hot oil" is a relative term. In most cases, 120 degrees F at the reservoir is considered an ideal operating temperature. Always take an oil temperature reading at the reservoir, not at a component or any of the piping. Avoid running at temperatures above 130 degrees.

Measuring Oil Temperature

There are several ways to check the temperature of the oil. The best, most accurate method is by means of a thermometer. On some machines, this is mounted on the reservoir. Make it a habit to check the thermometer periodically, after the equipment has been running for more than an hour. If your machine doesn't have a reservoir thermometer, use the "palm test." First check the tank with your fingertip; if it's not too hot to touch, place your palm on the tank. You'll be able to hold it there without discomfort if the oil temperature is about 130 degrees F or below.

Isolating Trouble-Spots

To determine which components are "running hot" and overheating the oil, feel the outlet fittings and lines at the valves, pumps and motors. When oil temperature is normal going into a component but hot coming out, that component is a possible "trouble-spot".

A sticking valve can cause excessive heat. If a spool does not return promptly to the neutral position, the pump flow will be dumped continuously. This builds up heat rapidly.
If a relief valve is set too low, part of the oil will be dumped across the valve with every cycle. This too, generates excessive heat. Even when all valves are set properly, they may not be operating well because of worn orifices or seals.
Always remove and check the hot components first, before the others.

Look, Smell And Feel

Checking oil temperature frequently during daily operation is good preventive maintenance. So too is the practice of periodically taking an oil sample from the reservoir, and comparing it to a sample of clean, new oil.

Oil that has been running too hot will look darker and feel thinner than new oil. It will also smell burned. Chances are, it will also contain more contaminants, because hot oil leads to accelerated wear of component parts.

Oil Temperature Preventive Maintenance Procedures

Use the following procedures to prevent the unit from running to hot.

- Set up a regular schedule for checking the oil temperature, appearance, smell and feel. Change oil as recommended by the equipment manufacturer.
- Be prompt about checking and repairing or replacing valves, pumps or other components that are running hot.
- If relief or flow-control valves are running hot, check and adjust their settings.
- Break in new components gradually. New, close-fitting parts expand at different rates and are especially prone to seize when they get too hot.
- Keep the hydraulic equipment clean. A thick layer of dirt acts as insulation and will cause the system to run hot.
- In hot weather, check and change the oil more frequently than usual. Be sure to use an oil recommended for hot weather operation by the equipment manufacturer or oil supplier.

GENERAL HYDRAULIC UNIT MAINTENANCE

Electric Motors	Lubricate as recommended by the motor manufacturer.
Filters	Change or clean as required or as indicated on filters supplied with visual indicators.
Suction Strainers	Clean after first 10 hours of operation and at 100 hour intervals thereafter.
Reservoirs	Maintain oil levels at all times. The oil should be checked after the first 100 hours of unit use. Verify that the filtration class of the oil meets the requirements of the pump being used. Change the oil every 1000 to 2000 hours, depending on the application and operation environment.
Components	See component vendor documentation.

Recommended Spare Parts

Spare filter elements should be purchased with the power unit and be kept available during the start-up operation. Other spare parts may be required, as needed, depending on the duty cycle of the hydraulic system and the mill's operating environment.

Special Tools

All normal service and maintenance on standard power units can be accomplished with standard hand tools. No special tools are required.

Preventive Maintenance: Filter Service

Filters must be maintained on a regular basis. Even if a machine has the best filters available, failure to keep them clean will render them useless: A filter that gets dirty after five days of service and is cleaned 30 days later, provides 30 days of non-filtered service. Use the following guidelines for servicing filters:

- Change filter elements immediately after any indication of clogging.
- Inspect filter elements that have been removed from the system for signs of failure (or impending failure) to determine whether the service interval needs to be shortened.
- Do not re-use fluid that has leaked out of the system.
- Keep the supply of fresh fluid covered tightly.
- Use clean containers, hoses, and funnels when filling the reservoir. Use of a filter cart when adding oil is highly recommended.

- Use common sense precautions to prevent entry of dirt into components that have been temporarily removed from the circuit.
- Make sure that all clean-out holes, filler caps, and breather cap filters on the reservoir are properly fastened.
- Do not run the system unless all normally provided filtration devices are in place.
- Make certain that the fluid used in the system conforms to the specifications and recommendations provided by the manufacturers of system components.
- Some manufacturers offer an oil sampling kit which can be used to ascertain the condition of the system fluid.

HYDRAULIC UNIT TROUBLESHOOTING CHART

Dirty Oil	Components not properly cleaned after servicing.
	Air breather left off after filling with oil. Check for damage and correct installation.
	Tank not properly gasketed.
	Pipe lines not properly covered while servicing machine.
	Filter dirty or ruptured.
Foaming Oil	Return of tank line not below fluid level.
	Fluid contaminated with incompatible foreign matter.
	Suction leak to pump aerating oil.
	Lack of anti-foaming additives.
Moisture in Oil	Cooling coils not below fluid level.
	Cold water lines in contact with hot tank, causing condensation within tank.
	Extreme temperature differential due to geographical location.
System Overheating	Water shut off or heat exchanger clogged.
	Continuous pump operating at relief setting, stalling under load. Check for fluid viscosity too high or too low.
	Excessive slippage or internal leakage: check for stall leakage past pump, motors and cylinders.
	Case drain line from pressure compensated pump returning oil too close to suction line. (Re-pipe case drain line to opposite side of reservoir.)
	Pipe, tube or hose I.D. too small causing high velocity.

HYDRAULIC UNIT TROUBLESHOOTING CHART

	Improper air circulation around reservoir.
	System relief valve set too high.
	Power unit operating in direct sunlight; ambient temperature is too high.
Foreign Matter In The System	Pipe scale not properly removed.
	Sealing compound (pipe dope, teflon tape) allowed to get inside fittings.
	Improperly screened fill pipes and air breathers.
	Burrs inside piping.
	Components left uncovered while repaired; open lines left unprotected.
	Wipers or boots not on cylinders or rams where necessary.
	Repair parts and replacement components not properly protected while stored in repair depot. (Rust and other contaminants.)
Excessive Pump Noise	Check for vacuum leaks in the suction line.
	If the pump is internally drained, check for vacuum leaks in the pump shaft seal, flooding connections with the fluid being pumped may cause the noise to stop or abate momentarily and will help locate the point of air entry.
	Check pump alignment with drive mechanism. Misalignment will cause wear and subsequent high noise level in operation.
	Check component manufacturers specifications relative to indications and identification of wear as high operating noise level, etc.
	Check compatibility of fluid with component manufacturers recommendations.

HYDRAULIC UNIT TROUBLESHOOTING CHART

Relief or unloading valve set too high. Use reliable gauge to check operating pressure. Relief valve may have been set too high with a damaged pressure gauge. Check various unloading devices to see that they are properly controlling the pump delivery.

Aeration of fluid in reservoir (return lines above fluid level).

Worn or sticking vanes (vane type pump).

Worn cam ring (vane type pump).

Worn or damaged gears and housing (gear pump).

Worn or faulty bearing.

Reversed rotation.

Cartridge installed backwards or improperly.

Plugged or restricted suction line or suction strainer.

Plugged reservoir filter breather.

Oil viscosity too high or operating temperature too low.

Air leak in suction line or fittings also causing irregular movement of control circuit.

Loose or worn pump parts.

Pump being driven in excess of rated speed.

Air leak at pump shaft seal.

Oil level too low and drawing air in through inlet pipe opening.

Air bubbles in intake oil.

Suction filter dirty.

Suction line too small or too long.

Pump housing bolts loose.

HYDRAULIC UNIT TROUBLESHOOTING CHART

Pump Fails To Deliver Fluid	Low fluid level in reservoir.
	Oil intake pipe suction strainer plugged.
	Air leak in suction line and preventing priming.
	Pump shaft turning too slowly.
	Oil viscosity too high.
	Oil lift too high.
	Wrong shaft rotation.
	Pump shaft or parts broken.
	Dirt in pump.
	Variable delivery pumps. (improper stroke.)
Oil Leakage At Pump	Shaft seal worn.
	Pump housing bolts loose or improperly torqued.
	Case drain line restricted. (Shaft seal leaking).
Excessive Pump Wear	Abrasive dirt in the hydraulic oil.
	Oil viscosity too low.
	System pressure exceeds pump rating.
	Pump misalignment.
	Air being drawing in through inlet of pump.
	Solid matter being drawn into pump from reservoir.

HYDRAULIC UNIT TROUBLESHOOTING CHART

Pump Parts Broken	Seizure due to lack of oil.
	Excessive system pressure above maximum pump rating.
	Excessive torquing of housing bolts.
Solenoid Failures	Voltage too low. If voltage will not completely shift the solenoid, it will burn out the coil.
	Signal to both solenoids of a double solenoid valve simultaneously. One or both of the solenoids will be unable to complete their stroke and will burn out. (Make certain the electrical signal is interlocked so that this condition cannot exist).
	Mechanical damage to leads. (Short circuit, open connections, etc.)
	Tight spool or other mechanical parts of the valve being actuated can prevent the solenoid from completing its stroke and subsequently burning out.
	Replacement springs too heavy in valve. Overloads solenoid and shortens life.
	Wrong voltage or frequency will prevent operation. Because low voltage may be inadequate to handle the load; high voltage can burn out the coil.
	Dirty contacts may supply insufficient current to solenoid to satisfy "in rush" demands.
Solenoid Valves Do Not Operate	Is there an electrical signal to the solenoid operating device? Is the voltage too low? (Check with voltmeter. Use a test light in emergency.)
	If the supply to the pilot body is orificed, is the orifice restricted? (Remove orifice and check for foreign matter. Flushing is sometimes necessary because of floating impediment).
	Has foreign matter jammed the main spool? (Remove end caps and see that main spool is free in its movement. Remember that there will be a quantity of fluid escaping when the cap is removed and provide a container to catch it.)

HYDRAULIC UNIT TROUBLESHOOTING CHART

Is pilot pressure available? Is the pilot pressure adequate? (Check with gauge on main pressure input for internally piloted types and in the supply line to the externally piloted type.)

Is pilot drain restricted? (Remove pilot drain and let the fluid pour into an open container while the machine is again tried for normal operation. Small lines are often crushed by machine parts banging against them causing a subsequent restriction to fluid flow).

Is pilot tank port connected to main tank port where pressures are high enough to neutralize pilot input pressure? (Combine pilot drain and pilot tank port and check for operation with the combined flow draining into an open container. If this corrects the situation, reroute pilot drain and tank line).

Are solenoids improperly interlocked so that a signal is provided to both units simultaneously? (Put test light on each solenoid lead in parallel and watch for simultaneous lighting. Check electrical interlocks. This condition probably burns out more solenoids than any other factor).

Has mounting pad been warped from external heating? (Loosen mounting bolts slightly and see if valve functions. End caps can also be removed and check for tight spool).

Is fluid media excessively hot? (Check for localized heating which may indicate an internal leak. Check reservoir temperature and see if it is within machine specifications).

Is there foreign matter in the fluid media causing gummy deposits? (Check for contamination. Make certain seals and plumbing are compatible with the type of fluid being used).

Is an adequate supply of fluid being delivered to actuate the load? (Many times there is sufficient pressure to shift the valve but not enough to actuate the work load. Check pump supply pressure and volume if necessary. Physical measurement of flow through relief valve with units blocked may be necessary.)

Section 4. Winder Maintenance

MAINTENANCE SAFETY

When performing maintenance on the winding system, supplement your regular mill safety procedures with the following rules:

- Tag out or lock out all drives and controls before performing any maintenance or clean-up work. Read "Lockout/Tagout Procedures" in this manual.
- Do not depend on hydraulic or pneumatic devices to hold machine parts in a raised position while performing maintenance. Always block up or restrain these parts with an appropriate mechanical device.
- Inspect all chains and clevis pins at frequent intervals for wear and damage. Block under or around units raised by chains when performing maintenance.
- Inspect slings and cables for worn or weak spots before using them. Keep all personnel clear of loads when they are being lifted.
- Use the lifting points as specified by the manufacturers. Where provisions have been made for lifting eyes to be screwed into a tapped hole, make certain that eyebolts are tightened to the shoulder and that the eyes are parallel to the lifting plane.
- Tie slings securely when attempting to lift machine components to prevent the sudden rotation of out-of-balance pieces.
- Relieve pressure from oil and air lines before disassembly.
- Use proper precautions when applying hydraulic removal equipment to bearings, heads, gears, etc. Such items can move at high rates of speed if they have broken loose from the fit.
- Fix hydraulic/pneumatic leaks immediately.

– NOTICE –

Do not attempt to maintain, repair, or operate the winder without reading the following sections of this manual: "Lockout/Tagout Procedures", "General Safety", "Operator Safety", and "Danger, Warning, Caution, and Notice as Used In This Document".

LOCKOUT/TAGOUT PROCEDURES

Lockout/tagout procedures are used to ensure that winder controls, devices, and components are prevented from unexpected energization, startup, or release of stored energy while maintenance or service personnel are at work on the winder. Most mills today have their own lockout procedures for mill equipment, but the complexity of a winder's control system may require revision of those procedures to accommodate the many devices that require simultaneous control during operation of winder equipment. Be sure to incorporate winder lockout/tagout procedures, as described in below, into the safety program at your mill.

– NOTICE –

It is imperative that your winder safety program include thorough training of personnel in lockout/tagout procedures as outlined in ANSI Z244.1. All such training and procedures must meet the requirements of OSHA 29 CFR , parts 1910.147 and 1910.261, and their rules must be strictly enforced. Never attempt to operate a control, switch, valve or other device when it is locked or tagged out. The procedures below should always be followed whenever repair, service, or maintenance of the winder is to be performed.

1. Locks, tags and multiple locking devices must be provided as needed. "Men Working on Machinery" tags should be used to describe conditions or repairs being performed and must be signed and dated by the person responsible.

2. Only one key is allowed per safety lock.

3. Each safety lock should be obviously different from any others on the job.

4. The locks are to be used only to lockout the winder at its circuit breaker, the MCC Drive disconnect, or, with the use of chains or other safety lockout devices, to lock valves, controls, or other devices that control any part that is to be inspected, serviced, or repaired.

5. If more than one person is working on the same component, control, or device, each of those people must place their own lock on the control device of that part. No one is to assume that another person's lock will protect him. When the control device does not accommodate all locks, a multiple locking device must be used.

6. When multiple locking devices are used, their shanks must not be attached to other lockout devices, but must be attached directly to the control device that will immobilize the equipment.

7. Before work commences, and after the entire area has been inspected to make certain all personnel are safely clear and have been advised of the procedures to be performed, one person must make certain that the equipment is immobilized by trying to start the equipment with the lockout in place.

8. If anyone on the job has doubt as to the location of switches, lockout procedures, or has any other question pertaining to the job, work must stop and all questions must be answered and uncertainties removed by authorized supervisory personnel, who must also make sure that the work area is reinspected for safety before work is resumed.

9. When work recommences, the procedure in step 7 must be followed again.

10. If it becomes necessary to operate the winder or its components during repair, the following practices must be followed before the equipment is energized:

    - The area and equipment must be inspected for safe operation.

    - One person must be designated to operate the equipment.

    - A second person must be designated to prevent other personnel from approaching or entering the area while the equipment is being energized.

    - Locks must be removed only by the personnel who originally attached them.

    - A final check must be made to ensure that all personnel are clear before energizing the equipment.

11. Upon completion of the job, each person must remove his lock and notify the supervisor that the job has been completed.

12. In the event that someone forgets to remove their lock for startup, that individual, and only that individual, should be contacted and requested to remove the lock. If that person cannot be found or cannot return to the job, the lock must not be removed until the supervisor in charge has inspected the area, found the equipment to be safe to operate, and given his authorization to remove the lock. The safety department must be notified of the lock's removal and the related circumstances.

    Note: Removal of a lock as described in step 12 should only be used as a last resort. Errors made in unlocking procedures can result in serious injury or death.

13. In the event that conditions exist that prevent the equipment from being set up for lockout with the procedures listed in this section, fuses should be pulled, wires disconnected, or other methods used to disable the equipment. Tags should be attached in obvious places to prevent accidental start-up.

14. If the repairs requiring lockout have not been completed by the end of the shift, it is the responsibility of the personnel of the current crew to so inform the supervisor before they remove their locks. The supervisor must then immediately install his lock to prevent any use of the equipment until the next crew arrives to commence their own lockout procedure.

ROUTINE INSPECTION/ADJUSTMENT

1. Inspect all limit switches and valves for evidence of damage or malfunction.

2. Inspect pneumatic cylinders. Schedule rebuild or replacement if required.

3. Inspect all pneumatic connections for leaks. Schedule immediate repair of any connections found to be leaking.
4. Operate manual controls or valve overrides to make sure all motions occur smoothly and without interruption. Compare pressure settings to values recorded at start-up. Adjust flow rates if required.

5. Inspect the cradle and ejector bushings for wear. Schedule replacement if necessary.

6. Make sure that threaded fasteners have not vibrated loose.

7. Inspect any winder parts that move in metal ways, e.g., core chucks and rider roll. Excess clearance will result in uneven edges on rewound rolls. The rider roll and coreslide assemblies are equipped with adjustable rollers for this purpose.

ROUTINE LUBRICATION

If this winder is equipped with a B-Shur Lubrication system, see the B-Shur Appendix. Unless otherwise noted, use Grease 'B' and Oil 'C' as described in the BELOIT lubrication chart.

1. Grease or oil, as appropriate, the mounting bearings for the paper rolls, spreader rolls (if applicable), rider roll, drums and unwind shafts/clutch. Check bearings for excessive heat or noise.

2. Grease core chuck spindle assembly.

3. Check oil level in drive gearbox, pneumatic system lubricator, and unwind E-Stop brake bearings; add oil if necessary.
4. Grease the ejector and cradle pivot bearings.

5. Grease DC Drive motor bearings per manufacturers recommendations.

ROUTINE CLEANING

1. Clean/replace pneumatic and hydraulic filter elements.
2. Clean dust and debris away from the core chucks. Clean the core chuck spindle/sleeve threads. Grease fitting access hole.
3. If the front drum is coated, clean with soap and water to maintain drum abrasiveness.
4. Clean lens of "web break" photocell.

ALIGNMENT

With the passage of time, the close tolerances that were set when the winder was installed will begin to deteriorate. To keep the machine operating at peak performance, alignment of the following components should be rechecked at least once every two years (preferably once each year), depending on the amount of usage. Use the following procedure (refer to the Alignment Appendix for supplementary information if necessary):

1. Check that the rider roll is level with the winder drums. Use the following procedure:

   a. Position two bearings in the drum pocket, locating one each at the extreme ends.

   b. Lower the rider roll until it touches both bearings.

   c. Adjust the gear pack so that the rider roll is supported by both gears. The gap should not exceed .020 inches.

2. Check that the rider roll is centered between the drums. Use the following procedure:

   a. Position four 1-1/2" square lengths of keystock, 8" to 12" long, two at each end of the drums, forming a 'V', so that they will support the rider roll, centered between and over the drums.

   b. Lower the rider roll onto the keystock. Be careful that the downward ends of the keystock pieces do not contact the opposite drum, which can cause the rider roll to go off-center.

   c. Relieve the pressure on the cylinders. Loosen the set screws and adjust the cam rollers so that they touch the frameways.

   d. With the cam rollers adjusted, retighten the set screws. Raise the rider roll and remove the keystock.

3. Check that the chucks are level and centered on the winder drums.

   a. Remove the core chucks and extend the screw adjustment to its maximum extension.

   b. Remove the core stop and lower the coreslide so that the body of the screw is cradled between the drums.

   c. Loosen the set screws and adjust the cam rollers so that they touch the frameways.

   d. Retighten the set screws, raise the coreslides, and reassemble the chucks and core stop.

WINDER LUBRICATION RECOMMENDATIONS

This section provides specifications and general recommendations for the types and grades of lubricants to be used for BELOIT machinery. Refer to it and work closely with a reliable lubricant supplier in order to select the best oil or grease for each application. Do not mix brands of lubricants without consulting your supplier; the ingredients used in some lubricants may not be compatible with others, and they may produce destructive results when mixed in a way not intended by the manufacturers. For recommendations on any lubricants not listed below, consult operation manuals, lubrication plates, or drawing instructions. For additional information, contact your BELOIT Representative.

Abbreviations used in this manual are as follows:

NLGI -National Lubricating Institute
SUS -Saybolt Universal Seconds
CS -Kinematic Viscosity Centistokes
AGMA -American Gear Mfg. Assn.

B-Shur Lubrication System

If this winder is equipped with a B-Shur Lubrication system see the B-Shur Appendix.

BELOIT Lenox Hydraulic Unit

If this winder is equipped with a BELOIT Lenox hydraulic unit, see "BELOIT Lenox Hydraulic Unit" in Section 3.

Grease Selection

Bearings operating in dry-end applications require greases with specifications different than those used for wet-end applications. Use the following guidelines when selecting bearing greases.

Dry End Grease Lubricated Bearings - Grease B

- Lithium, Soda base, or equivalent grease, NLGI No. 2 consistency
- Worked penetration 265 - 295 at 77^0 F. (25° C)
- Good stability in temperatures up to 300° F. (148° C)
- Afford protection against rusting during shut-down periods

Note: It is recommended that the oil in the above greases have a minimum viscosity of 600 SUS at 100° F. (130 CS at 38° C).

Grease-Lubricated Bearings - Wet End Applications

- Soft lime, lithium or equivalent type pressure gun grease, NLGI No. I consistency
- Worked penetration of 310 - 340 at 77° F. (25° C)
- Capable of being retained in the bearing housing in the presence of trace or large quantities of water with minimum change in structure
- Must lubricate and protect the bearing against rusting in the presence of moisture or clean-up chemicals under operating temperatures which may range from 50 to 200 ° F (10 - 94° C)

GREASING INSTRUCTIONS

For winders with B-Shur lubrication system, see the B-Shur Appendix .

Add fresh grease to bearings weekly, or at other reasonable intervals. When machine has been shut down, with bearings at standstill, remove drain plug and allow accumulated moisture or emulsified grease to run out. A soft copper wire loop inserted in the drain opening will clear out old, hardened grease and will produce a sample for inspection.

Do not over-grease. A bearing two-thirds full is ideal. A bearing completely full will run hot until excess grease is forced out. Grease extruding around the journals indicates over-greasing. Reduce future amounts accordingly. If intervals between greasing cycles are excessive, consult your lubricant supplier. For more additional instructions, see lubrication plate.

OIL SELECTION

If this winder is equipped with a BELOIT Lenox hydraulic unit, see "BELOIT Lenox Hydraulic Unit" in Section 3 for additional information and follow the guidelines below:

- For Sump Lubricated and Continuous Lubricated Plain Bearings and Anti-Friction Bearings, use Oil C

  Note: For sump lubricated bearings, the oil level should be maintained at the top of the oil level inlet fitting when regular inspection is made with the bearing not running. Consult your supplier for specific oil characteristics.

- High grade petroleum oil having excellent anti-rust, anti-oxidation, and film strength or load bearing qualities with a high viscosity index that will maintain a minimum oil viscosity of 150 SUS (32 CS) at the maximum bearing temperature.
- Detergent or non-detergent optional.
- 500 - 700 SUS oil measured at 100° F. (108 - 151 CS at 38° C) for machines operating at moderate conditions where oil temperature may be maintained in a 130 - 140° F. (54 - 60° C) range at the tank. General maximum oil temperature from bearing is 160° F. (71° C).

- 800 - 1000 SUS oil measured at 100° F. (173 - 216 CS at 38° C) for machines running continuously at high ambient temperatures with oil in a 150 - 160° F. (65 - 72° C) range at the tank. General maximum oil temperature from the bearing is 175° F. (79°C).

Worm Gear Units - Oil D

- High grade compounded steam cylinder oil or its equivalent.
- Viscosity of approximately 140 SUS at 210° F. (30 CS at 99° C).
- Hypoid, Spiral, Differential and Parallel Shaft Gear Units - Oil E

  (Refer to Oil E Selection Chart)

- Select oil viscosity from accompanying chart. If the unit is lubricated from a drive unit circulation system with oil cooler, the viscosity should be selected under the ambient air temperature heading of 50 - 90° F.
- In those applications where the gear units operate at varying speeds, select the viscosity based upon the lowest operating speed.
- If operating speeds are consistently less than 1/2 the minimum speed listed, it may be desirable to select an oil of the next higher viscosity.
- If oil temperature in the unit consistently exceeds 160° F. (71° C) external cooling may be required.

Slitter Bearings, Air Lubricators Wood Plug or Moccasin Bushings - Oil F

- Petroleum oil with a viscosity of 150-200 SUS at 100° F (32-43 CS at 38° C).

Gear Drive Units - Oils D, E, and F

High grade rust and oxidation inhibited petroleum based lubricating oil meeting the current AGMA specifications for lubrication of Enclosed Gear Drives. (AGMA 250.03)

OIL E SELECTION CHART

Hypoid Pinion Speed RPM	Spiral Pinion Speed RPM	Differential Lineshaft Speed RPM	Parallel Shaft Pinion Speed RPM	3100 & 4000 Series Pinion Speed RPM	Viscosity 100° F. (38° C.) 50 - 90° F. 10 - 32° C. Ambient Air Temperature	Viscosity 100° F. (38° C.) 90 - 125° F. 32 - 52° C. Ambient Air Temperature
			Above 750		400 - 500 SSU 86 - 108 CS	600 - 750 SSU 129 - 162 CS
Above 400*	Above 300*	Above 500*	250 - 750	Above 500*	600 - 750 SSU 129 - 162 CS	900 - 1150 SSU 194 - 249 CS
200 - 400*	Below 300*	Below 500*	Below 250*	Below 500*	900 - 1150 SSU 194 - 248 CS	1300 - 1600 SSU 280 - 346 CS
Below 200*					1300 - 1600 SSU 280 - 345 CS	1600 - 2000 SSU 345 - 432 CS

* - "Mild" extreme pressure additive suggested. (Mild EP")

LUBRICATION CHART

Item	Lubricant*	Frequency	Remarks
Bearings a. Winder drums† b. Rider roll† c. Paper roll† d. Unwind brakes	Oil "C"	Check level weekly	Sump bearings: Each 6 month, drain and flush with kerosene or light oil. Replace plug and refill.
Bearings a. Winder drums‡ b. Rider roll‡ c. Paper roll‡ d. Cross shaft Roll Ejector Lowering cradle Sliding Clutch Mechanism	Grease "B"	Weekly	Greased bearings: Usually present only on older equipment which operates at lower speeds and loads.
Sectional Slitter rolls	Grease "B"	Every 6 months or major down time	Hand pack grease into and around bearing such that 20% of cavity of assembled bearing is filled. Do not overfill.
Hydraulic Chucks	Oil "C"	Weekly	
Slideways‡ (Not Anti-Friction)	Mixture of Mineral Oil and Molylube	Weekly	Slideways and slides should be wiped clean before coating with fresh lubricant
Chains and sprockets	Oil "C"	Monthly	Apply small quantities at bearing points
Air Cylinder Lubricators	Oil "F"		Keep filled and allow 3 to 5 drops per stroke to enter system
Slitters	Oil "F"	Weekly	3 to 5 drops of oil

*Detail specifications are per Beloit Lubrication 1-21-127
†May be continuous lube or sump lubrication
‡Thomson roundway slides, ball bushings and Saginaw ball bearing slides should not be lubricated. If discoloration, due to rust, becomes evident they can be wiped with a slight film of oil.

Appendices

(This Page Left Blank)

Alignment of Ways

Perpendicular to rider roll and core shaft slides in the cross-machine direction (figure 11-3b).

1. Tolerance
   a. .001 in./ft.
   b. .005 in. maximum

2. Test Equipment - Optical alignment equipment

3. Procedure
   a. Measure distance A
   b. A to be within tolerance

4. Correction - Reposition way by shimming

5. Associated Problems
   a. Vibration
   b. Excessive slide wear

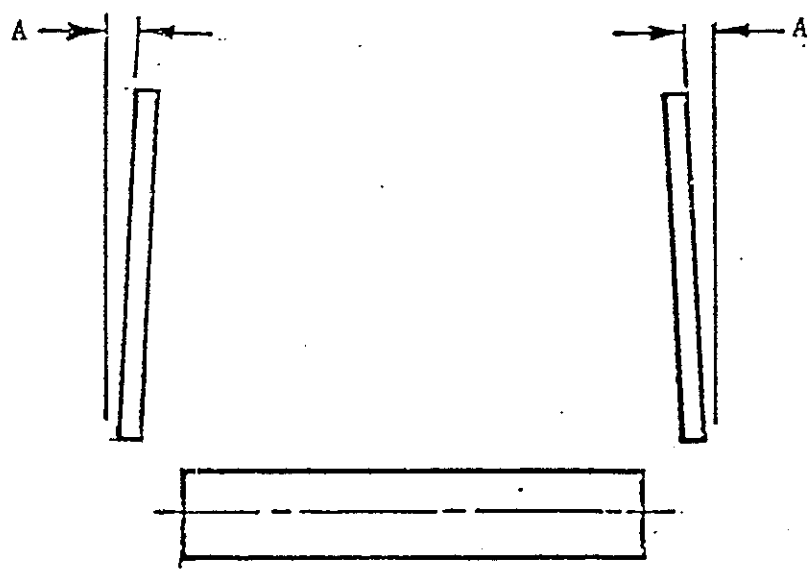

Figure 11-3b. Ways Perpendicular to Rider Roll and Core Shaft

Perpendicular in the in-machine direction (figure 11-3c).

1. Tolerance - .015 inch

2. Test Equipment - Optical alignment equipment

3. Procedure
   a. Measure A
   b. A to be within tolerance

4. Correction - Reposition way

5. Associated Problems
   a. Vibration
   b. Excessive slide wear

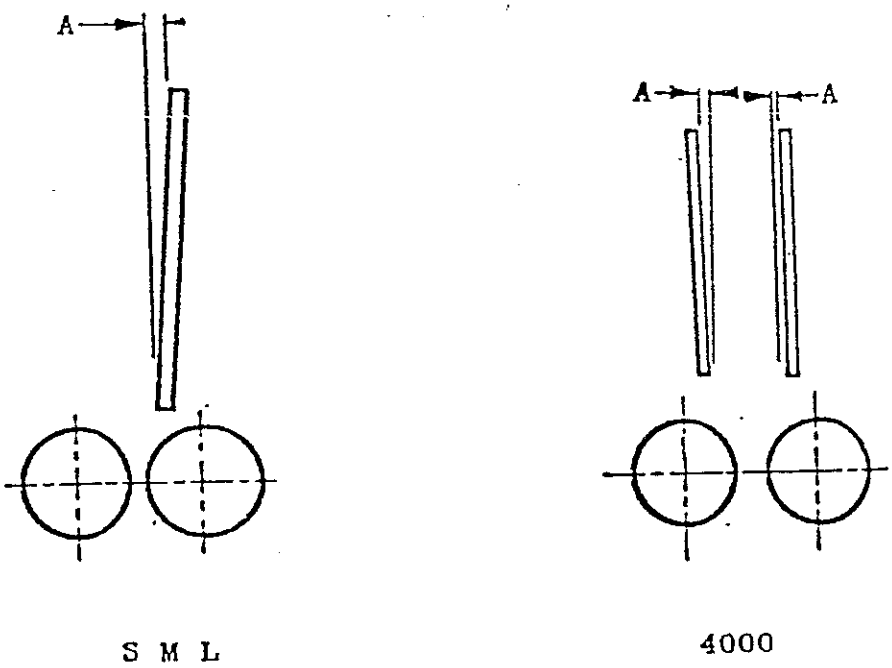

Figure 11-3c. Ways Perpendicular In-Machine Direction

Ways parallel to each other in in-machine direction (figure 11-3d.

1. Tolerance
   a. .005 in./ft. of way
   b. .015 maximum

2. Test Equipment - Optical alignment equipment

3. Procedure
   a. Measure A and B
   b. Difference between A and B should be within tolerance

4. Correction - Reposition way

5. Associated Problems
   a. Vibration
   b. Excessive slide wear

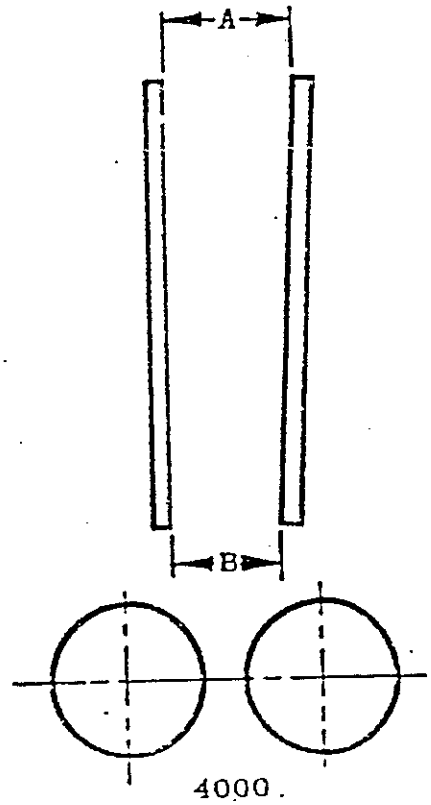

Figure 11-3d. Ways Parallel to Each Other

Winder Drum Alignment

Cross-Machine Level (figure 11-3e).

1. Tolerance
   a. .002 in./100 in. face
   b. .005 maximum

2. Test Equipment - Optical alignment equipment

3. Procedure
   a. Measure A at 90° intervals of rotation
   b. Average reading not to exceed tolerance
   c. Repeat the above for opposite end

4. Correction
   a. Shim under bearing housing
   b. Do not dowel drum bearing housing until indicated
   c. Take care so as not to misalign drive and drums

5. Associated Problems
   a. Offsets
   b. Dishing
   c. Interweaving
   d. Thrust bearing wear
   e. Poor starts
   f. Wrinkles
   g. Core chuck bearing failure

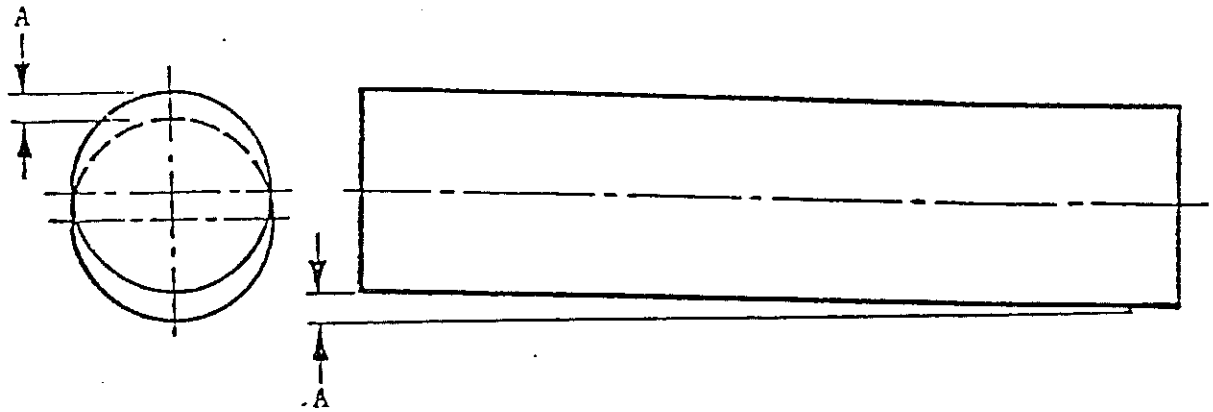

Figure 11-3e. Winder Drums Level in Cross-Machine Direction

In-machine Level (figure 11-3g).

1. Tolerance .005 inch
   a. .001 inch/100 inch face
   b. .003 inch maximum

2. Test Equipment - Optical alignment equipment

3. Procedure
   a. Measure A at 90° intervals of rotation
   b. Average reading not to exceed tolerance
   c. Repeat the above for opposite end

4. Correction
   a. Reposition second drum bearing housing
   b. Do not dowel drum bearing housing until indicated

5. Associated Problems
   a. Offsets (near core)
   b. Interweaving (near core)
   c. Poor start
   d. Wrinkles
   e. Loose cores
   f. Dishing

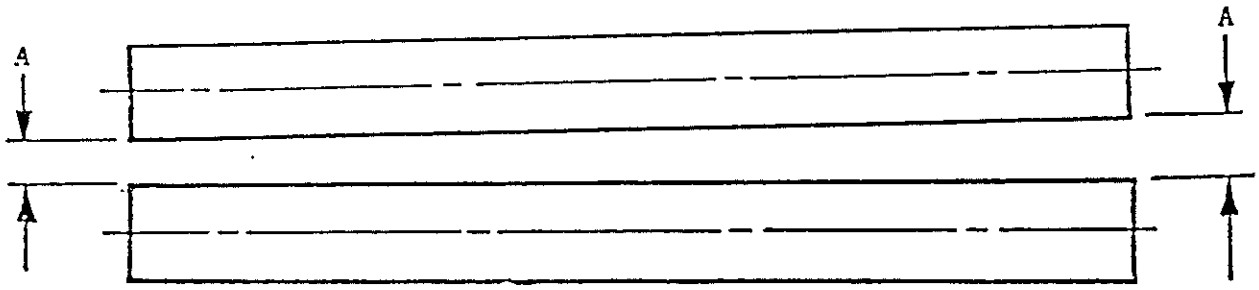

Figure 11-3g. Winder Drums Parallel to Each Other

Rider Roll Alignment

Rider roll level with drums (figure 11-3h).

1. Tolerance
   a. .002 inch/100 inch face
   b. .007 maximum

2. Test Equipment - Two bearings (approximately 5 inch O.D.) and feeler gauge

3. Procedure
   a. Place the two bearings in the pocket between the drums - one front and one back.
   b. Lower rider roll until it barely touches the bearings.
   c. Make sure rider roll doesn't drift.
   d. Measure gap between bearings (front & back).
   e. Difference between front and back measurement should be within tolerance.

4. Correction - Adjust level with eyebolt where the rider roll chain connects to the rider roll slide.

5. Associated Problems
   a. Offsets
   b. Wrinkles
   c. Dishing
   d. Poor starts

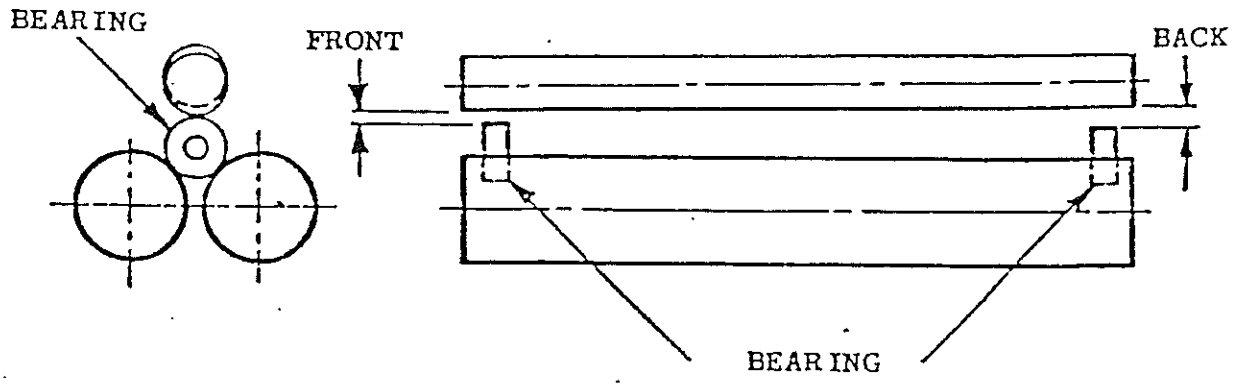

Figure 11-3h. Rider Roll Level with Drums

Sectional Rider Roll Centered with Drums (figure 11-31).

1. Tolerance - .010 inch.

2. Test Equipment - Feeler gauge

3. Procedure
   a. Lower rider roll to within .250 from drums. (Be careful rider roll doesn't drift.)
   b. Measure A and B with feeler gauge (front and back).
   c. Difference between A and B should be within tolerance.

4. Correction
   a. Reposition drum bearing housing.
   b. Do not dowel drum bearing housing until indicated.

5. Associated Problems
   a. Bursts
   b. Wrinkles
   c. Loose cores
   d. Rider roll vibration
   e. Excessive slide wear

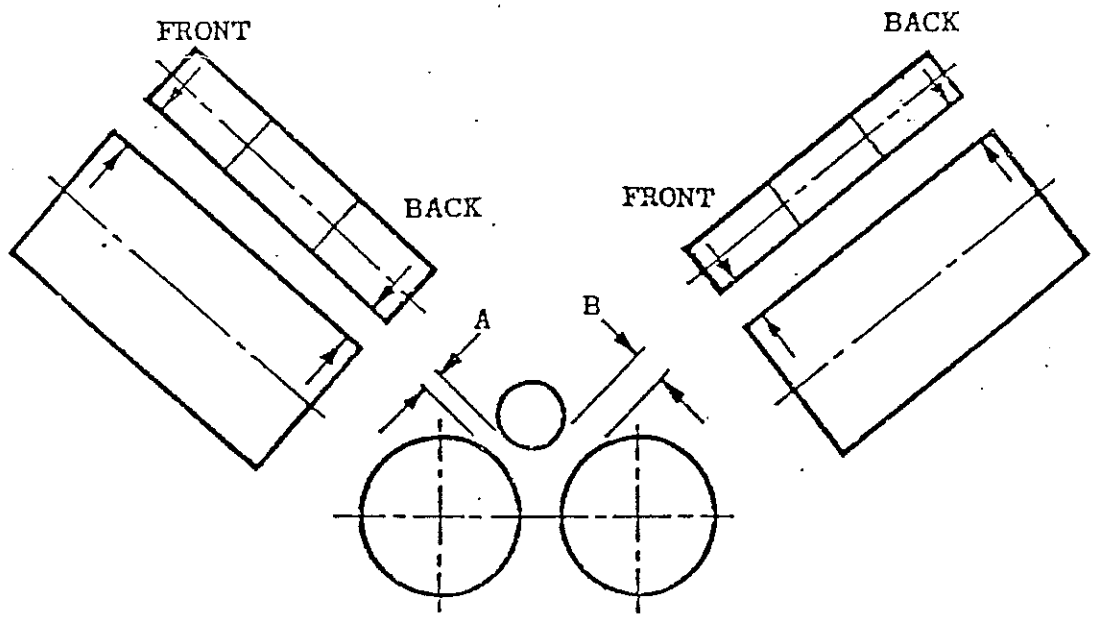

Figure 11-31. Sectional Rider Roll Centered with Drums

Rider Roll Parallel with Drums (figure 11-3j).

1. Tolerance
   a. .002 inch/100 inch face
   b. .005 maximum

2. Test Equipment - Optical alignment equipment

3. Procedure
   a. Measure A and B. (Use 1st drum as datum and be careful rider roll doesn't drift.)
   b. Difference between A and B should be within tolerance.

4. Correction
   a. Reposition drum bearing housing.
   b. Do not dowel drum bearing housing until indicated.

5. Associated Problems
   a. Corrugations
   b. Wrinkles
   c. Soft starts
   d. Vibration
   e. Offsets

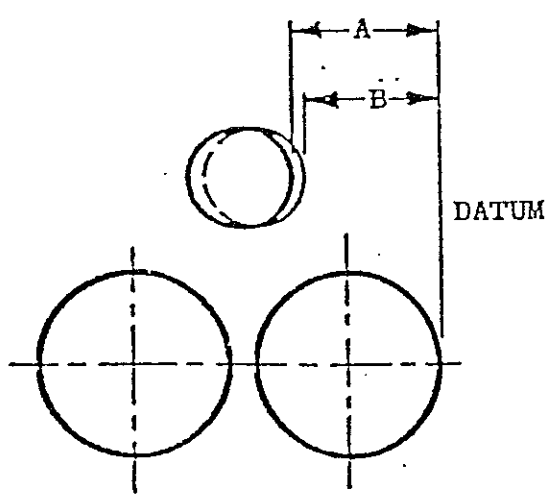

Figure 11-3j. Rider Roll and Core Shaft Parallel with Drums

Sectional Rider Roll Alignment

Rider Roll Segments Level (figure 11-3k).

1. Tolerance
   a. .002 inch for intermediate bearing support
   b. .002 inch/100 in. face for opposite ends of roll assembly
   c. .007 inch maximum

2. Test Equipment - Optical alignment equipment

3. Procedure
   a. Take measurements at 90° points of rotation and use average value for comparison.
   b. Measure A and B at intermediate bearing supports.
   c. Average difference between A and B should be within tolerance.
   d. Measure C and D at opposite ends of the roll assembly.
   e. Difference between C and D should be within tolerance.

4. Correction
   a. Shim above bearing housing on intermediate bearing supports.
   b. Adjust overall level with eyebolt where the rider roll chain connects to the rider roll slide.

5. Associated Problems
   a. Offsets
   b. Wrinkles
   c. Dishing
   d. Poor starts

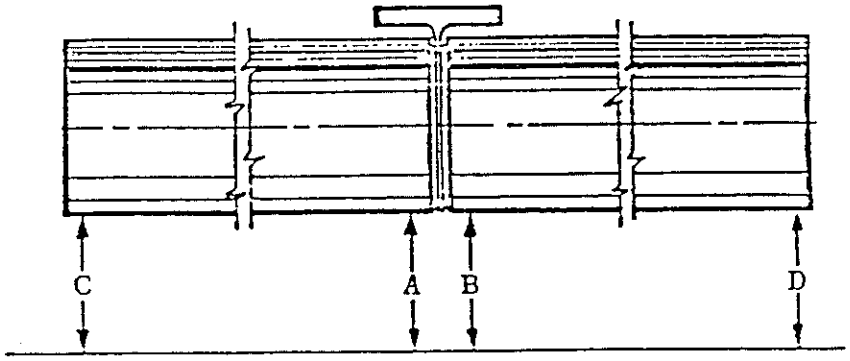

Figure 11-3k. Roll Segments Level

Hydraulic Core Chuck Alignment

Core Chucks, Centered, and Parallel (figure 11-3q).

1. Tolerance - .002 inch.

2. Test Equipment - Two bearings, shaft and dial indicator

3. Procedure
   a. Mount dial indicator on shaft.
   b. Place bearing assembly in the pocket between the drums.
   c. Indicate off the chuck as shown.
   d. Difference between average value for each chuck should be within tolerance.

4. Correction - Reposition drums and/or shim between cylinder and carriage.

5. Associated Problems
   a. Wrinkles at core
   b. Soft starts
   c. Excessive slide wear
   d. Vibration

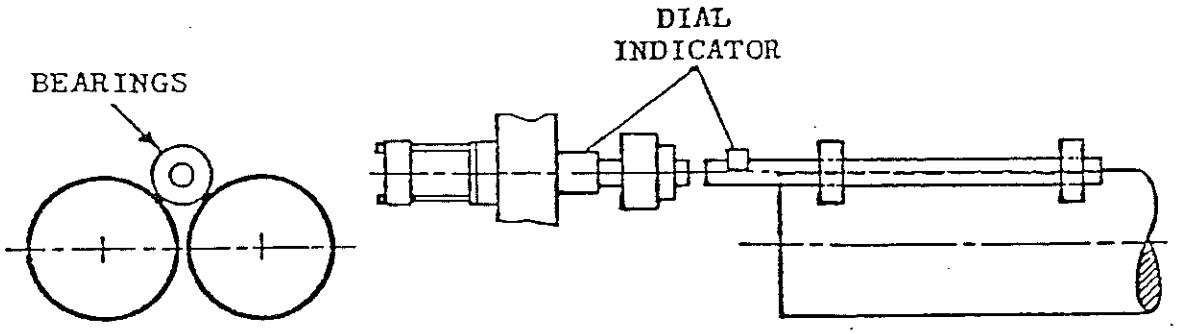

Figure 11-3q. Hydraulic Core Chucks Centered and Parallel

Core Chucks Level (figure 11-3r).

1. Tolerance - .002 inch.

2. Test Equipment - Optical alignment equipment

3. Procedure for 4000 Sereis winder
   a. Measure A and B off the cylinder barrel.
   b. Difference between A and B should be within tolerance.

4. Procedure for S, M, and L Winders
   a. Retract chuck so that rod is extended behind the cylinder.
   b. Measure A and B off rod.
   c. Difference should be within tolerance.

5. Correction
   a. Shim between cylinder and carriage.

6. Associated Problems
   a. Wrinkles
   b. Soft starts
   c. Excessive slide wear
   d. Vibration

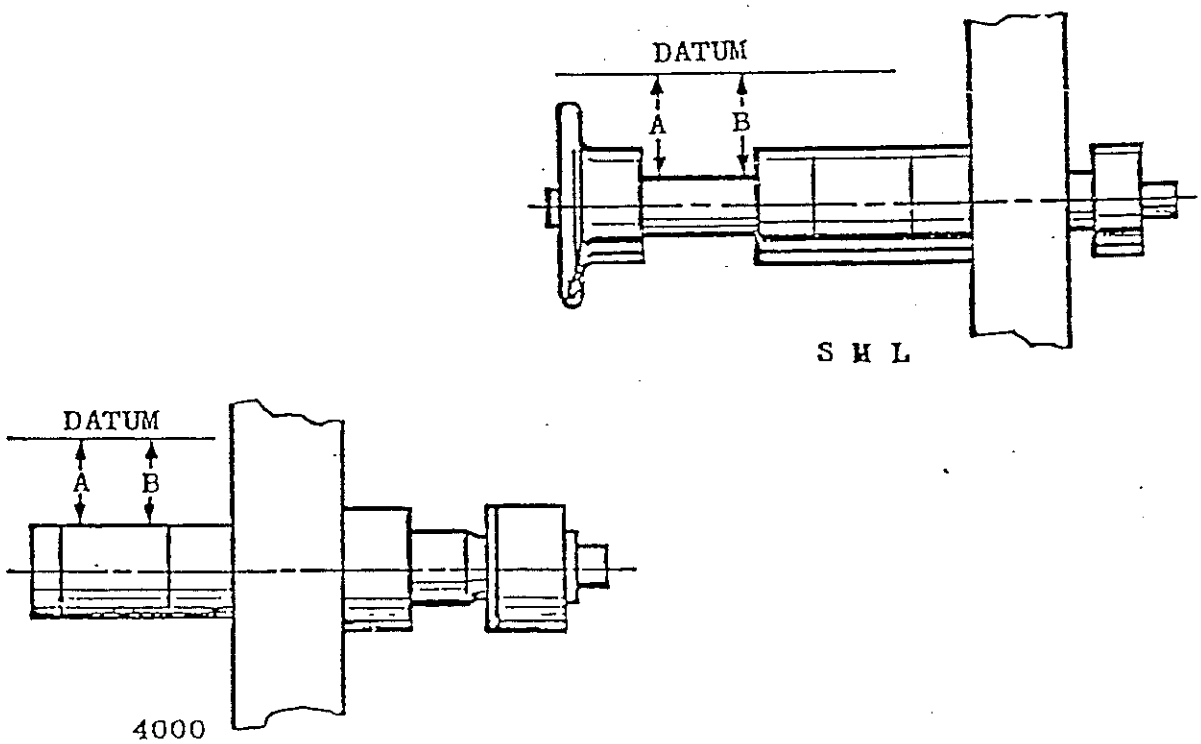

Figure 11-3r. Core Chucks Level

Doweling Instructions for Drums Doweling - The drum bearing housings are now to be pin doweled. Final doweling will be done at the field erection site.

NOTE: After final doweling the first drum will be used as the datum for alignment of the rest of the winder.

Paper Roll Alignment

Paper Rolls Level (figure 11-3s).

1. Tolerance
   a. .002 inch/100 in. face
   b. .005 inch maximum

2. Test Equipment - Optical alignment equipment

3. Procedure
   a. Measure A.
   b. A should be within tolerance.

4. Correction
   a. Shim under paper roll bearing housing.
   b. Do not dowel paper roll.

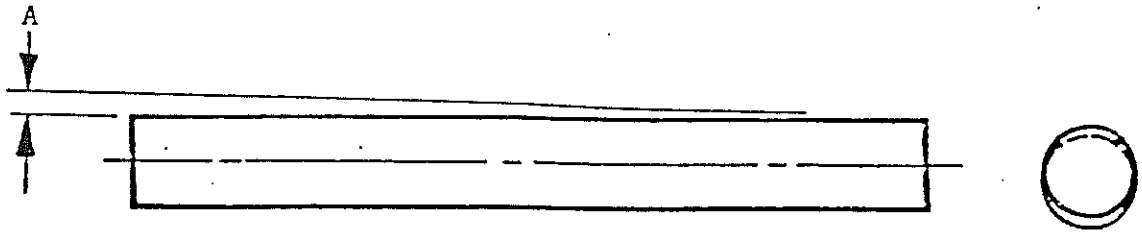

Figure 11-3s. Paper Roll Level

Paper Rolls Parallel (figure 11-3t).

1. Tolerance
   a. .002 inch/100 in. face
   b. .005 inch maximum

2. Test Equipment - Optical alignment equipment

3. Procedure
   a. Measure A and B.
   b. Difference between A and B should be within tolerance.

4. Correction
   a. Reposition paper roll bearing housing.
   b. Do not dowel until roll specs are fulfilled.

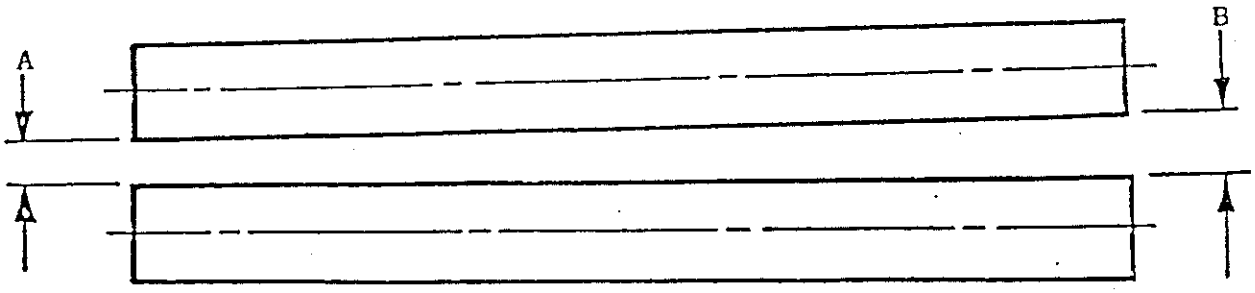

Figure 11-3t. Paper Roll Parallel

Intermediate Bearing Below Roll Face (figure 11-3w).

1. Tolerance - $\frac{.000}{.005}$ in.

2. Equipment - Dial Indicator

3. Procedure
   a. Place indicator on edge of roll.
   b. Slowly rotate roll until maximum reading is obtained.
   c. Now using same datum indicate to top of bearing housing.
   d. Difference should be within tolerance.

4. Associated Problems
   a. Scuffing web

Doweling - Pin dowel the paper roll bearing housings to the top plate of the load cell and also pin dowel the bottom plate of the load cell to the mounting pad.

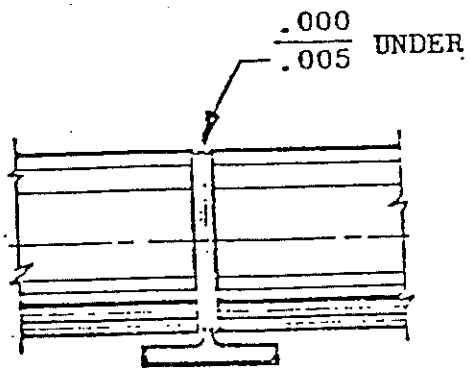

Figure 11-3w. Intermediate Bearing Housing Below Roll Face

BELOIT LENOX SLITTERS

GRINDING INSTRUCTIONS FOR BOTTOM KNIVES

Type of knife / Material Ring knife - bottom knife Carbide		KS-drawing-no.: 3.231.049.000 Carbide Insert Type Bottom Band Spec. No. 6B2223S

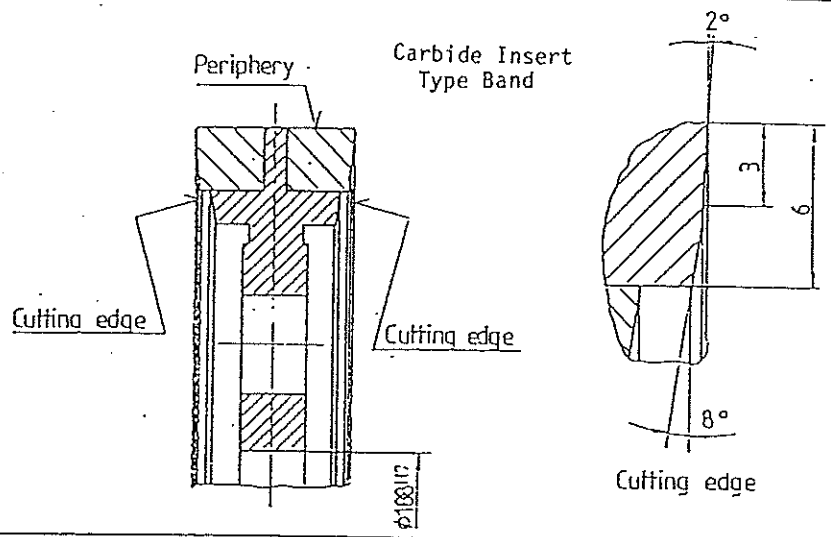

Work sequence: Pregrinding 2°-Phases	Recommendation of grinding wheel: Grain 120; hardness R Concentration ≧ 75 % Feed 0,01 mm/stroke	Make: Norton, Winter or equivalent
Fine grinding 2°-Phases	Grain 400; hardness R Concentration ≧ 50 % Feed 0,005 mm/stroke	
Polish grinding 2°-Phases	Grain 800; hardness R Concentration 50 % Feed 0	

Note: In all cases use only diamond grinding wheels with synthetic resin basis. Use generous water-cooling. Knife/blade rotating speed ≈ 70 rpm.

Grinding wheel peripheral speed v = 23...25 m/sec.

BELOIT LENOX SLITTERS

GRINDING INSTRUCTIONS FOR BOTTOM KNIVES

Standard Type
Band

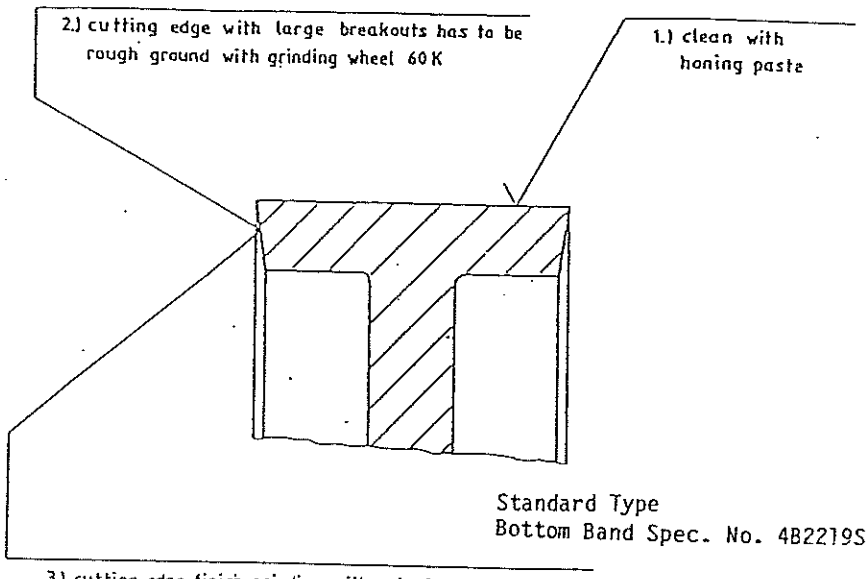

notes	grind'g wheel	hardness	grain size	bonding	manufact.
all grinding must be wet	Läppschm.				
	Edelkorund	K	60	keram.	Norton
	Edelkorund	JOT	80	keram.	Norton
	Ölstein	India - Flachfeile - Körnung m			Norton
	honing paste				
	Edelkorund	K	60	ceram.	Norton
	Edelkorund	JOT	80	ceram.	Norton
	oilstone	India flat, grain "m"			Norton

M6-00483-S-4

BELOIT LENOX SLITTERS

GRINDING INSTRUCTIONS FOR TOP KNIVES

Type of knife / Material Disked knife / Top blade	Standard Type Top Blade Spec. No. 4B2218S
High speed tool speed ASP and 12% Cr steel	Carbide Insert Type Top Blade Spec. No. 2B2217S

Angle For Use With Standard Type Band

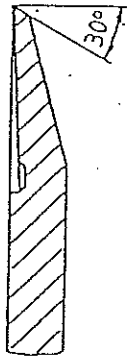

$\phi 180 \times 5 \times \phi 70$

Angle For Use With Carbide Insert Type Band

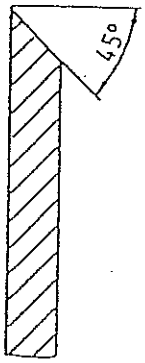

$\phi 180 \times 2 \times \phi 70$

Work sequence:	Recommendation of grinding wheel:	Make:
Phase pregrinding	25A80 - 18V8E	Norton
Phase fine grinding	EK320 - Jot78a506	Naxos
		or equivalent

Note:

Generous water-cooling!

BELOIT LENOX SLITTERS

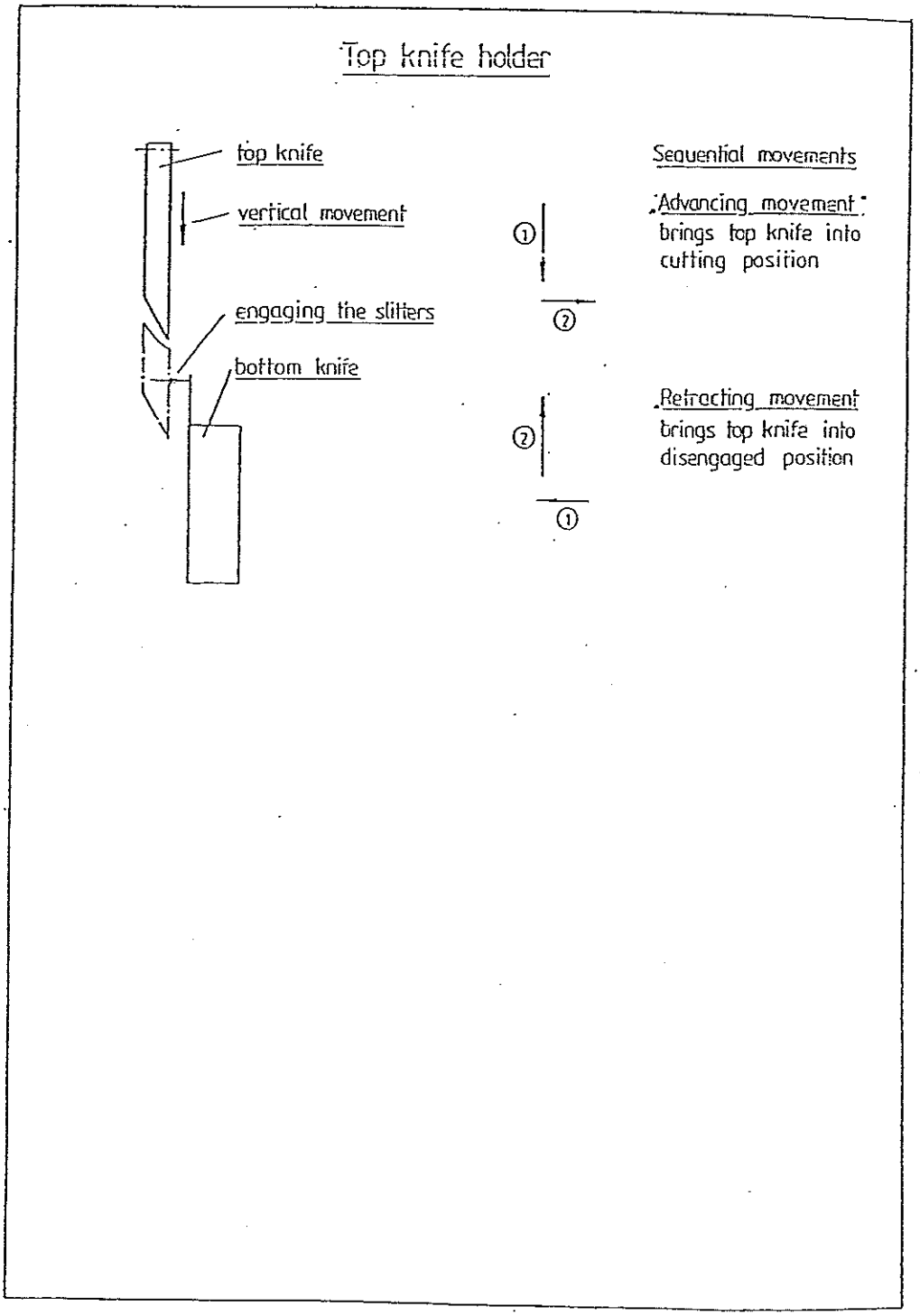

Care and Handling of Carbide Slitter Bands

The use of carbide as a cutting surface has greatly improved the life of slitter bands. Although carbide has a longer cutting life than a steel band, carbide bands require special handling and care.

1. Carbide Bands are Temperature Sensitive:

Carbide bands must not be stored in areas where the temperature falls below 50° F. Care should be taken when moving carbide bands from a cool environment to a warm environment. Allow the bands to slowly normalize to the environment they are to be used in. Exposing a cold band to a heated environment could cause bonding deterioration which could create a potentially hazardous condition.

2. Carbide Bands Require Special Handling:

Carbide bands should be stored and transported in their protective boxes. Gloves need to be used when handling carbide or any other type of slitter band or blade. Care should be taken when handling the bands to avoid contact with surfaces that may nick the carbide surface.

If the band has been dropped or bumped against another surface, closely inspect the carbide surface for small cracks or nicks. If nicks are discovered, have the band reground. If cracks are discovered, **discard the band.** Small cracks can spread and may result in the separation of the carbide from the metal substructure creating a potential hazard.

New bands are dipped in a protective coating to aid in the protection of the carbide surface . Make sure all the protective coating is removed before mounting the band.

3. Take Care in Mounting:

Carbide is fragile. Never attempt to force a carbide band onto its mounting surface. The bands are designed to fit snugly but should not be forced. Investigate the reason for an interference if the band does not fit. **Do not try to force the band in place by striking it!** This may damage the cutting surface, the bonding surface of the carbide, and the metal substructure causing separation of the carbide, creating a potential hazard. Remember temperature variations between the band and mounting surface may result in interferences which can cause binding.

4. Check Band Run-out:

Once the band is installed, inspect the run-out at the cutting surface and band outside diameter. Total indicator reading of the cutting surface is not to exceed 0.0027" (0.07 mm). Outside diameter is not to exceed 0.0039" (0.10 mm). If the band is found to be out of specification remove it and install another band. If the specification is still not met, then inspect the run-out of the band mounting surface. Both the mounting flange and the 7.401" (188 mm) diameter surfaces are not to exceed 0.0019" (0.05 mm). Replace or repair the slitter motor as required. Continued use of an out-of-spec band or motor will reduce the cutting life and cause rough and dusty cuts.

5. Routinely Inspect the Bands:

Inspect the top surface (outside diameter) of the bands for grooves in the bonding joint which may have been caused by the top blade coming down on the top of the bottom band. This sometimes happens if care is not taken or the positioning rod is not used during the manual positioning of the slitters. If this condition exists **replace the band immediately.** Continued use of a band in this condition may cause the carbide to become separated from the metal substructure. Routine inspection of this area will alert you to potential hazards. **Remember slitters must be completely stopped and the slitter disable switch turned to "disable" before inspection takes place.**

6. Regrinding of Bands:

Carbide bands require a special regrind process and typically can not be handled by sources that regrind steel bands and blades. Refer to Beloit drawing 77-2196-0001 for the specifications required for the regrinding of carbide bands. Drawing 77-2196-0001 shows the minimum thickness the carbide can be before the band must be discarded. Beloit Lenox offers a regrinding service or can recommend quality sources close to your mill for your regrinding needs.

LIST OF COMPONENTS

The List Of Components (L/C) provides a complete list of the assembly drawings, subordinate L/C's, system drawings, schematics, and control panel drawings that are listed on the main assembly drawing. Use it as a guide for locating and indentifying all numbered component information.

THE L/C FORMAT

Each page of the L/C contains the following sections:

- MAIN BODY
- TITLE BLOCK
- LEGEND BLOCKS

MAIN BODY

The MAIN BODY contains descriptions and drawing numbers of the machine's components and their relative documents—schematics, assembly drawings, subordinate L/C's, and Lists Of Documents (L/D's).
(See the illustration below)

The most important columns in the MAIN BODY are "DESCRIPTION" and "SYMBOL".

DESCRIPTION	Provides a verbal description of the Item
SYMBOL	Contains the identification number of the Item. In most cases this will be a drawing number.

USE	ITEM	QUAN.	DESCRIPTION	WIDTH	LENGTH	U OF M	SYMBOL	MATERIAL	SPL. INS	QUOT	S E G	CU FROM RELEASE DATE	REVISED RELEASE DATE	
	001	00	REF	LC-2291-50-4-0						1		10-7-80	10-7-80	
	001	00	REF	EXISTING HINGER B/A			N33-3000-0							
	001	00	REF	EXISTING L-26-G-50 HINGER ASSEMBLY			N33-133							
	001	00	REF	EXISTING GD. BD. SLITTER ARRANGEMENT			N33-0-15							
	01	00	001	LOAD CELL SLITTER ARRANGEMENT			50-2133-0005			1				
	01	01	001	LOAD CELL ARRANGEMENT			50-1003-0003-0 003			1		10-7-80	10-7-80	
	01	02	001	ROLL BOTH 6.00 (BEFORE) SLITTER			60-2291-50-4-0			1		10-7-80	10-7-80	
	01	03	001	ROLL BOTH 6.00 (BEFORE) SLITTER			60-2291-50-4-1			1		10-7-80	10-7-80	
	01	01	REF	6.00 SLITTER ROLL			50-5001-00.17-0-005							

L/C MAIN BODY

Additional information about each item is listed in the ITEM, QUAN, CU PR, and CU PRINT RELEASE DATE columns of the MAIN BODY.

ITEM	Used to indicate the group to which an item or assembly belongs (first two digits) and the sequence in which it is listed within that group (last two digits)
QUAN.	Specifies the required quantity of an item within the current group; also used to indentify reference sources (REF), such as a schematics or L/C's
CU PR	Contains code numbers that indicate whether the drawing is new (1) or existing (2)
CU PRINT RELEASE DATE	Specifies the date the customer's print was issued
MANUFACT. RELEASE DATE	Date the drawing was released from engineering.

Note: Other columns in the MAIN BODY will be left empty. They are used for internal processing by BELOIT Lenox during manufacture of the winder.

LIST OF COMPONENTS

TITLE BLOCK

The TITLE BLOCK contains general information about the winder and the L/C (see the illustration below).

HAND	UOM	DEPT. EXP.	DEPT. NO	TYPE	SPEED	GRADE	PROD. LINE	ORDER	FILE	DATE

DRAWN	CHK'D	BELOIT.	CUSTOMER NAME	WIRE
APP'D 1	APP'D 2	BELOIT CORPORATION BELOIT WISCONSIN U.S.A.	MILL	MACH. NO.

REVISION		WIDTH	TITLE — LIST OF COMPONENTS	IDENTIFICATION NUMBER

L/C TITLE BLOCK

The following headings and information fields in the TITLE BLOCK identify the winder:

CUSTOMER'S NAME	Name of Customer
MILL	Mill location
ORDER	A unique BELOIT Lenox order number that identifies the winder
HAND	The correct "hand" of the machine, i.e., if the drives are on the right side of the machine when the viewer is looking in the direction of the paper flow, it is a "right-hand" machine (R); if the drives are on the left side, it is a "left-hand" machine (L).
UOM	The unit of measure used to design the machine (metric or imperial)
SPEED	The design speed of the winder
GRADE	The grade of paper the machine has been designed to produce
MACH. NO.	The specified number of the paper machine or winder
WIDTH	The face width of the winder drums

LIST OF COMPONENTS

The following fields in the TITLE BLOCK are used to provide information about the L/C itself: TITLE - LIST OF COMPONENTS contains the correct title/description of the page's List Of Components, IDENTIFICATION NUMBER contains the correct drawing number of the page's List Of Components, TYPE refers to the kind of L/C being issued (REG = regular issue), PRODUCT LINE indicates the product line code, DRAWN, CHK'D, APP'D 1, APP'D 2, and REVISION indicate dates and BELOIT Lenox personnel involved with the creation of the L/C.

LEGEND BLOCKS

LEGEND - L/C ITEMS and LEGEND TOTAL L/C contain lists of the codes used to indicate the Units of Measure (UOM) in the L/C. SPECIAL INSTRUCTIONS contains a list of the codes used to indicate specific special instructions (see the illustration below).

LEGEND - L/C ITEMS

UNIT OF MEASURE (UOM)

IN — U.S. INCH	FT^2 — SQ. FOOT
FT — FOOT	M^2 — SQ. METER
GA — GALLON	Y^2 — SQ. YARD
MM — MILLIMETER	OZ — OUNCE
LB — POUNDS	QT — QUART
YD — YARD	PT — PINT

SPECIAL INSTRUCTIONS

D - SHIP DIRECT
P - MUST BE IN ONE PIECE
Mm - MATING PARTS
TO - THREAD ONE END
TB - THREAD BOTH ENDS
TF - THREAD FULL LENGTH
Cm - CERTIFIED PRINTS
DCm OR CmD - CERTIFIED PRINTS & SHIP DIRECT
PTO OR TOP - MUST BE ONE PIECE & THD ONE END
PTB OR TBP - MUST BE ONE PIECE & THD BOTH ENDS

RSP - RECOMMENDED SPARES

[*] RECOMMENDED SPARE PART FOR ITEMS OF THE L/C

LEGEND TOTAL L/C

UOM - UNIT OF MEASURE

IN - U.S. INCH

UD - DUAL DIM. (U.S. INCH/METRIC EQUIVALENT)

MM - METRIC

L/C LEGEND BLOCKS

LIST OF COMPONENTS

LIST OF COMPONENTS

RSP	ITEM		QUAN.	DESCRIPTION	WIDTH	LENGTH	U OF M	SYMBOL	MATERIAL	SPL INS	CU PR	SEQ	CU PRINT RELEASE DATE	MANUFACT. RELEASE DATE
	0A	00	REF	UNWIND LC				LC-2773-80-0-0						
	0B	00	REF	WINDER LC				LC-2773-50-4-0						
	0C	00	REF	BASEPLATE LC				LC-2773-94-0-0						
	0D	00	REF	ELECTRICAL CONTROLS LC				LC-2773-92-1-0						
	0E	00	REF	PNEUMATIC & HYDRAULIC CONTROLS LC				LC-2773-91-1-0						
	0F	00	REF	DRIVE LC				LC-2773-37-0-0						
	0G	00	REF	SPARE PARTS LC										
	0H	00	REF	WINDER SPEC SHEET				SPEC-2773-50-4-0						
	0I	00	REF	UNWIND ARRANGEMENT DRAWING				MA-2773-80-0-0						
	0J	00	REF	WINDER ARRANGEMENT DRAWING				MA-2773-50-4-0						
	01	01	REF	ELECTRIC MOTOR LIST				ML-2773-37-0-0					29-JUL-94	29-JUL-94
	90	00		**WINDER DRIVE - PURCHASE BY LENOX**										
	90	01	001	WINDER MOTOR SPECIFICATION				SPEC-2773-37-0-0					----------	11-MAY-94
R1	90	02	001	WINDER DRIVE SPECIFICATION				SPEC-2773-37-0-1					----------	02-JUN-94
	90	03	REF	SPEC.. DRIVE PERFORMANCE				1-77-7618						----------
R2	90	04	001	DRIVE TRANSFORMER SPECIFICATION				SPEC-2773-37-0-2					----------	02-JUN-94
	91	00		**WINDER DRIVE INTERFACE DRAWINGS:**										
C1	91	01	REF	WINDER DRIVE INTERFACE				37-6011-0089			1		24-AUG-94	24-AUG-94
	93	00		**DRIVE MANUFACTURE SCHEMATICS: ALLEN-BRADLEY ORDER #JXK187**										
C2	93	01	REF	DRIVE ELECTRICAL SCHEMATIC DIAGRAMS				D-JXK187-0002-2			4		24-AUG-94	----------
	93	02	REF	DRIVE SYSTEM INTERCONNECTION INFORMATION				D-JXK187-0002-5			4		24-AUG-94	----------
	93	03	REF	DRIVE EQUIPMENT CABINET OUTLINE/DIMENSIONS				C-JXK187-6 (SHEETS 1-4)			4		24-AUG-94	----------

L/C LEGEND	
UOM -	UNIT OF MEASURE
IN -	U.S. INCH
LO -	DUAL DIM. (U.S. INCH/METRIC EQUIVALENT)
MM -	METRIC

PROCESSING		
FUNCTION	BY	DATE
LIST OF COMPONENTS		
KEY PUNCH		
DRAWING PROCESS		

ALLEN-BRADLEY AC DRIVE SYSTEM

HARNISCHFEGER AC MOTORS with LAKESHORE DIGITAL TACHOMETERS

THIS PRINT IS THE PROPERTY OF BELOIT CORPORATION, A HARNISCHFEGER INDUSTRIES COMPANY. THE INFORMATION THEREON IS SUBMITTED IN CONFIDENCE

REVISION	U OF M	CLASS. OF CHAR.	ORDER NO.	CUSTOMER NAME	MACH. NO.
C2 R2 R1 0B 0A	IN	CRITICAL	8499	FRASER PAPER LTD. MILL	C-2
	DRFR DATE 11-MAY-94		FILE NO. 134828	MADAWASKA, ME	
	BUC	MAJOR	DEPT. NO. 063	DRAWN SJZ / CHK'D. SJZ / APP'D.1 SJZ / APP'D.2 GRC / HAND LH / TYPE SFM	GRADE COATED / SPEED 7500 / WIDTH 212
	BNC 37-9900		DATE 05-MAY-94	TITLE - LIST OF COMPONENTS: WINDER DRIVE LC	IDENTIFICATION NUMBER LC-2773-37-0-0

BELOIT CORPORATION
BELOIT LENOX DIVISION
P.O. BOX 898 LENOX, MASSACHUSETTS U.S.A. 01240

BEL-C000

LIST OF COMPONENTS

RSP	ITEM	QUAN.	DESCRIPTION	WIDTH	LENGTH	U OF M	SYMBOL	MATERIAL	SPL INS	CU PR	SEQ	CU PRINT RELEASE DATE	MANUFACT. RELEASE DATE
	0A 00	REF	UNWIND LC				LC-2773-80-0-0						--------
	0B 00	REF	WINDER LC				LC-2773-50-4-0						--------
	0C 00	REF	BASEPLATE LC				LC-2773-94-0-0						--------
	0D 00	REF	ELECTRICAL CONTROLS LC				LC-2773-92-1-0						--------
	0E 00	REF	PNEUMATIC & HYDRAULIC CONTROLS LC				LC-2773-91-1-0						--------
	0F 00	REF	DRIVE LC				LC-2773-37-0-0						--------
	0G 00	REF	SPARE PARTS LC										
	0H 00	REF	WINDER SPEC SHEET				SPEC-2773-50-4-0					27-MAY-94	--------
	0I 00	REF	UNWIND ARRANGEMENT DRAWING				MA-2773-80-0-0						--------
	0J 00	REF	WINDER ARRANGEMENT DRAWING				MA-2773-50-4-0					18-JUL-94	--------
	0K 00	REF	WINDER GAGE VIEW										--------
	0L 00	REF	ELECTRIC MOTOR LIST				ML-2773-37-0-0						--------
	10 00		**SLITTERS**										
	10 01		**QUICK-TRIM PARTS**										
	10 02	1	GUIDEWAY ASSEMBLY				50-2109-0031			1		12-APR-94	12-APR-94
	10 03	12	ELECTRIC MOTOR				EM0076-00090			2		----------	16-FEB-94
	10 06	12	RACK & PINION ASSEMBLY				50-2141-0006			2		29-MAR-94	16-FEB-94
	10 09	11	BOTTOM SLITTER (INTER) P/L				50-2121-0047-0			2		12-APR-94	12-APR-94
	10 11	1	BOTTOM SLITTER (TRIM) P/L				50-2121-0048-0			2		12-APR-94	12-APR-94
	10 12	12	BAND, SLITTER (CARBIDE)				682223S			2		----------	16-FEB-94
	10 13	12	SLIDE, SLITTER				50-2121-0060			1		03-OCT-94	03-OCT-94
	10 14	11	TOP SLITTER ASSEMBLY (INTER)				50-2126-0011-0			2		12-APR-94	12-APR-94
	10 16	1	TOP SLITTER ASSEMBLY (TRIM)				50-2126-0010-0			2		12-APR-94	12-APR-94
	10 18	12	KNIFE, TOP SLITTER				282217S			2		----------	16-FEB-94
	10 19	11	TOP SLITTER HOLDER (PULL)				50-2126-0020			2		29-MAR-94	16-FEB-94
	10 21	1	TOP SLITTER HOLDER (PUSH)				50-2126-0021			2		29-MAR-94	16-FEB-94
	10 23	24	CLAMPING UNIT ASSEMBLY #1				50-2130-0046			2		29-MAR-94	16-FEB-94
	10 50	N/A	**DIGITRIM PARTS**										
	10 50	N/A	**AUTOTRIM PARTS**										

L/C LEGEND

UOM - UNIT OF MEASURE
IN - U.S. INCH
UD - DUAL DIM. (U.S. INCH/METRIC EQUIVALENT)
MM - METRIC

PROCESSING

FUNCTION	BY	DATE
LIST OF COMPONENTS		
KEY PUNCH		
DRAWING PROCESS		

REVISION	DATE	BY
A	14-DEC-93	SJZ
B	28-OCT-93	SJZ
C	17-OCT-93	SJZ
D	03-OCT-93	SJZ
E	30-SEP-93	SJZ
F	27-SEP-93	SJZ
G	16-SEP-93	SJZ
H	13-SEP-93	SJZ
J	06-SEP-93	SJZ
K	02-SEP-93	SJZ
L	26-AUG-93	SJZ
M	20-AUG-93	SJZ
N	13-AUG-93	SJZ
P	27-MAY-93	SJZ
Q	24-MAY-93	SJZ
R	19-MAY-93	SJZ
S	13-MAY-93	SJZ
T	26-FEB-93	SJZ
U	23-FEB-93	SJZ
V	22-FEB-93	SJZ
W	22-FEB-93	SJZ
X	22-FEB-93	SJZ
Y	22-FEB-93	SJZ

THIS PRINT IS THE PROPERTY OF BELOIT CORPORATION, A HARNISCHFEGER INDUSTRIES COMPANY. THE INFORMATION THEREON IS SUBMITTED IN CONFIDENCE

U OF M: IN
CAPR DATE: 16-FEB-94
BUC:
BNC: 50-9900
CLASS. OF CHAR.: CRITICAL
MAJOR
ORDER NO.: 8499
FILE NO.: 134828
CUSTOMER NAME: FRASER PAPER, LTD.
MILL: MADAWASKA, ME
MACH. NO.: C-2
BELOIT CORPORATION
BELOIT LENOX DIVISION
P.O. BOX 968 LENOX, MASSACHUSETTS 01240 U.S.A.

DEPT. NO.	DRAWN	CHK'D.	APP'D.1	APP'D.2	HAND	TYPE	GAGE	SPEED	WIDTH
063	PBS	SJZ	SJZ	MLT	LH	SF	COATED	7500	212

DATE: 07-DEC-93
TITLE - LIST OF COMPONENTS: WINDER LC. SFM-V-60
IDENTIFICATION NUMBER: LC-2773-50-4-0

BCL-CA009

LIST OF COMPONENTS

ASP	ITEM		QUAN.	DESCRIPTION	WIDTH	LENGTH	U OF M	SYMBOL	MATERIAL	SPL INS	CU PR	SEQ	CU PRINT RELEASE DATE	MANUFACT. RELEASE DATE
	11	00		**TRIM REMOVAL**										
	11	01	N/A	CHUTE MTG. TRIM										
	11	02	1	CHUTE, TRIM				50-2103-0022-0-004			2		29-MAR-94	16-FEB-94
	11	05	1	TRIM REMOVAL SYSTEM				50-2108-0020			1		16-MAY-94	16-MAY-94
	12	00	REF	**SLITTER FRAME ARRANGEMENT DRAWING**										
	12	01	1	BEAM, TOP SLITTER ROLL				50-2113-0180			1		18-JUL-94	18-JUL-94
	12	02	1	BEAM, BOTTOM SLITTER				5WF12062-1			1		--------	29-MAR-94
	12	03	1	BEAM, TOP SLITTER				BF2414-2			1		--------	29-MAR-94
	12	04	1	BEAM, SHEET THREADER				BF2929			1		--------	29-MAR-94
	12	05	1	FRAMEWORK, SLITTER				4BF2416-1			1		--------	29-MAR-94
	12	06	1	SAFETY EQUIPMENT, SLITTER - SF VERT				50-0621-0011		CR	1		13-MAY-94	25-FEB-94
	12	07	1	STATIC ELIMINATION BAR ARR				50-7310-0040			2		29-MAR-94	16-FEB-94
	12	08	1	GUARD, SLITTER (OPER.)				50-7315-0001			1		30-AUG-94	30-AUG-94
	12	09	1	GUARD, SLITTER (DRIVE)				WF14456			1		--------	28-OCT-94
								WF14457			1		--------	28-OCT-94
	13	00		**LEAD-IN ROLL**										
	13	01	1	RD DRAWING				RD-2773-50-4-0			1		29-MAR-94	16-FEB-94
	13	02	REF	ROLL DETAIL				50-2625-0003-0-002			2		--------	--------
				17.88 DIA (STEEL)										
	13	03	1	BEARING ASSEMBLY				WCR-2A0192-AB			2		29-MAR-94	16-FEB-94
	13	04	N/A	ROLL BRAKE										
	13	05	1	ROLL DRIVE ASSEMBLY				50-2863-0024-0-001			1		24-MAY-94	24-MAY-94
	13	06	1	WRENCH, SKEW ADJMT-LEAD-IN ROLL				50-2841-0019			2		29-MAR-94	25-FEB-94
	14	00		**BEFORE SLITTER SPREADER**										
	14	01	1	RD DRAWING				RD-2773-50-4-1			1		--------	03-JUN-94
				10.5 DIA. RUBBER COVERED, HIGH SPEED AXLE										
	14	02	1	DRIVE ASSEMBLY				50-2859-0048			1		24-MAY-94	24-MAY-94
	14	03	1	ROLL MOUNTING, 10.5 O.D.				50-2811-0039-0-001			1		13-MAY-94	13-MAY-94

L/C LEGEND	
UOM -	UNIT OF MEASURE
IN - U.S. INCH	
UD - DUAL DIM. (U.S. INCH/METRIC EQUIVALENT)	
MM - METRIC	

PROCESSING		
FUNCTION	BY	DATE
LIST OF COMPONENTS		
KEY PUNCH		
DRAWING PROCESS		

REVISION	DATE
Y	14-DEC-94
X	28-OCT-94
W	27-OCT-94
V	03-OCT-94
U	30-AUG-94
T	09-AUG-94
S	27-JUL-94
R	18-JUL-94
Q	15-JUL-94
P	06-JUL-94
N	02-JUL-94
M	28-JUN-94
L	03-JUN-94
K	27-MAY-94
J	24-MAY-94
H	16-MAY-94
G	13-MAY-94
F	26-APR-94
E	18-APR-94
D	12-APR-94
C	06-APR-94
B	29-MAR-94
A	25-FEB-94

THIS PRINT IS THE PROPERTY OF BELOIT CORPORATION, A HARNISCHFEGER INDUSTRIES COMPANY. THE INFORMATION THEREON IS SUBMITTED IN CONFIDENCE

U OF M: IN
DRPR DATE: 16-FEB-94
BUC:
BNC: 50-9900
CLASS. OF CHAR.: CRITICAL / MAJOR
ORDER NO.: 8499
FILE NO.: 134828
CUSTOMER NAME: FRASER PAPER, LTD.
MILL: MADAWASKA, ME
MACH. NO.: C-2
DEPT. NO.: 063
DRAWN: PBS
CHK'D.: SJZ
APP'D.1: SJZ
APP'D.2: MLT
HAND: LH
TYPE: SF
GRADE: COATED
SPEED: 7500
WIDTH: 212
DATE: 07-DEC-93
TITLE - LIST OF COMPONENTS: WINDER LC, SFM-V-60
IDENTIFICATION NUMBER: LC-2773-50-4-0

BELOIT CORPORATION
BELOIT LENOX DIVISION
P.O. BOX 848 LENOX, PITTSFIELD-CITY, U.S.A. 01254

BEL-CADD

LIST OF COMPONENTS

RSP	ITEM	QUAN.	DESCRIPTION	WIDTH	LENGTH	U OF M	SYMBOL	MATERIAL	SPL INS	CU PR	SEQ	CU PAINT RELEASE DATE	MANUFACT. RELEASE DATE
	15 00		BEFORE SLITTER ROLL										
	15 01	1	RD DRAWING				RD-2773-50-4-2			1		29-MAR-94	16-FEB-94
	15 02	REF	ROLL DETAIL				50-5001-0037-0-015					--------	--------
			(4) SECTION - 6.88 DIA										
	15 03	1	END BRACKETS				50-2845-0021			2		29-MAR-94	16-FEB-94
	15 04	4	BEARINGS, 6.88 DIA SLTR. ROLL				50-2845-0020			2		29-MAR-94	16-FEB-94
	16 00		AFTER SLITTER ROLL										
	16 01	1	RD DRAWING				RD-2773-50-4-3			1		29-MAR-94	16-FEB-94
	16 02		ROLL DETAIL				50-5001-0037-0-015					--------	--------
			(4) SECTION - 6.88 DIA										
	16 03	1	END BRACKETS				50-2845-0021			2		--------	16-FEB-94
	16 04	4	BEARINGS, 6.88 DIA SLTR. ROLL				50-2845-0020			2		--------	16-FEB-94
	17 00		LOAD CELL ASSEMBLY										
	17 01	1	LOAD CELL ARRANGEMENT: COMPTROL				50-1903-0011-0-008			2		18-JUL-94	18-JUL-94
	17 02	3	SPACERS, LOAD CELL				50-1903-0012			2		29-MAR-94	16-FEB-94
	18 00		THREADING SYSTEM										
	18 01	1	LEAD-IN SHEET THREADER				50-1801-0150			1		29-MAR-94	16-FEB-94
	18 02	N/A	LEAD-IN SHEET HOLDER										
	18 03	N/A	THREADING WHEEL ASSEMBLY, AFT SLTR ROLL										
	18 04	1	THREADING PANS, DUAL ROLL SPREADER				50-1801-0151			1		24-MAY-94	24-MAY-94
	18 05	1	SHEET GUIDE, PAN TO THREADER				WF13051			2		--------	24-MAY-94
	18 06	1	BACK DRUM SHEET THREADER				50-1801-0083			2		29-MAR-94	16-FEB-94
	18 07	2	BACK DRUM SHEET HOLDER ASSEMBLY				WSH-2A0019-11			2		29-MAR-94	25-FEB-94
	18 08	N/A	SHEET GUIDE, LEAD-IN THREADER										
	18 09	1	MODIFICATION, THREADER PANS				77-5018-0004			1		--------	24-MAY-94
			AFTER SLITTER SPREADER MODULE										
	20 00	N/A	D-BAR SPREADER										
	21 00	N/A	FIXED-BOW ASSEMBLY										
			MULTI-BOW (MOUNT HOPE)										
			VARI-BOW (SPENCER-JOHNSTON)										
	22 00	N/A	SEGMENTED BOWED ROLL										

L/C LEGEND

UOM - UNIT OF MEASURE
IN - U.S. INCH
UD - DUAL DIM. (U.S. INCH/METRIC EQUIVALENT)
MM - METRIC

PROCESSING

FUNCTION	BY	DATE
LIST OF COMPONENTS		
KEY PUNCH		
DRAWING PROCESS		

REVISION	DATE
Y	14-DEC-94
X	28-OCT-94
W	17-OCT-94
V	03-OCT-94
U	30-AUG-94
T	09-AUG-94
S	27-JUL-94
R	18-JUL-94
Q	14-JUL-94
P	06-JUL-94
N	05-JUL-94
M	28-JUN-94
H	03-JUN-94
L	27-MAY-94
K	24-MAY-94
J	16-MAY-94
G	13-MAY-94
F	26-APR-94
E	18-APR-94
D	12-APR-94
C	05-APR-94
B	29-MAR-94
A	23-FEB-94

THIS PRINT IS THE PROPERTY OF BELOIT CORPORATION A HANNISCHFEGER INDUSTRIES COMPANY. THE INFORMATION THEREON IS SUBMITTED IN CONFIDENCE

U OF M: IN
DRFR DATE: 18-FEB-94
BUC:
BNC: 50-9900
CLASS. OF CHAR.: CRITICAL
HAZOR:
ORDER NO.: 8499
FILE NO.: 194828
CUSTOMER NAME: FRASER PAPER, LTD.
MILL: MADAWASKA, ME
MACH. NO.: C-2
DEPT. NO.: 063
DRAWN: PBS
CHK'D.: SJZ
APP'D.1: SJZ
APP'D.2: MLT
HAND: LH
TYPE: SF
DATE: 07-DEC-93
TITLE - LIST OF COMPONENTS: WINDER LC, SFM-V-60
GRADE: COATED
SPEED: 7500
WIDTH: 212
IDENTIFICATION NUMBER: LC-2773-50-4-0

BELOIT CORPORATION
BELOIT-LENOX DIVISION
P.O. BOX 962 LENOX, MASSACHUSETTS U.S.A. 01240

BEL-CA00

LIST OF COMPONENTS

RSP	ITEM	QUAN.	DESCRIPTION	WIDTH	LENGTH	U OF M	SYMBOL	MATERIAL	SPL INS	CU PR	SEQ	CU PRINT RELEASE DATE	FACT. RELEASE DATE
	25 00		DUAL ROLL - PIVOT MOUNT - DRIVEN										
	25 01	1	DUAL ROLL SPREADER (MOUNTING STAND ASSEMBLY)				SPEC-2773-50-4-1			1		--------	18-APR-94
	25 02	1	RD DRAWING - 1ST ROLL				RD-2773-50-4-4			1		--------	03-JUN-94
			10.5 DIA. RUBBER COVERED. HIGH SPEED AXLE										
	25 03	1	RD DRAWING - 2ND ROLL				RD-2773-50-4-5			1		--------	03-JUN-94
			10.5 DIA. RUBBER COVERED. HIGH SPEED AXLE										
	25 04	1	DUAL ROLL SPREADER ROTATABLE TABLE - TENDING SIDE ELEVATION				D-955-EL			1		18-JUL-94	--------
	25 05	1	DUAL ROLL SPREADER ROTATABLE TABLE - CROSS MACHINE VIEW				D-955-CM			1		18-JUL-94	--------
	25 06	1	DUAL ROLL SPREADER ROTATABLE TABLE - PLAN VIEW				D-955-PL			1		18-JUL-94	--------
	26 00	N/A	POS-Z										
			WIND-UP MODULE										
	30 00		FRAME ASSEMBLY										
	30 01	1	WIND-UP FRAME ASSEMBLY				50-0545-0004-0-003			2		29-MAR-94	16-FEB-94
	30 02	1	CROSSTIE. WINDER FRAME				5WF12694-16			1		--------	29-MAR-94
	30 03	1	REAR FRAME BARRIER				50-0584-0004			2		12-APR-94	12-APR-94
	30 04	N/A	REAR FRAME GUARD										
	30 05	1	ROLL DIAMETER SCALE				50-0712-0017			1		29-MAR-94	16-FEB-94
	30 06	1	SAFETY EQUIP. SF WINDER				50-7310-0046			1		29-MAR-94	16-FEB-94
	30 07	N/A	DRUMGUARD										
	30 08	1	BARRIER WELDMENT				WF13358-5			1		--------	26-APR-94
	30 09	1	REWORK. CROSSTIE				77-5005-0008			1		--------	09-AUG-94
	31 00		1ST / BACK DRUM 30." DIAMETER										
	31 01	1	RD DRAWING				RD-2773-50-4-6			1		29-MAR-94	16-FEB-94
	31 02	REF	DRUM DETAIL				50-2316-0021-0-001					--------	--------
	31 03	1	BEARING ASSEMBLY				50-2327-0016-0-002			2		29-MAR-94	16-FEB-94
	31 04	1	PARKING BRAKE ASSEMBLY				50-2885-0004			2		29-MAR-94	16-FEB-94
	31 05	1	DRIVE SHAFTING & COUPLINGS				50-9200-0064			1		27-MAY-94	27-MAY-94
	32 00		2ND / FRONT DRUM 30." DIAMETER										
	32 01	1	RD DRAWING				RD-2773-50-4-7		CR	1			16-FEB-94
	32 02	REF	DRUM DETAIL				50-2301-0064-0-001					--------	--------
	32 03	1	BEARING ASSEMBLY				50-2327-0016-0-002			2		--------	16-FEB-94

L/C LEGEND	
UOM -	UNIT OF MEASURE
IN -	U.S. INCH
UD -	DUAL DIM. (U.S. INCH/METRIC EQUIVALENT)
MM -	METRIC

PROCESSING		
FUNCTION	BY	DATE
LIST OF COMPONENTS		
KEY PUNCH		
DRAWING PROCESS		

REVISION	DATE
Y	14-DEC-94
X	28-OCT-94
W	17-OCT-94
V	03-OCT-94
U	30-SEP-94
T	19-AUG-94
S	27-JUL-94
R	18-JUL-94
Q	14-JUL-94
P	06-JUL-94
N	05-JUL-94
M	28-JUN-94
L	03-JUN-94
K	27-MAY-94
J	24-MAY-94
H	16-MAY-94
G	13-MAY-94
F	26-APR-94
E	18-APR-94
D	12-APR-94
C	06-APR-94
B	29-MAR-94
A	25-FEB-94

THIS PRINT IS THE PROPERTY OF BELOIT CORPORATION. A HARNISCHFEGER INDUSTRIES COMPANY. THE INFORMATION THEREON IS SUBMITTED IN CONFIDENCE

U OF M: IN
APPR DATE: 16-FEB-94
BUC:
BNC: 50-9900
CLASS. OF CHAR.: CRITICAL / MAJOR
ORDER NO.: 8499
FILE NO.: 134628
DEPT. NO.: 063
DATE: 07-DEC-93
CUSTOMER NAME: FRASER PAPER. LTD.
MILL: MADAWASKA. ME
MACH. NO.: C-2
DRAWN: PBS
CHK'D.: SJZ
APP'D.1: SJZ
APP'D.2: MLT
MAND: LH
TYPE: SF
GRADE: COATED
SPEED: 7500
WIDTH: 212
TITLE - LIST OF COMPONENTS: WINDER LC. SFM-V-60
IDENTIFICATION NUMBER: LC-2773-50-4-0

BELOIT CORPORATION
BELOIT LENOX DIVISION
P.O. BOX 994 LENOX, MASSACHUSETTS U.S.A. 01240

BEL-C000

LIST OF COMPONENTS

ASP	ITEM		QUAN.	DESCRIPTION	WIDTH	LENGTH	U OF M	SYMBOL	MATERIAL	SPL INS	CU PR	SEG	CU PRINT RELEASE DATE	MANUFACT. RELEASE DATE
	33	00		**CORESLIDES & CHUCKS**										
	33	01	1	CORESLIDE ASSEMBLY										
	33	02	2	MOTOR, ELECT-AC-.75 HP-1800 RPM-60 HZ. 575V. DFT80K4 FRAME.				50-5436-0149-0-003			2		29-MAR-94	16-FEB-94
				STD BRAKE W/230 VOLT COIL. OPTIONAL FLANGE. BD=160MM				293224-005			2		---------	16-MAY-94
	33	03	2	PROX. SWITCH ASSEMBLY										
	33	04	1	CORESLIDE STOP ASSEMBLY				50-5436-0148-0-003			2		29-MAR-94	16-FEB-94
	33	05	2	3" CHUCK (FIBER)				50-5478-0072			2		29-MAR-94	16-FEB-94
	33	06	2	3" CHUCK (FIBER)				WCC-2B0066-56			2		16-MAY-94	16-MAY-94
	33	07	2	5" CHUCK ADAPTER (FIBER)				WCC-2B0066-57			2		28-OCT-94	28-OCT-94
	33	08	2	6" CHUCK ADAPTER (FIBER)				50-3514-0017-0-006			2		---------	16-MAY-94
	33	09	1	BARRIER, CORE SLIDE				50-3515-0014-0-004			2		---------	16-MAY-94
								50-7330-0014			2		29-MAR-94	16-FEB-94
	34	00		**RIDER ROLL ASSEMBLY**										
	34	01	1	ROLL MOUNTING ASSEMBLY										
	34	02	1	BEAM DETAIL				50-2846-0082-0-001			1		29-MAR-94	25-FEB-94
	34	03	N/A	BEARING ASSEMBLY, RIDER ROLL				WF14335			1		---------	13-MAY-94
	34	04	46	WHEEL MOUNTING, ARTICULATING RIDER ROLL										
	34	05	46	WHEEL, RIDER ROLL (10.5 O.D.)				50-2703-0011-0-001			1		12-APR-94	12-APR-94
	34	06	N/A	DRIVE ASSEMBLY, RIDER ROLL				50-2703-0014			2		---------	25-FEB-94
	34	07	1	RIDER ROLL CONTROL ASSEMBLY										
	34	08	1	CROSS SHAFT DETAIL				50-7211-0053			2		29-MAR-94	25-FEB-94
	34	09	1	SAFETY LATCH ASSEMBLY (RH)				50-7211-0042-0-016			2		---------	25-FEB-94
	34	10	1	SAFETY LATCH ASSEMBLY (LH)				50-7223-0014			2		29-MAR-94	16-FEB-94
	34	11	1	GUARD ASSEMBLY, R.R. CYLINDERS				50-7223-0015			2		29-MAR-94	16-FEB-94
	34	12	1	PIPING, ARTIC. RIDER ROLL				50-7301-0046			1		28-JUN-94	28-JUN-94
	34	13	23	PIPING, ACCUMULATOR (SHORT)				50-8701-0069			1		28-JUN-94	28-JUN-94
	34	14	23	PIPING, ACCUMULATOR (LONG)				50-8701-0066			2		14-JUL-94	14-JUL-94
	34	15	1	PIPING, SPECIAL - ACCUM. CHARGE				50-8701-0067			2		14-JUL-94	14-JUL-94
	34	16	1	SUPPLY PIPING, ARTIC. R.R.				50-8701-0071			2		14-JUL-94	14-JUL-94
	34	17	1	LEVEL SENSOR, SIGHT GAGE				50-8701-0073			1		14-JUL-94	14-JUL-94
	34	18	2	STAND, SHIPPING				50-8701-0054-0-002			2		18-JUL-94	18-JUL-94
	34	19	46	FITTINGS, ACCUM. BLEED-OFF				WF14316-1			1		---------	30-AUG-94
	34	20	1	NIPPLE, HOSE QUICK DISCONNECT				50-8701-0077			1		03-OCT-94	03-OCT-94
								264287-256			2		---------	03-OCT-94
	35	00		**EJECTOR ASSEMBLY**										
	35	01	1	EJECTOR ASSEMBLY										
	35	02	1	EJECTOR WELDMENT				50-8048-0012			2		29-MAR-94	16-FEB-94
	35	03	1	THREADING AIR ASSIST				WF13086-1			1		---------	06-APR-94
								WST-2A0037-15-AE			2		---------	06-APR-94

L/C LEGEND

UOM - UNIT OF MEASURE
IN - U.S. INCH
UD - DUAL DIM. (U.S. INCH/METRIC EQUIVALENT)
MM - METRIC

PROCESSING

FUNCTION	BY	DATE
LIST OF COMPONENTS		
KEY PUNCH		
DRAWING PROCESS		

REVISION	
Y	14-DEC-94
X	28-OCT-94
W	17-OCT-94
V	03-OCT-94
U	30-AUG-94
T	09-AUG-94
S	27-JUL-94
R	18-JUL-94
Q	14-JUL-94
P	06-JUL-94
N	05-JUL-94
M	28-JUN-94
L	03-JUN-94
K	27-MAY-94
J	24-MAY-94
H	16-MAY-94
G	13-MAY-94
F	26-APR-94
E	18-APR-94
D	12-APR-94
C	06-APR-94
B	29-MAR-94
A	25-FEB-94

THIS PRINT IS THE PROPERTY OF BELOIT CORPORATION, A HARNISCHFEGER INDUSTRIES COMPANY. THE INFORMATION THEREON IS SUBMITTED IN CONFIDENCE

U OF M: IN
DRPA DATE: 16-FEB-94
BUC:
BNC: 50-9900
CLASS. OF CHAR.: CRITICAL / MAJOR
ORDER NO.: 8499
FILE NO.: 134828
CUSTOMER NAME: FRASER PAPER, LTD.
MILL: MADAWASKA, ME
MACH. NO.: C-2
DEPT. NO.: 063
DRAWN: PBS
CHK'D.: SJZ
APP'D.1: SJZ
APP'D.2: MLT
HAND: LH
TYPE: SF
DATE: 07-DEC-93
TITLE - LIST OF COMPONENTS: WINDER LC, SFM-V-60

BELOIT CORPORATION
BELOIT LENOX DIVISION
P.O. BOX 898 LENOX, MASSACHUSETTS 01240 USA

GRADE: COATED
SPEED: 7500
WIDTH: 212
IDENTIFICATION NUMBER: LC-2773-50-4-0

BEL-CA00

LIST OF COMPONENTS

RSP	ITEM	QUAN.	DESCRIPTION	WIDTH	LENGTH	U OF M	SYMBOL	MATERIAL	SPL INS	CU PR	SEQ	CU PRINT RELEASE DATE	FACT. RELEASE DATE	
	36 00	N/A	BACK DRUM KNIFE ASSEMBLY											
	37 00	N/A	CORE INJECTOR (FRONT DRUM)											
	38 00	N/A	CORE TABLE & FEEDER											
	39 00	N/A	VERTICAL BARRIER											
	40 00		DISCHARGE CRADLE											
	40 01	1	CRADLE ASSEMBLY				50-8312-0008			2		29-MAR-94	16-FEB-94	
	40 02	1	CRADLE WELDMENT				WF14252			1		--------	26-APR-94	
	40 03	1	TOE GUARD ASSEMBLY				50-7301-0023-0-009			2		26-APR-94	26-APR-94	
	40 04	1	GUARD, CRADLE				50-7301-0051			2		17-OCT-94	17-OCT-94	
	40 05	1	SAFETY EQUIPMENT, CRADLE - DRUM MTG				50-7310-0044			1		29-MAR-94	16-FEB-94	
	40 06	1	REWORK CRADLE				77-5083-0002			1		---------	27-JUL-94	
	40 07	1	REWORK WINDER FRAME				77-5005-0007			1		---------	27-JUL-94	
	40 08	1	SAFETY LATCH, LOWERING CRADLE				50-8317-0013			1		27-JUL-94	27-JUL-94	
	40 09	1	SWITCH, CRADLE SAFETY				50-9101-0147-0-001			1		09-AUG-94	09-AUG-94	
	41 00		WINDER PIPING											
	41 01	1	PIPING, CROSS MACHINE - QUICK TRIM				50-8901-0078-0-005			1		26-APR-94	26-APR-94	
	41 02	N/A	PIPING, WINDER FRAME											
	41 03	1	PIPING, WINDER CROSS TIE				50-0589-0080			2		09-AUG-94	25-FEB-94	
	41 04	1	PIPING, CORESLIDE CYLINDER				50-5430-0027			2		09-AUG-94	16-FEB-94	
	41 05	1	PIPING ASSEMBLY, AIDER ROLL				50-2846-0062			2		09-AUG-94	16-FEB-94	
	41 06	1	PIPING, CRADLE				50-8726-0041			2		09-AUG-94	16-FEB-94	
	41 07	N/A	CORE POCKET & SIDEPLATE PIPING											
	41 08	N/A	EJECTOR KNIFE											
	41 08	N/A	BACK DRUM KNIFE											
	41 08	N/A	PIPING RACK, KNIFE											
	41 09	1	PIPING, EJECTOR				50-8721-0007			2		09-AUG-94	16-FEB-94	
	41 10	1	SAFETY SIGNS, HYD UNIT - SF				50-7310-0043			2		29-MAR-94	16-FEB-94	
	41 11	10	PIPING, SLITTER TOP & BOTTOM (INTER)				50-8901-0073			2		29-MAR-94	16-FEB-94	
	41 11	2	PIPING, SLITTER TOP & BOTTOM (TRIM)				50-8901-0086					---------	09-AUG-94	
	42 00	N/A	WINDER PLATFORMS & WALKWAYS											

L/C LEGEND	
UOM -	UNIT OF MEASURE
IN - U.S. INCH	
UD - DUAL DIM. (U.S. INCH/METRIC EQUIVALENT)	
MM - METRIC	

PROCESSING		
FUNCTION	BY	DATE
LIST OF COMPONENTS		
KEY PUNCH		
DRAWING PROCESS		

REVISION	DATE
Y	14-DEC-94
X	28-OCT-94
W	17-OCT-94
V	03-OCT-94
U	30-AUG-94
T	09-AUG-94
S	27-JUL-94
R	18-JUL-94
Q	14-JUL-94
P	06-JUL-94
N	05-JUL-94
M	28-JUN-94
L	03-JUN-94
K	27-MAY-94
J	24-MAY-94
H	16-MAY-94
G	13-MAY-94
F	26-APR-94
E	18-APR-94
D	12-APR-94
C	06-APR-94
B	29-MAR-94
A	25-FEB-94

THIS PRINT IS THE PROPERTY OF BELOIT CORPORATION, A HARNISCHFEGER INDUSTRIES COMPANY. THE INFORMATION THEREON IS SUBMITTED IN CONFIDENCE

U OF M: IN
DRAW DATE: 16-FEB-94
BUC
BNC: 50-9900
CLASS. OF CHAR.: CRITICAL
VAUGA
ORDER NO.: 8499
FILE NO.: 134828
DEPT. NO.: 063
DATE: 07-DEC-93
CUSTOMER NAME: FRASER PAPER, LTD.
MILL: MADAWASKA, ME
MACH. NO.: C-2
DRAWN: PBS
CHK'D.: SJZ
APP'D.1: SJZ
APP'D.2: MLT
HAND: LH
TYPE: SF
GRADE: COATED
SPEED: 7500
WIDTH: 212
TITLE - LIST OF COMPONENTS: WINDER LC. SFM-V-60
IDENTIFICATION NUMBER: LC-2773-50-4-0

BELOIT CORPORATION
BELOIT LENOX DIVISION
P.O. BOX 998, LENOX, MASSACHUSETTS, U.S.A. 01240

BCL-CR00

LIST OF COMPONENTS

SHEET OF 2

RSP	ITEM		QUAN.	DESCRIPTION	WIDTH	LENGTH	U OF M	SYMBOL	MATERIAL	SPL INS	CU PR	SEQ	CU PRINT RELEASE DATE	MANUFACT. RELEASE DATE
	0A	00	REF	UNWIND LC				LC-2773-80-0-0						
	0B	00	REF	WINDER LC				LC-2773-50-4-0						
	0C	00	REF	BASEPLATE LC				LC-2773-94-0-0						
	0D	00	REF	ELECTRICAL CONTROLS LC				LC-2773-92-1-0						
	0E	00	REF	PNEUMATIC & HYDRAULIC CONTROLS LC				LC-2773-91-1-0						
	0F	00	REF	DRIVE LC				LC-2773-37-0-0						
	0G	00	REF	SPARE PARTS LC				LC-2773-50-4-1						
	0H	00	REF	WINDER SPEC SHEET				SPEC-2773-50-4-0						
	0I	00	REF	UNWIND ARRANGEMENT DRAWING				MA-2773-80-0-0						
	0J	00	REF	WINDER ARRANGEMENT DRAWING				MA-2773-50-4-0						
	0K	00	REF	WINDER GAGE VIEW										
	0L	00	REF	ELECTRIC MOTOR LIST				ML-2773-37-0-0						
				MAJOR SPARE PARTS:										
	01	00	1	SLIDE ASSY. HYD CHUCKING										
	01	01	1	MOTOR. ELECT-AC-.75 HP-1800 RPM-60 HZ. 575V. DFT80K4 FRAME.				50-5436-0158-0-003					11-JUL-94	11-JUL-94
				STD BRAKE W/230 VOLT COIL. OPTIONAL FLANGE. BO=160MM				293224-005						11-JUL-94
	01	02	1	PROX. SWITCH ASSEMBLY										
	01	03	1	ROLL DATA. SPARE 10.5 DIA SPREADER				50-5436-0148-0-003					11-JUL-94	11-JUL-94
	01	04	6	ROLL. MTG. ARTICULATING RIDER				RD-2773-50-4-9			1		11-JUL-94	11-JUL-94
	01	05	1	UNWIND CLUTCH/BRAKE ASSEMBLY. DROP-IN SPARE				50-2703-0011-0-001			1		11-JUL-94	11-JUL-94
	01	06	1	ROLL DATA. 30.0 WINDER DRUM (2ND)				80-3720-0023			1		11-JUL-94	11-JUL-94
								RD-2773-50-4-8			1		11-JUL-94	11-JUL-94
				UNWIND CLUTCH:										
	02	00	1	BRG. OUTER RACE-SAGINAW #5704798 W/ 1.0 X .5 X 5.5 LG. KWY				231876-002						11-JUL-94
	02	01	1	BRG. BALL-FAG #XLS 11				232216-026						11-JUL-94
	02	02	1	RING. RETAINING-SPIROLOX #RSN-1100. 11.0				211867-003						11-JUL-94
	02	03	2	WHEEL. HAMILTON #W-420-D-3/4				228835-028						11-JUL-94
	02	04	1	AIR CYL. 5.0 BORE X 15.0 STR				274251D400						11-JUL-94
	02	05	1	SWITCH. PROXIMITY-AC/DC-5MM RANGE A-B #B71TM-B5N18-N3				284611-195						11-JUL-94
	02	06	2	BEARING. SLEEVE										
				WINDER DRUM BRG.										
	03	00	2	BRG. SPHR #22330 K-W33				235713-035						11-JUL-94
				MECH.-PIVOTING CORE SLIDE ASSEMBLY										
	04	00	8	BRG. ROLLER-TORRINGTON #20NBF2040YJ				234688-001						11-JUL-94
	04	01	2	BUSHING				WCC-5C0547-2						11-JUL-94
	04	02	2	BRG. SLEEVE-GARLOCK #40DU56				231225-042						11-JUL-94
	04	03	4	BRG. SLEEVE-GARLOCK #40DU72				231225-041						11-JUL-94
	04	04	2	WORM GEAR				WCC-5B0613-1						11-JUL-94
	04	05	2	HYD CYL. 2.5 BORE X 6.0 STR				274445D049						11-JUL-94
	04	06	8	CAM FOLLOWER. MCGILL #CCFE-2-SB				237135-015						11-JUL-94
	04	07	2	WORM. BOSTON GEAR #H1607 RH				245358-001						11-JUL-94

L/C LEGEND	
UOM -	UNIT OF MEASURE
IN -	U.S. INCH
UD -	DUAL DIM. (U.S. INCH/METRIC EQUIVALENT)
MM -	METRIC

PROCESSING		
FUNCTION	BY	DATE
LIST OF COMPONENTS		
KEY PUNCH		
DRAWING PROCESS		

REVISION	
03-NOV-94	
05-OCT-94	
06-SEP-94	
20-JUL-94	

THIS PRINT IS THE PROPERTY OF BELOIT CORPORATION, A MANNISCHFEGER INDUSTRIES COMPANY. THE INFORMATION THEREON IS SUBMITTED IN CONFIDENCE

U OF M: IN	CLASS. OF CHAR.: CRITICAL	ORDER NO.: 8499	CUSTOMER NAME: FRASER PAPER, LTD.							BELOIT CORPORATION	
DRAW DATE: 11-JUL-94		FILE NO.: 134828	MILL: MADAWASKA, ME	MACH. NO.: C-2						BELOIT LENOX DIVISION	
BUC	MAJOR	DEPT. NO.: 063	DRAWN: PBS	CHK'D.: MLT	APP'D.1: MLT	APP'D.2: MLT	HAND: LH	TYPE: SF	GRADE: COATED	SPEED: 7500	WIDTH: 212
BNC: 50-9900		DATE: 24-JUN-94	TITLE - LIST OF COMPONENTS: SPARE PARTS L/C						IDENTIFICATION NUMBER: LC-2773-50-4-1		

BEL-CADD® JAN 17 FEB 95 9:10:11:FRW:B -1-53-42?: 18G:LC-2773-50-4-1

LIST OF COMPONENTS

RSP	ITEM		QUAN.	DESCRIPTION	WIDTH	LENGTH	U OF M	SYMBOL	MATERIAL	SPL INS	CU PR	SEQ	CU PRINT RELEASE DATE	MANUFACT. RELEASE DATE
	04	08	12	BRG. THRUST ROLLER-TORRINGTON #NTA-1018				234851-002						11-JUL-94
	04	09	12	BRG. SLEEVE-OILITE #AA-832-6				231276-209						11-JUL-94
	04	10	2	HYD CYL. 1.5 BORE X 47.5 STR				274442D396						11-JUL-94
	04	11	2	SWITCH. PROXIMITY-AC/DC-NAMCO #EE230-1 78 20				284611-162						11-JUL-94
	04	12	2	COUPLING. FULL-LOVEJOY #L-070				238215-155						11-JUL-94
	04	13	4	GEAR. HELICAL-BOSTON GEAR #H1236A				244741-002						11-JUL-94
	04	14	4	BRG. SLEEVE-GARLOCK #48DU40				231225-055						11-JUL-94
	04	17	2	SWITCH. PROXIMITY-AC-8MM RANGE P+F #NJ8-18GK-WS				284611-195						29-SEP-94
	04	18	2	SHOCK ABSORBER. EFDYN #SAS 3/4-3-PS-99				248425-043						11-JUL-94
	04	19	2	CONNECTOR. PLUG-FEM-3 POLE-BRAD HARRISON #40974. 20 FT LEAD				282972-010						29-SEP-94
				ELECTRICAL CONTROLS										
	05	01	1	RESOLVER. AMCI #HT-20-10				287319-693						11-JUL-94
	05	02	1	MOTOR. ELECT-AC-.75 HP-1800 RPM-60 HZ. 575V. DFT80K4 FRAME. STD BRAKE W/230 VOLT COIL. OPTIONAL FLANGE. BD=160MM				293224-005						11-JUL-94

L/C LEGEND	
UOM -	UNIT OF MEASURE
IN - U.S. INCH	
UD - DUAL DIM. (U.S. INCH/METRIC EQUIVALENT)	
MM - METRIC	

PROCESSING		
FUNCTION	BY	DATE
LIST OF COMPONENTS		
KEY PUNCH		
DRAWING PROCESS		

REVISION	
D	03-NOV-94
C	05-OCT-94
B	29-SEP-94
A	20-JUL-94

THIS PRINT IS THE PROPERTY OF BELOIT CORPORATION, A HARNISCHFEGER INDUSTRIES COMPANY. THE INFORMATION THEREON IS SUBMITTED IN CONFIDENCE

U OF M: IN	CLASS. OF CHAR.: CRITICAL	ORDER NO.: 8499	CUSTOMER NAME: FRASER PAPER, LTD.						
CHAR DATE: 11-JUL-94		FILE NO.: 134828	MILL: MADAWASKA, ME	MACH. NO.: C-2					
SUC	MAJOR	DEPT. NO.: 063	DRAWN: PBS	CHK'D.: MLT	APP'D.1: MLT	APP'D.2: MLT	HAND: LH	TYPE: SF	GRADE: COATED / SPEED: 7500 / WIDTH: 212
DNC: 50-9900		DATE: 24-JUN-94	TITLE - LIST OF COMPONENTS: SPARE PARTS L/C						IDENTIFICATION NUMBER: LC-2773-50-4-1

BELOIT CORPORATION
BELOIT LENOX DIVISION
P.O. BOX 994 LENOX, MASSACHUSETTS, U.S.A. 01240

BEL-CA000-138

LIST OF COMPONENTS

SHEET 1 1

RSP	ITEM		QUAN.	DESCRIPTION	WIDTH	LENGTH	OF M	SYMBOL	MATERIAL	SPL INS	CU PR	SEQ	CU PRINT RELEASE DATE	MANUFACT. RELEASE DATE
	0A	00	REF	UNWIND LC				LC-2773-80-0-0						
	0B	00	REF	WINDER LC				LC-2773-50-4-0						
	0C	00	REF	BASEPLATE LC				LC-2773-94-0-0						
	0D	00	REF	ELECTRICAL CONTROLS LC				LC-2773-92-1-0						
	0E	00	REF	PNEUMATIC & HYDRAULIC CONTROLS LC				LC-2773-91-1-0						
	0F	00	REF	DRIVE LC				LC-2773-37-0-0						
	0G	00	REF	SPARE PARTS LC										
	0H	00	REF	WINDER SPEC SHEET				SPEC-2773-50-4-0						
	0I	00	REF	UNWIND ARRANGEMENT DRAWING				MA-2773-80-0-0			1		01-NOV-94	01-NOV-94
	0J	00	REF	WINDER ARRANGEMENT DRAWING				MA-2773-50-0-0						
	0K	00	REF	REELSPOOL DRAWING										
	01	00		FRAMES - 90" DIA - <30" DIA SPOOL										
				TOP SIDELAY/CRANE LOADED										
	01	01	1	UNWIND FRAME ASSEMBLY				80-0546-0030			1		01-JUN-94	01-JUN-94
	01	02	N/A	SPOOL RECEIVER / HOLDER ASSEMBLY										
	01	03	1	CRANE HOOK STOP ASSEMBLY				80-3650-0072			1		27-JUN-94	27-JUN-94
	01	04	N/A	SPOOL EJECTOR ASSEMBLY										
	01	05	1	SIDELAY POSITION INDICATOR ASSY				80-3802-0006			1		01-JUN-94	01-JUN-94
	01	06	1	SAFETY EQUIPMENT, UNWIND - TOP OSCILLATING				80-7310-0011			2		01-JUN-94	01-JUN-94
	05	00		CLUTCH / BRAKE ASSEMBLY										
	05	01	1	UNWIND CLUTCH ASSEMBLY				80-3641-0019-0-001			1		16-JUN-94	16-JUN-94
	05	02	1	UNWIND BRAKE ASSEMBLY				80-3720-0021			1		01-JUN-94	01-JUN-94
	05	03	1	GUARDS, UNWIND				80-7320-0028			1		16-JUN-94	16-JUN-94
	05	04	1	LIMIT SWITCH ARRANGEMENT - BRAKE & CLUTCH				80-1510-0076			1		16-JUN-94	16-JUN-94
	05	05	1	SAFETY EQUIPMENT - BRAKE & CLUTCH				80-7310-0010			2		01-JUN-94	01-JUN-94
	06	00		UNWIND DRIVE										
	06	01	1	COUPLING, FULL-FALK				2383250292			1		-------	07-JUL-94
	07	00		UNWIND PIPING										
	07	01	1	UNWIND PIPING ASSEMBLY				80-3829-0022			2		01-JUN-94	01-JUN-94

L/C LEGEND	
UOM -	UNIT OF MEASURE
IN -	U.S. INCH
UD -	DUAL DIM. (U.S. INCH/METRIC EQUIVALENT)
MM -	METRIC

PROCESSING		
FUNCTION	BY	DATE
LIST OF COMPONENTS		
KEY PUNCH		
DRAWING PROCESS		

© 1992, BELOIT CORPORATION. THE INFORMATION ON THIS PRINT IS SUBMITTED IN CONFIDENCE AND MAY NOT BE COPIED.

REVISION	
D	01-NOV-94
C	07-JUL-94
B	27-JUN-94
A	16-JUN-94

U OF M: IN
DRAW DATE: 01-JUN-94
BUC:
BNC: 80-9900
CLASS. OF CHAR.: CRITICAL / MAJOR

ORDER NO. 8499
FILE NO. 134828
DEPT. NO. 063
DATE 12-JAN-94

CUSTOMER NAME: FRASER PAPER, LTD.
MILL: MADAWASKA, ME
MACH. NO.: C-2

DRWN	CHK'D.	APP'D.1	APP'D.2	HAND	TYPE
EVS	SJZ	SJZ	MLT	LH	SF

TITLE - LIST OF COMPONENTS: UNWIND, TOP SIDELAY LC

BELOIT CORPORATION
BELOIT LENOX DIVISION
P.O. BOX 948, LENOX, MASSACHUSETTS, U.S.A. 01240

GRADE	SPEED	WIDTH
COATED	7500	212

IDENTIFICATION NUMBER: LC-2773-80-0-0

BEL-CADD

LIST OF COMPONENTS

ASP	ITEM		QUAN.	DESCRIPTION	WIDTH	LENGTH	U M	SYMBOL	MATERIAL	SPL INS	CU PR	SEQ	CU PRINT RELEASE DATE	MANUFACT. RELEASE DATE
	0A	00	REF	UNWIND LC				LC-2773-80-0-0						
	0B	00	REF	WINDER LC				LC-2773-50-4-0						
	0C	00	REF	BASEPLATE LC				LC-2773-94-0-0						
	0D	00	REF	ELECTRICAL CONTROLS LC				LC-2773-92-1-0						
	0E	00	REF	PNEUMATIC & HYDRAULIC CONTROLS LC				LC-2773-91-1-0						
	0F	00	REF	DRIVE LC				LC-2773-37-0-0						
	0G	00	REF	MACHINE CONTROLS SPARE PARTS LC				LC-2773-91-1-1						
	0H	00	REF	ELECTRIC CONTROLS SPARE PARTS LC				LC-2773-92-1-1						
	0I	00	REF	WINDER SPEC SHEET				SPEC-2773-50-4-0						
	0J	00	REF	UNWIND ARRANGEMENT DRAWING				MA-2773-80-0-0						
	0K	00	REF	WINDER ARRANGEMENT DRAWING				MA-2773-50-4-0						
	0L	00	REF	WINDER GAGE VIEW										
	0M	00	REF	ELECTRIC MOTOR LIST				ML-2773-37-0-0						
	80	00		**PNEUMATIC CONTROLS**										
	80	01	001	PNEUMATIC SCHEMATIC, WINDER										
	80	02	REF	PNEUMATIC SCHEMATIC, WINDER				91-5088-0393-0			1		10-MAY-94	10-MAY-94
	80	03	REF	PNEUMATIC SCHEMATIC, WINDER				91-5088-0393-1			1		10-MAY-94	10-MAY-94
	80	04	REF	PNEUMATIC SCHEMATIC, WINDER				91-5088-0393-2			1		10-MAY-94	10-MAY-94
	80	05	REF	PNEUMATIC SCHEMATIC, WINDER				91-5088-0393-3			1		10-MAY-94	10-MAY-94
	80	06	REF	PNEUMATIC SCHEMATIC, WINDER				91-5088-0393-4			1		10-MAY-94	10-MAY-94
	80	07	REF	PNEUMATIC SCHEMATIC, WINDER				91-5088-0393-5			1		10-MAY-94	10-MAY-94
	80	08	REF	PNEUMATIC SCHEMATIC, WINDER				91-5088-0393-6			1		10-MAY-94	10-MAY-94
								91-5088-0393-7			1		10-MAY-94	10-MAY-94
	82	00		**PNEUMATIC ENCLOSURES**										
	82	01	001	PNEUMATIC ENCLOSURE -UNWIND										
	82	02	001	PNEUMATIC ENCLOSURE -SLITTER LOADING (RIGHT HAND ENCL.)				W15181S			1		10-MAY-94	10-MAY-94
	82	03	001	PNEUMATIC ENCLOSURE -LEAD-IN THRDR./HLDR. (RIGHT HAND ENCL.)				W14924S			2		10-MAY-94	10-MAY-94
	82	04	001	PNEUMATIC ENCLOSURE -WINDER FRAME (LEFT HAND MACHINE)				W14935S			2		10-MAY-94	10-MAY-94
	82	05	001	PNEUMATIC ENCLOSURE -RIDER ROLL LOADING				W15182S			1		10-MAY-94	10-MAY-94
								W14925S			2		10-MAY-94	10-MAY-94
	85	00		**HYDRAULIC CONTROLS**										
	85	01	REF	HYDRAULIC SCHEMATIC, WINDER										
	85	02	001	HYDRAULIC SCHEMATIC, WINDER				91-5020-0257-0			1		25-APR-94	25-APR-94
	85	03	001	HYDRAULIC SCHEMATIC, WINDER				91-5020-0257-1			1		25-APR-94	25-APR-94
	85	04	001	HYDRAULIC SCHEMATIC, WINDER				91-5020-0257-2			1		25-APR-94	25-APR-94
	85	05	001	HYDRAULIC SCHEMATIC, WINDER				91-5020-0257-3			1		25-APR-94	25-APR-94
								91-5020-0257-4			1		25-APR-94	25-APR-94

L/C LEGEND	
UOM -	UNIT OF MEASURE
IN -	U.S. INCH
DD -	DUAL DIM. (U.S. INCH/METRIC EQUIVALENT)
MM -	METRIC

PROCESSING		
FUNCTION	BY	DATE
LIST OF COMPONENTS		
KEY PUNCH		
DRAWING PROCESS		

© 1992 BELOIT CORPORATION. THE INFORMATION ON THIS PRINT IS SUBMITTED IN CONFIDENCE AND MAY NOT BE COPIED.

A	10-MAY-94	REVISION	U OF M IN	CLASS. OF CHAR.	ORDER NO. 8499	CUSTOMER NAME FRASER PAPER COMPANY									
			DWGR DATE 25-APR-94	CRITICAL	FILE NO.	MILL MADAWASKA, ME		MACH. NO. C-2							
			DUC		DEPT. NO. 062	DRAWN DGM	CHK'D. DKW	APP'D.1 JTM	APP'D.2 RSK	HAND LEFT	TYPE SFM	GRIDE COATED	SPEED 7500	WIDTH 212	
			BNC LC-2773	MAJOR	DATE 07-DEC-93	TITLE - LIST OF COMPONENTS MACHINE CONTROLS LC						IDENTIFICATION NUMBER LC-2773-91-1-0			

BELOIT CORPORATION
BELOIT LENOX DIVISION
P.O. BOX 968 LENOX, MASSACHUSETTS, U.S.A. 01240

LIST OF CO[illegible]ENTS

SH [illegible] OF 1

RSP	ITEM		QUAN.	DESCRIPTION	WIDTH	LENGTH	UM	SYMBOL	MATERIAL	SPL INS	CU PA	SEQ	CU PAINT RELEASE DATE	MANUFACT. RELEASE DATE
	0A	00	REF	UNWIND LC				LC-2773-80-0-0						
	0B	00	REF	WINDER LC				LC-2773-50-4-0						
	0C	00	REF	BASEPLATE LC				LC-2773-94-0-0						
	0D	00	REF	ELECTRICAL CONTROLS LC				LC-2773-92-1-0						
	0E	00	REF	PNEUMATIC & HYDRAULIC CONTROLS LC				LC-2773-91-1-0						
	0F	00	REF	DRIVE LC				LC-2773-37-0-0						
	0G	00	REF	ELECTRIC CONTROLS SPARE PARTS LC				LC-2773-92-1-1						
	0H	00	REF	WINDER SPEC SHEET				SPEC-2773-50-4-0						
	0I	00	REF	UNWIND ARRANGEMENT DRAWING				MA-2773-80-0-0						
	0J	00	REF	WINDER ARRANGEMENT DRAWING				MA-2773-50-4-0						
	0K	00	REF	WINDER GAGE VIEW										
	0L	00	REF	ELECTRIC MOTOR LIST				ML-2773-37-0-0						
	01	00		**HYDRAULIC SPARES**										
	01	01	001	CONTROL DEVICES, HYDRAULIC SPARES				91-5026-0027			1		11-MAY-94	11-MAY-94

L/C LEGEND	
UOM -	UNIT OF MEASURE
IN -	U.S. INCH
UD -	DUAL DIM. (U.S. INCH/METRIC EQUIVALENT)
MM -	METRIC

PROCESSING		
FUNCTION	BY	DATE
LIST OF COMPONENTS		
KEY PUNCH		
DRAWING PROCESS		

© 1992 BELOIT CORPORATION. THE INFORMATION ON THIS PRINT IS SUBMITTED IN CONFIDENCE AND MAY NOT BE COPIED.

REVISION

U OF M	CLASS. OF CHAR.	ORDER NO.	CUSTOMER NAME		
IN		8499	FRASER PAPER COMPANY		
DRAW DATE 11-MAY-94	CRITICAL	FILE NO.	MILL MADAWASKA, ME	MACH. NO. C-2	
BUC	MAJOR	DEPT. NO. 062	DRAWN DGM	CHK'D. DKW	APP'D.1 DKW
DWG LC-2773		DATE 07-MAY-94	TITLE - LIST OF COMPONENTS MACHINE CONTROLS SPARE PARTS LC		

BELOIT CORPORATION
BELOIT LENOX DIVISION
P.O. BOX 998, LENOX, MASSACHUSETTS, U.S.A. 01240

APP'D.2	HAND	TYPE	GRADE	SPEED	WIDTH
RSK	LEFT	SFM	COATED	7500	212

IDENTIFICATION NUMBER LC-2773-91-1-1

LIST OF COMPONENTS

ITEM	QUAN.	DESCRIPTION	WIDTH	LGTH	U OF M	SYMBOL	MATERIAL	SPL INS	CU PR	SEQ	CU PRINT RELEASE DATE	ENGINEERING RELEASE DATE
6594	REF	ELEMENTARY DIAGRAM, WINDER				92-5001-0098-44			1		22-JUL-94	22-JUL-94
6595	REF	ELEMENTARY DIAGRAM, WINDER				92-5001-0098-45			1		22-JUL-94	22-JUL-94
6596	REF	ELEMENTARY DIAGRAM, WINDER				92-5001-0098-46			1		22-JUL-94	22-JUL-94
6597	REF	ELEMENTARY DIAGRAM, WINDER				92-5001-0098-47			1		22-JUL-94	22-JUL-94
6598	REF	ELEMENTARY DIAGRAM, WINDER				92-5001-0098-48			1		22-JUL-94	22-JUL-94
6599	REF	ELEMENTARY DIAGRAM, WINDER				92-5001-0098-49			1		22-JUL-94	22-JUL-94
65100	REF	ELEMENTARY DIAGRAM, WINDER				92-5001-0098-50			1		22-JUL-94	22-JUL-94
65101	REF	ELEMENTARY DIAGRAM, WINDER				92-5001-0098-51			1		22-JUL-94	22-JUL-94
65102	REF	ELEMENTARY DIAGRAM, WINDER				92-5001-0098-52			1		22-JUL-94	22-JUL-94
65103	REF	ELEMENTARY DIAGRAM, WINDER				92-5001-0098-53			1		22-JUL-94	22-JUL-94
65104	REF	ELEMENTARY DIAGRAM, WINDER				92-5001-0098-54			1		22-JUL-94	22-JUL-94
65105	REF	ELEMENTARY DIAGRAM, WINDER				92-5001-0098-55			1		22-JUL-94	22-JUL-94
65106	REF	ELEMENTARY DIAGRAM, WINDER				92-5001-0098-56			1		22-JUL-94	22-JUL-94
7000		CONNECTION DIAGRAM, ARTICULATING RIDER ROLL										
7001	1	CONNECTION DIAGRAM, ARTICULATING RIDER ROLL				92-5021-0006-1			1		12-MAY-94	12-MAY-94
7002	REF	CONNECTION DIAGRAM, ARTICULATING RIDER ROLL				92-5021-0006-2			1		12-MAY-94	12-MAY-94

L/C LEGEND	
UOM -	UNIT OF MEASURE
IN -	U.S. INCH
UO -	OTHER DIM. (U.S. INCH/METRIC EQUIVALENT)
MM -	METRIC

PROCESSING		
FUNCTION	BY	DATE
LIST OF COMPONENTS		
KEY PUNCH		
DRAWING PROCESS		

© 1992, BELOIT CORPORATION. THE INFORMATION ON THIS PRINT IS SUBMITTED IN CONFIDENCE AND MAY NOT BE COPIED.

REVISION	U OF M	CLASS. OF ENG.	ORDER NO.	CUSTOMER NAME		
22-JUL-94	IN		8499	FRASER PAPER COMPANY		
12-MAY-94	DWG DATE 12-MAY-94	CRITICAL	FILE NO.	MADAWASKA, ME	MACH. NO. C-2	BELOIT CORPORATION — BELOIT LENOX DIVISION
	BUC	MAJOR	DEPT. NO. 062	DRAWN DCW	CHK'D. DKW	RPM'D.1 RSK
	UNC LC-2773		DATE 02-MAY-94	TITLE - LIST OF COMPONENTS ELECTRIC CONTROLS LC		

RPM'D.2	HAND	TYPE	GRADE	SPEED	WIDTH
	LEFT	SFM	COATED	7500	212

IDENTIFICATION NUMBER: LC-2773-92-1-0

LIST OF COMPONENTS

ITEM	QUAN.	DESCRIPTION	WIDTH	L	U OF M	SYMBOL	MATERIAL	SPL INS	CU PR	S E G	CU PRINT RELEASE DATE	DATE
		ELEMENTARY DIAGRAM. WINDER										
65 50	REF	ELEMENTARY DIAGRAM. WINDER				92-5001-0098-0			1		22-JUL-94	22-JUL-94
65 51	REF	ELEMENTARY DIAGRAM. WINDER				92-5001-0098-1			1		22-JUL-94	22-JUL-94
65 52	REF	ELEMENTARY DIAGRAM. WINDER				92-5001-0098-2			1		22-JUL-94	22-JUL-94
65 53	REF	ELEMENTARY DIAGRAM. WINDER				92-5001-0098-3			1		22-JUL-94	22-JUL-94
65 54	REF	ELEMENTARY DIAGRAM. WINDER				92-5001-0098-4			1		22-JUL-94	22-JUL-94
65 55	REF	ELEMENTARY DIAGRAM. WINDER				92-5001-0098-5			1		22-JUL-94	22-JUL-94
65 56	REF	ELEMENTARY DIAGRAM. WINDER				92-5001-0098-6			1		22-JUL-94	22-JUL-94
65 57	REF	ELEMENTARY DIAGRAM. WINDER				92-5001-0098-7			1		22-JUL-94	22-JUL-94
65 58	REF	ELEMENTARY DIAGRAM. WINDER				92-5001-0098-8			1		22-JUL-94	22-JUL-94
65 59	REF	ELEMENTARY DIAGRAM. WINDER				92-5001-0098-9			1		22-JUL-94	22-JUL-94
65 60	REF	ELEMENTARY DIAGRAM. WINDER				92-5001-0098-10			1		22-JUL-94	22-JUL-94
65 61	REF	ELEMENTARY DIAGRAM. WINDER				92-5001-0098-11			1		22-JUL-94	22-JUL-94
65 62	REF	ELEMENTARY DIAGRAM. WINDER				92-5001-0098-12			1		22-JUL-94	22-JUL-94
65 63	REF	ELEMENTARY DIAGRAM. WINDER				92-5001-0098-13			1		22-JUL-94	22-JUL-94
65 64	REF	ELEMENTARY DIAGRAM. WINDER				92-5001-0098-14			1		22-JUL-94	22-JUL-94
65 65	REF	ELEMENTARY DIAGRAM. WINDER				92-5001-0098-15			1		22-JUL-94	22-JUL-94
65 66	REF	ELEMENTARY DIAGRAM. WINDER				92-5001-0098-16			1		22-JUL-94	22-JUL-94
65 67	REF	ELEMENTARY DIAGRAM. WINDER				92-5001-0098-17			1		22-JUL-94	22-JUL-94
65 68	REF	ELEMENTARY DIAGRAM. WINDER				92-5001-0098-18			1		22-JUL-94	22-JUL-94
65 69	REF	ELEMENTARY DIAGRAM. WINDER				92-5001-0098-19			1		22-JUL-94	22-JUL-94
65 70	REF	ELEMENTARY DIAGRAM. WINDER				92-5001-0098-20			1		22-JUL-94	22-JUL-94
65 71	REF	ELEMENTARY DIAGRAM. WINDER				92-5001-0098-21			1		22-JUL-94	22-JUL-94
65 72	REF	ELEMENTARY DIAGRAM. WINDER				92-5001-0098-22			1		22-JUL-94	22-JUL-94
65 73	REF	ELEMENTARY DIAGRAM. WINDER				92-5001-0098-23			1		22-JUL-94	22-JUL-94
65 74	REF	ELEMENTARY DIAGRAM. WINDER				92-5001-0098-24			1		22-JUL-94	22-JUL-94
65 75	REF	ELEMENTARY DIAGRAM. WINDER				92-5001-0098-25			1		22-JUL-94	22-JUL-94
65 76	REF	ELEMENTARY DIAGRAM. WINDER				92-5001-0098-26			1		22-JUL-94	22-JUL-94
65 77	REF	ELEMENTARY DIAGRAM. WINDER				92-5001-0098-27			1		22-JUL-94	22-JUL-94
65 78	REF	ELEMENTARY DIAGRAM. WINDER				92-5001-0098-28			1		22-JUL-94	22-JUL-94
65 79	REF	ELEMENTARY DIAGRAM. WINDER				92-5001-0098-29			1		22-JUL-94	22-JUL-94
65 80	REF	ELEMENTARY DIAGRAM. WINDER				92-5001-0098-30			1		22-JUL-94	22-JUL-94
65 81	REF	ELEMENTARY DIAGRAM. WINDER				92-5001-0098-31			1		22-JUL-94	22-JUL-94
65 82	REF	ELEMENTARY DIAGRAM. WINDER				92-5001-0098-32			1		22-JUL-94	22-JUL-94
65 83	REF	ELEMENTARY DIAGRAM. WINDER				92-5001-0098-33			1		22-JUL-94	22-JUL-94
65 84	REF	ELEMENTARY DIAGRAM. WINDER				92-5001-0098-34			1		22-JUL-94	22-JUL-94
65 85	REF	ELEMENTARY DIAGRAM. WINDER				92-5001-0098-35			1		22-JUL-94	22-JUL-94
65 86	REF	ELEMENTARY DIAGRAM. WINDER				92-5001-0098-36			1		22-JUL-94	22-JUL-94
65 87	REF	ELEMENTARY DIAGRAM. WINDER				92-5001-0098-37			1		22-JUL-94	22-JUL-94
65 88	REF	ELEMENTARY DIAGRAM. WINDER				92-5001-0098-38			1		22-JUL-94	22-JUL-94
65 89	REF	ELEMENTARY DIAGRAM. WINDER				92-5001-0098-39			1		22-JUL-94	22-JUL-94
65 90	REF	ELEMENTARY DIAGRAM. WINDER				92-5001-0098-40			1		22-JUL-94	22-JUL-94
65 91	REF	ELEMENTARY DIAGRAM. WINDER				92-5001-0098-41			1		22-JUL-94	22-JUL-94
65 92	REF	ELEMENTARY DIAGRAM. WINDER				92-5001-0098-42			1		22-JUL-94	22-JUL-94
65 93	REF	ELEMENTARY DIAGRAM. WINDER				92-5001-0098-43			1		22-JUL-94	22-JUL-94

U OF M LEGEND

M - UNIT OF MEASURE
N - U.S. INCH
D - DUAL DIM. (U.S. INCH/METRIC EQUIVALENT)
M - METRIC

PROCESSING		
FUNCTION	BY	DATE
LIST OF COMPONENTS		
KEY PUNCH		
DRAWING PROCESS		

© 1992. BELOIT CORPORATION. THE INFORMATION ON THIS PRINT IS SUBMITTED IN CONFIDENCE AND MAY NOT BE COPIED.

REVISION	DATE
A	22-JUL-94
B	19-MAY-94

U OF M: IN
ORIG DATE: 12-MAY-94
BUC
BNC: LC-2773

CLASS. OF CHAR.: CRITICAL / MAJOR

ORDER NO.: 8409
FIN. NO.:
CUSTOMER NAME: FRASER PAPER COMPANY
MILL: MADAWASKA, ME
MACH. NO.: C-2

BELOIT CORPORATION
BELOIT LENOX DIVIS.
P.O. BOX 240 LENOX, MASSACHUSETTS U.S.A. 01240

JOB NO.	DRAWN	CHK'D	APP'D.1	APP'D.2	HAND	TYPE	GRADE	SPEED	WIDTH
062	DCW	DKW	RSK		LEFT	SFM	COATED	7500	212

DATE: 02-MAY-94
TITLE - LIST OF COMPONENTS: ELECTRIC CONTROLS LC
IDENTIFICATION NUMBER: LC-2773-92-1-0

LIST OF COMPONENTS

ITEM	QUAN.	DESCRIPTION	WIDTH	L.	U M	SYMBOL	MATERIAL	SPL INS	CU PR	S E Q	CU PRINT RELEASE DATE	PRINT. RELEASE DATE
A	00	REF	UNWIND LC			LC-2773-80-0-0						
B	00	REF	WINDER LC			LC-2773-50-4-0						
C	00	REF	BASEPLATE LC			LC-2773-94-0-0						
D	00	REF	ELECTRICAL CONTROLS LC			LC-2773-92-1-0						
E	00	REF	PNEUMATIC & HYDRAULIC CONTROLS LC			LC-2773-91-1-0						
F	00	REF	DRIVE LC			LC-2773-37-0-0						
0	00		**OPERATOR BENCHBOARD. WINDER**									
0	01	1	OPER. BENCHBOARD. WINDER PARTS LIST			91-5013-0064-0			1		12-MAY-94	12-MAY-94
0	02	REF	OPERATOR DEVICE LAYOUT			91-5013-0064-1			1		12-MAY-94	12-MAY-94
0	03	REF	FRONT INTERIOR PANEL			91-5013-0064-2			1		12-MAY-94	12-MAY-94
0	04	REF	BACK INTERIOR PANEL			91-5013-0064-3			1		12-MAY-94	12-MAY-94
0	05	REF	BENCHBOARD ENCLOSURE ASSEMBLY			91-5013-0064-4			1		12-MAY-94	12-MAY-94
0	06	001	BENCHBOARD ENCLOSURE FABRICATION			SF5561			1			12-MAY-94
1	00		**MAIN/AUXILIARY PLC ENCLOSURES**									
1	01	1	PLC ENCLOSURE ASSEMBLY			91-5017-0076-0			1		12-MAY-94	12-MAY-94
1	02	REF	PLC ENCLOSURE #100 PANEL			91-5017-0076-1			1		12-MAY-94	12-MAY-94
1	03	REF	PLC ENCLOSURE #1400 PANEL			91-5017-0076-2			1		12-MAY-94	12-MAY-94
1	04	1	CORE CHUCK DRIVE ENCLOSURE #130			91-5017-0077			1		19-MAY-94	19-MAY-94
0	00		**CONTROL STATIONS. ON MACHINE**									
0	01	1	WINDER CONTROL STATIONS			91-5003-0130-0			1		12-MAY-94	12-MAY-94
0	02	REF	WINDER SYSTEM PLAN VIEW			91-5003-0130-1			1		12-MAY-94	12-MAY-94
0	03	REF	WINDER FRONT SIDE ELEVATION			91-5003-0130-2			1		12-MAY-94	12-MAY-94
0	04	REF	WINDER BACK SIDE ELEVATION			91-5003-0130-3			1		12-MAY-94	12-MAY-94
0	20	REF	UNWIND/SLITTER CONTROL STATIONS			91-5003-0130-4			1		12-MAY-94	12-MAY-94
0	30	REF	WINDER CONTROL STATIONS			91-5003-0130-5			1		12-MAY-94	12-MAY-94
0	60	REF	WINDER FRAME PANELS			91-5003-0130-6			1		12-MAY-94	12-MAY-94
5	00		**ELECTRIC SYSTEM. PLC HARDWARE**									
5	01	1	PLC HARDWARE (ALLEN-BRADLEY)			92-5071-0054			1		12-MAY-94	12-MAY-94
5	02	REF	PLC PROGRAM LISTING			92-5043-0016						
			WINDER FIELD WIRING									
5	10	REF	INTERCONNECT SPECIFICATION			1-88-681			2			

L/C LEGEND

UOM - UNIT OF MEASURE
N - U.S. INCH
D - DUAL DIM (U.S. INCH/METRIC EQUIVALENT)
M - METRIC

PROCESSING

FUNCTION	BY	DATE
LIST OF COMPONENTS		
KEY PUNCH		
DRAWING PROCESS		

© 1992 BELOIT CORPORATION. THE INFORMATION ON THIS PRINT IS SUBMITTED IN CONFIDENCE AND MAY NOT BE COPIED.

REVISION	DATE
B	22-JUL-94
A	19-MAY-94

U OF M: IN
DWN DATE: 12-MAY-94
BUC
BNC: LC-2773

CLASS. OF CHG: CRITICAL / MAJOR

ORDER NO.: 8499
FILE NO.:
CUSTOMER NAME: FRASER PAPER COMPANY
MILL: MADAWASKA, ME
MACH. NO.: C-2

BELOIT CORPORATION
BELOIT LINX DIVISION
P.O. BOX 848 LYNN, MASSACHUSETTS U.S.A. 01942

DEPT. NO.	DRAWN	CHK'D.	APP'D. 1	APP'D. 2	HAND	TYPE	GRADE	SPEED	WIDTH
062	OCW	DKW	RSK		LEFT	SFM	COATED	7500	212

DATE: 02-MAY-94
TITLE - LIST OF COMPONENTS: ELECTRIC CONTROLS LC
IDENTIFICATION NUMBER: LC-2773-92-1-0

LIST OF COMPONENTS

RSP	ITEM	QUAN.	DESCRIPTION	WIDTH	LENGTH	M	SYMBOL	MATERIAL	SPL INS	CU PR	SEQ	CU PRINT RELEASE DATE	MRL DATE	
	0A 00	REF	UNWIND LC				LC-2773-80-0-0							
	0B 00	REF	WINDER LC				LC-2773-50-4-0							
	0C 00	REF	BASEPLATE LC				LC-2773-94-0-0							
	0D 00	REF	ELECTRICAL CONTROLS LC				LC-2773-92-1-0							
	0E 00	REF	PNEUMATIC & HYDRAULIC CONTROLS LC				LC-2773-91-1-0							
	0F 00	REF	DRIVE LC				LC-2773-37-0-0							
	0G 00	REF	SPARE PARTS LC											
	0H 00	REF	WINDER SPEC SHEET				SPEC-2773-50-4-0							
	0J 00	REF	UNWIND ARRANGEMENT DRAWING				MA-2773-80-0-0							
	0J 00	REF	WINDER ARRANGEMENT DRAWING				MA-2773-50-4-0							
	42 00	REF	BASEPLATE / FOUNDATIONS											
	42 01	1	FOUNDATION DRAWING				94-5510-0105			1		18-APR-94	09-MAY-94	
	42 02	1	SAFETY EQUIPMENT - FLOOR PAINT				50-7310-0042			2		18-APR-94	---------	

L/C LEGEND	
UOM -	UNIT OF MEASURE
IN -	U.S. INCH
UD -	DUAL DIM. (U.S. INCH/METRIC EQUIVALENT)
MM -	METRIC

PROCESSING		
FUNCTION	BY	DATE
LIST OF COMPONENTS		
KEY PUNCH		
DRAWING PROCESS		

© 1992. BELOIT CORPORATION. THE INFORMATION ON THIS PRINT IS SUBMITTED IN CONFIDENCE AND MAY NOT BE COPIED.

A	09-MAY-94	REVISED	U OF M IN	CLASS. OF CHAR.	ORDER NO. 8499	CUSTOMER NAME FRASER PAPER COMPANY					BELOIT CORPORATION		
			DRAW DATE 18-APR-94	CRITICAL	FILE NO. 134826	MILL MACAWASKA, ME			MACH. NO. C-2		BELOIT LENOX DIVISION		
			BUC	MAJOR	DEPT. NO. 063	DRAWN EVS	CHK'D. SJZ	APP'D.1	APP'D.2 GRC	HAND LH	TYPE SF	GRADE COATED	SPEED 7500	WIDTH 212
			BNC 94-9900		DATE 12-JAN-94	TITLE - LIST OF COMPONENTS BASEPLATE LC						IDENTIFICATION NUMBER LC-2773-94-0-0	

BEL-CAMM-138

LIST OF C[illegible]ONENTS

SHEET 1

R S P	ITEM		QUAN.	DESCRIPTION	WIDTH	LENGTH	U OF M	SYMBOL	MATERIAL	SPL INS	CU PA	S E Q	CU PRINT RELEASE DATE	MANUFACT. RELEASE DATE
	0A	00	REF	UNWIND LC				LC-2773-80-0-0						
	0B	00	REF	WINDER LC				LC-2773-50-4-0						
	0C	00	REF	BASEPLATE LC				LC-2773-94-0-0						
	0D	00	REF	ELECTRICAL CONTROLS LC				LC-2773-92-1-0						
	0E	00	REF	PNEUMATIC & HYDRAULIC CONTROLS LC				LC-2773-91-1-0						
	0F	00	REF	DRIVE LC				LC-2773-37-0-0						
	0G	00	REF	SPARE PARTS LC										
	0H	00	REF	WINDER SPEC SHEET				SPEC-2773-50-4-0						
	0I	00	REF	UNWIND ARRANGEMENT DRAWING				MA-2773-80-0-0						
	0J	00	REF	WINDER ARRANGEMENT DRAWING				MA-2773-50-4-0						
	42	00	REF	BASEPLATE / FOUNDATIONS										
	42	01	1	FOUNDATION DRAWING				94-5510-0105			1		18-APR-94	09-MAY-94
	42	02	1	SAFETY EQUIPMENT - FLOOR PAINT				50-7310-0042			2		18-APR-94	----------

L/C LEGEND	
UOM -	UNIT OF MEASURE
IN -	U.S. INCH
UD -	DUAL DIM. (U.S. INCH/METRIC EQUIVALENT)
MM -	METRIC

PROCESSING		
FUNCTION	BY	DATE
LIST OF COMPONENTS		
KEY PUNCH		
DRAWING PROCESS		

© 1992, BELOIT CORPORATION. THE INFORMATION ON THIS PRINT IS SUBMITTED IN CONFIDENCE AND MAY NOT BE COPIED.

A	09-MAY-94	REVISION	U OF M IN	CLASS. OF CHAR. CRITICAL	ORDER NO. 8499	CUSTOMER NAME FRASER PAPER COMPANY				BELOIT CORPORATION			
			DRAW DATE 18-APR-94		FILE NO. 134826	MILL MADAWASKA, ME		MACH. NO. C-2		BELOIT LENOX DIVISION P.O. BOX 848 LENOX, MASSACHUSETTS, U.S.A. 01240			
			BUC	MAJOR	DEPT. NO. 063	DRAWN EVS	CHK'D. SJZ	APP'D.1	APP'D.2 GRC	HAND LH	TYPE SF	GRADE COATED	SPEED 7500	WIDTH 212
			BNC 94-9900		DATE 12-JAN-94	TITLE - LIST OF COMPONENTS BASEPLATE LC						IDENTIFICATION NUMBER LC-2773-94-0-0	

BEL-CAD

ITEMS NOT SHOWN

1206	SAFETY EQUIPMENT, SLITTER - SF VERT
1305	ROLL DRIVE ASSEMBLY
1701	LOAD CELL ARRANGEMENT: COMPTROL
1702	SPACERS, LOAD CELL
3005	ROLL DIAMETER SCALE
3006	SAFETY EQUIP, Sr WINDER
3103	BEARING ASSEMBLY
3104	PARKING BRAKE ASSEMBLY
3105	DRIVE SHAFTING & COUPLINGS
3203	BEARING ASSEMBLY
3303	PROX. SWITCH ASSEMBLY
3305	3" CHUCK (FIBER)
3306	4" CHUCK ADAPTER (FIBER)
3307	5" CHUCK ADAPTER (FIBER)
3308	6" CHUCK ADAPTER (FIBER)
3309	BARRIER, CORE SLIDE
3409	SAFETY LATCH ASSEMBLY (RH)
3410	SAFETY LATCH ASSEMBLY (LH)
3412	PIPING, ARTIC. RIDER ROLL
3413	PIPING, ACCUMULATOR (SHORT)
3414	PIPING, ACCUMULATOR (LONG)
3415	PIPING, SPECIAL - ACCUM. CHARGE
3416	SUPPLY PIPING, ARTIC. R.R.
3417	LEVEL SENSOR, SIGHT GAGE
3503	THREADING AIR ASSIST
4004	LIMIT SWITCH ARR., CRADLE
4005	SAFETY EQUIPMENT, CRADLE - DRUM MTD
4101	PIPING, CROSS MACHINE - QUICK TRIM
4103	PIPING, WINDER CROSS TIE
4104	PIPING, CORESLIDE CYLINDER
4105	PIPING ASSEMBLY, RIDER ROLL
4106	PIPING, CRADLE
4109	PIPING, EJECTOR
4110	SAFETY SIGNS, HYD UNIT - SF
4111	PIPING, SLITTER TOP & BOTTOM (INTER)

SHEET 1 OF 2

© 1992. BELOIT CORPORATION. THE INFORMATION ON THIS PRINT IS SUBMITTED IN CONFIDENCE AND MAY NOT BE COPIED.

REVISION	U OF M: IN	CLASS. OF CHAR.: CRITICAL	ORDER NO.: 8499	CUSTOMER NAME: FRASER PAPER, LTD					BELOIT CORPORATION
	DRWN DATE: 18-JUL-94		FILE NO.: 134828	MILL: MADAWASKA, ME			MACH. NO.: C-2		BELOIT LENOX DIVISION
	BUC	MAJOR	DEPT. NO.: 063	DRAWN: PBS	CHK'D.: SJZ	APP'D.1: SJZ	APP'D.2: MLT	SCALE: 1:10	REFERENCE DRAWING: LC-2773-50-4-0
	DNC: 50-9900		DATE: 16-JUN-94	TITLE: WINDER ARRANGEMENT DRAWING					IDENTIFICATION NUMBER: MA-2773-50-4-0

BELOIT-CADD® BASE 88

-LEGEND-

CIRCUIT	SHEET
WINDER HYDRAULIC UNIT	-1
(5) ROLL EJECTOR	-2
(6) CORE CHUCKS	-2
(12) CORE SLIDES	-2
(2) ON MACHINE CRADLE	-2
(4) RIDER ROLL	-3
(9) UNWIND SIDELAY/OSCILLATION	-4

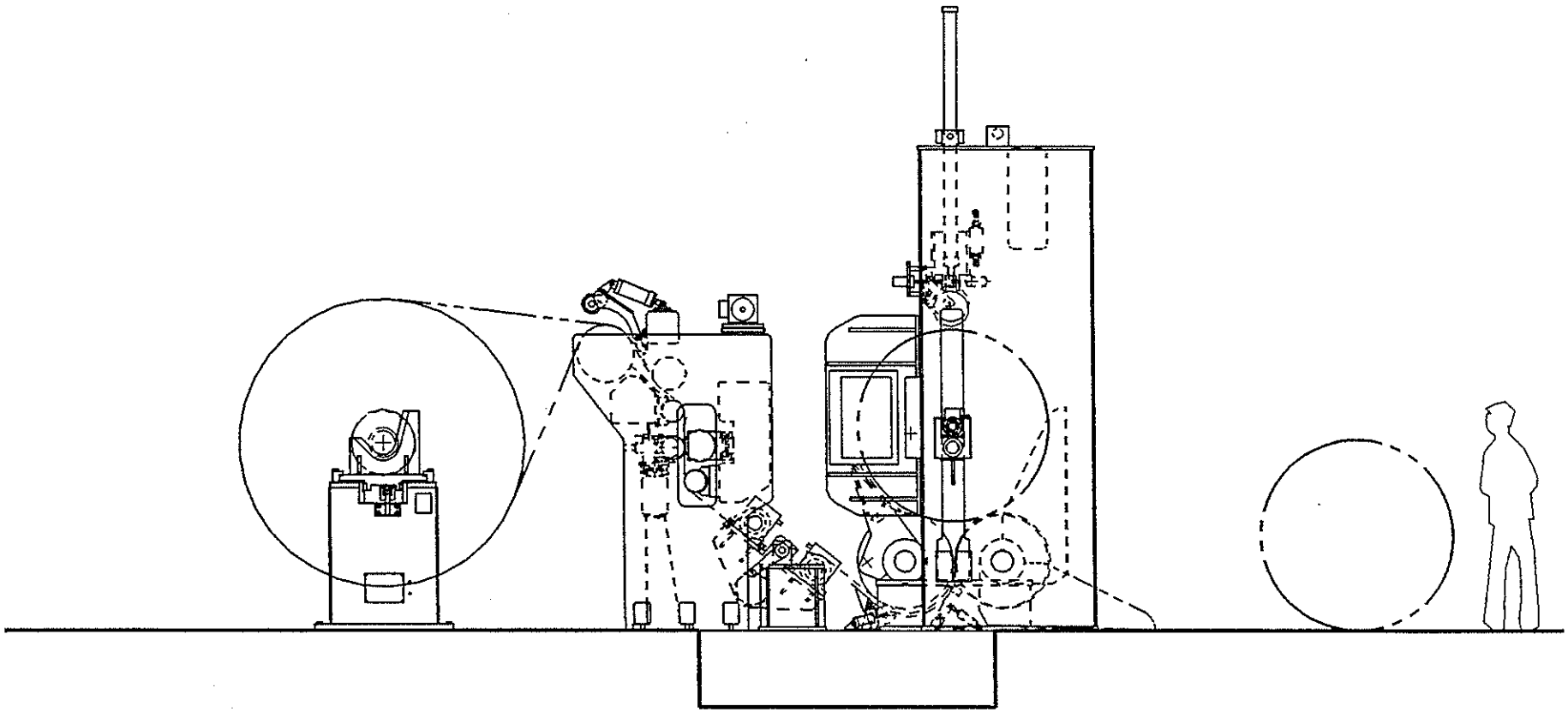

SHEET 1 OF 2

© 1992, BELOIT CORPORATION. THE INFORMATION ON THIS PRINT IS SUBMITTED IN CONFIDENCE AND MAY NOT BE COPIED.

REVISION	U OF M: IN	CLASS. OF CHAR.	ORDER NO. 8499	CUSTOMER NAME: FRASER PAPER LTD.	BELOIT CORPORATION — BELOIT LENOX DIVISION
	DRPA DATE: 25-APR-94	CRITICAL	FILE NO.	MILL: MADAWASKA, ME. — MACH. NO. C-2	
	BUC	MAJOR	DEPT. NO. 062	DRAWN DGH / CHK'D. DKH / APP'D.1 JTH / APP'D.2 RSK / SCALE N/A	REFERENCE DRAWING: LC-2773-91-1-0
	DWG 91-5020		DATE 12-JAN-94	TITLE: HYDRAULIC SCHEMATIC, WINDER	IDENTIFICATION NUMBER: 91-5020-0257-0

BSSC 88

BEL-C000 REV. 0 -1-10-6/04; 190-91-5020-0257-01

PRE-START-UP I[illegible]S:

1. CLEAN AND I[illegible] PUMP RESERVOIR BEFORE FILLING.
2. HYDRAULIC OIL [illegible] PETROLEUM BASE WITH RATED VISCOSITY OF 150 SSU AT 100 F AND 45 SSU AT 210 F. (REFERENCE MOBIL DTE 24)
3. FILL THE RESEAVOIR WITH OIL UNTIL THE LEVEL REACHES THE FULL MARK AT THE TOP OF THE GAUGE GLASS. DO NOT OVERFILL.
4. BE SURE THE PUMP CASE IS FILLED WITH OIL. REFER TO PUMP MANUAL FOR START-UP PROCEDURES.
5. MAKE SURE ALL SOLENOID VALVES ARE DE-ENERGIZED.

6. A. BACK-OFF FULLY COUNTERCLOCKWISE, THE FOLLOWING CONTROLS:
   B. THE SYSTEM PRESSURE RELIEF VALVE △A
   C. ALL PRESSURE REDUCING VALVES.
   D. ALL PRESSURE RELIEF VALVES.
   E. OPEN SHUTOFF VALVES △A FULLY CCW.
7. CLEAR PERSONNEL FROM UNIT AND WINDER AREAS.
8. A. CLOSE SHUTOFF VALVE (TURN CLOCKWISE) △A FOR NO FLOW.
   B. ADJUST PUMPS COMPENSATOR SCREWS △B FOR MAX PRESSURE (TURN CLOCKWISE).
   C. JOG THE MOTOR AND CHECK FOR THE PROPER ROTATION OF THE PUMP AS INDICATED BY THE DIRECTIONAL ARROW ON THE PUMP.
   D. WHILE WATCHING "SYSTEM" PRESSURE GAUGE, ADJUST PRESSURE RELIEF VALVES △A UNTIL PRESSURES REACH 2000 PSI (TURN CLOCKWISE).
   E. ADJUST PUMP COMPENSATOR SCREWS △B UNTIL PRESSURES REACH 1600 PSI (TURN COUNTERCLOCKWISE). INITIAL ADJUST ONLY. FINAL PRESSURE SETTING SHOULD BE A MINIMUM OF 200 PSI ABOVE ACTUAL PRESSURE REQUIREMENTS.
   F. OPEN SHUTOFF VALVE △A AS NEEDED TO FLUSH LINES (TURN COUNTERCLOCKWISE).
9. FLUSH EACH LINE FOR AT LEAST 15 MINUTES OR UNTIL CLEAN BEFORE CONNECTING TO AND FILLING CYLINDERS.

ENGINEERING REFERENCE

TYPE OF WINDER: SF

RESERVOIR SIZE: 120 U.S. GALLON

HYD. UNIT FLOW CAPACITY: 31 GPM

MAX. SYSTEM OPERATING PRESSURE: 1800 P.S.I. CONTINUOUS

HYDRAULIC UNIT TO BE INSTALLED WITH ALL FOUR SIDES ACCESSIBLE FOR SERVICING.

SAE---
-INDICATES PORT CONNECTION & SIZE.
THESE PORTS ON THE HYDRAULIC UNIT AND WINDER ARE FEMALE, STRAIGHT THREAD O-RING BOSS. PER SAE J514. UNLESS OTHERWISE SPECIFIED. PERMANENTLY MARK WITH IDENTIFICATION GIVEN.

SAE---
-INDICATES PORT CONNECTION & SIZE.
THESE PORTS ON THE HYDRAULIC UNIT AND WINDER ARE MALE, O-RING FACE SEAL, PER SAE J1453. UNLESS OTHERWISE SPECIFIED. PERMANENTLY MARK WITH IDENTIFICATION GIVEN.

NOTES:

1. STD. LINES ARE TO BE TUBING WHEREVER POSSIBLE. ALL WATER LINE PIPING TO BE SCHEDULE 40.
2. ALL TUBING 1/4" TO 3/4", TO HAVE A MINIMUM WORKING PRESSURE OF 3000 PSI WITH A MINIMUM SAFETY FACTOR OF 6. ALL TUBING 1" AND LARGER, TO HAVE A MINIMUM WORKING PRESSURE OF 2000 PSI WITH A MINIMUM SAFETY FACTOR OF 4.
3. **FOR OPERATIONAL RESPONSE, FIELD TUBING RUNS SHOULD NOT EXCEED 30 FEET AND CONTAIN AS FEW BENDS AS POSSIBLE. IF UNIT IS INSTALLED MORE THAN 50 FEET FROM CYLINDERS, INCREASE FIELD LINE RUNS BY ONE SIZE.**
4. LINE SIZES GIVEN ARE TUBING O.D., UNLESS OTHERWISE SPECIFIED.
5. ALL LINES USED MUST BE FREE OF RUST, SCALE, AND ANY OTHER IMPURITIES TO PREVENT SYSTEM CONTAMINATION. TEFLON TAPE MUST NOT BE USED AS A THREAD SEALER.

SET-UP INSTRUCTION FOR SETTING PRESSURE CONTROL VALVES OF INTEGRATED CORE SLIDES

WITH THE HYDRAULICS OFF AND THE CORE CHUCKS LOWERED - TURN COMPLETELY COUNTER CLOCKWISE ALL PRESSURE CONTROL VALVES. IE. RBAC LDN (C), PVDB LDN (P), RCP-400 (L) THIS IS THE ON MACHINE REMOTE OPTION.

1) TURN HYDRAULICS ON
2) TURN THE RBAC LDN (C) IN CLOCKWISE COMPLETELY (THE CORE SLIDE SHOULD NOT RAISE).
3) INCREASE PRESSURE SLOWLY BY TURNING THE ADJUSTMENT ON THE PVDB LDN (P) CLOCKWISE UNTIL THE CORE SLIDE RAISES. NOTE THE PRESSURE AND ADJUST IT TO APPROXIMATELY 30% ABOVE THE RAISE PRESSURE.
4) SLOWLY DECREASE THE PRESSURE IN THE SYSTEM BY TURNING THE RBAC LDN (C) COUNTER CLOCKWISEUNTIL THE CORE SLIDES BEGIN TO LOWER. INCREASE SLIGHTLY UNTIL THE CORE SLIDE STOPS LOWERING AND IMMEDIATELY BEFORE IT BEGINS TO RAISE AGAIN. THIS IS COUNTERBALANCE.
5) ADJUST THE FLOW CONTROLS AT THE WINDER MANIFOLD FOR RAISE SPEED AND THE FLOW CONTROLS ON EACH CYLINDER FOR LOWER SPEED.

IF THE SYSTEM HAS A REMOTE OPTION CONTINUE TO STEP 6, IF NOT THE SET-UP IS COMPLETE.

6) SLOWLY TURN IN THE RCP-400 (L) UNTIL THE CORE SLIDE RAISES. THIS PROCEDURE SIMPLY VERIFIES THAT THE REMOTE IS FUNCTIONAL. RETURN THE RCP-400 (L) TO IT'S COUNTER CLOCKWISE POSITION. WHEN INSTALLING HEAVIER CORE CHUCK ADAPTORS, THIS REMOTE IS USED TO COMPENSATE FOR THE ADDITIONAL WEIGHT OF ADAPTOR.

OSCILLATING UNWIND SET-UP INSTRUCTIONS

1. OPEN ITEMS △U, FLOW CONTROL VALVES, ONE TURN.
2. OPEN ITEMS △U, FLOW CONTROL VALVES, ONE TURN.
3. ADJUST ITEM △V, PRESSURE REDUCING VALVE, TO PRESSURE REQUIRED TO MOVE FULLY LOADED UNWIND SMOOTHLY IN BOTH DIRECTIONS. THE SIDELAY VALVE MUST BE ENERGIZED IN EXTEND AND RETRACT TO DO THIS.
4. ALTERNATELY ENERGIZE USB-SV AND USF-SV, ADJUST ITEMS △U, FLOW CONTROL VALVES, FOR DESIRED TRAVERSE SPEED, AX. 1" PER SECOND. (CLOCKWISE ADJUSTMENT WILL DECREASE SPEED)
5. ALTERNATELY ENERGIZE UOB-SV AND UOF-SV. ADJUST ITEMS △T, FLOW CONTROL VALVES. FOR DESIRED OSCILLATION SPEED, AX. 1" EVERY 10 SECONDS. (CLOCKWISE ADJUSTMENT WILL DECREASE SPEED)
6. LOCK ALL ADJUSTMENTS.

REVISION	SHEET 2 OF 2
	SYMBOL
	91-5020-0257-0

REV	ITEM	QUAN	DESCRIPTION	WIDTH	LENGTH	UOM	SYMBOL	MATERIAL	SPL INS
B	176	2	MOTOR, ELEC-AC-25 HP-1800 RPM-RELIANCE, 575VAC, 3 PHASE, TEFC, 284TC FRAME, C-FACE, FOOT MTD, XEX, SINGLE VOLTAGE			IN	293236-014		
	176A	2	BRACKET, PUMP/MOTOR-VESCOR #1381			IN	272912-005		
1	176B	2	COUPLING, HALF-MAGNALOY #400 1.25 BORE WITH .3125 KEYWAY			IN	238212-002		
1	176C	2	COUPLING, HALF-MAGNALOY #M40012816, BORE 1.875 WITH .5 KEYWAY			IN	238212-010		
	176D	4	PLATE, MTG.-284TC MOTOR SNF			IN	W14543S	STEEL	
1	176E	8	ISOLATOR, VIBRATION-KORFUND TYPE #R-2-GREEN, 380 LB LOAD			IN	248421-034	NEOPRENE	
	176F	2	INSERT, COUPLING-MAGNALOY #47ON			IN	238243-008		
	176G	8	WELD PLATE SNF			IN	W14060S		
	387C	REF	CARTRIDGE, RELIEF VALVE-SUN #ROFA-LAN			IN	268933-022	STEEL	
	482C	REF	CARTRIDGE, CHECK VALVE-SUN #CXHA-XBN			IN	268933-024	STEEL	
	481C	REF	CARTRIDGE, FLOW CONTROL VALVE-SUN #NFAB-XXV			IN	268933-025	STEEL	
	482C	REF	CARTRIDGE, NEEDLE VALVE SUN #NFFD-LIN			IN	268933-047	STEEL	
1	495	1	VALVE, BALL-APOLLO #70-106-01, 1.25 NPT			IN	266134-043	BRONZE	
1	498	2	VALVE, BALL-APOLLO #70-108-01, 2.0 NPT			IN	266134-042	BRONZE	
K	550	1	HEAT EXCHANGER, THERMAL TRANSFER #EKS-718-T-R, W/INTERNAL RELIEF			IN	276114-006		
	550A	3	ADAPTER, PIPE REDUCER EXPANDER MALE STR THD TO FEM STR THD-PARKER #24-12-FSOGS-S			IN	269135-217	ST	
	550W	2	WELD PLATE SNF			IN	W14642S	MS1020	
1	555	2	FILTER, HYDRAULIC-SPIN ON-PALL #HH7500A240NSBLL, 1.5 PORT SIZE, 6 MICRON, 200 PSI			IN	276747-021	GR IRON	
1	555A	2	FILTER ELEMENT, PALL #HC7500SKN8H			IN	276771-163		
1	601	1	VALVE, WATER MODULATING-THERMAL TRANSFER PRODUCTS #65293, .5 NPT			IN	268776-002		
	602P	1	MANIFOLD, POWER UNIT CONTROL-CUSTOM-FLUID POWER PRODUCTS #132-0120-05			IN	266843-073		
	800	REF	COVER PLATE-BLANK ALL PORTS-DAMAN #A-D08-CP-P			IN	268913-049	ALUMINUM	

POWER UNIT
ONE UNIT, OFF MACHINE)

1" TUBE
DRAIN LINE

1 1/4" TUBE
RIDER ROLL TANK LINE

1.0" TUBE
RIDER ROLL VENT LINE
CORE SLIDE VENT LINE
CRADLE VENT LINE

FROM WINDER HYDRAULIC MANIFOLD
BY MILL

PRESSURE FITER CHANGE

1. SHUT DOWN THE SYSTEM.
2. CLOSE VALVE 4A (CLOCKWISE).
3. OPEN VALVE 4A (COUNTER-CLOCKWISE).
4. REPLACE FILTER ELEMENT.
5. TURN ON THE PUMP AND ALLOW 2 MINUTES TO BLEED AIR FROM THE FILTER ELEMENT AND HOUSING.
6. GRADUALLY CLOSE VALVE 4A (CLOCKWISE).
7. GRADUALLY OPEN VALVE 4A (COUNTER-CLOCKWISE).
8. LOCK VALVE 4A WIDE OPEN.

REV	ITEM	QUAN	DESCRIPTION	WIDTH	LENGTH	UOM	SYMBOL	MATERIAL	SPL INS
	1	1	ADAPTER, BREATHER PALL #HC7500S038HB-KIT			IN	276697-001		
	2	1	PLUG, STRAIGHT THREAD-HOLLOW HEX-PARKER #16-HPSON-S			IN	257113-002	STEEL	
	3	2	UNION, PIPE MALE-STR THD BOTH ENDS-PARKER #24-FSOFO-S			IN	269117-009	ST	
	4	1	RESERVOIR/BASE PLATE SNF			IN	WF13173		
	5L	3	BRACKET, SAFETY SIGN SNF			IN	WSD-580025		
	7	2	ADAPTER, HOSE-MALE STRAIGHT THD-ZINGA #PV-1820, 1.875-12			IN	264275-003	STEEL	
	8	4	CLAMP, HOSE-DIXON #T8C256 T-BOLT TYPE, 2.5625			IN	264211-025	STST	
	9	1	HOSE, PARKER HANNIFIN #881-32 (SAE 100R4), 2.0 ID		120.0000	IN	182872-606	RUBBER	
	10	2	ADAPTER, FILTER-TANK-ZINGA #FT-200-ZP, 2.0 NPT			IN	278775-004		
	11	2	NIPPLE, PIPE CLOSE-STD PIPE-2.0 X 2.0			IN	253561-009	WS1025	
	12	1	HOSE, PARKER HANNIFIN #801-4, .25 HOSE ID		480.0000	IN	182851-604	RUBBER	
	13	2	CPLG, HOSE PUSH LOK-PARKER #30382-4-4, .25 HOSE ID			IN	264243-462	STEEL	
	14	6	CPLG, HOSE PUSH LOK-PARKER #30182-4-4, .25 HOSE ID			IN	264243-436	STEEL	
	15	4	ELBOW, PIPE STREET-90 DEG-NPTF-PARKER #.25 CO-S			IN	269155-009	ST	
	16	2	ADAPTER, PIPE FEM-STR THD TO FEM PIPE-PARKER #6-1/4FSOG-S, 9/16-18 X .25			IN	269135-101	STEEL	
	17	2	CLAMP, HOSE-DIXON #T8C188 T-BOLT TYPE, 1.875			IN	264211-023	STST	
	18	1	HOSE, PARKER HANNIFIN #881-20 (SAE 100R4), 1.25 ID		60.0000	IN	182872-601	RUBBER	
	19	1	ADAPTER, MALE 90 DEG NPT THD TO HOSE-FORMRITE #23916-20-24, 1.5 NPT TO 1.25 HOSE			IN	264243-119	STEEL	
	20	1	ADAPTER, MALE NPT TO HOSE FORMRITE #HI-2020, 1.25 NPT TO 1.25 HOSE			IN	264243-791	STEEL	
1	20L	1	SWITCH, LEVEL/TEMPERATURE-APCO #TL-008 P16-140 DEG F				284713-006		
	20P	1	SWITCH, PRESSURE-HERION #08-832-00, SPDT, 150-2300 PSI, FLANGE MTD			IN	284772-090	ALUM	
	21	2	CONNECTOR, TUBE MALE-TUBE TO MALE STR THD-PARKER FERULOK #20-FSBU-SS, 1.25 X 1.625			IN	257764-009	STST316	
	22	2	ADAPTER, PIPE REDUCER EXPANDER-MALE STR THD TO FEM STR THD-PARKER #20-16-FSOGS-S			IN	269135-209	STEEL	
A1	23	1	FRAME, VALVE STACK SNF			IN	WF13027-1		
	24	2	ELBOW, TUBE MALE-90 DEG-TUBE TO MALE PIPE-PARKER FERULOK #12-CSBU-SS, .75 X 1.0625			IN	257741-712	STST316	
1	25	1	STRAINER, SUMP-FLOW EZY #S-25-100-RV-3, 25 GPM, 3 PSI			IN	276821-020	IRON	
1	27	2	STRAINER, SUMP-FLOW EZY #S-50-100-RV-3, 50 GPM, 3 PSI			IN	276821-022	IRON	
	30	1	WIREWAY, OILITE-HOFFMAN #F-44T48HC, 4.0 X 4.0 X 48.0			IN	282841-031	STEEL	
	35	1	WELL, BULB-THERMAL TRANSFER #65141, .75 NPT			IN	288879-015		
1	54L	1	GAUGE, PRESSURE-PDI #CF-1P-210A, 0-3000 PSI, .25 NPT				297215-028		
1	84L	1	FILTER, HYDRAULIC-PALL #HH9850K20KNSBLT, 6 MICRON, 8.0 ELEMENT, 50 PSI BYPASS, ELECT SWITCH, 1.25 SAE PORTING, MANIFOLD MOUNT			IN	276747-035	CI	
1	84S	1	FILTER ELEMENT, PALL #HC9850FKN8H, 6 MICRON 8 IN LG			IN	276771-180		
1	90	1	STRAINER, Y-THERMAL TRANSFER #65295, W/ 50 MESH SCREEN, .5 NPT, 125 PSI			IN	276811-026	BRASS	
Z	127L	2	PUMP, PISTON-RIGHT HAND ROTATION-PARKER #PAVC65R2			IN	272411-005		
	136	1	PUMP, VIKING #HJ475 INTERNAL GEAR, 20 GPM, 1800 RPM, .875 DIA SHAFT			IN	272161-079		
	136A	1	NIPPLE, PIPE CLOSE-STD PIPE-1.25 X 1.625			IN	253561-007	WS1025	
	136B	1	BUSHING, PIPE HEX-NPTF-PARKER #1.5 X 1.0 PTR-S			IN	269133-008	ST	
	136C	1	ELBOW, TUBE MALE-90 DEG-TUBE TO MALE PIPE THD-PARKER SEAL -LOK #16CLO-S, 1.0 X 1.0			IN	259341-102	ST	
B	173	1	MOTOR, ELEC-AC-2 HP-1800 RPM-RELIANCE, 575VAC, 3 PHASE, TEFC, 145TC FRAME, C-FACE, FOOT MTD, XXES, SINGLE VOLTAGE			IN	293227-010		
1	173E	4	ISOLATOR, VIBRATION-KORFUND TYPE #R-1-BLUE			IN	248421-035	NEOPRENE	
	173F	2	PLATE, MTG.-145TC MOTOR SNF			IN	W14544S		
	173G	4	WELD PLATE SNF			IN	W14061S		

SHEET 1 OF 2

© 1992, BELOIT CORPORATION. THE INFORMATION ON THIS PRINT IS SUBMITTED IN CONFIDENCE AND MAY NOT BE COPIED.

REVISION	DATE	BY
B1	31-OCT-94	
A1	10-MAY-94	

U OF M: IN	CLASS. OF CHAR.: CRITICAL / MAJOR	ORDER NO.: 8499	CUSTOMER NAME: FRASER PAPER LTD.
DWG DATE: 25-APR-94		FILE NO.:	MILL: MADAWASKA, ME.
BUC			MACH. NO.: C-2
BNC: 91-5020			

DEPT. NO.	DRAWN	CHK'D.	APP'D.1	APP'D.2	SCALE
062	DGM	DKW	JTM	RSK	N/A

DATE: 12-JAN-94

TITLE: HYDRAULIC SCHEMATIC, WINDER

BELOIT CORPORATION
BELOIT LENOX DIVISION
P.O. BOX 846 LENOX, MASSACHUSETTS, U.S.A. 01240

REFERENCE DRAWING: LC-2773-91-1-0

IDENTIFICATION NUMBER: 91-5020-0257-1

B85C 88

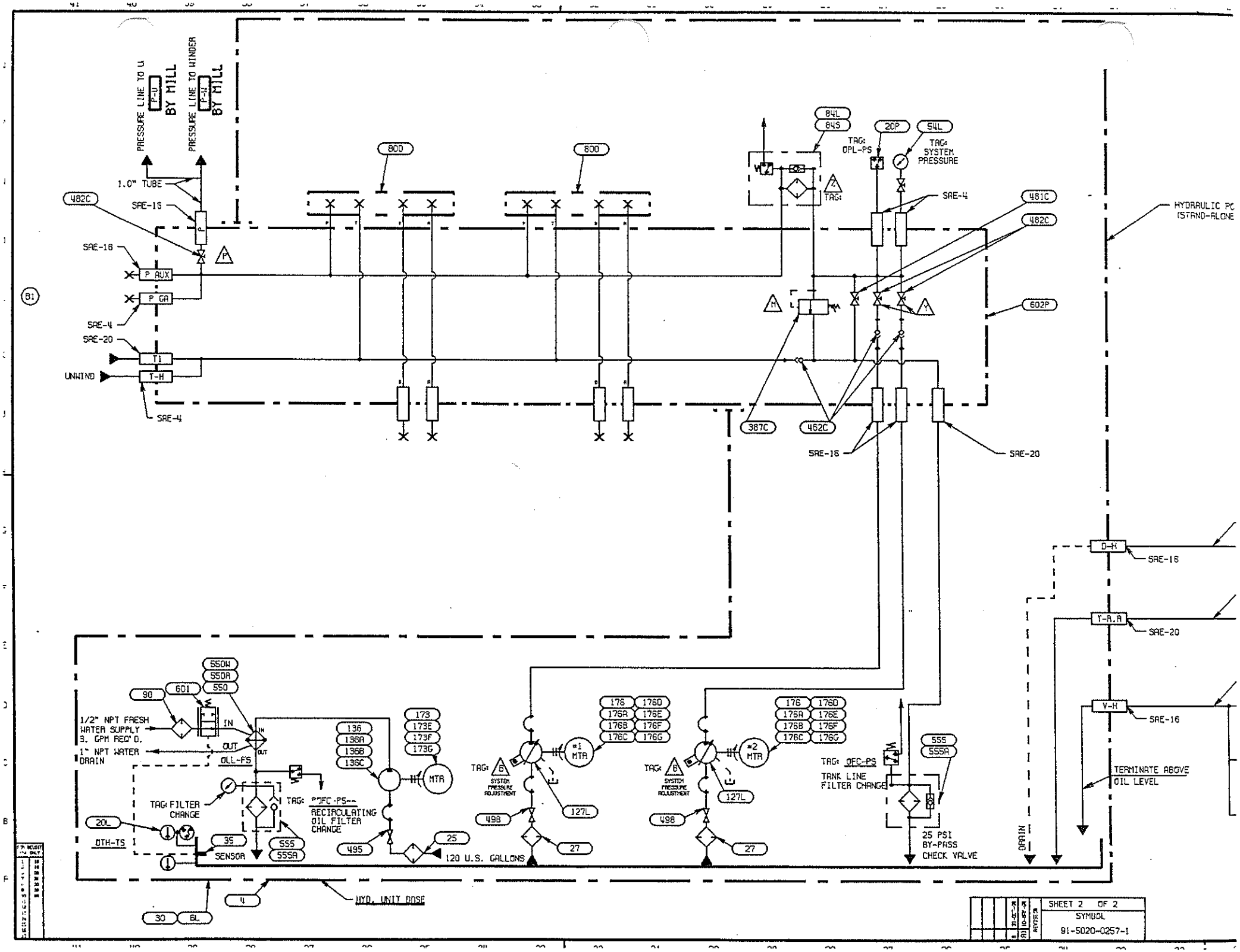
PRESSURE LINE TO U
P-U
BY MILL
PRESSURE LINE TO WINDER
P-W
BY MILL
1.0" TUBE
SAE-16
482C
SAE-16
P AUX
P GA
SAE-4
SAE-20
T1
UNWIND
T-H
SAE-4
800
800
84L
84S
20P
54L
TAG: OPL-PS
TAG: SYSTEM PRESSURE
SAE-4
481C
482C
602P
387C
462C
SAE-16
SAE-20
HYDRAULIC PC (STAND-ALONE
D-H
SAE-16
T-R.R
SAE-20
V-H
SAE-16
TERMINATE ABOVE OIL LEVEL
DRAIN
550W
550R
550
90
601
1/2" NPT FRESH WATER SUPPLY 3. GPM REQ'D.
IN
OUT
1" NPT WATER DRAIN
OLL-FS
TAG: FILTER CHANGE
TAG: PDFC-PS-- RECIRCULATING OIL FILTER CHANGE
20L
DTH-TS
35
SENSOR
555
555A
136
136A
136B
136C
173
173E
173F
173G
MTR
495
25
120 U.S. GALLONS
176
176D
176A
176E
176B
176F
176C
176G
#1 MTR
TAG: B SYSTEM PRESSURE ADJUSTMENT
127L
498
27
#2 MTR
TAG: B SYSTEM PRESSURE ADJUSTMENT
127L
498
27
TAG: DFC-PS
TANK LINE FILTER CHANGE
555
555A
25 PSI BY-PASS CHECK VALVE
DRAIN
HYD. UNIT DOSE
30
BL
4
B1
SHEET 2 OF 2
SYMBOL
91-5020-0257-1

SHT	ITEM	QUAN	DESCRIPTION	WIDTH	LENGTH	UM	SYMBOL	MATERIAL	SPL INS
	1	1	BRACKET, REMOTE MOUNT SNF			IN	3W128745-1		
1	52L	3	GAUGE,PRESSURE-PDI #CF-1P-140A, 0-2000 PSI. .25 NPT			IN	297215-027		
1	57	1	GAUGE,PRESSURE-PDI #CF-1P-070A, 0-1000 PSI. .25 NPT			IN	297215-033		
1	206L	1	VALVE,SOL-4 WAY-2 POSN-REXROTH #4WE6Y5X/AW120-60N9Z45 D03 PORT PATTERN			IN	267269-016		
1	208L	1	VALVE,SOL-4 WAY-2 POSN-REXROTH #4WE6C5X/OFAW120-60N9Z45 D03 PORT PATTERN. DETENTED			IN	267269-011	STEEL	
	257K	8	CAPSCR,SOC-.25-20 X 2.0			IN	214455-242	STSAEB	
1	264L	1	VALVE,SOL-4 WAY-3 POSN-REXROTH #4WE10E3X/CW110N9Z45. D05 PORT PATTERN			IN	267314-005	STEEL	
	301	REF	VALVE,FLOW CONTROL-RESTRICTOR-SUN #NCFB LAN. T-16A CARTRIDGE			IN	267835-052		
	302	REF	VALVE,FLOW CONTROL-RESTRICTOR-SUN #NCCB LAN. CARTRIDGE			IN	267835-094		
	305	REF	CARTRIDGE,FLOW CONTROL VALVE-SUN #NFEC-LEN			IN	268939-021	STEEL	
	330	2	MANIFOLD,CYLINDER MTD-FLUID POWER PRODUCTS #132-0116-03, METER OUT W/CHECK			IN	266843-074	ALUM	
	351	REF	CARTRIDGE,REDUCING VALVE-SUN #PVDB-LON			IN	268933-020	STEEL	
	355B	2	VALVE BODY,FLUID POWER SYSTEMS #132-0101-03. PILOT OPERATED CHECK AND PRESSURE REDUCING FUNCTIONS INCORPORATED INTO ONE BODY			IN	268935-017		
1	355L	REF	VALVE,PRESSURE REDUCING-SUN #PPDB LON. CARTRIDGE			IN	268677-054		
1	382M	2	VALVE,RELIEF-PARKER #RCP-400-S-M. .25 NPT			IN	268685-032	STEEL	
	382N	2	MOUNTING KIT,VALVE-PARKER #MVK-6			IN	268919-006		
1	395	1	VALVE,SOL-DBL-4 WAY-3 POSN-REXROTH #4WE10Q3X/CW110N9Z45, D05 PORT PATTERN			IN	267715-001	STEEL	
	399	REF	VALVE,SOL-2 WAY-2 POSN-SUN #DAGAA-MHN-2-11. CARTRIDGE TYPE			IN	266478-005		
	400	REF	CARTRIDGE,RELIEF VALVE-SUN #RBBC-LON			IN	268688-050		
	455	REF	CARTRIDGE,CHECK VALVE-SUN #CXCD-XCN. 5000 PSI. 30 PSI SPRING. BUNA N SEALS			IN	268933-019	STEEL	
1	457L	REF	VALVE,CHECK-SUN #CKCV XCN. CARTRIDGE			IN	268364-024		
	460N	2	MANIFOLD,VALVE-CYL MOUNTED FOR P.O. CHECKS & FLOW CONTROL CUSTOM BODY-FLUID POWER PRODUCTS #9203-216-003			IN	266843-069		
	461C	2	VALVE,CHECK-SUN #CKGV XCN CARTRIDGE			IN	268364-027		
	461F	2	VALVE,FLOW CONTROL-PRES COMP-SUN #FXFA-LAV-9 GPM FACTORY SET			IN	267835-111		
	461K	4	CAPSCR,SOC-.3125-18 X 5.0			IN	214455-304	STSAEB	
1	483	1	VALVE,NEEDLE-PARKER #MV-400-S. .25 NPT			IN	265568-009	STEEL	
	484S	REF	SNUBBER,VALVE GAUGE-SUN #NSAB-KXV-AS			IN	267842-004	STST	
	539	REF	PLUG,SUN #XGCA XXN FOR CAVITY T-13A			IN	268927-017		
	539P	REF	PLUG,SUN #XIDA XXN FOR CAVITY T-16A			IN	268927-018		
	604	1	MANIFOLD,WINDER HYDRAULIC FLUID POWER PRODUCTS #132-0114-05			IN	266843-072	ALUM	
	674K	8	CAPSCR,SOC-#10-24 X 2.0			IN	214455-212	STSAEB	
	681	9	PLUG,VALVE AND ENCAPSULATED CABLE 5 METERS LONG, SURGE SUPPRESSOR, LED INDICATOR, 110 VAC. NORSTAT #MSUD-24989			IN	268934-012		

SHEET 1 OF 3

© 1992, BELOIT CORPORATION. THE INFORMATION ON THIS PRINT IS SUBMITTED IN CONFIDENCE AND MAY NOT BE COPIED.

REVISION A1 31-OCT-94	U OF M IN	CLASS. OF CHAR.	ORDER NO. 8499	CUSTOMER NAME FRASER PAPER LTD.			BELOIT CORPORATION BELOIT LENOX DIVISION P.O. BOX 998 LENOX, MASSACHUSETTS U.S.A. 01240
	DRWN DATE 25-APR-94	CRITICAL	FILE NO.	MILL MADAWASKA, ME.	MACH. NO. C-2		
	DWG	MAJOR	DEPT. NO. 062	DRAWN DGM / CHK'D. DKW / APP'D.1 JTM / APP'D.2 RSK / SCALE N/A			REFERENCE DRAWING LC-2773-91-1-0
	BNC 91-5020		DATE 12-JAN-94	TITLE HYDRAULIC SCHEMATIC, WINDER			IDENTIFICATION NUMBER 91-5020-0257-2

BEL-CADD 88SC 88

(2) ON-MACHINE-CRADLE LOWERING CIRCUIT

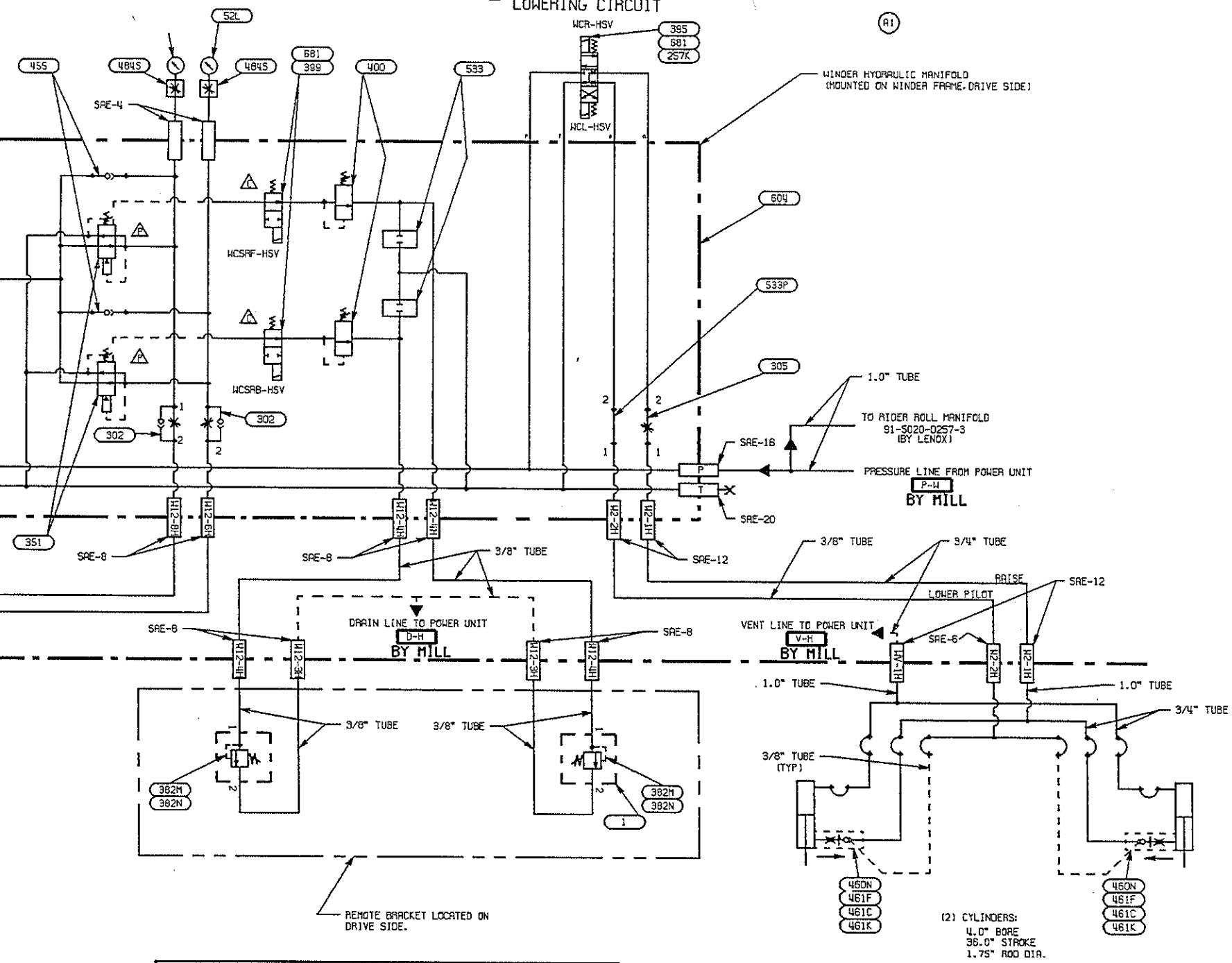

AS SHOWN FOR RIGHT HAND MACHINE

ENG. REF: THIS IS A LEFT HAND MACHINE.

				A1	91-OCT-94 REVISION

SHEET 2 OF 3

SYMBOL

91-5020-0257-2

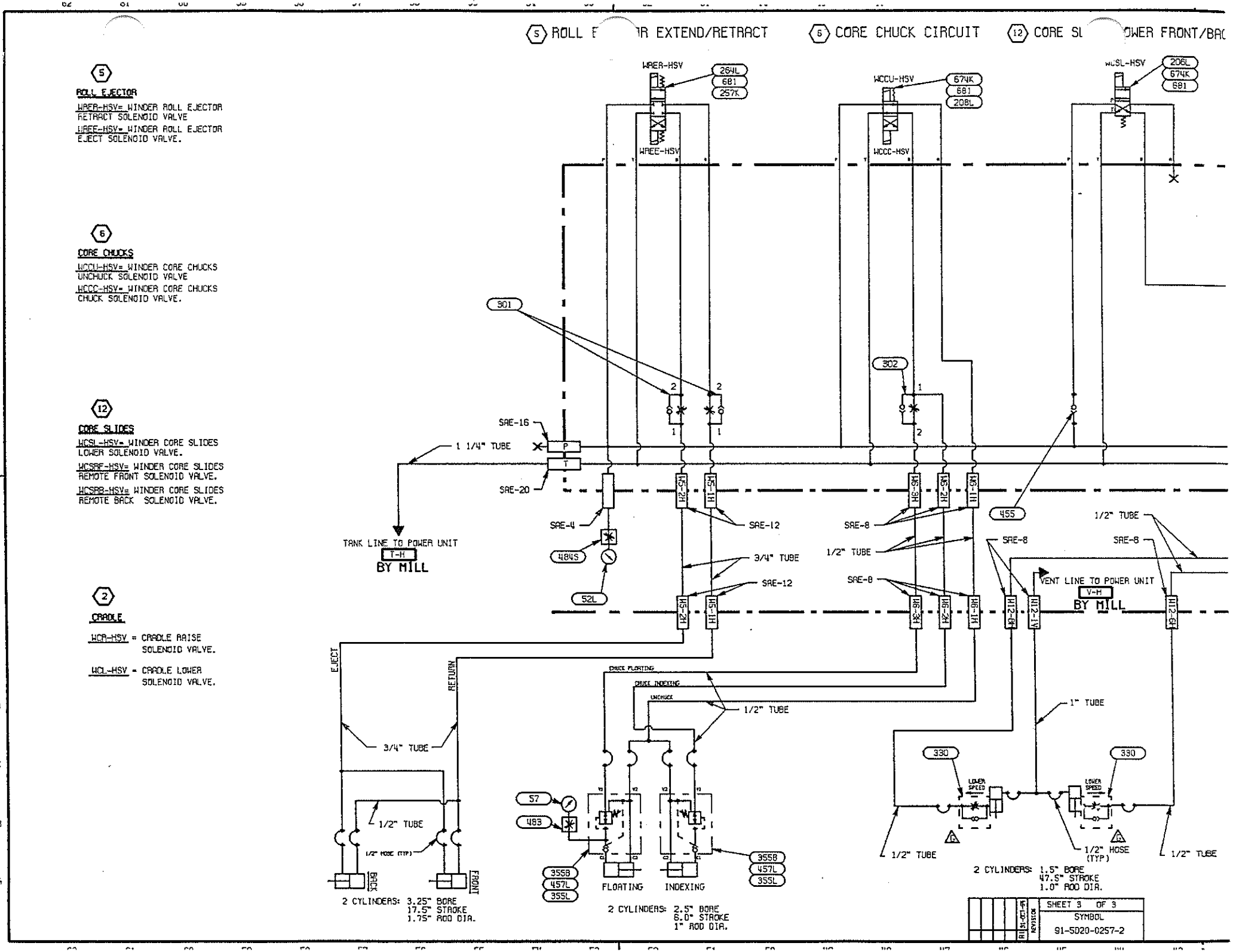
5 ROLL E R EXTEND/RETRACT
6 CORE CHUCK CIRCUIT
12 CORE SL OWER FRONT/BAC
5
ROLL EJECTOR
WAER-HSV= WINDER ROLL EJECTOR RETRACT SOLENOID VALVE
WAEE-HSV= WINDER ROLL EJECTOR EJECT SOLENOID VALVE.
6
CORE CHUCKS
WCCU-HSV= WINDER CORE CHUCKS UNCHUCK SOLENOID VALVE
WCCC-HSV= WINDER CORE CHUCKS CHUCK SOLENOID VALVE.
12
CORE SLIDES
WCSL-HSV= WINDER CORE SLIDES LOWER SOLENOID VALVE.
WCSRF-HSV= WINDER CORE SLIDES REMOTE FRONT SOLENOID VALVE.
WCSRB-HSV= WINDER CORE SLIDES REMOTE BACK SOLENOID VALVE.
2
CRADLE
WCR-HSV = CRADLE RAISE SOLENOID VALVE.
WCL-HSV = CRADLE LOWER SOLENOID VALVE.
WAER-HSV
264L
681
257K
WAEE-HSV
WCCU-HSV
674K
681
208L
WCCC-HSV
WCSL-HSV
206L
674K
681
301
302
455
SAE-16
1 1/4" TUBE
SAE-20
SAE-4
484S
52L
TANK LINE TO POWER UNIT
T-H
BY MILL
SAE-12
3/4" TUBE
SAE-12
SAE-8
1/2" TUBE
SAE-8
SAE-8
1/2" TUBE
SAE-8
VENT LINE TO POWER UNIT
V-H
BY MILL
EJECT
RETURN
3/4" TUBE
CHUCK FLOATING
CHUCK INDEXING
UNCHUCK
1/2" TUBE
1" TUBE
330
330
LOWER SPEED
LOWER SPEED
1/2" TUBE
1/2" HOSE (TYP)
1/2" TUBE
57
483
3558
457L
355L
3558
457L
355L
FLOATING
INDEXING
BACK
FRONT
2 CYLINDERS: 3.25" BORE
17.5" STROKE
1.75" ROD DIA.
2 CYLINDERS: 2.5" BORE
6.0" STROKE
1" ROD DIA.
2 CYLINDERS: 1.5" BORE
47.5" STROKE
1.0" ROD DIA.
SHEET 3 OF 3
SYMBOL
91-5D20-0257-2

CALCULATING RIDER ROLL WEIGHT AND DETERMINING PSI PER PLI

. MUST KNOW RIDER ROLL HYDRAULIC CYLINDER BORE AND ROD DIAMETER.
EXAMPLE: CYL BORE = 4.0" & ROD DIA = 2.0" .

2. CALCULATE EFFECTIVE CYLINDER AREA (ECA):

ECA = 2 * [(PI*B^2/4)-(PI*RD^2/4)]

B = CYLINDER BORE
RD = ROD DIAMETER

EXAMPLE: 4" CYL BORE AND 2" ROD

ECA = 2 * [(PI*(4^2)/4)-(PI*(2^2)/4)] = 18.85 IN^2

NOTE: IF THE CYLINDER ARRANGEMENT HAS A 2:1 FORCE ADVANTAGE THRU A PULLEY/CHAIN SYSTEM, CORRECT THE CALCULATIONS BY ASSUMING THAT ONE CYLINDER DOES ALL THE WORK.

3. LOWER THE RIDER ROLL ON TO DRUMS (OR CORES) AND PUSH LOAD BUTTON (LOAD THE RIDER ROLL). DISCONNECT AIR LINE FROM AIR PORT OF AIR/OIL BELOIT SERVO-VALVE. TURN ADJUSTING SCREW C.W. ON VALVE HEAD UNTIL RIDER ROLL JUST BEGINS TO CREEP UP. AFTER SLIGHT MOTION BECOMES EVIDENT BACK OUT SCREW UNTIL ROLL STOPS. READ PRESSURE ON GAGE LOCATED BETWEEN VALVE AND RIDER ROLL CYLINDERS. THE READ PRESSURE IS COUNTER BALANCE OR ZERO LOAD PRESSURE.

4. **TAKE THE CB PRESSURE DETERMINED ABOVE AND MULTIPLY IT BY ECA FROM #2. THE RESULT IS RIDER ROLL WEIGHT.**

EXAMPLE: CB = 820 PSI; 820 * 18.85 = 15.457 LBS

5. TO DERTIMINE PSI PER PLI, THE HYDRAULIC PRESSURE FOR RIDER ROLL MAXIMUM LOAD MUST BE DETERMINED FIRST.

MLP = (RRW - MXL) / ECA

MLP = MAX LOAD PRESSURE
RRW = RIDER ROLL WEIGHT (STEP #4)
ECA = EFFECTIVE CYLINDER AREA
MXL = MAX LOAD
= TW * MXPLI
TW = TRIM WIDTH
MXPLI = MAX PLI LOAD FOR RIDER ROLL

EXAMPLE: RRW = 15.457 , MXPLI = 10, TW = 300, ECA = 18.85

MLP = (15.457 - (300*10))/18.85 = 661 PSI

6. TO DETERMINE PSI PER PLI DIVIDE THE TRIM WIDTH BY THE ECA.

PSI PER PLI = TW / ECA

EXAMPLE: 300 / 18.85 = 15.9 PSI/PLI

7. **THEREFORE THE RANGE OF RIDER ROLL LOADING WILL BE 804 PSI (820 - 15.9 PSI OR ONE PLI LOAD MINIMUM) DOWN TO 159 PSI (820-661) OR 10 PLI.**

RIDER ROLL SYSTEM CALIBRATION FOR SYSTEMS WITH AIR/OIL "SERVO-VALVE"

TOOLS: 1. MULTIMETER WITH MILLIAMP SCALE
2. SMALL FLAT BLADE SCREW DRIVER
3. LARGE FLAT BLADE SCREW DRIVER
4. 8" CRESENT WRENCH
5. 4-20 MA CURRENT SOURCE (OPTIONAL)

1. LOWER RIDER ROLL DOWN ONTO CORES IN DRUM POCKET AND LOAD IT (P.O. CHECK AND WRAX-SV MUST BE FIRED, DO NOT FIRE RAISE OR LOWER COILS).

2. DISCONNECT AIR LINE FROM AIR PORT OF "SERVO-VALVE".

3. TURN ADJUSTING SCREW ON BELOIT VALVE IN (TO INCREASE OIL PRESSURE) UNTIL RIDER ROLL JUST STARTS TO CREEP UPWARD. THEN BACK OFF SCREW SLIGHTLY TO STOP UPWARD MOTION. NOW BACK OFF SCREW TO SUBTRACT PRESSURE EQUAL TO 1 PLI (SEE CALCULATING RIDER ROLL WEIGHT AND PSI PER PLI IF VALUE IS UNKNOWN). EXAMPLE: IF PSI PER PLI WERE 16 THEN REDUCE "SERVO-VALVE" OUTPUT BY 16 PSI. RECONNECT AIR LINE TO VALVE.

4. SET RATIO RELAY CONSTANT SUPPLY REGULATOR AT 20 PSI AND LOCK ADJUSTMENT. SET MAX LOADING REGULATOR AT 50 PSI INITIALLY, WHEN FINAL VALUE OF MAX AIR LOADING IS DETERMINED SET MAX REGULATOR AT LEAST 5 PSI HIGHER AND LOCK ADJUSTMENT.

5. APPLY A 4 MA SIGNAL TO I TO P OF RATIO RELAY. EITHER VIA PLC ANALOG OUTPUT OR INDEPENDENT CURRENT SOURCE. ADJUST NEG BIAS SCREW (OPOSITE MANUAL ADJUST KNOB, USE ALAN WRENCH) FOR 0 PSI OUT. PUT OUTPUT OF RATIO RELAY INTO WATER AND WATCH FOR BUBBLES TO VERIFY 0 AIR SIGNAL (NOTE: START WITH RATIO ADJUSTMENT AT 1:1).

6. WITH 20 MA SIGNAL APPLIED TO I TO P OF RATIO RELAY, USE MANUAL ADJUST HANDLE TO CHANGE RATIO UNTIL AIR PRESSURE OUT GIVES CORRECT OIL PRESSURE FOR MAX RIDER ROLL LOAD. EXAMPLE: IF 660 PSI = 10 PLI (MAX LOAD) THEN ADJUST RATIO RELAY TO DELIVER 660 PSI OUTPUT FROM THE SERVO-VALVE.

7. REAPPLY 4 MA SIGNAL TO RATIO RELAY I TO P AND RECHECK FOR ZERO AIR PRESSURE OUT. IF ZERO OUT, GO TO STEP #8. IF NOT REPEAT STEPS #5 THRU 7.

8. APPLY SIGNALS OF 4, 8, 12, 16 AND 20 MA TO I TO P AND CHECK HYDRAULIC PRESSURE AND PLI READOUT FOR EACH SIGNAL LEVEL. REPEAT PROCEDURE SEVERAL TIMES TO VERIFY LINEARITY AND REPEATABILITY OF SYSTEM.

REV	ITEM	QUAN	DESCRIPTION	WIDTH	LENGTH	UF	SYM	MATERIAL	SPL INS
	53L	1	GAUGE, PRESSURE-PDI *CF-1P-140A, 0-2000 PSI, .25 NPT			IN	297215-02		
	263K	6	CAPSCR, SOC-.5-13 X 2.5			IN	214455-444	STSAE8	
	263L	1	VALVE, SOL-4 WAY-3 POSN-REXROTH *WEH22ET7X/6AW120-60N9ETS2Z45 D08 PORT PATTERN			IN	267314-004	STEEL	
	280	REF	VALVE, SOL-3 WAY-2 POSN-SUN *DBAA-MCN-2-11, CARTRIDGE TYPE			IN	266544-001		
	303A	REF	VALVE, FLOW CONTROL-RESTRICTOR-SUN *NCGC-LCN, T-18A CARTRIDGE			IN	267835-103		
	426	REF	VALVE, LOGIC ELEMENT-SUN *LKFC-XON, N/C, PILOT OPERATED			IN	267884-011		
	460N	2	MANIFOLD, VALVE-CYL MOUNTED FOR P.O. CHECKS & FLOW CONTROL CUSTOM BODY-FLUID POWER PRODUCTS *9203-216-003			IN	266843-069		
	461C	2	VALVE, CHECK-SUN *CKGV XCN CARTRIDGE			IN	268364-027		
C1	461F	2	VALVE, FLOW CONTROL-PRES COMP-SUN *FXFA-LAV-06 GPM FACTORY SET			IN	267835-089		
	461K	4	CAPSCR, SOC-.3125-18 X 5.0			IN	214455-304	STSAE8	
	484	REF	SNUBBER, VALVE GAUGE-SUN *NSAB-KXV-AS			IN	267842-004	STST	
	540	1	HYDRAULIC SERVO VALVE SNF			IN	91-5026-0026		
	540N	1	VALVE, FIXED FLOW ORIFICE-O'KEEFE CONTROLS *E-20, .25 NPT MALE, .020 ORIFICE			IN	266821-002	BRASS	
	540T	1	TEE, PIPE STREET-NPTF-PARKER *.25-MRO-S			IN	269171-005	ST	
	560	1	MUFFLER, EXHAUST-PARKER *EM-25, .25 NPT			IN	276651-013	BRASS	
	629	1	MANIFOLD, RIDER ROLL CONT-FLUID POWER PRODUCTS *132-0108-0*			IN	266843-070	ALUM	
	629K	6	CAPSCR, SOC-.5-13 X 5.0			IN	214455-454	STSAE8	
	681	4	PLUG, VALVE AND ENCAPSULATED CABLE 5 METERS LONG, SURGE SUPPRESSOR, LED INDICATOR, 110 VAC, NORSTAT *MSUD-24989			IN	268934-012		
	701	1	TRANSMITTER, PRESSURE-VIATRAN *318-S-BF-2-CH-A20, (SPECIAL RANGE 0-2000 PSIG)			IN	298228-027		
	701B	1	CONNECTOR, ELECT-VIATRAN TRANSDUCER *230005.001			IN	298913-016		

SHEET 1 OF 2

© 1992, BELOIT CORPORATION. THE INFORMATION ON THIS PRINT IS SUBMITTED IN CONFIDENCE AND MAY NOT BE COPIED.

REVISION			
C1	20-DEC-94		
D	31-OCT-94		
B2	10-MAY-94		

U OF M: IN
DRAW DATE: 25-APR-94
DUC
BNC: 91-5020
CLASS. OF CHAR.: CRITICAL
MLOM
ORDER NO.: 8499
FILE NO.
CUSTOMER NAME: FRASER PAPER LTD.
MILL: MADAWASKA, ME.
MACH. NO.: C-2
DEPT. NO.: 062
DRAWN: DGM
CHK'D.: DKW
APP'D.1: JTM
APP'D.2: RSK
SCALE: N/A
DATE: 12-JAN-94
TITLE: HYDRAULIC SCHEMATIC, WINDER

BELOIT CORPORATION
BELOIT LENOX DIVISION
P.O. BOX 848 LENOX, MASSACHUSETTS U.S.A. 01240

REFERENCE DRAWING: LC-2773-91-1-0
IDENTIFICATION NUMBER: 91-5020-0257-3

88SC 88

④ RIDER ROLL RAISE/LOWER

RIDER ROLL

WRRX-HSV=RIDER ROLL LOAD SOLENOID VALVE.

WRRL-HSV=RIDER ROLL LOWER SOLENOID VALVE.

WRRR-HSV=RIDER ROLL RAISE SOLENOID VALVE.

WRRCV-HSV=RIDER ROLL CHECK VALVE PILOT SOLENOID VALVE

WRRP=RIDER ROLL PILOT

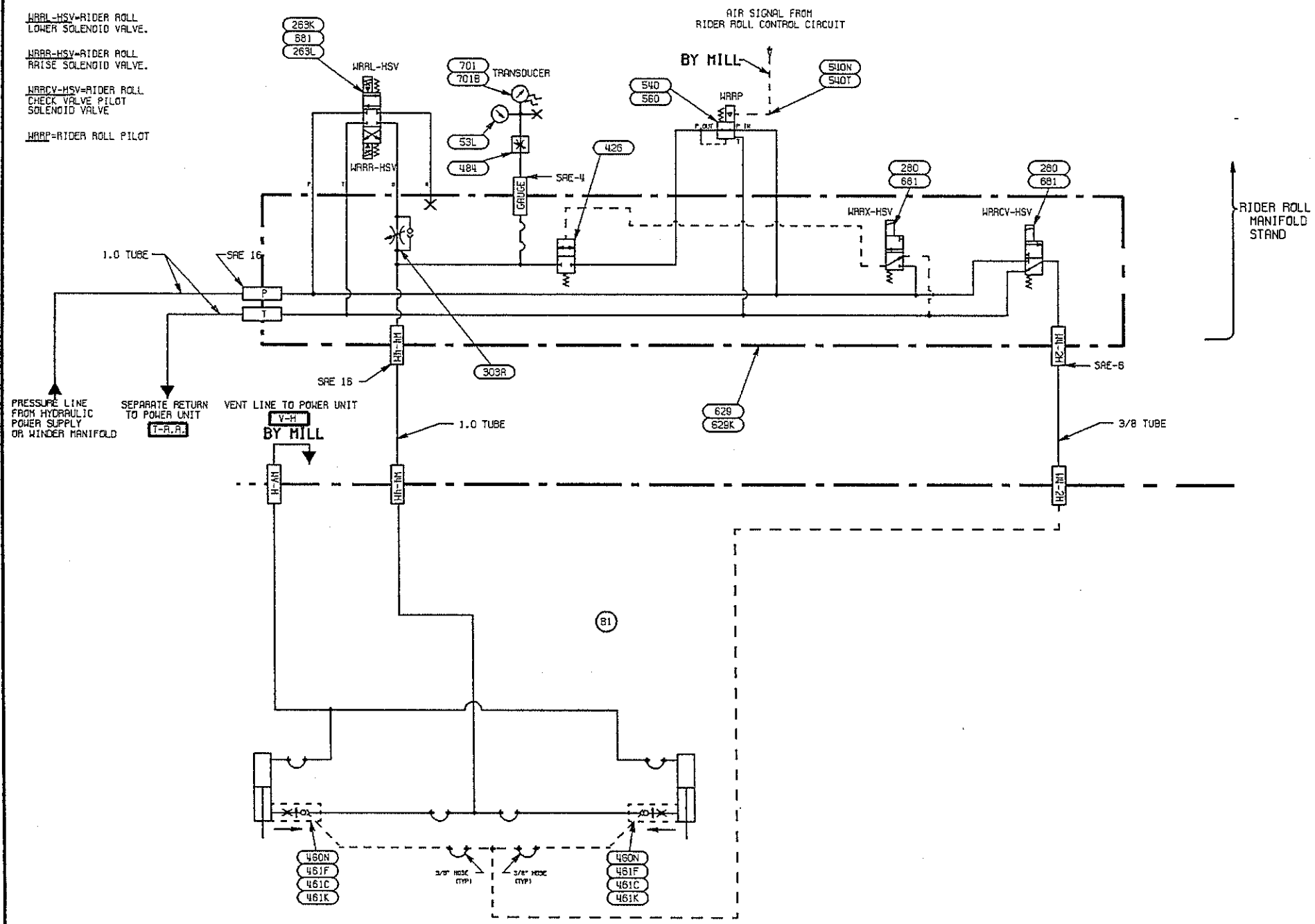

(2) CYLINDERS: 2.5" BORE
60.0" STROKE
1.375" ROD DIA.

C1	26-JUL-94		SHEET 2 OF 2	
B1	5-OCT-94		SYMBOL	
A2	10-OCT-94	REVISION	91-5020-0257-3	

SYM	ITEM	QUAN	DESCRIPTION	WIDTH	LENGTH	UM	SYMBOL	MATERIAL	SPL INS
	10	1	PLUG.STRAIGHT THREAD-HOLLOW HEX-PARKER #8-HP50N-S			IN	257113-C	STEEL	
	15	1	ADAPTER.PIPE FEM-STR THD TO FEM PIPE-PARKER #8-1/2F50G-S. 3/4-16 X .5			IN	269135-1L	STEEL	
	15A	1	BUSHING.PIPE HEX-NPTF-PARKER #.5 X .25 PTR-SS			IN	269233-005	STST	
1	52L	1	GAUGE.PRESSURE-PDI #CF-1P-210A. 0-3000 PSI. .25 NPT			IN	297215-028		
	253K	2	BOLT KIT.SUN #992002			IN	268915-031		
1	259L	2	VALVE.SOL-4 WAY-3 POSN-REXROTH #4WE10Q3X/CW110N9Z4S D05 PORT PATTERN			IN	267314-008	STEEL	
1	300	2	VALVE.FLOW CONTROL-PRES COMP-SUN #FDCB LAN OBY. D02 SANDWICH			IN	267835-095		
1	444	2	VALVE.CHECK-SUN #CKEB XAN BBY D02 SANDWICH			IN	268364-083		
1	483	1	VALVE.NEEDLE-PARKER #MV-400-S. .25 NPT			IN	265568-009	STEEL	
	630	1	MANIFOLD.INLINE BAR-PHD INC. #1-1223-03-1. 3 STATION			IN	268843-054		
	681	4	PLUG.VALVE AND ENCAPSULATED CABLE 5 METERS LONG. SURGE SUPPRESSOR. LED INDICATOR. 110 VAC. NORSTAT #MSUD-24969			IN	268934-012		
	800	1	COVER PLATE.BLANK ALL PORTS-DAMAN #A-D05-CP-P			IN	268913-048	ALUMINUM	

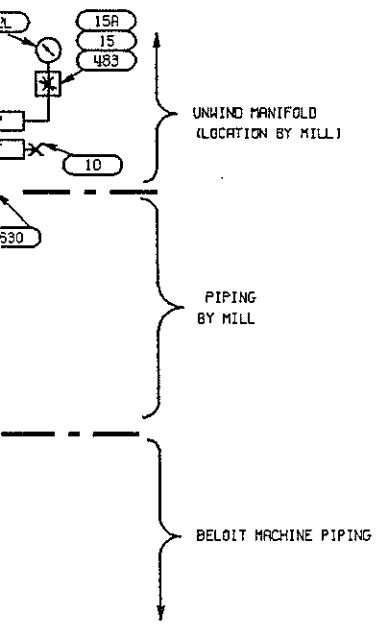

SHEET 1 OF 2

© 1992. BELOIT CORPORATION. THE INFORMATION ON THIS PRINT IS SUBMITTED IN CONFIDENCE AND MAY NOT BE COPIED.

A1 31-OCT-94 REVISION	U OF M IN	CLASS. OF CHAR.	ORDER NO. 8499	CUSTOMER NAME FRASER PAPER LTD.			BELOIT CORPORATION	
	DRPA DATE 25-APR-94	CRITICAL	FILE NO.	MILL MADAWASKA, ME.		MACH. NO. C-2	BELOIT LENOX DIVISION P.O. BOX 848 LENOX, MASSACHUSETTS U.S.A. 01240	
	DUC	MAJOR	DEPT.NO. 062	DRAWN DGM	CHK'D. DKW	APP'D.1 JTM	APP'D.2 ASK	SCALE N/A
	BNC 91-5020		DATE 12-JAN-94	TITLE HYDRAULIC SCHEMATIC, WINDER			REFERENCE DRAWING LC-2773-91-1-0	IDENTIFICATION NUMBER 91-5020-0257-4

B8SC B2

9 UNWIND SIDELAY/OSCILLATION

9

UNWIND OSCILLATION/SIDELAY

UOB-HSV = UNWIND
OSCILLATE BACK
HYDRAULIC SOLENOID VALVE

UOF-HSV = UNWIND
OSCILLATE FRONT
HYDRAULIC SOLENOID VALVE

USB-HSV = UNWIND
SIDELAY BACK
HYDRAULIC SOLENOID VALVE

USF-HSV = UNWIND
SIDELAY FRONT
HYDRAULIC SOLENOID VALVE

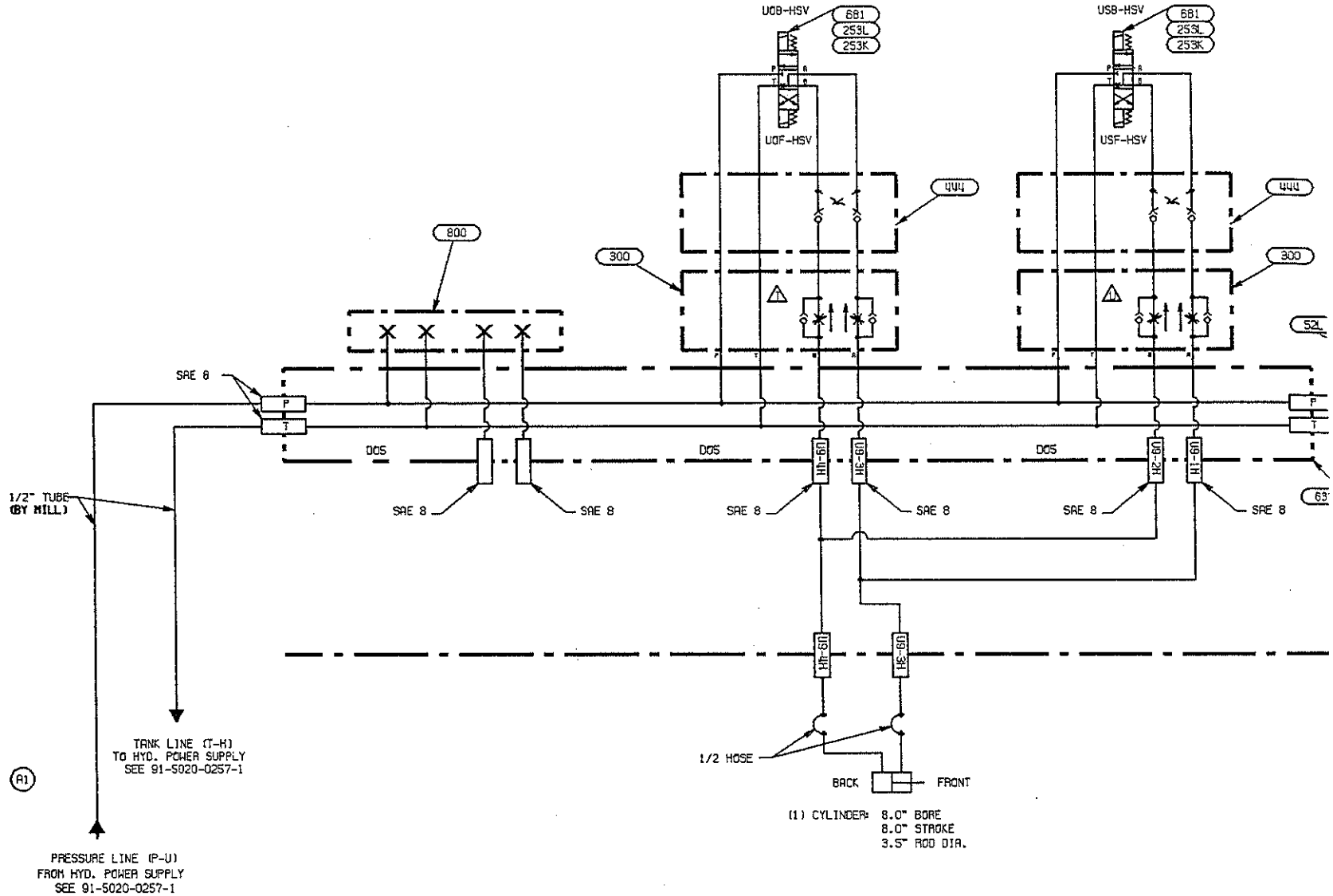

			A1	91-021-4A REVISION

SHEET 2 OF 2
SYMBOL
91-5020-0257-4

PNEUMAT[illegible] [illegible]MATIC NOTES:

1. ALL CON[illegible] DEVICES ARE SHOWN IN THE "STATIC" OR "OFF" POSITION.
2. REFER TO THE MACHINE ASSEMBLY DRAWING FOR THE ACTUAL LOCATION OF THE CONTROLLED EQUIPMENT.
3. ALL AIR LINES INSIDE ENCLOSURE TO BE 3/8 O.D. TUBE AND ALL AIR LINES OUTSIDE ENCLOSURE TO BE 1/2 O.D. TUBE OR 3/8 PIPE UNLESS OTHERWISE SPECIFIED. AIR LINES TO GAUGES TO BE 1/4 O.D. TUBE. (LINE SIZES GIVEN ARE MINIMUM.) ALL PILOT LINES (SHOWN-----) SHOULD BE 1/4 O.D. TUBE.
4. ALL PIPING, SHUT-OFF VALVES, HOSE AND QUICK DISCONNECTS TO BE SUPPLIED UNLESS OTHERWISE SPECIFIED.
5. LOCATE LUBRICATOR(S) NEAR ACTUATORS IN A CONVENIENT LOCATION FOR CLEANING AND MAINTENANCE.
6. THE ARROW ON THE FLOW CONTROL VALVE INDICATES THE DIRECTION OF CONTROLLED FLOW.
7. LOCATE CONTROL DEVICES IN AN AREA WHERE AMBIENT TEMPERATURE DOES NOT EXCEED 45 DEGREES CELSIUS.
8. PIPING RUNS TO FRONT AND BACK ACTUATORS MUST BE OF EQUAL SIZE AND LENGTH.
9. PIPE ALL OPEN EXHAUST PORTS DOWNWARD.
10. ALL PRESSURE SETTINGS GIVEN ARE APPROXIMATE. ACTUAL PRESSURES TO BE RECORDED AT START-UP.

(oval symbol) INDICATES OPERATORS DEVICES MOUNTED ON EXTERIOR OF ENCLOSURE.

(rectangle symbol) INDICATES PIPING TERMINAL IN ENCLOSURE AND ON MACHINE FRAME.

(X) INDICATES CONTROL CIRCUIT AND CONTROL POINT LOCATION.

INSTRUMENT AIR:

INSTRUMENT AIR IS THE AIR SUPPLY WHICH IS NECESSARY TO KEEP THE MACHINE FUNCTIONING SAFELY. IT IS SUPPLIED TO ALL CRITICAL MACHINE CONTROL FUNCTIONS. IT MUST BE CLEAN AND DRY AND DELIVERED AT A PRESSURE NO LESS THAN 80 PSIG. FILTRATION SHOULD BE 50 MICRON OR BETTER. MOISTURE CONTENT SHOULD NOT EXCEED A PRESSURE DEW POINT OF 10 DEGREES CELSIUS AT 100 PSIG.

MILL AIR:

MILL AIR IS THE AIR SUPPLY WHICH IS USED TO OPERATE MACHINE FUNCTIONS WHICH ARE NOT VITAL TO CONTINUOUS MACHINE OPERATION. THE TEMPORARY LOSS OF THIS SUPPLY WILL NOT CAUSE AN IMMEDIATE MACHINE SHUTDOWN. THE MILL AIR SUPPLY SHOULD BE CLEAN AND REASONABLY DRY. MINIMUM AVAILABLE PRESSURE SHOULD BE 80-100 PSIG. FILTRATION SHOULD BE TO 50 MICRON. THE MOISTURE CONTENT SHOULD NOT EXCEED A PRESSURE DEW POINT OF 10 DEGREES CELSIUS AT 100 PSIG.

LEGEND

(1)	UNWIND CLUTCH	-1
(2)	UNWIND BRAKE	-1
(3)	UNWIND HOOK STOP	-1
(4)	FRONT SADDLE CENTERING	-1
(5)	TRIM SLITTERS	-2
(6)	INNER SLITTERS CUTTING	-2
(7)	SLITTER CLAMPS	-2
(8)	LEAD-IN ROLL SHEET THREADER	-3
(9)	LEAD-IN ROLL SHEET HOLDER	-3
(10)	SPREADER/LEAD-IN SHT THREADER AIR	-3
(11)	DRUM SHEET THREADER	-4
(12)	DRUM SHEET HOLDER	-4
(13)	BACK DRUM BRAKE	-4
(14)	FRONT DRUM BRAKE	-4
(15)	RIDER ROLL UNLATCH	-4
(16)	CRADLE UNLATCH	-4
(17)	BACK DRUM SHEET THDING AIR SHOWER	-5
(18)	RIDER ROLL LOADING	-5
(19)	ARTICULATING RIDER ROLL	-6
	VALVE BLOCK LAYOUT	-7

	S	ITEM	QUAN	DESCRIPTION	WIDTH	LENGTH	U/M	SYMBOL	MATERIAL
		5	REF	HOSE ASSY, SELF STORING-SYNFLEX #4016-12-8. .375 HOSE ID WITH FITTINGS #4404-1120 & 4405-0120			IN	284474-209	
		7	REF	JUNCTION BLOCK SNF			IN	M149595	
		9	REF	SWITCH, ELECTRO-OPTIC-GEMS SERIES ELS-1100 #143575, 10-28 VDC, N.O., (4) 22 AWG-PVC JACKETED 12.0 LG			IN	284631-141	POLY
		9A	REF	CONNECTOR, RECEP-MALE-4 POLE-LUMBERG #RSTU-833/2M. 2 M LERO			IN	282971-011	
	1	10	REF	RESERVOIR, AIR/OIL-LUBE DEVICES #R/OR15200-5			IN	275733-203	ALUM
		10A	15	ANTIFREEZE, GLYCOL PROPYLENE (FREEZE BAN) CAMCO MFR #30767			GL	185211-001	GLYCOL
		11	REF	ACCUMULATOR, BLADDER TYPE-WILKES & MCLEAN LTD #030-05			IN	275845-001	AL
		11A	REF	CAP, VALVE-TIRECHECK CUSTOM PRODUCTS CORP #TC-B-5070			IN	268915-086	
	1	22A	1	GAUGE, PRESSURE-MARSH #J6246, 0-60 PSI, .25 NPT			IN	297222-009	
	1	23	4	GAUGE, PRESSURE-MARSH #J6246, 0-100 PSI, .25 NPT			IN	297222-017	
		24	2	GAUGE, PRESSURE-PDI #CDS-1P-002-E DUAL SCALE PSI & BAR, .25 NPT, PANEL FLANGE MOUNT, DRY				287218-016	STEEL
		26	2	GAUGE, PRESSURE-PDI #CDS-1P-007-E DUAL SCALE PSI & BAR, .25 NPT, PANEL FLANGE MOUNT, DRY				297218-018	STEEL
	1	38	2	GAUGE, PRESSURE-PDI #CF-1P-007-A 0-100 PSI, .25 NPT			IN	297222-038	STST
	1	70B	1	REGULATOR, PRESSURE-FAIRCHILD #10232G, W/MTG BRKT #EB-08921, .5-30 PSI, .25 NPT			IN	276642-109	
	1	71	1	REGULATOR, PRESSURE-FAIRCHILD #30259G, 2-100 PSI, .375 NPT	2.2500	5.1250	IN	276642-116	
	1	71B	1	REGULATOR, PRESSURE-FAIRCHILD #10242G (1.5), W/ MTG BRKT #EB-09921, 1-80 PSI, .25 NPT				276642-046	
	1	72	3	REGULATOR, PRESSURE-FAIRCHILD #30253, 2-100 PSI, .375 NPT			IN	276642-105	
		72C	2	REGULATOR, PRESSURE-FAIRCHILD #30235G, .5-30 PSI, .375 NPT			IN	276642-119	
	1	73	1	REGULATOR, PRESSURE-FAIRCHILD #10249G (1.5), W/ MTG BRACKET #EB-09921, 1-80 PSI, .375 NPT			IN	276642-048	
	1	76	1	REGULATOR, PRESSURE-FAIRCHILD #30223G, 0-10 PSI, .375 NPT	2.2500	5.1250	IN	276642-121	
	1	104	13	REGULATOR, PRESSURE-NUMATICS #153RS416J-0164, 6-60 PSI, .375 NPT			IN	276645-035	
	8	110	1	TRANSDUCER, ELECTRIC TO PNEU-FAIRCHILD #T5221-4, 4-20 MA, W/ MTG BRACKET #EA-14598				298381-081	ALUM
		140	2	SNUBBER, PRESSURE-CHEMQUIP #253-E .25 NPT (WATER & LIGHT OIL)			IN	287842-007	
	1	148	1	VALVE, SOL-4 WAY-2 POSN-NUMATICS #153SA439K			IN	287265-080	
	1	149	1	VALVE, SOL-DBL-4 WAY-2 POSN-NUMATICS #152SS400K, .25 NPT, 110-120/60			IN	287265-075	
		150	5	MANIFOLD, SENSOR/TIGER VALVE-.25, 10 POSITION, FESTO #11FB-02-1/4-10-FB0-5555555555-N X-4527, S-MVH-5-1/4-S-B-VI S-PART #118009			IN	266843-115	
		150A	REF	MANIFOLD, VALVE/SENSOR-14 POSN FESTO #18862 TYPE 11FB-02-1/4-14			IN	266843-097	
		150B	REF	CONTROL BLOCK, FESTO #118890 TYPE FB0			IN	268914-089	
		150C	REF	SOCKET, POWER SUPPLY-FESTO #18483 TYPE NTSD-02			IN	268934-018	
		150D	REF	SOCKET, SENSOR-90 DEG ANGLE FESTO #12956 TYPE SIE-WD-TR			IN	268934-015	
		150E	REF	VALVE, SOL-4 WAY-2 POSN-FESTO #118005 TYPE MVH-5-1-1/4-S-B-VI			IN	287288-014	
		150F	1	MANIFOLD, MANUAL-FESTO #151767 TYPE C.BE-VIFDS-02-C8			IN	266843-108	
		160	1	VALVE, SOL-3 WAY-2 POSN-FESTO #7959 MFH-3-1/4-S, 24 VDC, G-1/4 PORTS			IN	287189-007	
		160A	1	MANIFOLD, FESTO #9180 TYPE PR.-5-1/4-2			IN	266843-093	
		160B	2	BOLT, TUBE HOLLOW-FESTO #206147 TYPE VT-1/4-2			IN	257177-001	STEEL
		160C	2	BLANKING CAP, FESTO #3099 TYPE VTM-1/4			IN	268927-028	
		160D	1	SEALING RING, TUBE-FESTO #2224 TYPE 0-1/4, .25	.25		IN	283278-003	PVC
		160E	1	COIL, SOLENOID VALVE-FESTO #4527 TYPE MSFG-24			IN	288925-014	
		160G	1	SUPPRESSOR, CONNECTOR-NORSTAT #MSUD-24752, BLACK W/ CABLE 24V AC/DC			IN	275831-006	
		160H	1	INSERT, LUMINOUS SEAL-FESTO #19149, TYPE MF-LD-12-...-24			IN	268920-009	
	1	167	1	VALVE, BALL-ROT[illegible] [illegible]TUATOR FESTO #30460 TYPE QH-QR-3/8			IN	268121-008	MS
		167A	1	VALVE, SOL-4 WAY-2 POSN-FESTO #32018 MFH-5-1/8-QH-QR-24V			IN	287289-013	
		167B	1	CONNECTOR, SOCKET WITH CABLE 16.5 FT(5M) LONG, FESTO #30937 KMF-1-24-5-LED			IN	269034-018	
		167C	1	BRACKET, MOUNTING-BALL VALVE FESTO #QH-QR-HA-1			MM	258918-007	
		167D	1	COIL, SOLENOID VALVE-FESTO #4527 TYPE MSFG-24			IN	288825-014	
		167E	1	SUPPRESSOR, CONNECTOR-NORSTAT #MSUD-24752, BLACK W/ CABLE 24V AC/DC			IN	275831-006	
		167F	1	INSERT, LUMINOUS SEAL-FESTO #19149, TYPE MF-LD-12-...-24			IN	268920-008	
	1	170	3	VALVE, SOL-2 WAY-NC-ASCO #JKF8210G95, .75 NPT, 120/60, 0-150 PSI C.S.A. CERTIFIED & LABEL REQ'D			IN	266471-044	BRASS
	1	172	4	VALVE, SOL-4 WAY-2 POSN-NUMATICS #153SA415K, .375 NPT, 110-120/60			IN	287285-059	
	1	184	11	VALVE, SOL-4 WAY-2 POSN-NUMATICS #152SA400K, .25 NPT, 110-120/60			IN	287265-060	
B1	1	207	3	VALVE, CHECK-PNEU-TROL #AP10C-30S, .5 NPT			IN	288256-004	
B2	1	208	4	VALVE, FLOW CONTROL-.25 NPT			IN	MC2-75-29-B	BRASS
	1	209	14	VALVE, FLOW CONTROL-.375 NPT			IN	MC2-75-29-C	BRASS
	1	210	2	VALVE, FLOW CONTROL-.5 NPT			IN	MC2-75-29-A	BRASS
	1	213	2	VALVE, NEEDLE-.375 NPT-PNEU-TROL			IN	MC2-75-118-B	
	1	214	1	VALVE, NEEDLE-.5 NPT-PNEU-TROL			IN	MC2-75-118-C	
	1	215	2	VALVE, NEEDLE-.75 NPT-PNEU-TROL			IN	MC2-75-118-D	
	1	218	3	VALVE, QUICK RELEASE-.375 NPT			IN	MC2-75-40-B	
	1	227	7	VALVE, BALL-2 WAY-.375 NPT-WATTS			IN	MC2-75-154-2	
	1	228	1	VALVE, BALL-2 WAY-.5 NPT-WATTS			IN	MC2-75-154-3	
	1	229	4	VALVE, BALL-2 WAY-.75 NPT-WATTS			IN	MC2-75-154-4	
		229A	1	VALVE, MANUAL-3 WAY-2 POSN-FESTO #10417, TYPE W-3-1/2-NPT			IN	287135-004	
		237	REF	VALVE, BALL-MINI-PARKER #MV603-4, .25 NPT			IN	268133-002	BRASS
		238	2	VALVE, BALL-MINI-PARKER #MV609-4, .25 NPT			IN	266133-002	BRASS
	1	266	1	FILTER, AIR-WILKERSON #R21-03-500, W/#MSP-95-990 ELEMENT AND (2) #GRP-95-734 BRKTS, .375 NPT			IN	276528-007	
	1	271	4	FILTER, AIR-MONNIER #201-4300-60 .75 NPT			IN	276527-019	
	1	271A	4	FILTER ELEMENT, MONNIER #24,013			IN	276696-008	
	1	272	4	FILTER, AIR-MONNIER #204-4380-40 .5 NPT			IN	276527-016	
	1	272A	4	FILTER ELEMENT, MONNIER #24,547			IN	276696-013	
	1	276	2	LUBRICATOR, AIR-.375-NORGREN			IN	MC2-75-10-B	
	1	277	1	LUBRICATOR, AIR-.5-NORGREN			IN	MC2-75-10-C	
		294	2	SWITCH, PRESSURE-MERCOID #DB-802-20, SPDT, 3-30 PSI, .25 NPT			MT	284772-084	ALUM
		295	1	SWITCH, PRESSURE-MERCOID #DB-803-20, SPDT, 7.5-120 PSI, .25 NPT				284772-085	ALUM
		335	1	TRANSDUCER, PRESSURE-VIATRAN #345-AMG-OM, 4-20 MA, 100 PSI FSPA, 0 (4MA) TO 50 (20MA) RANGE			IN	298562-082	
		335A	1	CONNECTOR, ELECT-VIATRAN TRANSDUCER #230002-50, W/50 FT CABLE, 3 PAIR, 8 PIN			IN	298913-047	
	1	400	1	VALVE, NEEDLE-PARKER #NV-400-S, .25 NPT			IN	265588-009	STEEL
		500A	3	BRACKET MTG., REGULATOR SNF			IN	2AY41892	
	1	510	REF	COIL, SOL-115/60-ASCO TYPE 29A			IN	MC2-75-122-1	
		511	4	END PLATES KIT, NUMATICS #229-621B			IN	269813-010	
B3		512	6	PLUG, PIPE CSK-NPTF-PARKER #.375 HHP-S			IN	289131-003	ST
		513	18	PLUG, PIPE CSK-NPTF-PARKER #.5 HHP-S			IN	289131-004	ST
		515	2	PLUG, PIPE CSK-NPT-150 LB-.25			IN	284711-522	STST316
	1	530	1	VALVE, FIXED FLOW ORIFICE-O'KEEFE CONTROLS #C-20, .25 NPT MALE, .020 ORIFICE			IN	268821-002	BRASS
		581	5	MUFFLER, EXHAUST-PARKER #EM-37, .375 NPT			IN	278851-014	BRASS
		582	8	MUFFLER, EXHAUST-PARKER #EM-50, .5 NPT			IN	276651-015	BRASS
		572	7	PLUG, BLOCKING DISC-NUMATICS #124-141A			IN	288927-015	
	1	565	1	AIR INTENSIFIER ASSEMBLY SNF			IN	MC1-B-4007	
	1	999	1	VALVE, EXHAUST-ROSS-L-O-X #1523B5002, .75 NPT			IN	287441-005	
		999A	1	SILENCER, MUFFL-AIR-ROSS #5500A6003, 1.0 NPT MALE THD			IN	278851-031	

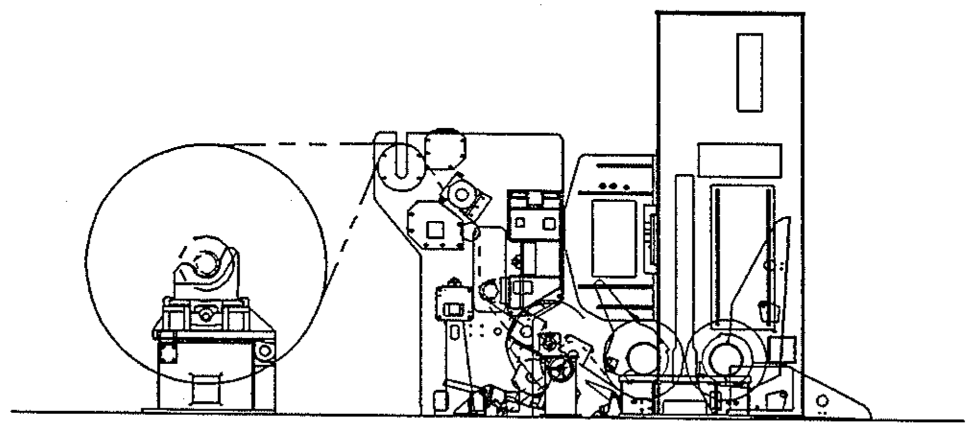

REFERENCE DRAWING SERIES:

CONNECTION DIAGRAM, ARR.	92-5021-0006
PIPING, ARTICULATING RIDER ROLL	50-8701-0069

© 1992, BELOIT CORPORATION, THE INFORMATION ON THIS PRINT IS SUBMITTED IN CONFIDENCE AND MAY NOT BE COPIED.

REVISION: B3 12-JAN-95; B3 26-SEP-94	U OF M: IN	CLASS. OF CHAR.: CRITICAL / MAJOR	ORDER NO.: 8499	CUSTOMER NAME: FRASER PAPER LTD.	BELOIT CORPORATION
DRPR DATE: 10-MAY-94	BUC	FILE NO.	MILL: MADAWASKA, ME.	MACH. NO.: C-2	BELOIT LENOX DIVISION
DWG: 91-5088		DEPT. NO.: 062	DRAWN: DGM; CHK'D.: DKH; APP'D.1: SPK; APP'D.2; SCALE: N/A		REFERENCE DRAWING: LC-2773-91-1-0
		DATE: 29-APR-94	TITLE: PNEUMATIC SCHEMATIC, WINDER		IDENTIFICATION NUMBER: 91-5088-0393-0

BEL-CAD00

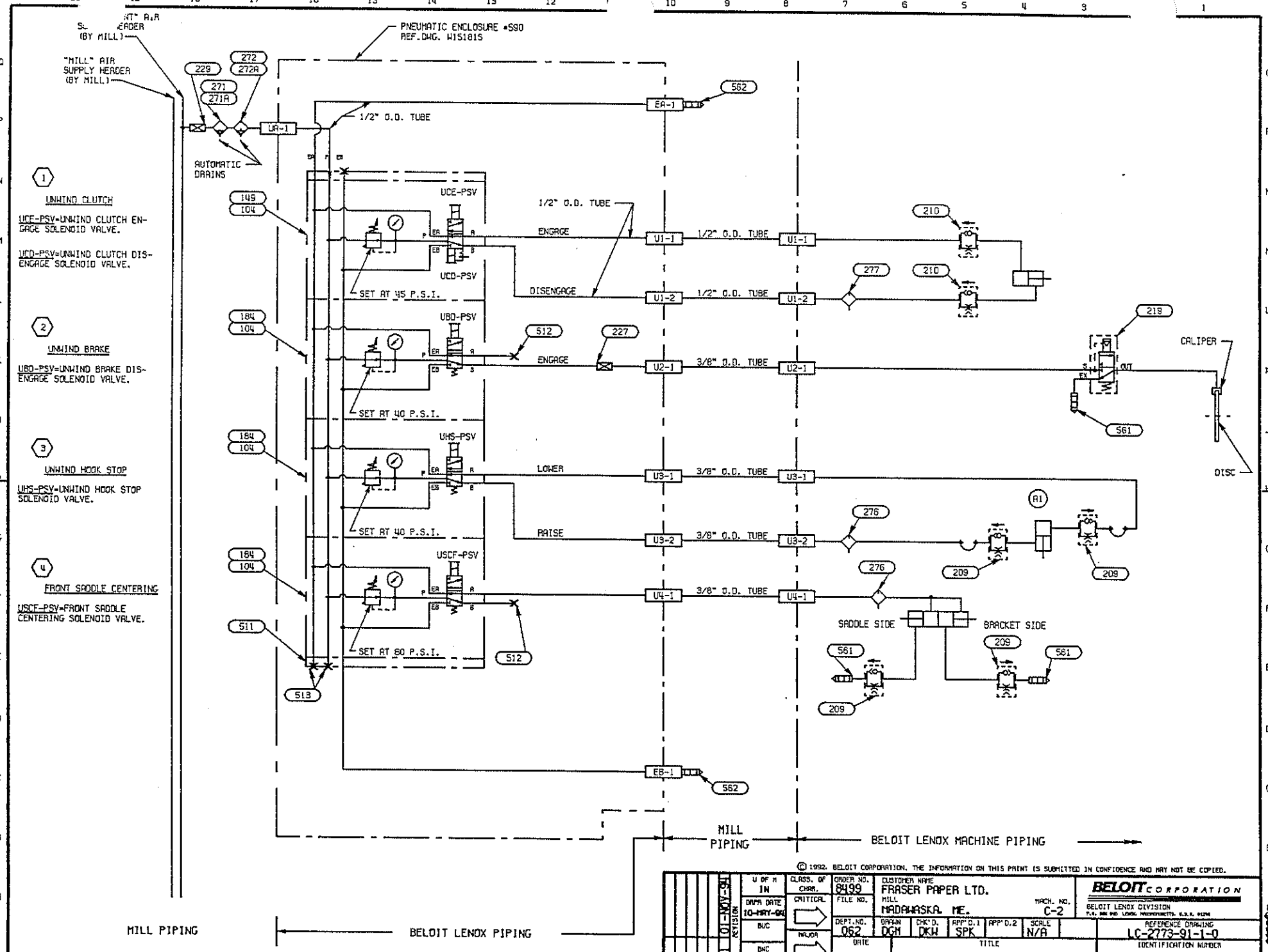

© 1992. BELOIT CORPORATION. THE INFORMATION ON THIS PRINT IS SUBMITTED IN CONFIDENCE AND MAY NOT BE COPIED.

REVISION A1 01-NOV-91	U OF M IN	CLASS. OF CHAR.	ORDER NO. 8499	CUSTOMER NAME FRASER PAPER LTD.		BELOIT CORPORATION	
	DWG DATE 10-MAY-94	CRITICAL	FILE NO.	MILL MADAWASKA, ME.	MACH. NO. C-2	BELOIT LENOX DIVISION	
	BUC	MAJOR	DEPT. NO. 062	DRAWN DGM / CHK'D. DKW / APP'D.1 SPK / APP'D.2	SCALE N/A	REFERENCE DRAWING LC-2773-91-1-0	
	DNC 91-5088		DATE 29-APR-94	TITLE PNEUMATIC SCHEMATIC, WINDER		IDENTIFICATION NUMBER 91-5088-0393-1	

BELOIT-CADD® A

88SC 88

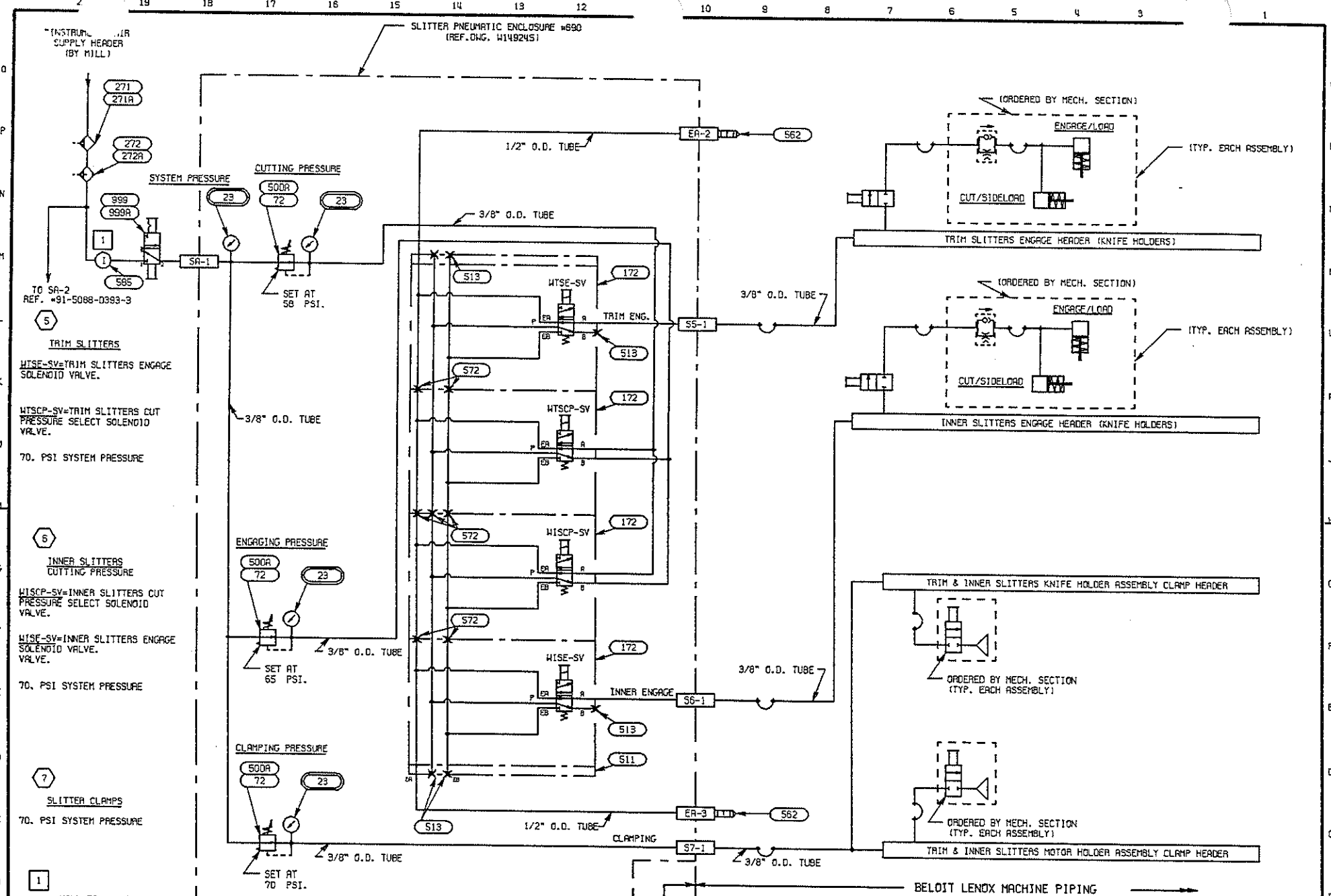

© 1992, BELOIT CORPORATION. THE INFORMATION ON THIS PRINT IS SUBMITTED IN CONFIDENCE AND MAY NOT BE COPIED.

U OF K: IN	CLASS. OF CHAR.: CRITICAL	ORDER NO.: 84199	CUSTOMER NAME: FRASER PAPER LTD.		BELOIT CORPORATION	
DRFR DATE: 10-MAY-94		FILE NO.	MILL: MADAWASKA, ME.	MACH. NO.: C-2	BELOIT LENOX DIVISION	
BUC	MAJOR	DEPT. NO.: 062	DRAWN: DGM	CHK'D.: DKW	APP'D.1: SPK	APP'D.2	SCALE: N/A	REFERENCE DRAWING: LC-2773-91-1-0
DNC: 91-5088		DATE: 29-APR-94	TITLE: PNEUMATIC SCHEMATIC, WINDER					IDENTIFICATION NUMBER: 91-5088-0393-2

REVISION

BELOIT CORPORATION

BBSC 88

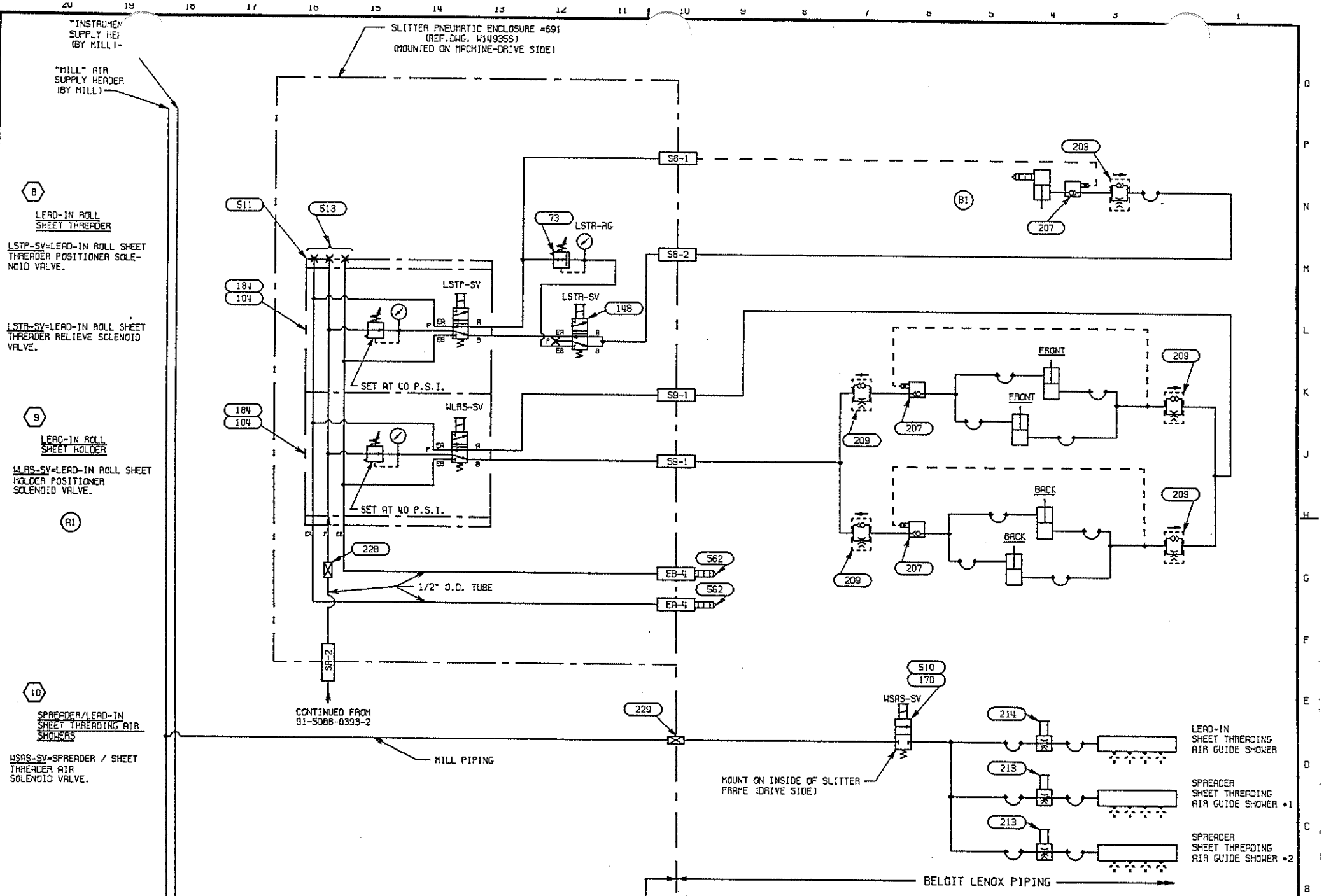

© 1992, BELOIT CORPORATION. THE INFORMATION ON THIS PRINT IS SUBMITTED IN CONFIDENCE AND MAY NOT BE COPIED.

REVISION	U OF M: IN	CLASS. OF CHAR.	ORDER NO. 8499	CUSTOMER NAME: FRASER PAPER LTD.		BELOIT CORPORATION	
	DRAW DATE: 10-MAY-94	CRITICAL	FILE NO.	MILL: MADAWASKA, ME.	MACH. NO. C-2	BELOIT LENOX DIVISION	
	BUC	MAJOR	DEPT. NO. 062	DRAWN DGM	CHK'D. DKW	APP'D.1 SPK	APP'D.2	SCALE N/A	REFERENCE DRAWING LC-2773-91-1-0
	BNC 91-5088		DATE 29-APR-94	TITLE: PNEUMATIC SCHEMATIC, WINDER			IDENTIFICATION NUMBER 91-5088-0393-3

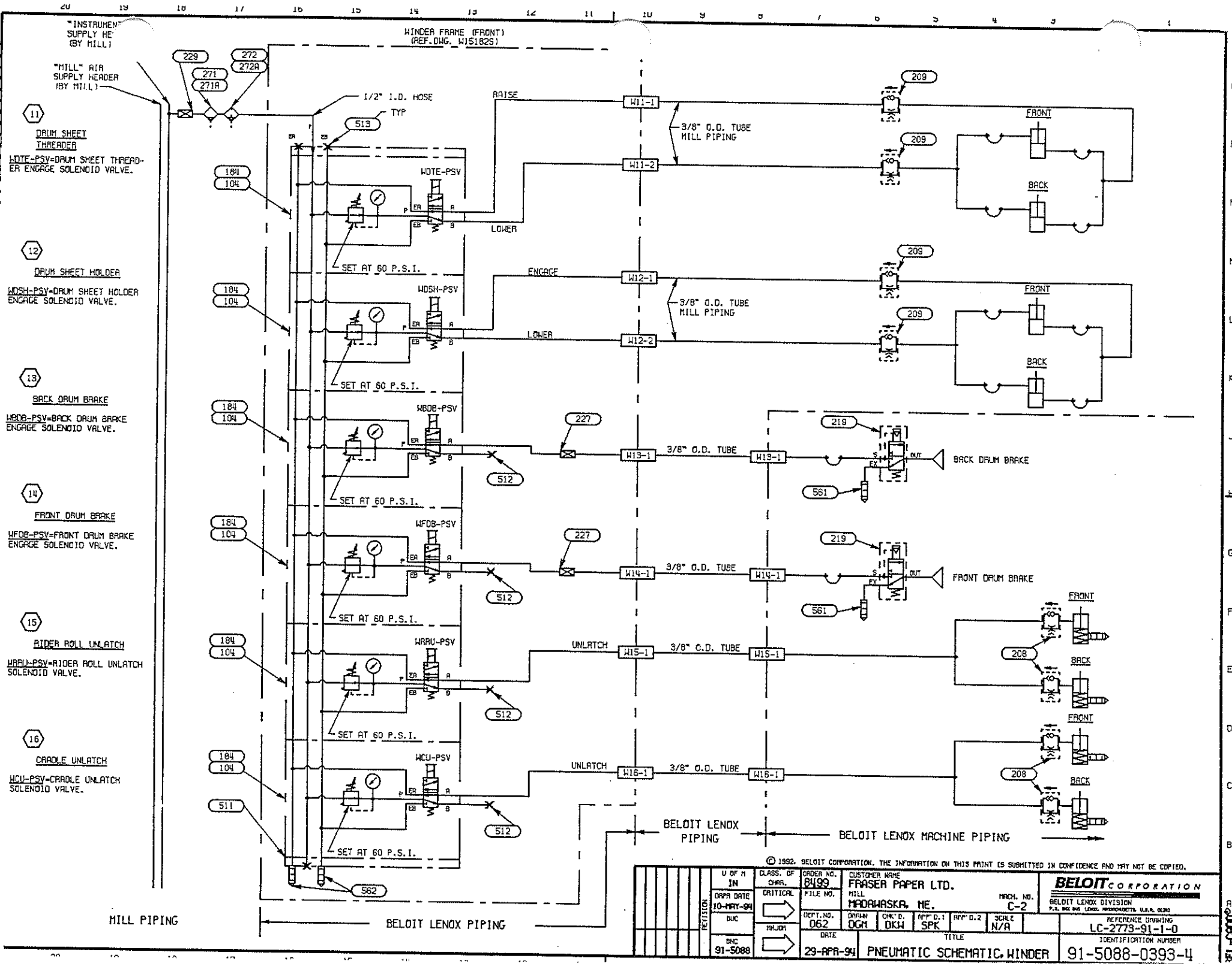

© 1992, BELOIT CORPORATION. THE INFORMATION ON THIS PRINT IS SUBMITTED IN CONFIDENCE AND MAY NOT BE COPIED.

REVISION	U OF M: IN	CLASS. OF CHAR.: CRITICAL	ORDER NO.: 8499	CUSTOMER NAME: FRASER PAPER LTD.	BELOIT CORPORATION — BELOIT LENOX DIVISION
	ORIG. DATE: 10-MAY-94		FILE NO.	MILL: MADAWASKA, ME. MACH. NO.: C-2	
	DUC	MAJOR	DEPT. NO.: 062	DRAWN: DGM; CHK'D.: DKW; APP'D.1: SPK; APP'D.2; SCALE: N/A	REFERENCE DRAWING: LC-2773-91-1-0
	BNC: 91-5088		DATE: 29-APR-94	TITLE: PNEUMATIC SCHEMATIC, WINDER	IDENTIFICATION NUMBER: 91-5088-0393-4

BEL-0800

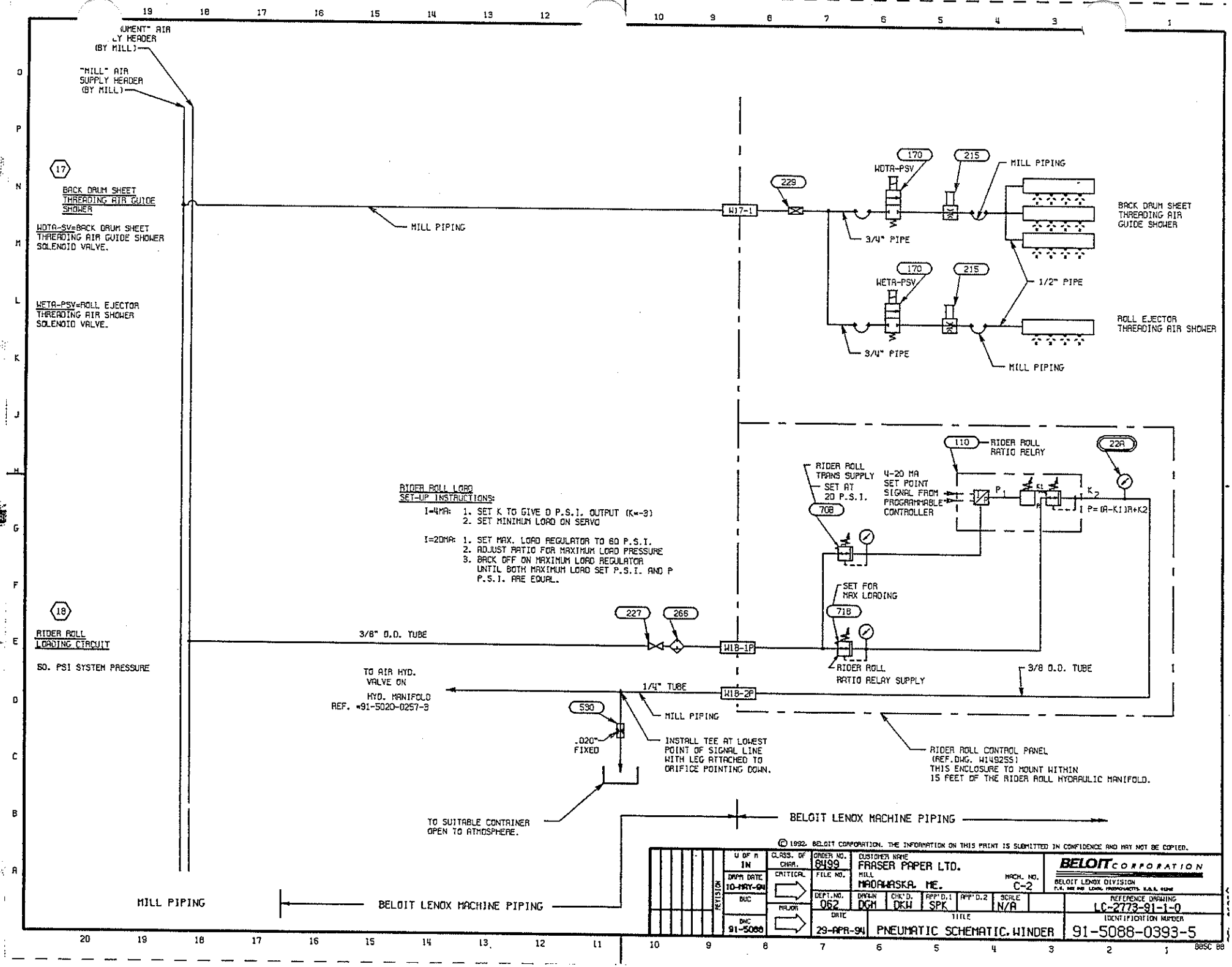
"MILL" AIR SUPPLY HEADER (BY MILL)
17
BACK DRUM SHEET THREADING AIR GUIDE SHOWER
WDTA-SV=BACK DRUM SHEET THREADING AIR GUIDE SHOWER SOLENOID VALVE.
WETA-PSV=ROLL EJECTOR THREADING AIR SHOWER SOLENOID VALVE.
MILL PIPING
W17-1
229
170
WDTA-PSV
215
MILL PIPING
3/4" PIPE
BACK DRUM SHEET THREADING AIR GUIDE SHOWER
WETA-PSV
1/2" PIPE
ROLL EJECTOR THREADING AIR SHOWER
RIDER ROLL LOAD SET-UP INSTRUCTIONS:
I=4MA: 1. SET K TO GIVE 0 P.S.I. OUTPUT (K=-3)
2. SET MINIMUM LOAD ON SERVO
I=20MA: 1. SET MAX. LOAD REGULATOR TO 60 P.S.I.
2. ADJUST RATIO FOR MAXIMUM LOAD PRESSURE
3. BACK OFF ON MAXIMUM LOAD REGULATOR UNTIL BOTH MAXIMUM LOAD SET P.S.I. AND P P.S.I. ARE EQUAL.
110
RIDER ROLL RATIO RELAY
22A
RIDER ROLL TRANS SUPPLY
SET AT 20 P.S.I.
708
4-20 MA SET POINT SIGNAL FROM PROGRAMMABLE CONTROLLER
P=(A-K1)R+K2
SET FOR MAX LOADING
718
18
RIDER ROLL LOADING CIRCUIT
50. PSI SYSTEM PRESSURE
3/8" O.D. TUBE
227
266
W18-1P
RIDER ROLL RATIO RELAY SUPPLY
3/8 O.D. TUBE
TO AIR HYD. VALVE ON HYD. MANIFOLD REF. #91-5020-0257-3
1/4" TUBE
W18-2P
530
.020" FIXED
MILL PIPING
INSTALL TEE AT LOWEST POINT OF SIGNAL LINE WITH LEG ATTACHED TO ORIFICE POINTING DOWN.
RIDER ROLL CONTROL PANEL (REF.DWG. W1492SS) THIS ENCLOSURE TO MOUNT WITHIN 15 FEET OF THE RIDER ROLL HYDRAULIC MANIFOLD.
TO SUITABLE CONTAINER OPEN TO ATMOSPHERE.
BELOIT LENOX MACHINE PIPING
MILL PIPING
BELOIT LENOX MACHINE PIPING
© 1992. BELOIT CORPORATION. THE INFORMATION ON THIS PRINT IS SUBMITTED IN CONFIDENCE AND MAY NOT BE COPIED.
REVISION
U OF M IN
DAPM DATE 10-MAY-94
DUC
DWG 91-5088
CLASS. OF CHAR.
CRITICAL
MAJOR
ORDER NO. 8499
FILE NO.
CUSTOMER NAME FRASER PAPER LTD.
MILL MADAWASKA, ME.
MACH. NO. C-2
DEPT.NO. 062
DRAWN DGH
CHK'D. DKW
APP'D.1 SPK
APP'D.2
SCALE N/A
DATE 29-APR-94
TITLE PNEUMATIC SCHEMATIC, WINDER
BELOIT CORPORATION
BELOIT LENOX DIVISION
REFERENCE DRAWING LC-2773-91-1-0
IDENTIFICATION NUMBER 91-5088-0393-5
88SC 88

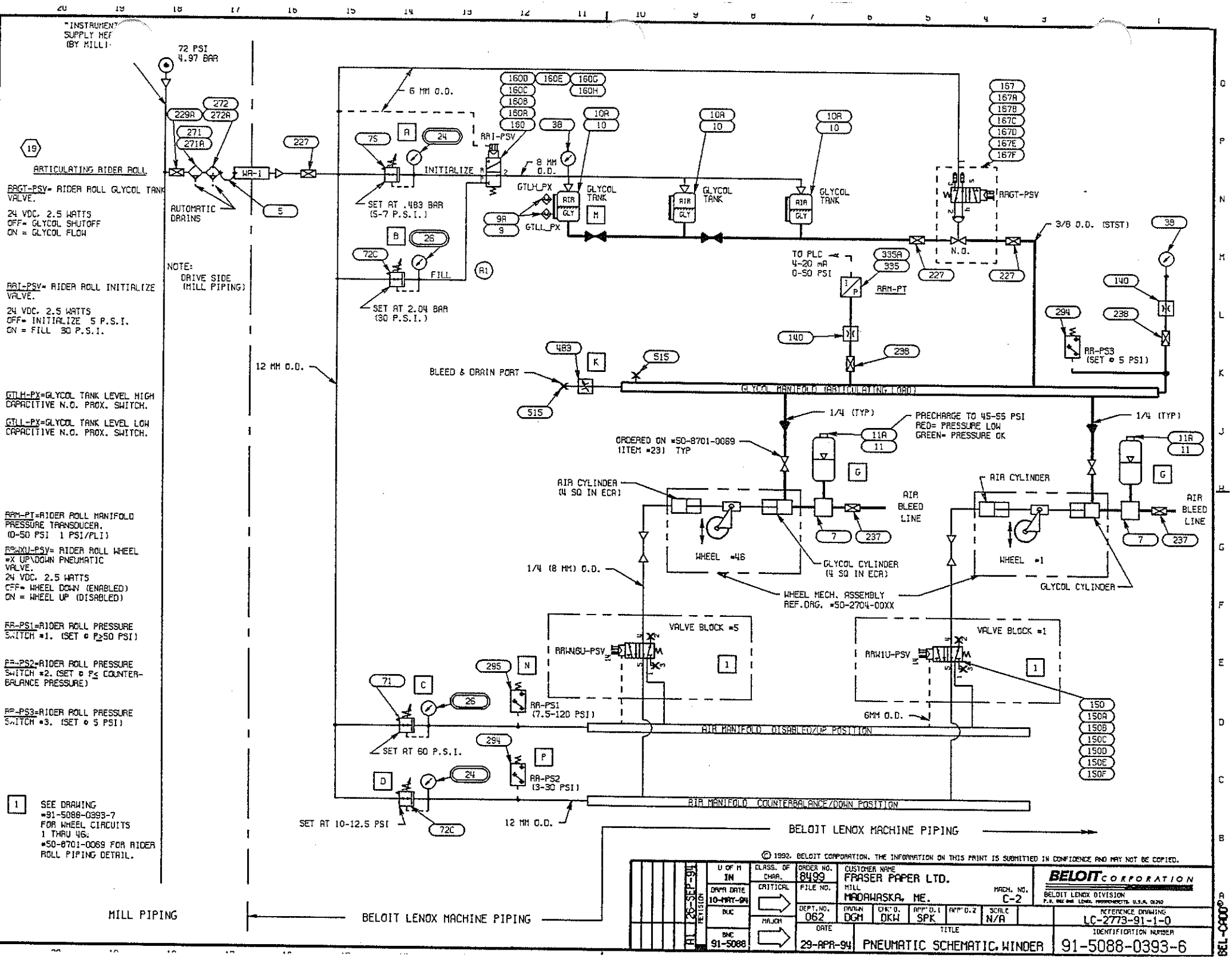
"INSTRUMENT" SUPPLY REF (BY MILL)
72 PSI 4.97 BAR
19
ARTICULATING RIDER ROLL
RRGT-PSV= RIDER ROLL GLYCOL TANK VALVE.
24 VDC. 2.5 WATTS
OFF= GLYCOL SHUTOFF
ON = GLYCOL FLOW
RRI-PSV= RIDER ROLL INITIALIZE VALVE.
24 VDC. 2.5 WATTS
OFF= INITIALIZE 5 P.S.I.
ON = FILL 30 P.S.I.
GTLH-PX=GLYCOL TANK LEVEL HIGH CAPACITIVE N.O. PROX. SWITCH.
GTLL-PX=GLYCOL TANK LEVEL LOW CAPACITIVE N.O. PROX. SWITCH.
RRM-PT=RIDER ROLL MANIFOLD PRESSURE TRANSDUCER. (0-50 PSI 1 PSI/PLI)
RRWXU-PSV= RIDER ROLL WHEEL =X UP\DOWN PNEUMATIC VALVE.
24 VDC. 2.5 WATTS
OFF= WHEEL DOWN (ENABLED)
ON = WHEEL UP (DISABLED)
RR-PS1=RIDER ROLL PRESSURE SWITCH #1. (SET @ P≥50 PSI)
RR-PS2=RIDER ROLL PRESSURE SWITCH #2. (SET @ P≤ COUNTER-BALANCE PRESSURE)
RR-PS3=RIDER ROLL PRESSURE SWITCH #3. (SET @ 5 PSI)
1
SEE DRAWING #91-5088-0393-7 FOR WHEEL CIRCUITS 1 THRU 46.
#50-8701-0069 FOR RIDER ROLL PIPING DETAIL.
MILL PIPING
BELOIT LENOX MACHINE PIPING
6 MM O.D.
8 MM O.D.
12 MM O.D.
6MM O.D.
1/4 (8 MM) O.D.
3/8 O.D. (STST)
1/4 (TYP)
WA-1
AUTOMATIC DRAINS
SET AT .483 BAR (5-7 P.S.I.)
INITIALIZE
FILL
SET AT 2.04 BAR (30 P.S.I.)
NOTE: DRIVE SIDE (MILL PIPING)
RRI-PSV
GTLH_PX
GTLL_PX
GLYCOL TANK
AIR
GLY
N.O.
RRGT-PSV
TO PLC 4-20 mA 0-50 PSI
RRM-PT
RR-PS3 (SET @ 5 PSI)
BLEED & DRAIN PORT
GLYCOL MANIFOLD (ARTICULATING LOAD)
PRECHARGE TO 45-55 PSI
RED= PRESSURE LOW
GREEN= PRESSURE OK
ORDERED ON #50-8701-0069 (ITEM #23) TYP
AIR CYLINDER (4 SQ IN EQA)
AIR BLEED LINE
WHEEL #46
WHEEL #1
GLYCOL CYLINDER (4 SQ IN EQA)
GLYCOL CYLINDER
WHEEL MECH. ASSEMBLY REF.DRG. #50-2704-00XX
VALVE BLOCK #5
VALVE BLOCK #1
RRW46U-PSV
RRW1U-PSV
RR-PS1 (7.5-120 PSI)
RR-PS2 (3-30 PSI)
SET AT 60 P.S.I.
SET AT 10-12.5 PSI
AIR MANIFOLD DISABLED/UP POSITION
AIR MANIFOLD COUNTERBALANCE/DOWN POSITION
BELOIT LENOX MACHINE PIPING
© 1992. BELOIT CORPORATION. THE INFORMATION ON THIS PRINT IS SUBMITTED IN CONFIDENCE AND MAY NOT BE COPIED.
REVISION 1 26-SEP-94
U OF M IN
DRAW DATE 10-MAY-94
DWG BNC 91-5088
CLASS. OF CHAR.
CRITICAL
MAJOR
ORDER NO. 8499
FILE NO.
CUSTOMER NAME FRASER PAPER LTD.
MILL MADAWASKA, ME.
MACH. NO. C-2
DEPT. NO. 062
DRAWN DGM
CHK'D. DKW
APP'D.1 SPK
APP'D.2
SCALE N/A
DATE 29-APR-94
TITLE PNEUMATIC SCHEMATIC, WINDER
BELOIT CORPORATION
BELOIT LENOX DIVISION
REFERENCE DRAWING LC-2773-91-1-0
IDENTIFICATION NUMBER 91-5088-0393-6
BEL-0400

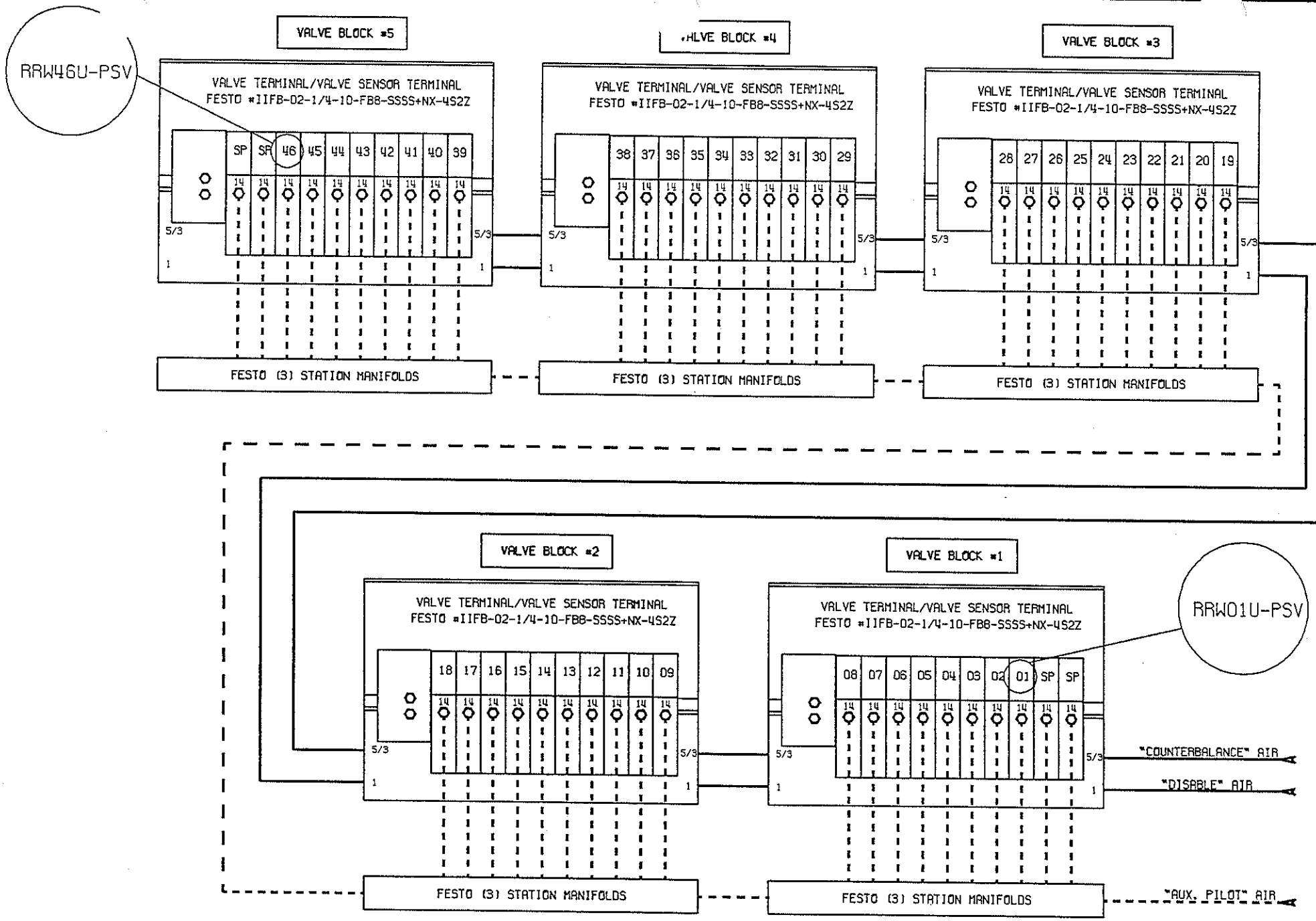

© 1992. BELOIT CORPORATION. THE INFORMATION ON THIS PRINT IS SUBMITTED IN CONFIDENCE AND MAY NOT BE COPIED.

REVISION	U OF M: IN	CLASS. OF CHAR.: CRITICAL	ORDER NO.: 8499	CUSTOMER NAME: FRASER PAPER LTD.	BELOIT CORPORATION
	DRAW DATE: 10-MAY-94		FILE NO.	MILL: MADAWASKA, ME. MACH. NO.: C-2	BELOIT LENOX DIVISION
	DWG:	MAJOR	DEPT. NO.: 062	DRAWN: DGM CHK'D: DKW APP'D.1: SPK APP'D.2: SCALE: N/A	REFERENCE DRAWING: LC-2779-91-1-0
	BNC: 91-5088		DATE: 29-APR-94	TITLE: PNEUMATIC SCHEMATIC, WINDER	IDENTIFICATION NUMBER: 91-5088-0393-7