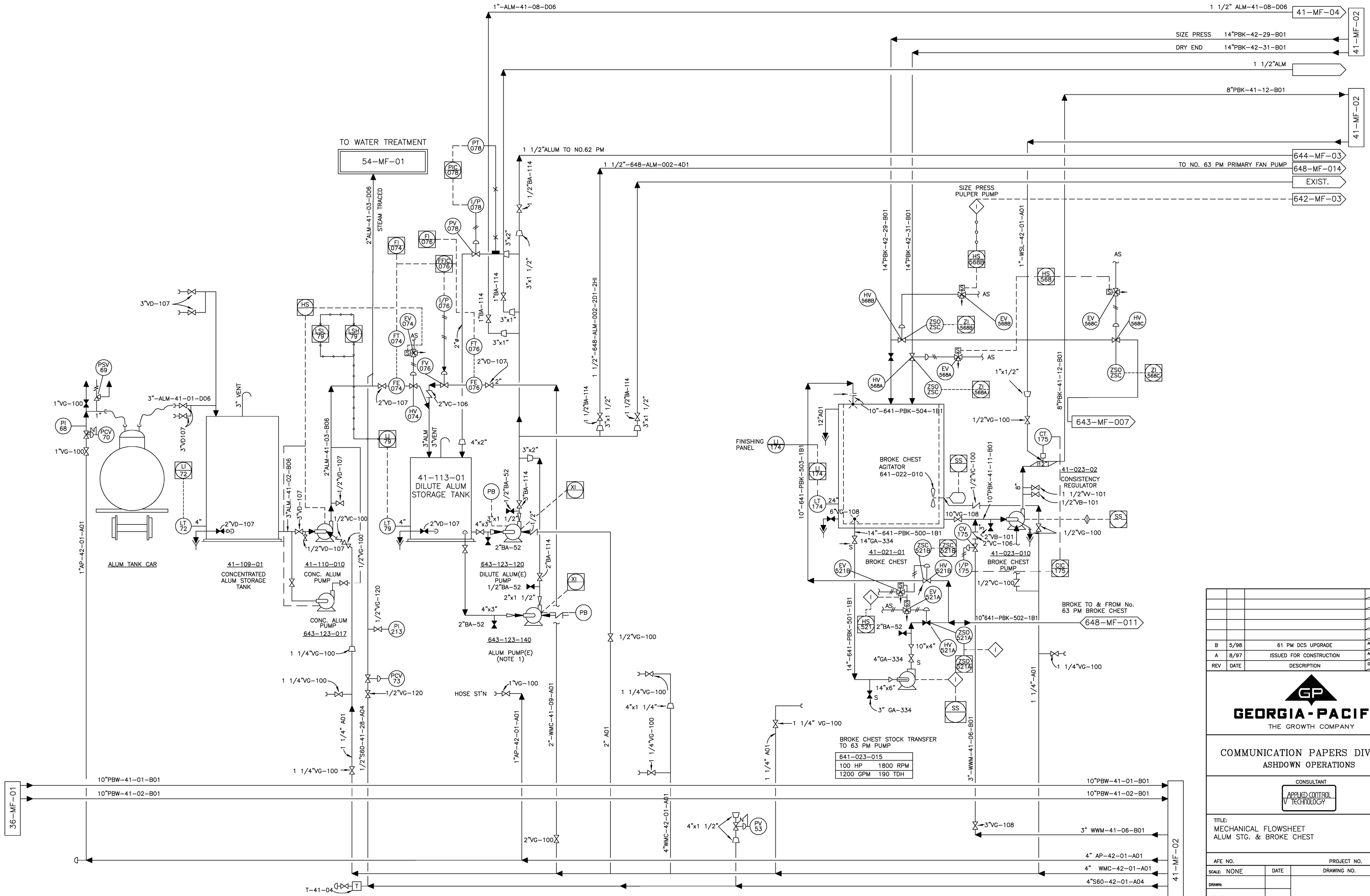

REV	DATE	DESCRIPTION	DRN.	CH'D	AP'D
B	5/98	61 PM DCS UPGRADE	ACT		
A	8/97	ISSUED FOR CONSTRUCTION	ACT		

GEORGIA-PACIFIC
THE GROWTH COMPANY

COMMUNICATION PAPERS DIVISION
ASHDOWN OPERATIONS

CONSULTANT
APPLIED CONTROL TECHNOLOGY

TITLE:
MECHANICAL FLOWSHEET
ALUM STG. & BROKE CHEST

AFE NO. PROJECT NO.

SCALE: NONE	DATE	DRAWING NO.	REV
DRAWN:		641-MF-001	B
CHECKED:			
APPROVED:			
APPROVED:			
DISTRIBUTION:			

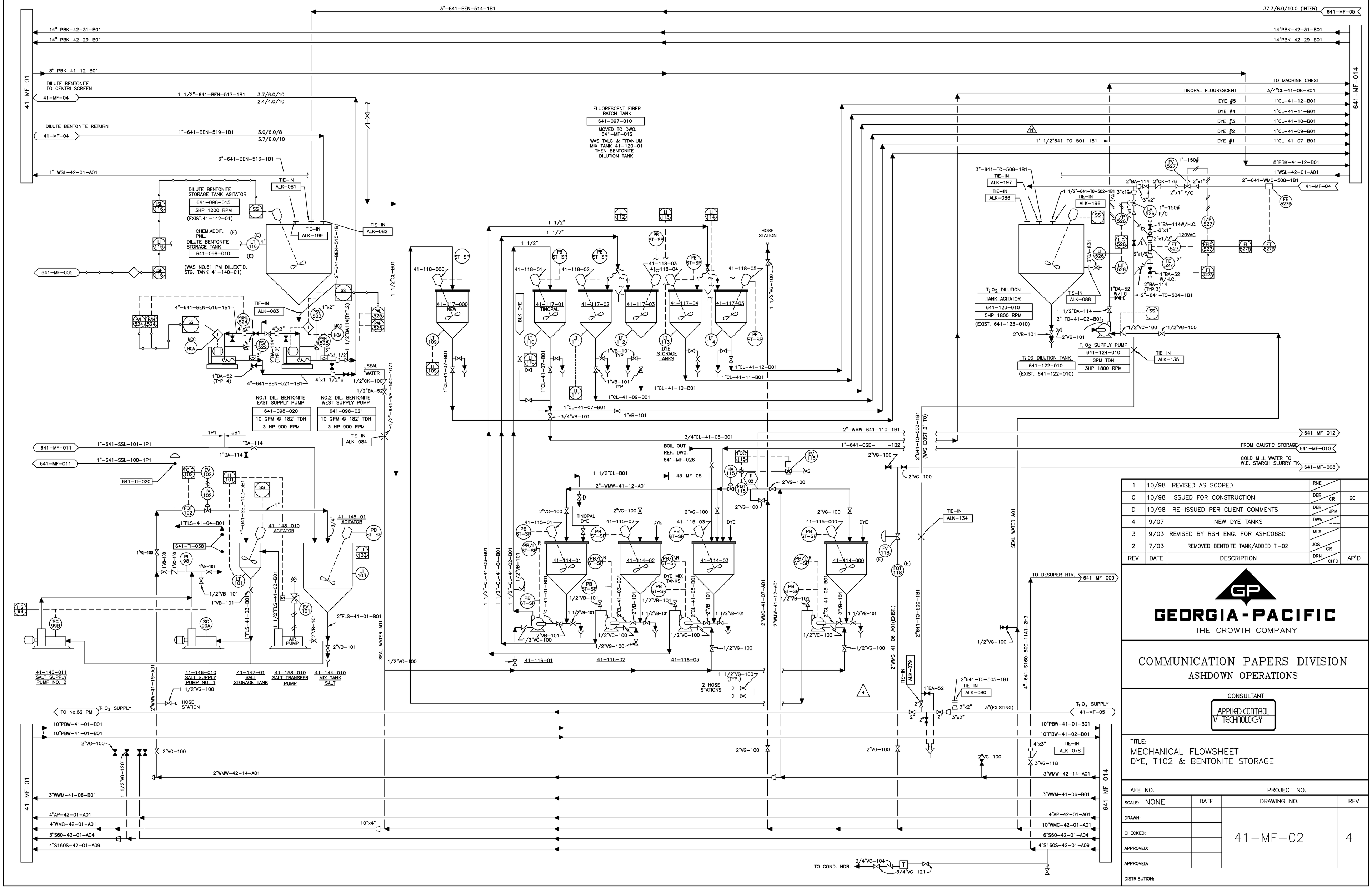

REV	DATE	DESCRIPTION	DRN	CH'D	AP'D
1	10/98	REVISED AS SCOPED	RNE		
0	10/98	ISSUED FOR CONSTRUCTION	DER	CR	GC
D	10/98	RE-ISSUED PER CLIENT COMMENTS	DER	JPM	
4	9/07	NEW DYE TANKS	DWW	---	
3	9/03	REVISED BY RSH ENG. FOR ASHC0680	MLS		
2	7/03	REMOVED BENTOITE TANK/ADDED TI-02	JGS	CR	

GEORGIA-PACIFIC
THE GROWTH COMPANY

COMMUNICATION PAPERS DIVISION
ASHDOWN OPERATIONS

CONSULTANT
APPLIED CONTROL TECHNOLOGY

TITLE:
MECHANICAL FLOWSHEET
DYE, T102 & BENTONITE STORAGE

AFE NO. PROJECT NO.

SCALE: NONE	DATE	DRAWING NO.	REV
DRAWN:		41-MF-02	4
CHECKED:			
APPROVED:			
APPROVED:			

DISTRIBUTION:

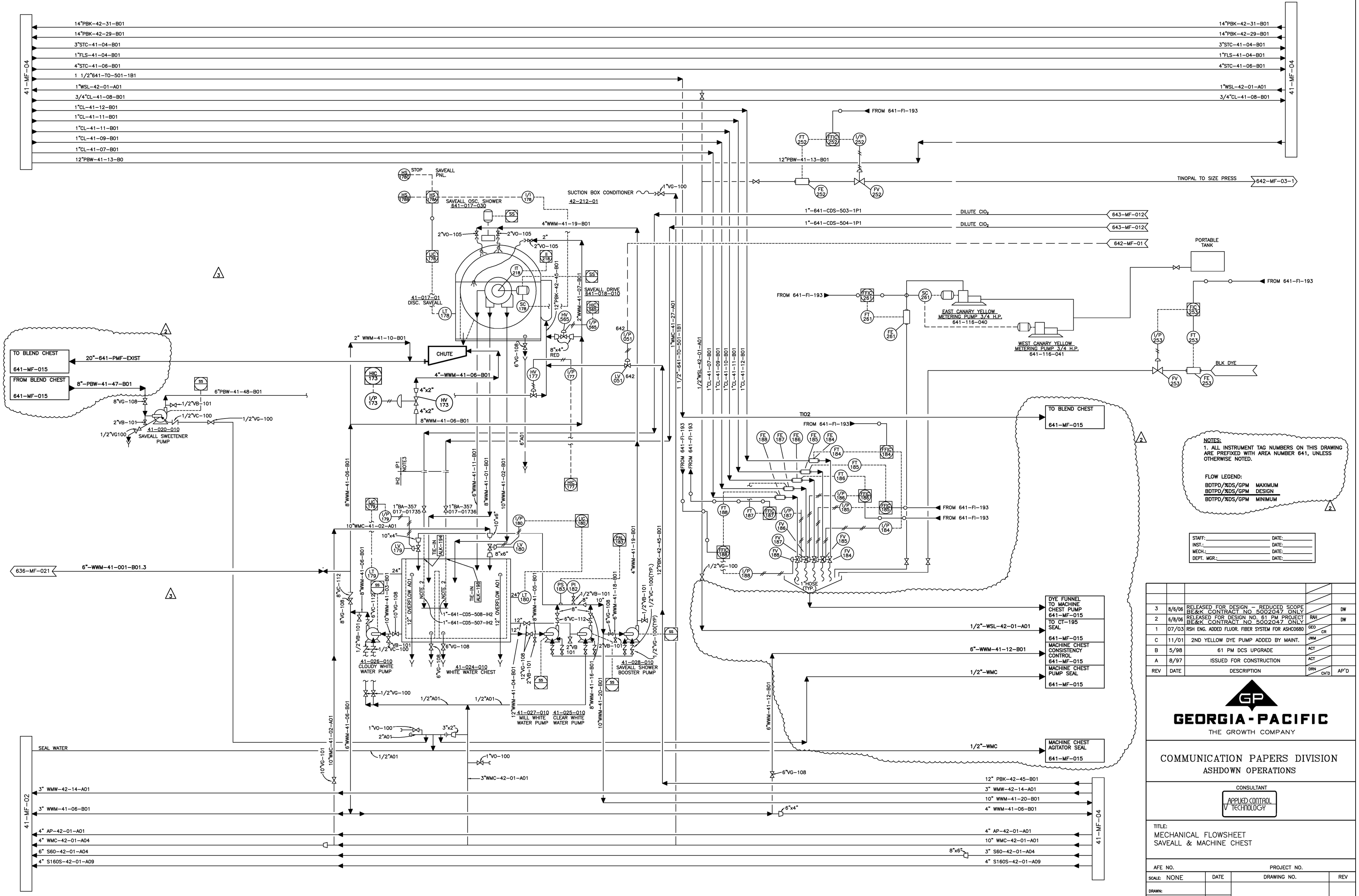

REV	DATE	DESCRIPTION	DRN / CH'D	AP'D
3	8/6/06	RELEASED FOR DESIGN – REDUCED SCOPE BE&K CONTRACT NO 5002047 ONLY		DW
2	6/8/06	RELEASED FOR DESIGN NO. 61 PM PROJECT BE&K CONTRACT NO 5002047 ONLY	RAH	DW
1	07/03	RSH ENG. ADDED FLUOR. FIBER SYSTEM FOR ASHC068D	GEO / CR	
C	11/01	2ND YELLOW DYE PUMP ADDED BY MAINT.	JWM	
B	5/98	61 PM DCS UPGRADE	ACT	
A	8/97	ISSUED FOR CONSTRUCTION	ACT	

GEORGIA-PACIFIC
THE GROWTH COMPANY

COMMUNICATION PAPERS DIVISION
ASHDOWN OPERATIONS

CONSULTANT
APPLIED CONTROL TECHNOLOGY

TITLE:
MECHANICAL FLOWSHEET
SAVEALL & MACHINE CHEST

AFE NO. PROJECT NO.

SCALE: NONE	DATE	DRAWING NO.	REV
DRAWN:		641-MF-003	3
CHECKED:			
APPROVED:			
APPROVED:			
DISTRIBUTION:			

NOTES:
1. REDUCER ORIENTATION PER METSO PIPING INSTRUCTIONS.
2. ALL INSTRUMENT TAG NUMBERS ON THIS DRAWING ARE PREFIXED WITH AREA NUMBER 641, UNLESS OTHERWISE NOTED.

FLOW LEGEND:

BDTPD/%DS/GPM	MAXIMUM
BDTPD/%DS/GPM	DESIGN
BDTPD/%DS/GPM	MINIMUM

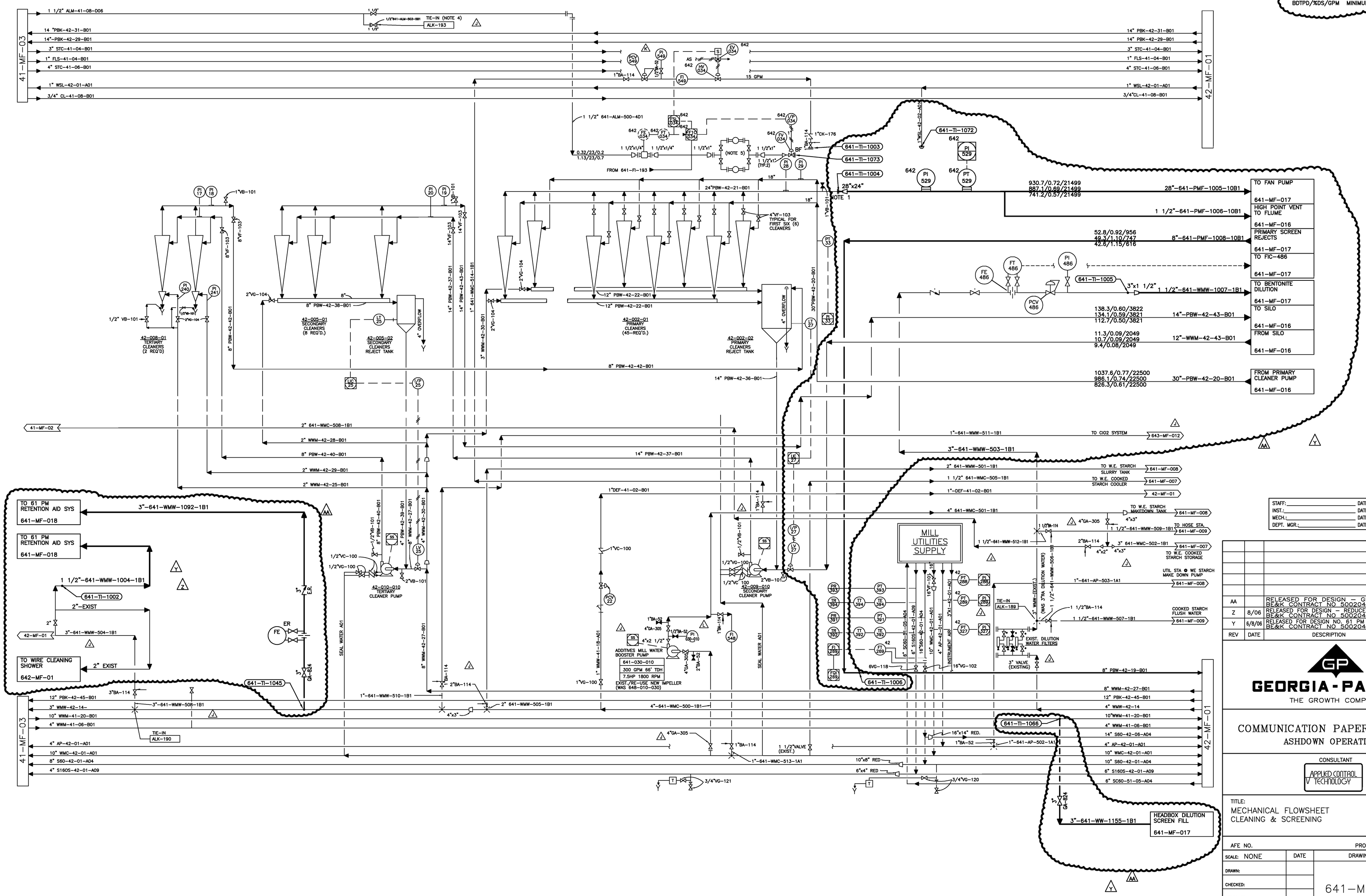

STAFF: DATE:
INST.: DATE:
MECH.: DATE:
DEPT. MGR.: DATE:

REV	DATE	DESCRIPTION	DRN	CH'D
AA		RELEASED FOR DESIGN – GEN REV BE&K CONTRACT NO 5002047 ONLY		
Z	8/06	RELEASED FOR DESIGN – REDUCED SCOPE BE&K CONTRACT NO 5002047 ONLY		DW
Y	6/8/06	RELEASED FOR DESIGN NO. 61 PM PROJECT BE&K CONTRACT NO 5002047 ONLY	RAH	DW

GEORGIA-PACIFIC
THE GROWTH COMPANY

COMMUNICATION PAPERS DIVISION
ASHDOWN OPERATIONS

CONSULTANT
APPLIED CONTROL TECHNOLOGY

TITLE:
MECHANICAL FLOWSHEET
CLEANING & SCREENING

AFE NO. PROJECT NO.

SCALE: NONE	DATE	DRAWING NO.	REV
DRAWN:		641-MF-004	AA
CHECKED:			
APPROVED:			
APPROVED:			
DISTRIBUTION:			

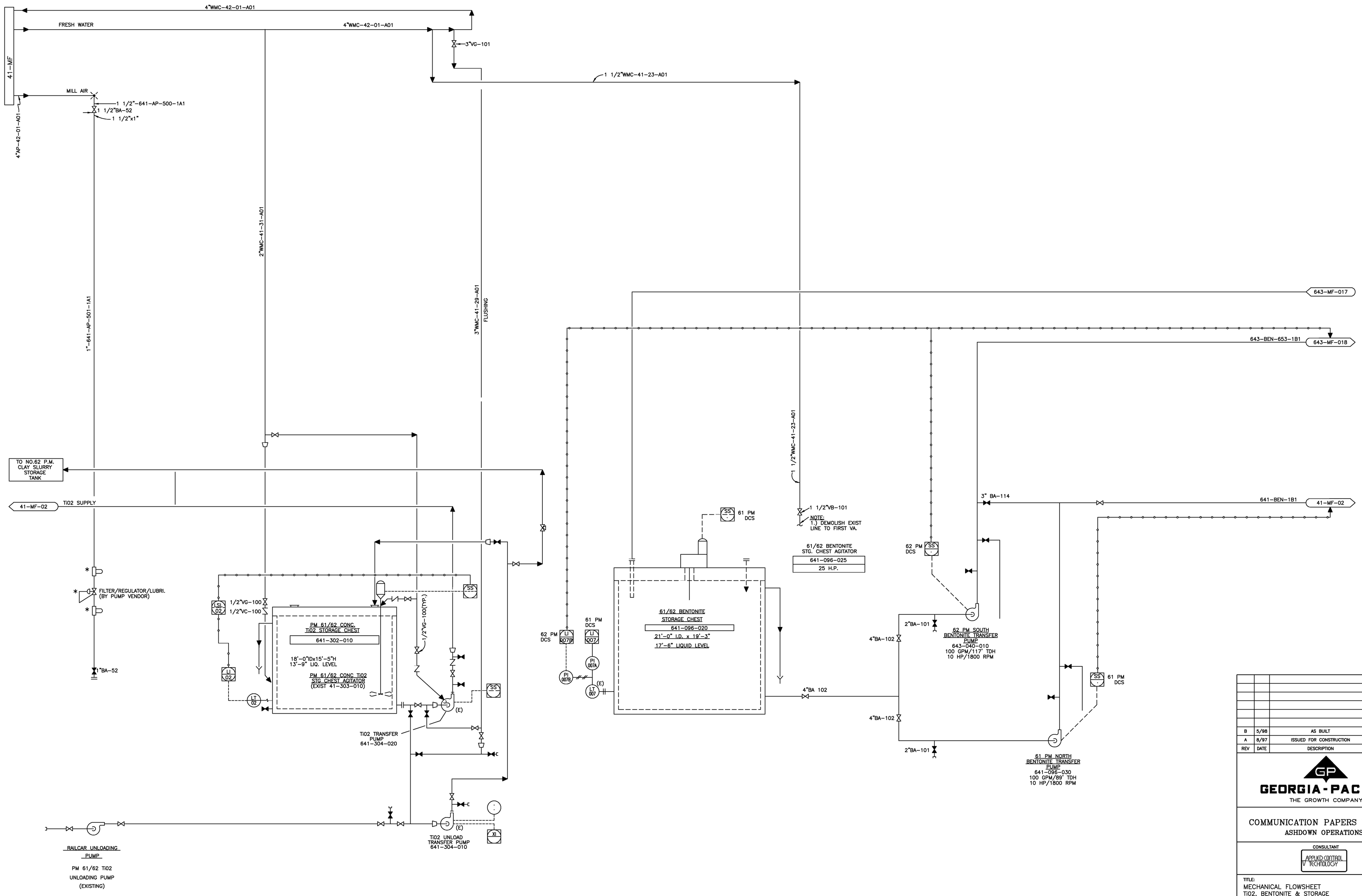

REV	DATE	DESCRIPTION	DRN / CH'D	AP'D
B	5/98	AS BUILT	ACT	
A	8/97	ISSUED FOR CONSTRUCTION	ACT	

GEORGIA-PACIFIC
THE GROWTH COMPANY

COMMUNICATION PAPERS DIVISION
ASHDOWN OPERATIONS

CONSULTANT
APPLIED CONTROL TECHNOLOGY

TITLE:
MECHANICAL FLOWSHEET
TiO2, BENTONITE & STORAGE

AFE NO.		PROJECT NO.	
SCALE: NONE	DATE	DRAWING NO.	REV
DRAWN:	03/06/97	641-MF-005	B
CHECKED:			
APPROVED:			
APPROVED:			
DISTRIBUTION:			

DATE: REVISED BY:

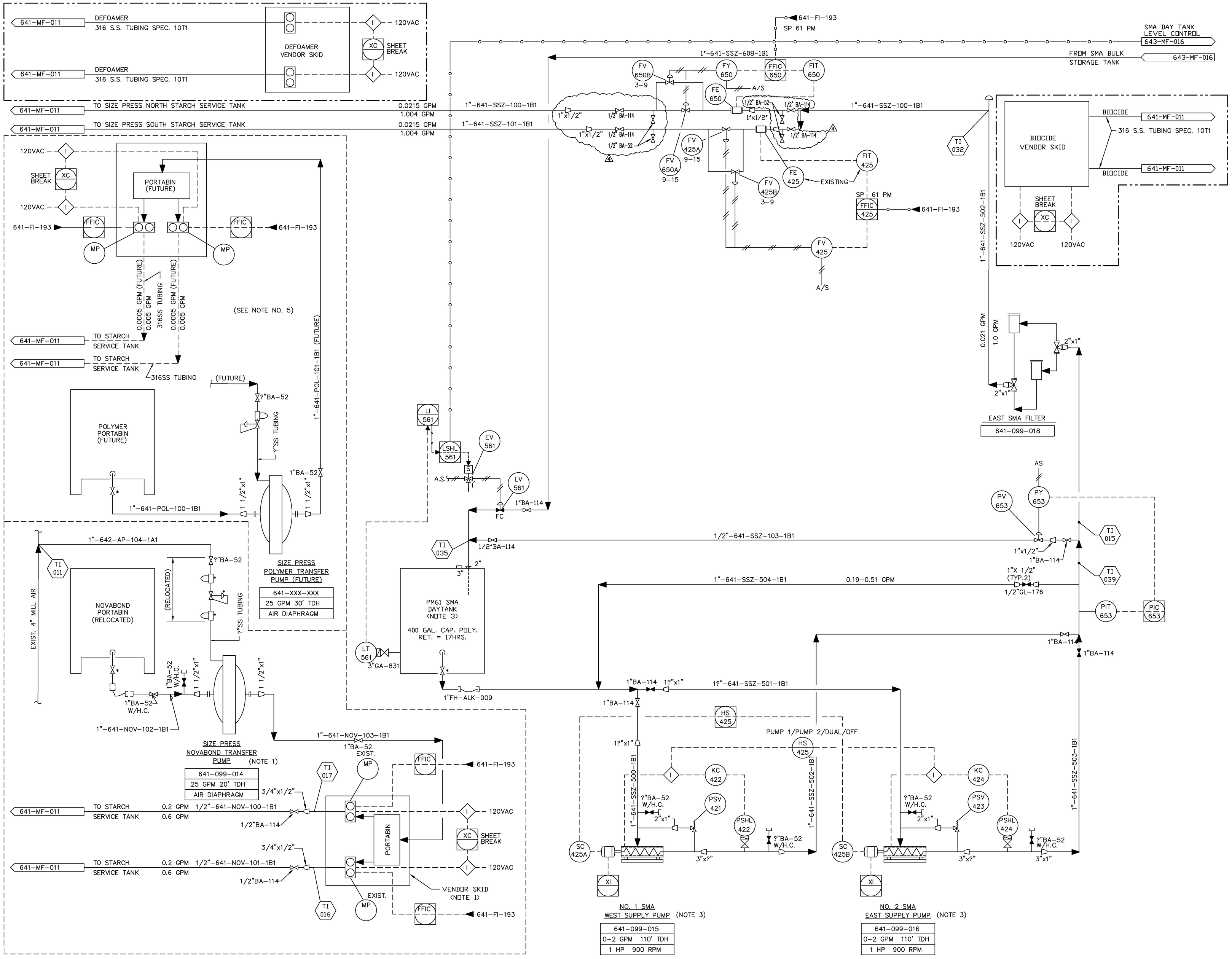

NOTES:

1. RELOCATE METERING PUMP SKID AND DIAPHRAM PUMP TO TENDING SIDE NEAR NEW STARCH TANKS.
2. * VENDOR SUPPLIED.
3. DAYTANK & PUMPS ARE LOCATED IN NO. 61 P.M. BASEMENT ADJACENT TO EXISTING STARCH TANKS.
4. ALL INSTRUMENT TAG NUMBERS ON THIS DRAWING ARE PREFIXED WITH AREA NUMBER 641, UNLESS OTHERWISE NOTED.
5. ALL ITEMS ASSOCIATED WITH THE POLYMER SYSTEM REPRESENT AN INSTALLATION TO BE MADE IN THE FUTURE.

FLOW LEGEND:

FLOW/GPM — MINIMUM
FLOW/GPM — MAXIMUM

REV	DATE	DESCRIPTION	DRN	CHK'D	AP'D
4	12/29/98	REVISED TO AS-BUILT	MM		
3	12/08/98	REVISED STARCH FLOW & CONTROLS	MM		GC
2	10/28/98	REVISED AS SCOPED	RNE		CR
1	10/19/98	REVISED AS SCOPED	DER		
0	10/12/98	ISSUED FOR CONSTRUCTION	DER	CR	GC
N	10/1/98	RE-ISSUED PER CLIENT COMMENTS	DER		
M	9/28/98	ADDED EQ. & LINES FOR SIZE PRESS	MM	JPM	

GEORGIA-PACIFIC
THE GROWTH COMPANY

COMMUNICATION PAPERS DIVISION
ASHDOWN OPERATIONS

CONSULTANT
Brown & Root, Inc.
Engineers • Constructors
Project No.: JR-1377

TITLE:
ENGINEERING FLOW DIAGRAM
NO. 61 PAPER MACHINE
SURFACE SIZE (SMA), NOVABOND & POLYMER

AFE NO.
PROJECT NO. AA-142

SCALE: NONE	DATE	DRAWING NO.	REV
DRAWN: AHS	09-24-93	641-MF-006	4
CHECKED: SCV	09-30-93		
APPROVED: LDW	12-22-93		
APPROVED: RAF	12-22-93		

DISTRIBUTION:

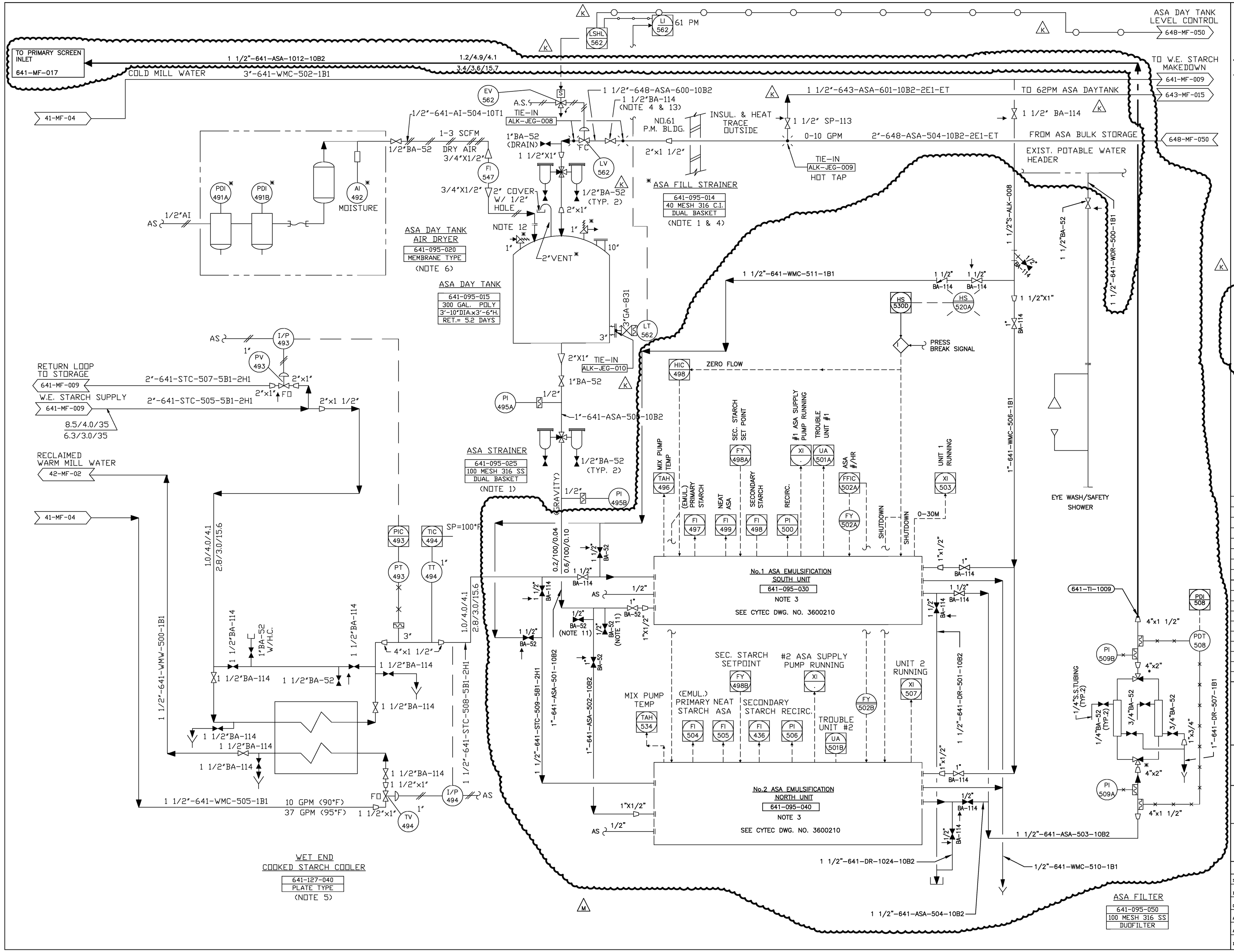

NOTES:

1. ASA STRAINER TO BE ARRANGED TO HINDER WATER CONTAMINATION OF ASA.
2. ~~LOCATE FILTER NEAR INJECTION POINT AT INLET TO CENTRISCREEN.~~
3. LOCATE ASA EMULSIFICATION UNITS ON OPERATING FLOOR. ASA UNITS FURNISHED BY CYTEC INC.
4. LOCATE VALVE & STRAINER ABOVE FLOOR FOR ACCESS.
5. LOCATE COOLER IN BASEMENT ADJACENT TO WET END STARCH COOKER.
6. LOCATE AIR DRYER ADJACENT TO DAY TANK WITHIN EASY ACCESS.
7. REF. DWG. 641-MF-006 FOR ALKALINE CONVERSION DGN. BASIS, LEGEND AND GENERAL NOTES.
9. ALL INSTRUMENT TAG NUMBERS ON THIS DRAWING ARE PREFIXED WITH AREA NUMBER 641, UNLESS OTHERWISE NOTED.
10. INSTALL A 1/2" THREADED PIPE NIPPLE ON VALVE & CUT IT FLUSH W/ END OF VALVE.
11. 2" S.S. BLIND FLANGE WITH 1/2" NPT DRILLED & TAPPED.
12. REUSE EXISTING VALVE.

STAFF:	DATE:
INST.:	DATE:
MECH.:	DATE:
DEPT. MGR.:	DATE:

FLOW LEGEND (SLURRY)

BDTD/%DS/GPM DESIGN
BDTD/%DS/GPM MAXIMUM

FLOW LEGEND (ClO_2)

#ClO_2/DAY/g/l CONC./GPM

REV	DATE	DESCRIPTION	DRN	CHK'D	AP'D
N	8/06	RELEASED FOR DESIGN REDUCED SCOPE BE&K CONTRACT NO 5002047 ONLY			DV
M	6/8/06	RELEASED FOR DESIGN NO. 61 PM PROJECT BE&K CONTRACT NO 5002047 ONLY	RAH		DV
I		ADDED 1 1/2" ASA LINE TO 62PM ASA DAYTANK	JWG		
		& INST. @ 61PM ASA DAY TANK. 62PM ALK. CONV.			
		EST. B&R JOB #JR-1497,G.P. JOB #			
H	03-04-94	REV.LINE NO. & ADDED VENT VAS.	EHC	TM	RAF
G	02-10-94	ADDED FI, LINE No. & NOTE 12;	AG	TM	RAF
		REV. PT. CONN.			
F	01-24-94	ADDED VALVE CALL-OUT, REV. EQ.	EHC	TM	RAF
		No. & NAMES, LINE & VA. SIZE			
E	01-14-94	ADDED ASA STRAINER	AG	TM	RAF
		ADDED FLUSH LINE&PURGE VALVES;			
		CHANGED LINE SIZES, REV. INSTR.			
D	12-21-93	CONSTRUCTION	SL	TM	
L	5/98	AS BUILT	ACT		
K	11-1-95	CONSTRUCTION (JEG 07-J647-01)	KML		
J	9-15-95	GEN. REV. PER (JEG-07J64701)	KML		

GEORGIA-PACIFIC
THE GROWTH COMPANY

COMMUNICATION PAPERS DIVISION
ASHDOWN OPERATIONS

CONSULTANT
Brown & Root, Inc.
Engineers - Constructors
Project No.: JR-1377

TITLE:
ENGINEERING FLOW DIAGRAM
NO.61 PM W.E. STARCH COOLER & ASA EMULS. UNITS
ALKALINE CONVERSION

AFE NO. PROJECT NO. AA-142

SCALE: NONE	DATE	DRAWING NO.	REV
DRAWN: EHC	08-30-93	641-MF-007	N
CHECKED: SCV	09-30-93		
APPROVED: LDW	12-21-93		
APPROVED: RAF	12-21-93		

DISTRIBUTION:

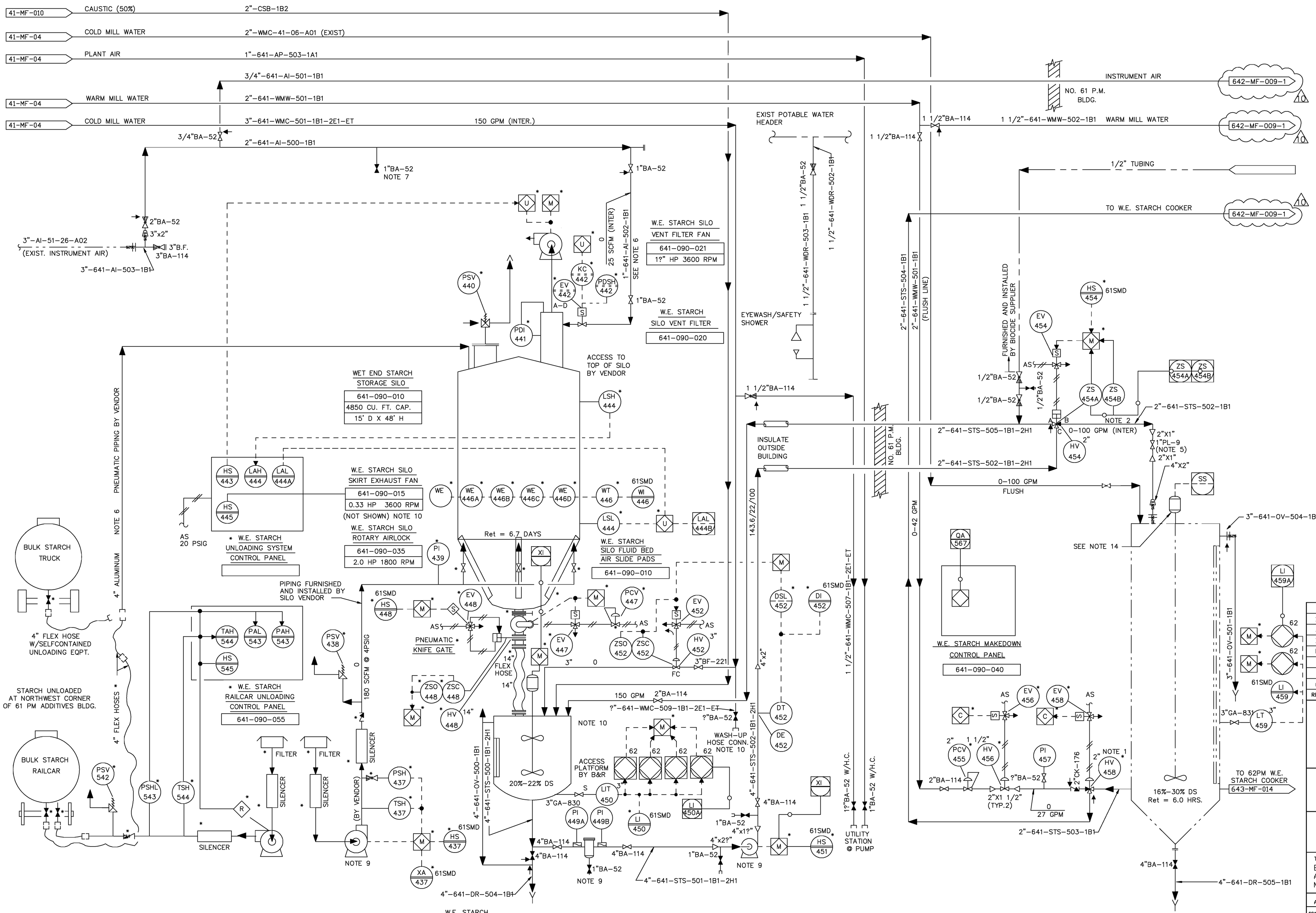

NOTES:

1. LOCATE 3-WAY VALVE FLANGE ON TANK TO PREVENT STARCH BUILDUP.
2. SLOPE PIPE DOWNWARD TO TANK FROM VALVE.
3. DELETED
4. * VENDOR SUPPLIED.
5. VALVE SET INITIALLY @ 50% CLOSED.
6. PIPING FROM GRADE TO SILO ROOF SUPPLIED AND INSTALLED BY VENDOR.
7. PROVIDE VALVES EVERY 10' + FOR INSTRUMENTATION USE AS REQ'D.
8. a. M * STARCH MAKEDOWN CONTROL PANEL (61SMCP) LOGIC.
   b. U * STARCH UNLOADING PANEL (61STUCP) LOGIC.
   c. C * STARCH COOKER PANEL (61SCP) LOGIC.
   d. R * STARCH RAILCAR UNLOADING CONTROL PANEL (61RUC) LOGIC.
9. EQUIPMENT LOCATED OUTSIDE AND ADJACENT TO SILO SKIRT.
10. LOCATED INSIDE SILO SKIRT.
11. FOR ALKALINE CONVERSION DESIGN BASIS SEE DWG. 641-MF-006.
12. ALL PANEL MOUNTED INSTRUMENTS ARE LOCATED IN/ON THE STARCH MAKEDOWN PANEL (61SMCP) UNLESS OTHERWISE NOTED.
13. ALL INSTRUMENT TAG NUMBERS ON THIS DRAWING ARE PREFIXED WITH AREA NUMBER 641, UNLESS OTHERWISE NOTED.
14. AGITATOR MOTOR MUST BE CAPABLE OF BEING POWERED BY EITHER 61PM OR 62PM.

FLOW LEGEND (SLURRY)
BDTD/%DS/GPM DESIGN
BDTD/%DS/GPM MAXIMUM

FLOW LEGEND (ClO_2)
#ClO_2/DAY/g/l CONC./GPM

REV	DATE	DESCRIPTION	DRN	CKD	AP'D
10	10/98	Corrected sheet numbers	mFV		
J	5/98	61 PM DCS UPGRADE	MEF		
I	11-1-95	CONSTRUCTION (JEG 07-J647-01)	KML		
H		ADDED NOTE 14 & LINE TO 62PM W.E. STARCH COOKER. 62PM ALK. CONV. EST. B&R JOB #JR-1497, G.P. JOB #	JWG		
G	25-13-94	DELETED TE-452	AHS	DW	RAF

GEORGIA-PACIFIC
THE GROWTH COMPANY

COMMUNICATION PAPERS DIVISION
ASHDOWN OPERATIONS

CONSULTANT
Brown & Root, Inc.
Engineers • Constructors
Project No.: JR-1377

TITLE:
ENGINEERING FLOW DIAGRAM
ADDITIVES No.61 PM W.E.-STARCH SILO, MAKEDOWN & SLURRY TANKS

AFE NO.
PROJECT NO. AA-142

SCALE: NONE	DATE	DRAWING NO.	REV
DRAWN: AHS	09-23-93	641-MF-008 Sheet 1 of 2	10
CHECKED: SCV	09-30-93		
APPROVED: LDW	12-22-93		
APPROVED: RAF	12-22-93		

DISTRIBUTION:

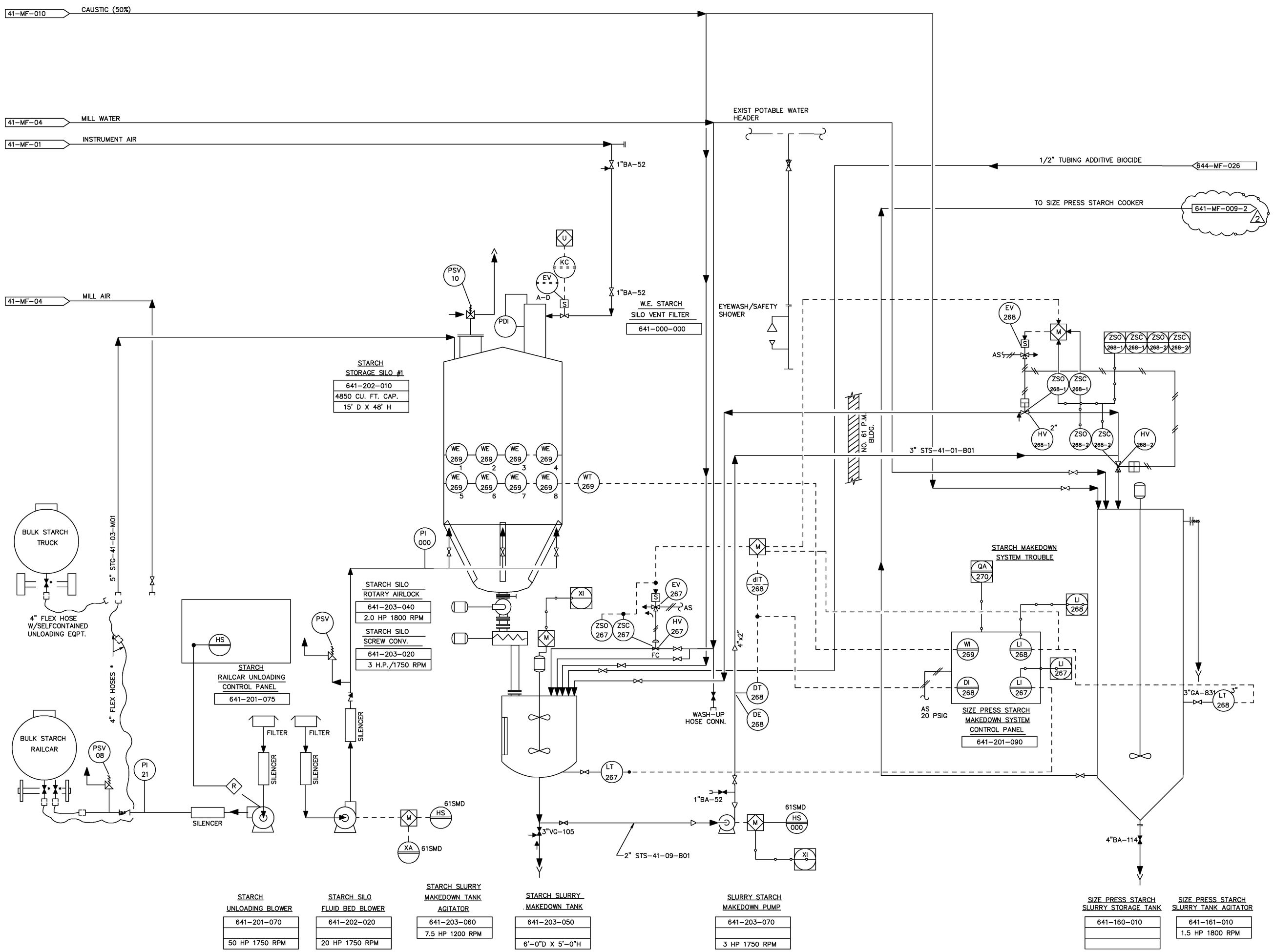

NOTES:

1. a. (M) STARCH MAKEDOWN CONTROL PANEL (61SMCP) LOGIC.
   b. (R) STARCH RAILCAR UNLOADING CONTROL PANEL (61RUC) LOGIC.
2. ALL PANEL MOUNTED INSTRUMENTS ARE LOCATED IN/ON THE STARCH MAKEDOWN PANEL (61SMCP) UNLESS OTHERWISE NOTED.
3. ALL INSTRUMENT TAG NUMBERS ON THIS DRAWING ARE PREFIXED WITH AREA NUMBER 641, UNLESS OTHERWISE NOTED.

REV	DATE	DESCRIPTION	DRN / CK'D
A	5/98	61 PM DCS UPGRADE	ACT

GEORGIA-PACIFIC
THE GROWTH COMPANY

COMMUNICATION PAPERS DIVISION
ASHDOWN OPERATIONS

CONSULTANT
APPLIED CONTROL TECHNOLOGY

TITLE:
ENGINEERING FLOW DIAGRAM SIZE PRESS ADDITIVES No.61 PM -STARCH SILO, #1 MAKEDOWN & SLURRY TANKS

AFE NO.
PROJECT NO. AA-142

SCALE: NONE	DATE	DRAWING NO.	REV
DRAWN:		641-MF-008 Sheet 2 of 2 (2)	2
CHECKED:			
APPROVED:			
APPROVED:			
DISTRIBUTION:			

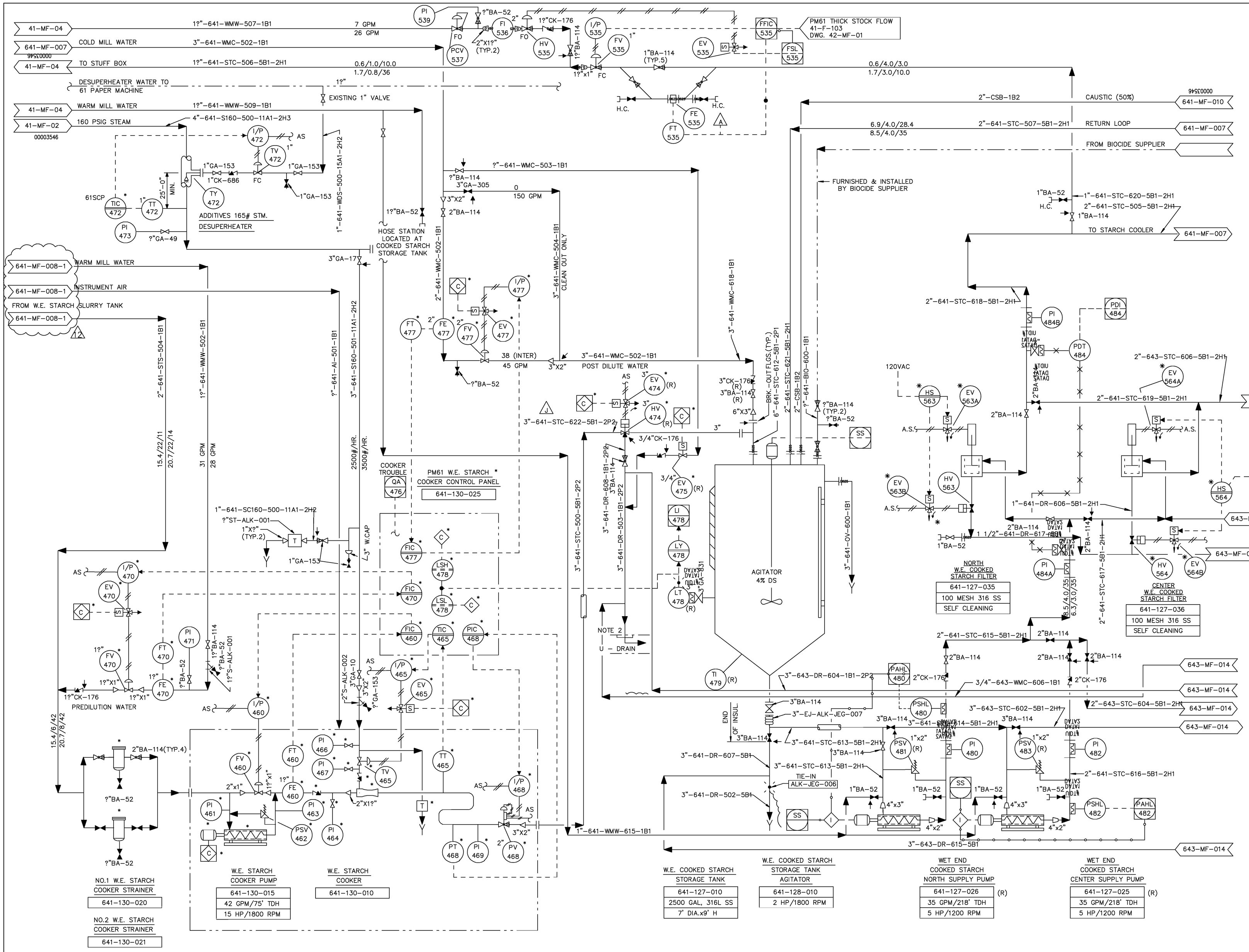

* VENDOR SUPPLIED LOGIC

NOTES:

1. * VENDOR SUPPLIED
2. PROVIDE SOLID U-DRAIN COVER AT COOKER FLUSH LINE PENETRATIONS.
3. STARCH COOKER PANEL (61SCP) LOGIC.
4. ALL PANEL MOUNTED INSTRUMENTS ARE LOCATED IN/ON THE STARCH COOKER PANEL (61SCP) UNLESS OTHERWISE NOTED.
5. FOR DESIGN BASIS SEE DWG. 641-MF-006.
6. ALL INSTRUMENT TAG NUMBERS ON THIS DRAWING ARE PREFIXED WITH AREA NUMBER 641, UNLESS OTHERWISE NOTED.

FLOW LEGEND (SLURRY)

BDTD/%DS/GPM	DESIGN
BDTD/%DS/GPM	MAXIMUM

FLOW LEGEND (ClO_2)

#ClO_2/DAY/g/l CONC./GPM

REV	DATE	DESCRIPTION	DRN	CHK'D	AP'D
12	10/98	Corrected sheet numbers	mfv		
11	5/98	61 PM DCS UPGRADE	ACT		
10	11-1-95	CONSTRUCTION (JEG 07-J647-01)	KML		
9	9-15-95	GEN. REV. PER (JEG-07J64701)	KML		
8		ADDED NEW W.E. COOKED STARCH STG. TANK & TIE-INS TO EXIST. PIPING. ADDED NEW NORTH COOKED STARCH FILTER. DEMOTO EXIST. COOKED STARCH FILTER & RELOCATED STARCH SUPPLY PUMPS. 60% ALK. CONV. EST. BY AA-1497/C.P.	JWC		
7	03-04-94	ADDED FLUSH & VENT VAS.	EHC	TM	RAF
6	02-08-94	ADDED STM. TRAP	AG	TM	RAF
5	01-24-94	CONSTRUCTION	EHC	TM	RAF
4	12-21-93	CONSTRUCTION	SDL	TM	RAF

GEORGIA-PACIFIC
THE GROWTH COMPANY

COMMUNICATION PAPERS DIVISION
ASHDOWN OPERATIONS

CONSULTANT
Brown & Root, Inc.
Engineers • Constructors
Project No.: JR-1377

TITLE:
ENGINEERING FLOW DIAGRAM
NO. 61 P.M. ADDITIVES
W.E. STARCH COOKING AND MACHINE SUPPLY

AFE NO.
PROJECT NO. AA-142

SCALE: NONE	DATE	DRAWING NO.	REV
DRAWN: EHC	09-22-93	641-MF-009 Sheet 1 of 2	12
CHECKED: SCV	10-30-93		
APPROVED: LDW	12-22-93		
APPROVED: RAF	12-22-93		

DISTRIBUTION:

NOTES:

1. C STARCH COOKER PANEL (PLC) LOGIC.
2. ALL PANEL MOUNTED INSTRUMENTS ARE LOCATED IN/ON THE STARCH COOKER PANEL (61SCP) UNLESS OTHERWISE NOTED.
3. ALL INSTRUMENT TAG NUMBERS ON THIS DRAWING ARE PREFIXED WITH AREA NUMBER 641, UNLESS OTHERWISE NOTED.

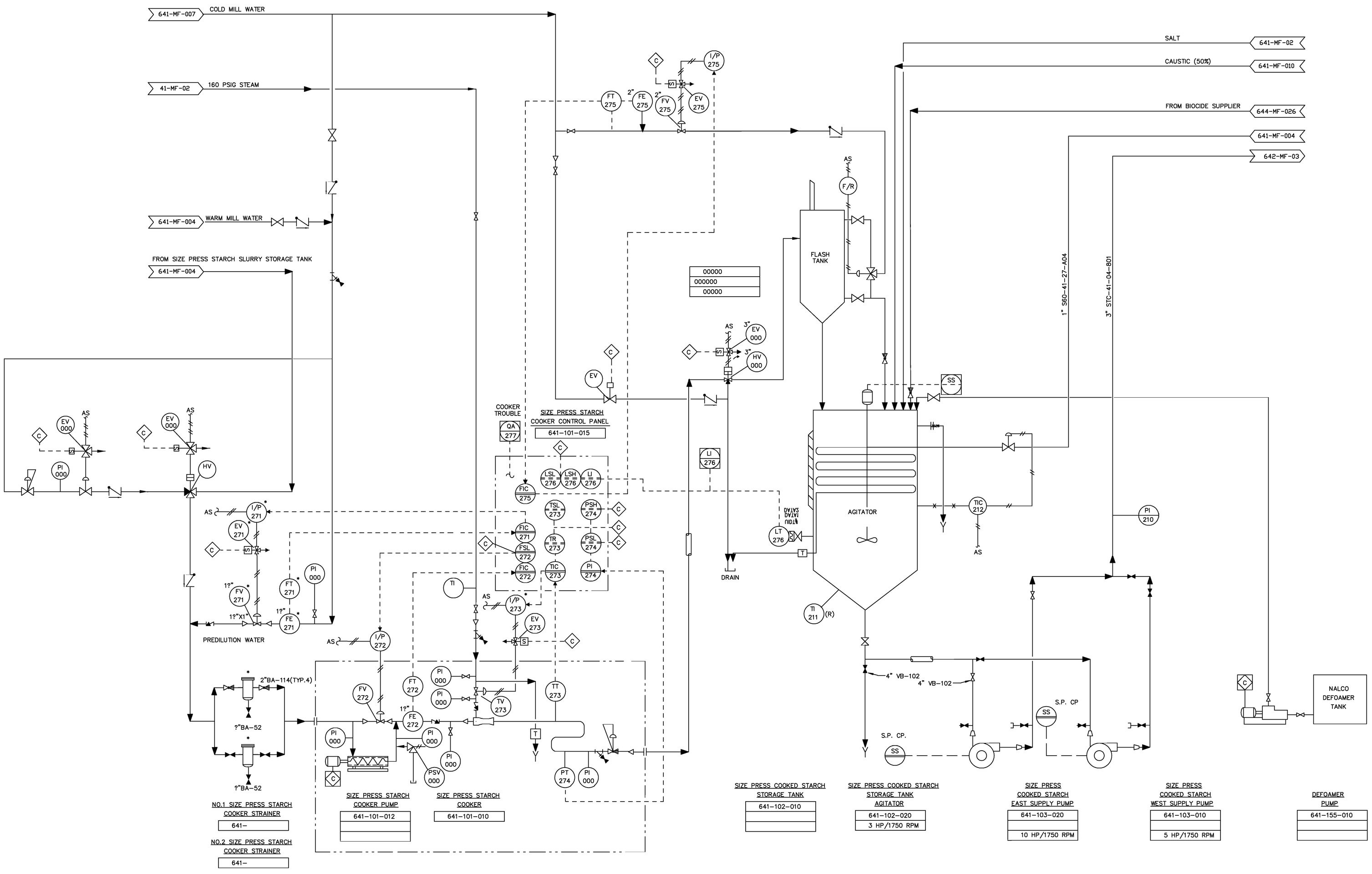

REV	DATE	DESCRIPTION	DRN	APP'D
2	10/98	Corrected sheet number	MFV	
1	5/98	61 PM DCS UPGRADE	MEF	

GEORGIA-PACIFIC
THE GROWTH COMPANY

COMMUNICATION PAPERS DIVISION
ASHDOWN OPERATIONS

CONSULTANT
APPLIED CONTROL TECHNOLOGY

TITLE:
ENGINEERING FLOW DIAGRAM
NO. 61 P.M. ADDITIVES
SIZE PRESS STARCH COOKING AND MACHINE SUPPLY

AFE NO. | PROJECT NO.

SCALE: NONE | DATE | DRAWING NO. | REV

DRAWN | CHECKED | APPROVED | APPROVED | DISTRIBUTION

641-MF-009 Sheet 2 of 2 | 2

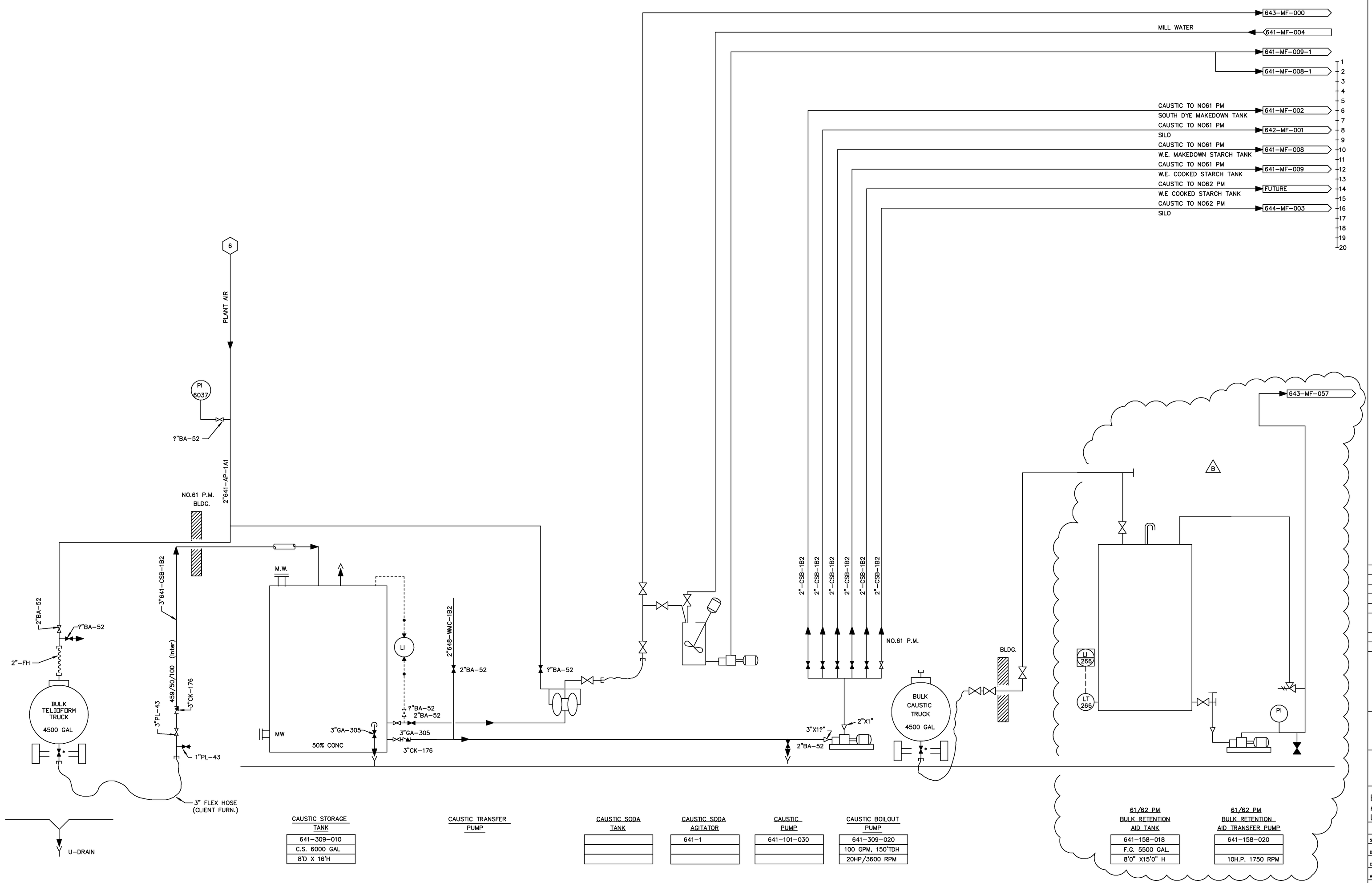

CAUSTIC STORAGE TANK
641-309-010
C.S. 6000 GAL
8'D X 16'H

CAUSTIC TRANSFER PUMP

CAUSTIC SODA TANK

CAUSTIC SODA AGITATOR
641-1

CAUSTIC PUMP
641-101-030

CAUSTIC BOILOUT PUMP
641-309-020
100 GPM, 150'TDH
20HP/3600 RPM

61/62 PM BULK RETENTION AID TANK
641-158-018
F.G. 5500 GAL.
8'0" X15'0" H

61/62 PM BULK RETENTION AID TRANSFER PUMP
641-158-020
10H.P. 1750 RPM

REV	DATE	DESCRIPTION	DRN	CHK'D	APP'D
B	11/09	SOUTH RET. AID TANK CONVERTED TO TELIDFORM BULK STORAGE TANK (DWG. 641-MF-019). NORTH RET. AID TANK RENAMED.	BJM		
A	5/98	61 PM DCS UPGRADE	ACT		

GEORGIA-PACIFIC
THE GROWTH COMPANY

COMMUNICATION PAPERS DIVISION
ASHDOWN OPERATIONS

CONSULTANT
APPLIED CONTROL TECHNOLOGY

TITLE:
ENGINEERING FLOW DIAGRAM
ADDITIVES-CAUSTIC & RETENTION AID
UNLOADING, STORAGE AND TRANSFER

AFE NO. AA-249

SCALE:	DATE	DRAWING NO.	REV
DRAWN F.D. Smith	11-30-95	641-MF-010	B
CHECKED			
APPROVED			
APPROVED			

DISTRIBUTION

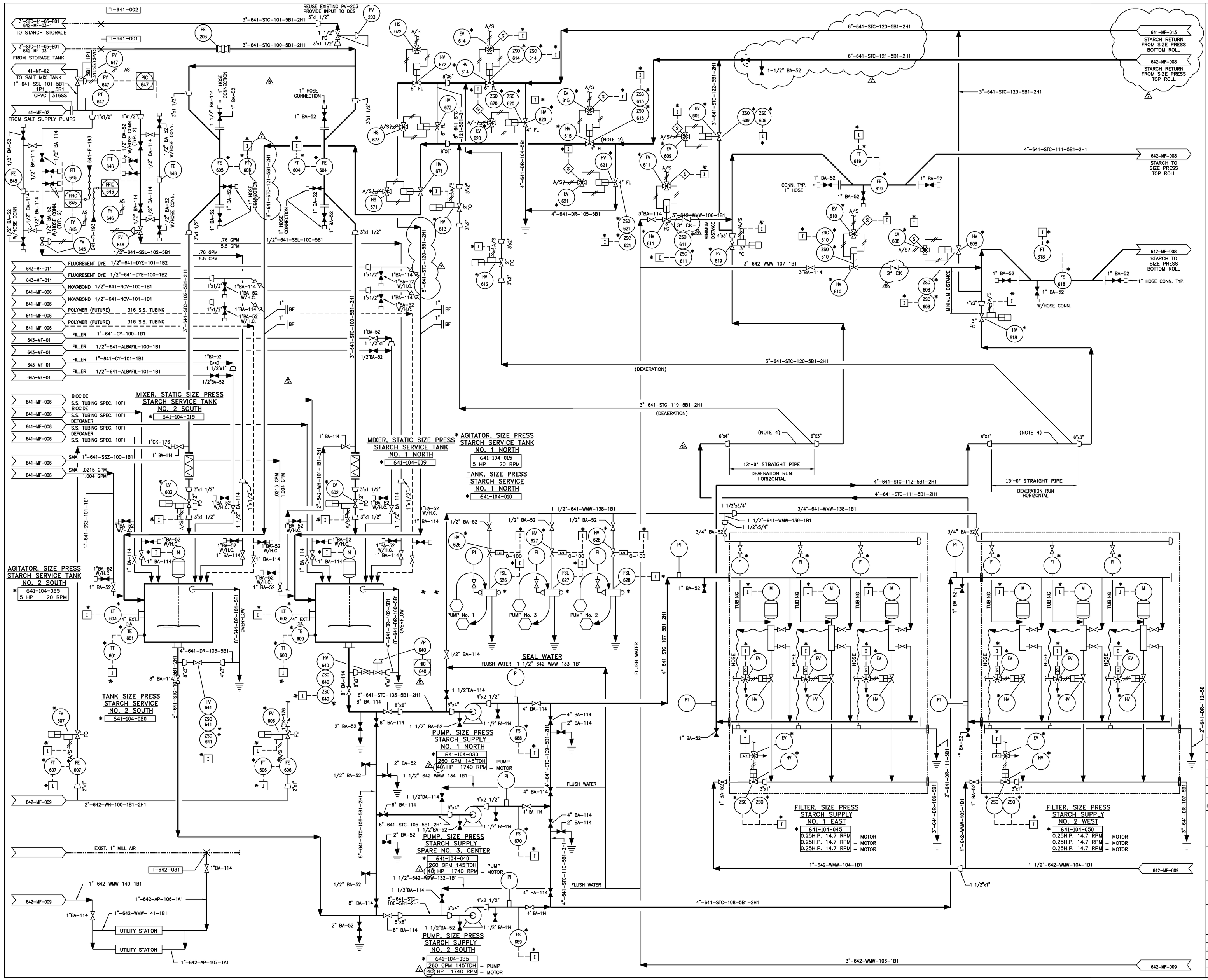

NOTES:

1. INSTRUMENT NUMBERS
   USED:
   SPARE:
2. DRAIN LINE SHALL BE NO FURTHER THAN ONE FOOT AWAY FROM CONTROL VALVE.
3. SEE VALMET DRAWINGS FOR DETAILS AND CONST. OF PNEUMATIC CIRCUITS.
4. CONNECTIONS NEED TO BE AT TOP OF PIPE FOR AIR REMOVAL PURPOSES. PIPE CONNECTIONS TO BE MADE AT 45° ANGLE.
5. SEE VALMET LOGIC FOR INTERLOCK LOGIC
6. * INDICATES VENDOR SUPPLIED.
7. PROVIDE LOW POINT DRAINS PIPED TO U-DRAIN.

REV	DATE	DESCRIPTION	DRWN	CO	CHKD
8	06/03/04	STARCH FILTER ADDITION-IFC	JGS		
7	02/02/04	FOR STARCH FILTER APPROVAL	DEB		
6	8/27/02	ADDED I/P 640	DHM		
5	12/29/98	REVISED TO AS-BUILT	MM		
4	12/08/98	SMA & STARCH FLOWS REVISED	MM		GC
3	11/24/98	REVISED AS SCOPED	MM		BN
2	10/28/98	REVISED AS SCOPED	RNE		CR
1	10/19/98	REVISED AS SCOPED	DER		CR
0	10/12/98	ISSUED FOR CONSTRUCTION	DER		CR

R-S-H ENGINEERING, INC.
MONROE, LA. TEL. (318)323-4009
www.rsheng.com FAX (318)387-4828
JOB NO: 12048 CAD FILE: MF011

Georgia-Pacific
THE GROWTH COMPANY

COMMUNICATION PAPERS DIVISION
ASHDOWN OPERATIONS

TITLE: 61 PM METERING SIZE PRESS ENGINEERING FLOW DIAGRAM STARCH SERVICE SYSTEM

SCALE: NONE	DATE	GP PROJ. NO.	
DRAWN: D. REMILLARD	7/9/98	DRAWING NO. 641-MF-011	REV 8
CHECKED:		SHEET OF	
APPROVED: D. McADAMS	8/12/98	AFE NO. AA-431	
APPROVED:			

PROCESS FLOW LEGEND:

FLOW RATE (GPM)/CONSISTENCY (%)/STOCK TONNAGE (BONE DRY TONS/DAY)/TEMP. (°F)/LINE PRESSURE (PSIG)

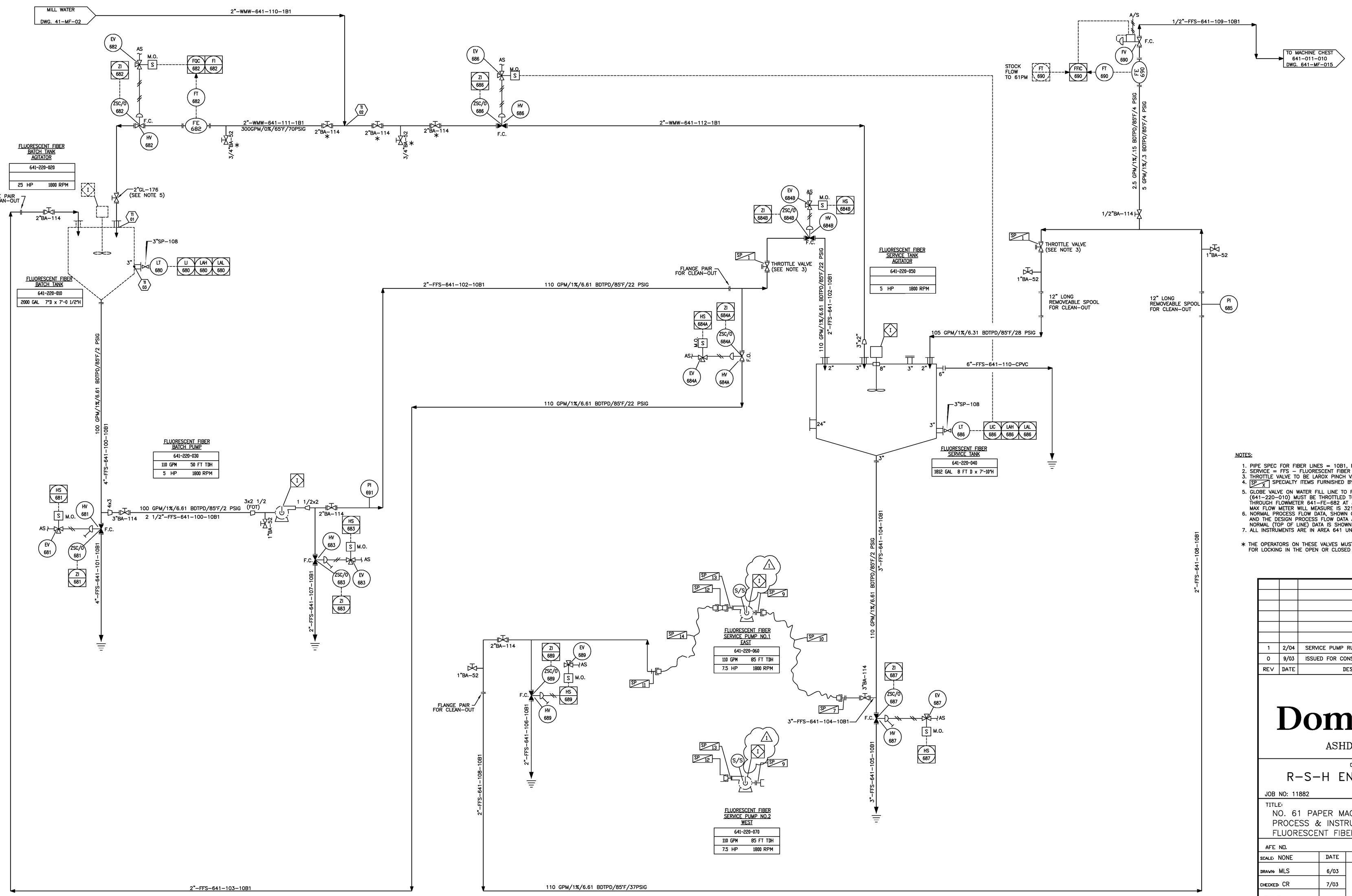

NOTES:

1. PIPE SPEC FOR FIBER LINES = 10B1, FOR 2" AND SMALLER USE 3 RADIUS BENDS.
2. SERVICE = FFS - FLUORESCENT FIBER STOCK
3. THROTTLE VALVE TO BE LAROX PINCH VALVE PVE 2M125-601L-SBR/T
4. SP SPECIALTY ITEMS FURNISHED BY CONTRACTOR.
5. GLOBE VALVE ON WATER FILL LINE TO FLOURESCENT FIBER BATCH TANK (641-220-010) MUST BE THROTTLED TO KEEP THE FLOW RATE THROUGH FLOWMETER 641-FE-682 AT 300 GPM, OR LOWER. MAX FLOW METER WILL MEASURE IS 321 GPM.
6. NORMAL PROCESS FLOW DATA, SHOWN ON THE TOP EACH LINE, AND THE DESIGN PROCESS FLOW DATA ARE THE SAME IF ONLY THE NORMAL (TOP OF LINE) DATA IS SHOWN.
7. ALL INSTRUMENTS ARE IN AREA 641 UNLESS OTHERWISE INDICATED.

* THE OPERATORS ON THESE VALVES MUST HAVE PROVISION FOR LOCKING IN THE OPEN OR CLOSED POSITION.

REV	DATE	DESCRIPTION	DRN. CH'D	AP'D
1	2/04	SERVICE PUMP RUN INDICATION IN DCS	DJM	
0	9/03	ISSUED FOR CONSTRUCTION	KRC	

Domtar

ASHDOWN MILL

CONSULTANT

R-S-H ENGINEERING, INC.

JOB NO: 11882 CAD FILE: 641-MF-012

TITLE:
NO. 61 PAPER MACHINE
PROCESS & INSTRUMENTATION DIAGRAM
FLUORESCENT FIBER SYSTEM

AFE NO. PROJECT NO. ASHC00680

SCALE: NONE	DATE	DRAWING NO.	
DRAWN: MLS	6/03	641-MF-012	1
CHECKED: CR	7/03		
APPROVED:			
APPROVED:			
DISTRIBUTION:			

1:1

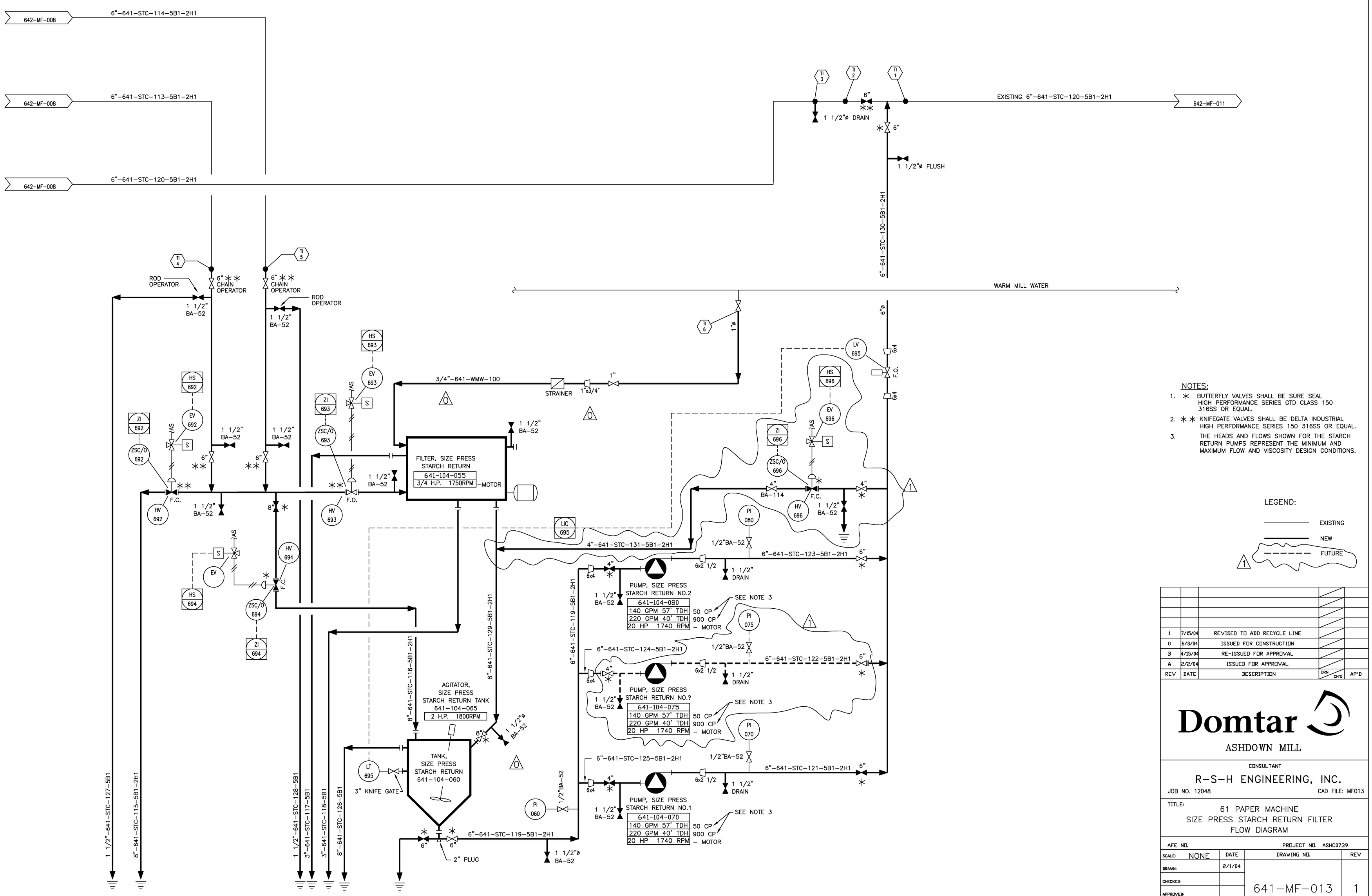

NOTES:

1. ✱ BUTTERFLY VALVES SHALL BE SURE SEAL HIGH PERFORMANCE SERIES GTD CLASS 150 316SS OR EQUAL.
2. ✱✱ KNIFEGATE VALVES SHALL BE DELTA INDUSTRIAL HIGH PERFORMANCE SERIES 150 316SS OR EQUAL.
3. THE HEADS AND FLOWS SHOWN FOR THE STARCH RETURN PUMPS REPRESENT THE MINIMUM AND MAXIMUM FLOW AND VISCOSITY DESIGN CONDITIONS.

LEGEND:

EXISTING
NEW
FUTURE

REV	DATE	DESCRIPTION	DRN	CH'D	AP'D
1	7/15/04	REVISED TO ADD RECYCLE LINE			
0	6/3/04	ISSUED FOR CONSTRUCTION			
B	4/15/04	RE-ISSUED FOR APPROVAL			
A	2/2/04	ISSUED FOR APPROVAL			

Domtar

ASHDOWN MILL

CONSULTANT

R-S-H ENGINEERING, INC.

JOB NO. 12048 CAD FILE: MF013

TITLE: 61 PAPER MACHINE SIZE PRESS STARCH RETURN FILTER FLOW DIAGRAM

AFE NO. PROJECT NO. ASHC0739

SCALE: NONE	DATE	DRAWING NO.	REV
DRAWN:	2/1/04	641-MF-013	1
CHECKED:			
APPROVED:			
APPROVED:			
DISTRIBUTION:			

PLOT SCALE 1=1

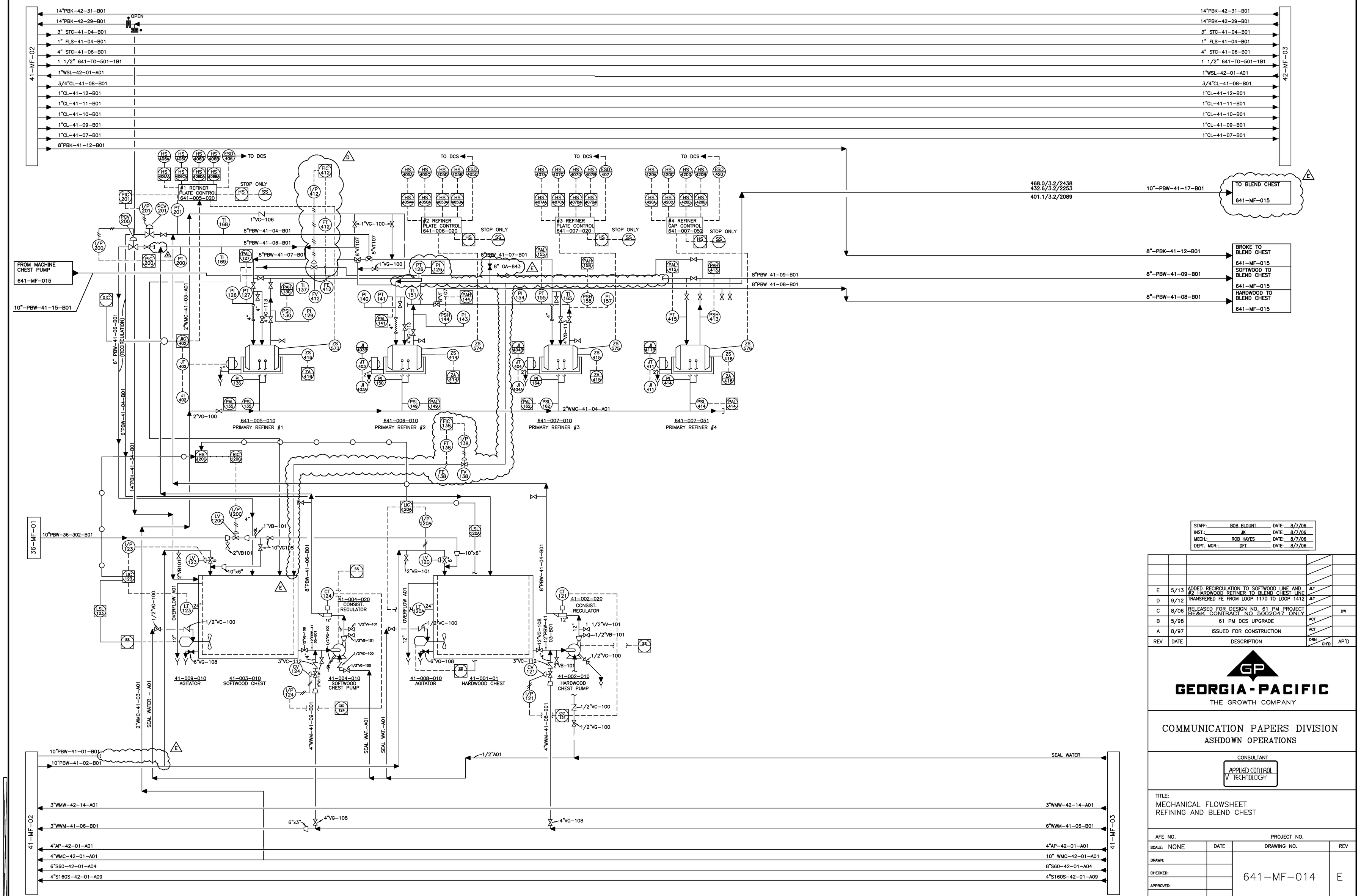

STAFF:	BOB BLOUNT	DATE: 8/7/06
INST.:	JK	DATE: 8/7/06
MECH.:	ROB HAYES	DATE: 8/7/06
DEPT. MGR.:	DFT	DATE: 8/7/06

REV	DATE	DESCRIPTION	DRN / CH'D	AP'D
E	5/13	ADDED RECIRCULATION TO SOFTWOOD LINE AND #2 HARDWOOD REFINER TO BLEND CHEST LINE	JLT	
D	9/12	TRANSFERED FE FROM LOOP 1170 TO LOOP 1412	JLT	
C	8/06	RELEASED FOR DESIGN NO. 61 PM PROJECT BESOK CONTRACT NO. 5002047 ONLY		DW
B	5/98	61 PM DCS UPGRADE	ACT	
A	8/97	ISSUED FOR CONSTRUCTION	ACT	

GEORGIA-PACIFIC
THE GROWTH COMPANY

COMMUNICATION PAPERS DIVISION
ASHDOWN OPERATIONS

CONSULTANT
APPLIED CONTROL TECHNOLOGY

TITLE:
MECHANICAL FLOWSHEET
REFINING AND BLEND CHEST

AFE NO.		PROJECT NO.	
SCALE: NONE	DATE	DRAWING NO.	REV
DRAWN:		641-MF-014	E
CHECKED:			
APPROVED:			
APPROVED:			
DISTRIBUTION:			

DATE: REVISED BY:

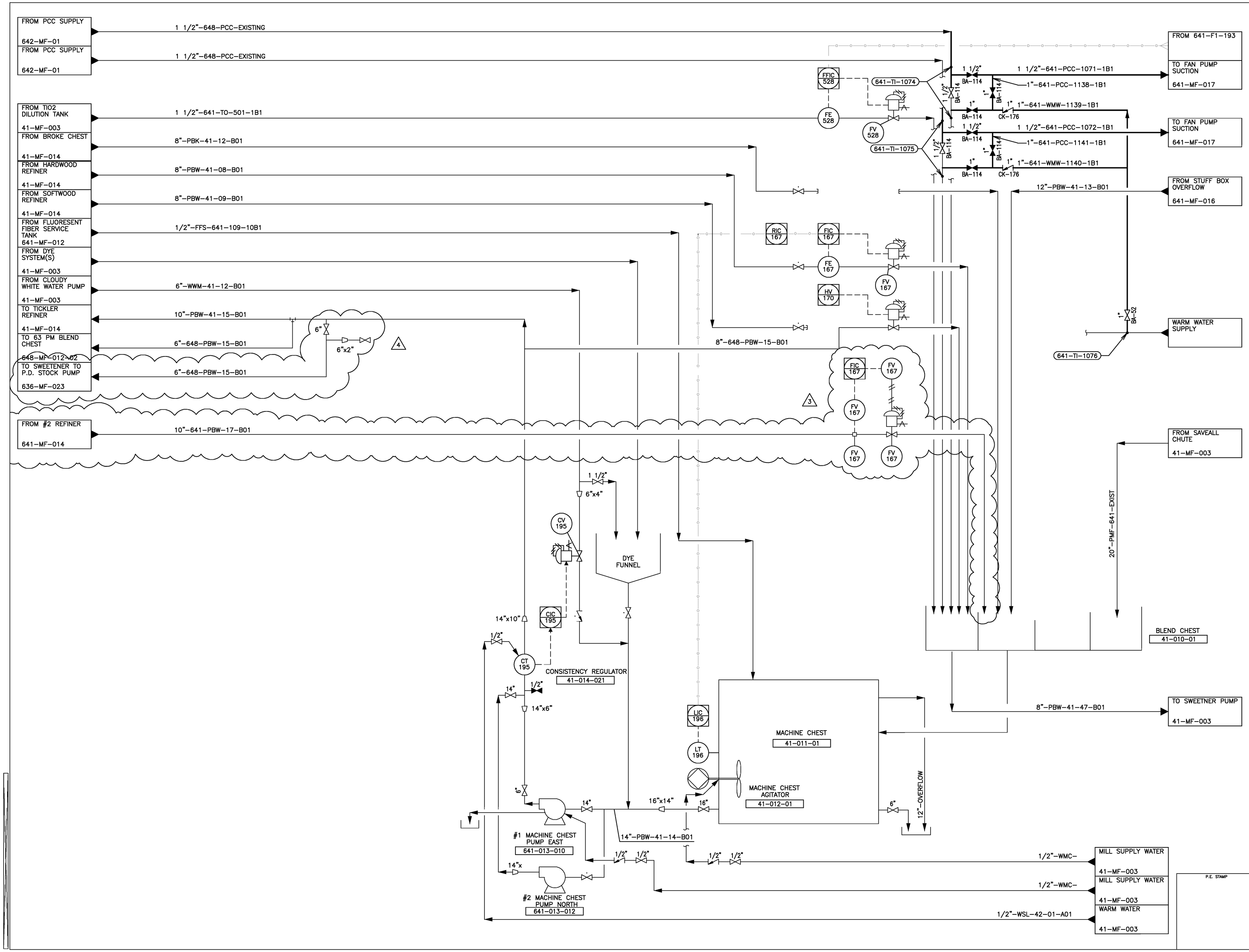

NOTES:

1. INSULATE PER SPECIFICATION 100-D-081-012.

2. ALL INSTRUMENT TAG NUMBERS ON THIS DRAWING ARE PREFIXED WITH AREA NUMBER 641, UNLESS OTHERWISE NOTED.

LEGEND:

VENDOR SUPPLIED INSTRUMENT

FLOW LEGEND:

BDTPD/%DS/GPM MAXIMUM
BDTPD/%DS/GPM DESIGN
BDTPD/%DS/GPM MINIMUM

STAFF: _____ DATE: _____
INST.: _____ DATE: _____
MECH.: _____ DATE: _____
DEPT. MGR.: _____ DATE: _____

REV	DATE	DESCRIPTION	DRN	CO	AP'D
4	1/14	LINE FROM MACH. CHST PMP TO SWTNR PMP	JLT		
3	5/13	ADDED #2 REFINER TO BLEND CHEST LINE	JLT		
2	9/12	REMOVED LOOP 1171 AND FE FROM 1170	JLT		
1	8/06	RELEASED FOR DESIGN - REDUCED SCOPE			DW
1	8/06	REVISED VALVE CALLOUT			DW
0	7/06	RELEASED FOR DESIGN	WB		DW

BE&K ENGINEERING CO. BIRMINGHAM, ALABAMA FOR

BE&K CONTRACT NO. 5002047

Domtar

COMMUNICATION PAPERS DIVISION
ASHDOWN MILL

No. 61 PAPER MACHINE
PROCESS & INSTRUMENTATION DIAGRAM
BLEND CHEST AND MACHINE CHEST

P.E. STAMP

AR NO. | PROJECT NO.
SCALE: NONE | DATE | DRAWING NO. | REV
DRAWN:
CHECKED:
APPROVED:
APPROVED:

641-MF-015 | 4
SHEET 1 OF 1

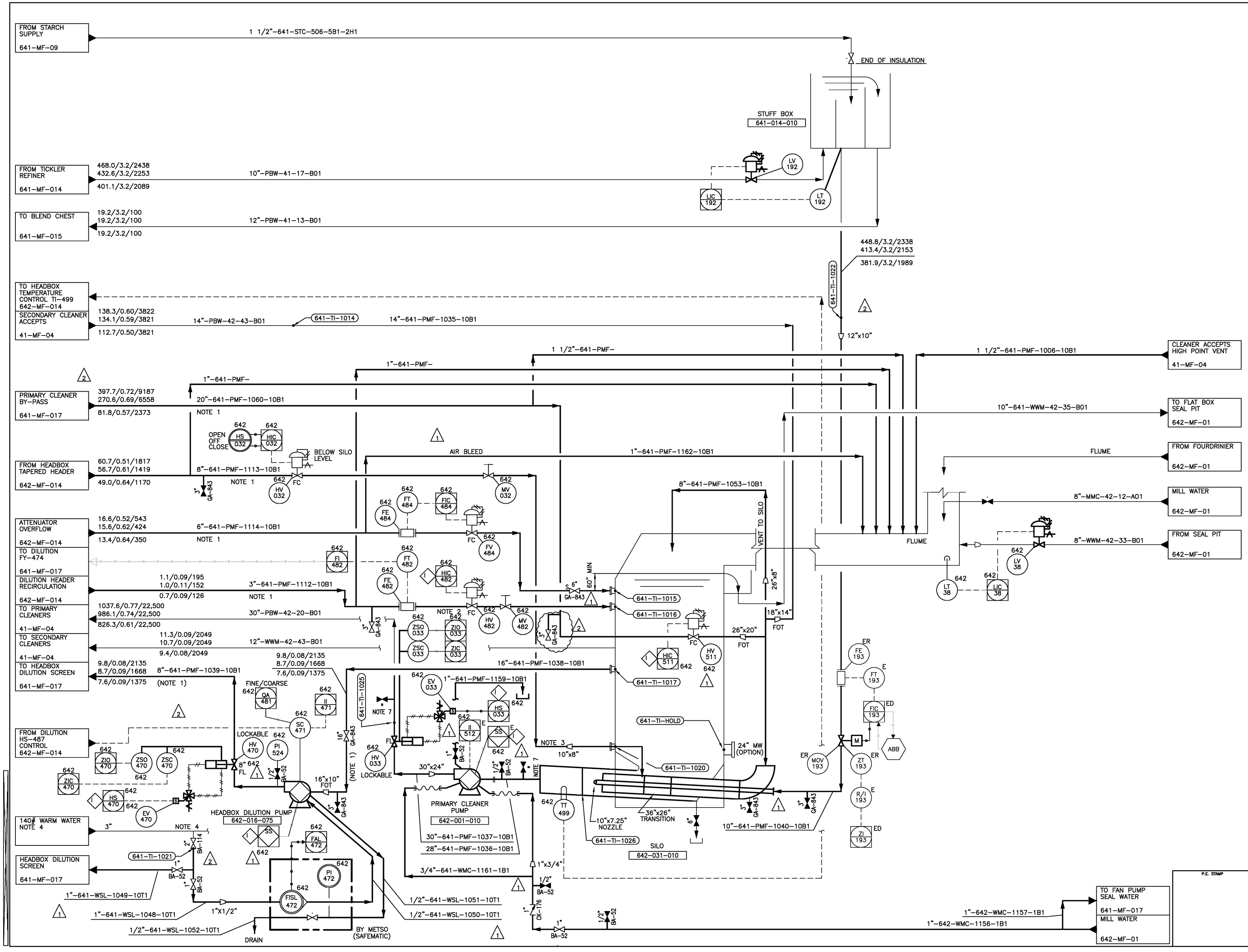

NOTES:

1. SLOPE UP IN DIRECTION OF FLOW PER METSO PIPING INSTRUCTIONS.
2. MINIMUM 10D STRAIGHT PIPE BEFORE AND AFTER HV-482.
3. REDUCER ORIENTATION PER METSO PIPING INSTRUCTIONS.
4. SEAL WATER PRESSURE REQUIRED = 125 PSI.
5. NOT USED.
6. INSULATE PER SPECIFICATION 100-D-081-012.
7. SENSODEC PRESSURE PULSATION MEASUREMENT CONNECTION WITH VALVE AND PLUG SUPPLED BY METSO.
8. ALL INSTRUMENT TAG NUMBERS ON THIS DRAWING ARE PREFIXED WITH AREA NUMBER 641, UNLESS OTHERWISE NOTED.

LEGEND:

VENDOR SUPPLIED INSTRUMENT

FLOW LEGEND:

BDTPD/%DS/GPM	MAXIMUM
BDTPD/%DS/GPM	DESIGN
BDTPD/%DS/GPM	MINIMUM

STAFF:	BOB BLOUNT	DATE: 8/7/06
INST.:	JK	DATE: 8/7/06
MECH.:	ROB HAYES	DATE: 8/7/06
DEPT. MGR.:	DFT	DATE: 8/7/06

REV	DATE	DESCRIPTION	DRN	CO	AP'D
1	8/06	REV VALVE CALLOUTS			DW
1	8/06	RFD - REDUCED SCOPE, REV PIPE & INSTR			DW
0	7/06	RELEASED FOR DESIGN	WB		DW

BE&K ENGINEERING CO. BIRMINGHAM, ALABAMA FOR

BE&K CONTRACT NO. 5002047

Domtar

COMMUNICATION PAPERS DIVISION
ASHDOWN MILL

No 61 PAPER MACHINE
P & I DIAGRAM - SILO, DEAERATOR & PRIMARY CLEANER PUMP

P.E. STAMP

AR NO.		PROJECT NO.	
SCALE: NONE	DATE	DRAWING NO.	REV
DRAWN: DJT		641-MF-016	1
CHECKED:		SHEET 1 OF 1	
APPROVED:			
APPROVED:			

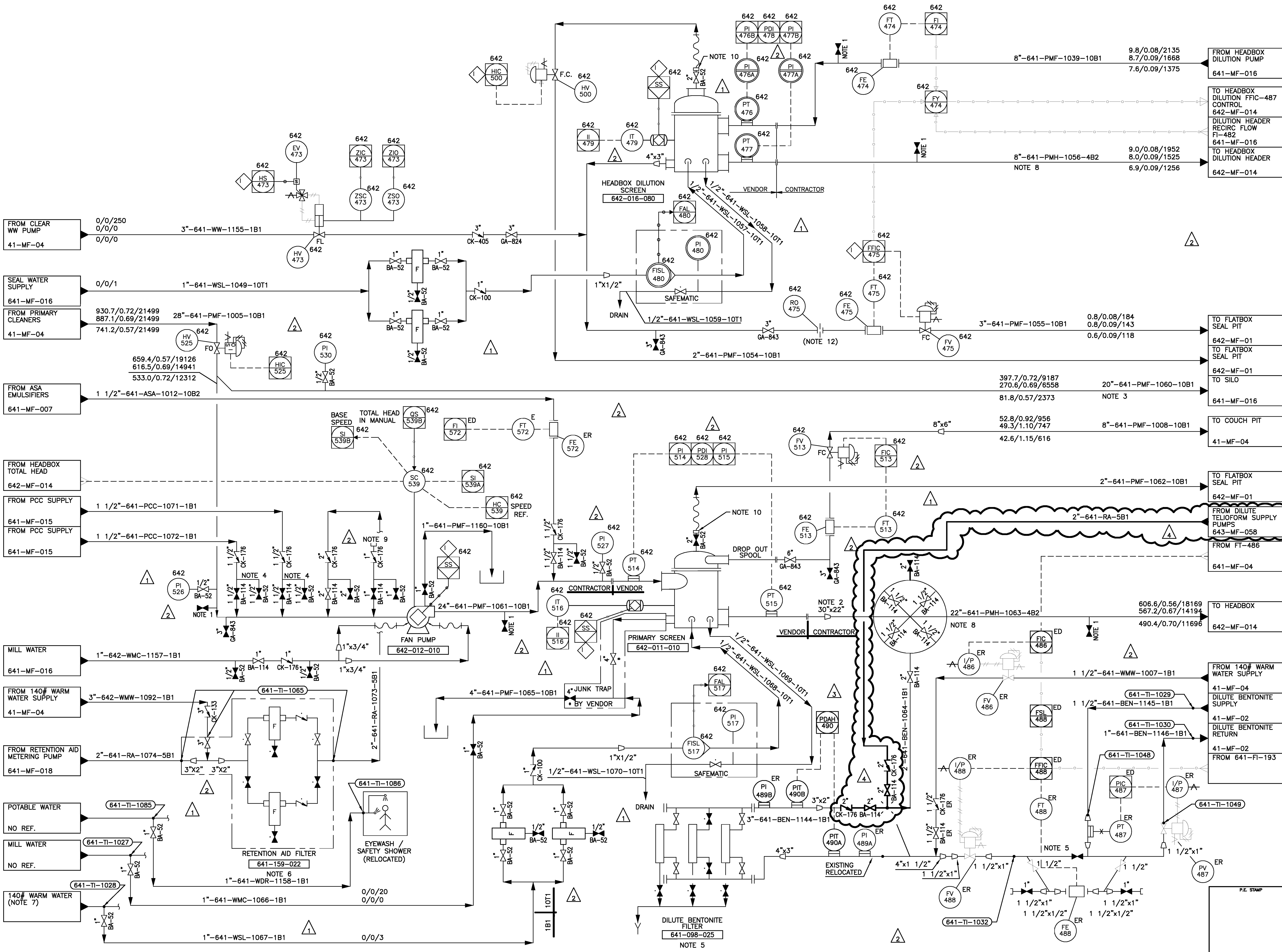

NOTES:

1. SENSODEC PRESSURE PULSATION MEASUREMENT CONNECTION WITH VALVE AND PLUG SUPPLIED BY METSO.
2. REDUCER ORIENTATION PER METSO PIPING INSTRUCTIONS.
3. SLOPE UP IN DIRECTION OF FLOW PER METSO PIPING INSTRUCTIONS.
4. SECONDARY PCC ADDITION POINT, PRIMARY ADDITION POINT TO BLEND CHEST / MACHINE CHEST.
5. BENTONITE FILTER, FIELD INSTRUMENTS AND PIPING LOCATED ON GROUND FLOOR NEAR PRIMARY SCREEN ADDITION POINT.
6. RELOCATE RETENTION AID FILTER TO AREA NEAR FAN PUMP ADDITION POINT.
7. SEAL WATER PRESSURE REQUIRED > 85 PSI.
8. ELECTROPOLISH PIPE FINISH, FIELD WELDS COTTONBALL FINISH, METAL TO METAL FLANGES.
9. DEFOAMER ADDITION POINT (IF REQUIRED).
10. CAMLOCK TYPE QUICK DISCONNECT.
11. ALL INSTRUMENT TAG NUMBERS ON THIS DRAWING ARE PREFIXED WITH AREA NUMBER 641, UNLESS OTHERWISE NOTED.
12. TEN DIAMETERS MINIMUM PIPE LENGTH. (2)

LEGEND:

VENDOR SUPPLIED INSTRUMENT

FLOW LEGEND:

BDTPD/%DS/GPM MAXIMUM
BDTPD/%DS/GPM DESIGN
BDTPD/%DS/GPM MINIMUM

STAFF:	BOB BLOUNT	DATE:	11/29/06
INST.:	JK	DATE:	11/29/06
MECH.:	ROB HAYES	DATE:	11/29/06
DEPT. MGR.:	DFT	DATE:	11/29/06

REV	DATE	DESCRIPTION	DRN / CO	AP'D
4	11/13/09	TELIOFORM ADDITION AFTER PRIMARY SCRN.	DJM / DOM	
3	11/29/06	AS BUILT REVISION	RAH	DW
2		GENERAL REVISION	RAH	DW
1	8/6/06	REV VALVES, SCREEN VENT, & INSTR		DW
0	7/06	RELEASED FOR DESIGN	WB	DW

BE&K ENGINEERING CO. BIRMINGHAM, ALABAMA FOR

BE&K CONTRACT NO. 5002047

Domtar

COMMUNICATION PAPERS DIVISION
ASHDOWN MILL

NO. 61 PAPER MACHINE
PROCESS & INSTRUMENTATION DIAGRAM
PRIMARY & HEADBOX DILUTION SCREEN

P.E. STAMP

AR NO.		PROJECT NO.	
SCALE: NONE	DATE	DRAWING NO.	REV
DRAWN: DJT		641-MF-017 SHEET 1 OF 1	4
CHECKED:			
APPROVED:			
APPROVED:			

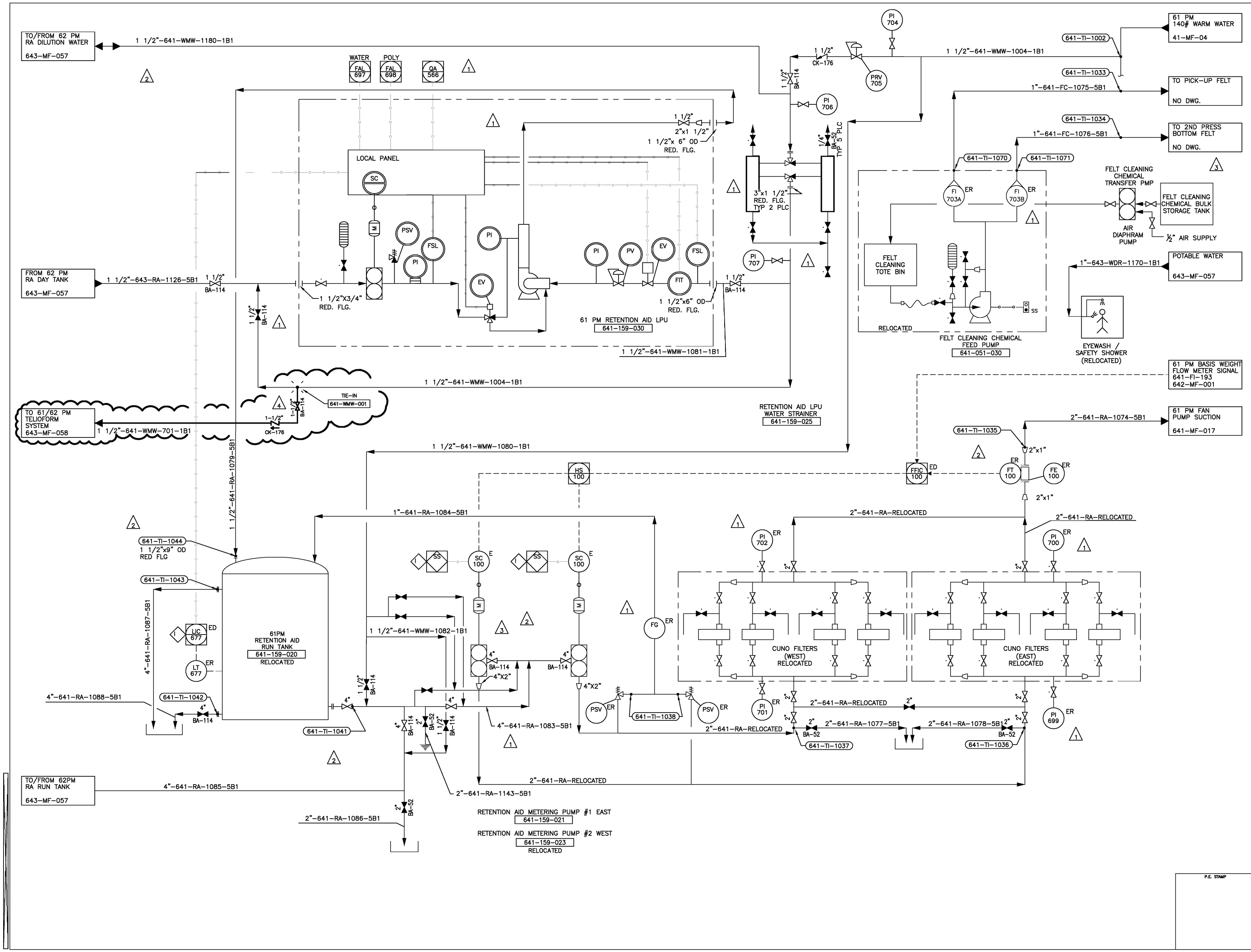

NOTES:

1. ALL INSTRUMENT TAG NUMBERS ON THIS DRAWING ARE PREFIXED WITH AREA NUMBER 641, UNLESS OTHERWISE NOTED.

LEGEND:

VENDOR SUPPLIED INSTRUMENT

FLOW LEGEND:

BDTPD/%DS/GPM	MAXIMUM
BDTPD/%DS/GPM	DESIGN
BDTPD/%DS/GPM	MINIMUM

STAFF:	BOB BLOUNT	DATE: 11/29/06
INST.:	JK	DATE: 11/29/06
MECH.:	ROB HAYES	DATE: 11/29/06
DEPT. MGR.:	DFT	DATE: 11/29/06

REV	DATE	DESCRIPTION	DRN	CO	AP'D
4	10/2/09	WATER TIE-IN FOR TELIOFORM RET. AID	DJM	DOM	
3	11/29/06	AS BUILT REVISION	RAH		DW
2		RA FILTER ADDITION	RAH		DW
1	08/06	REV INSTR. & PIPING			DW
0	7/06	RELEASED FOR DESIGN	WB		DW

BE&K ENGINEERING CO. BIRMINGHAM, ALABAMA FOR

BE&K CONTRACT NO. 5002047

Domtar

COMMUNICATION PAPERS DIVISION
ASHDOWN MILL

NO. 61 PAPER MACHINE
PROCESS & INSTRUMENTATION DIAGRAM
RETENTION AID SYSTEM

P.E. STAMP

AR NO.		PROJECT NO.	
SCALE: NONE	DATE	DRAWING NO.	REV
DRAWN:		641-MF-018	4
CHECKED:			
APPROVED:			
APPROVED:			

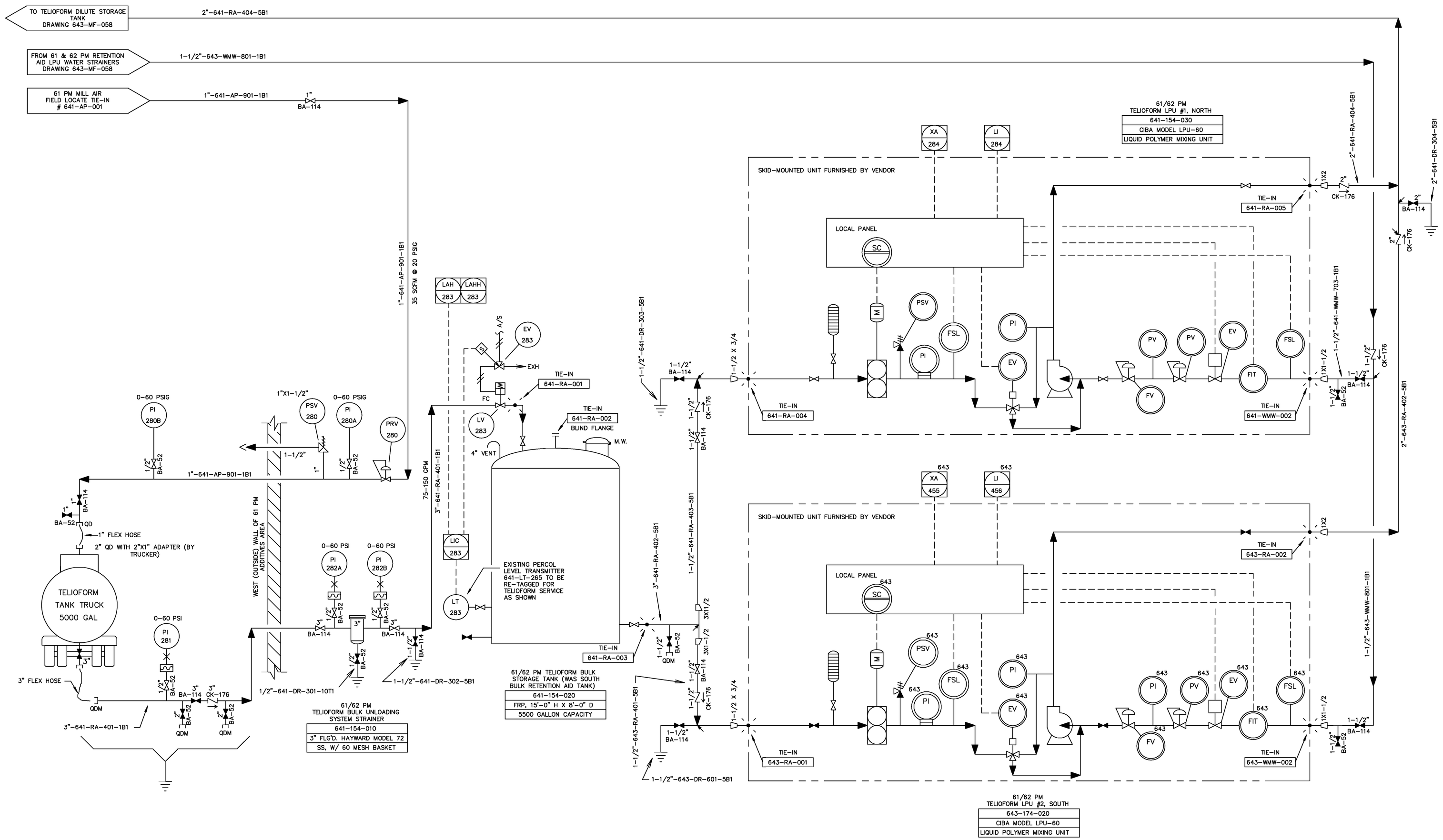

NOTES

1 ALL INSTRUMENT LOOP NUMBERS SHALL HAVE PREFIX 641, EXCEPT WHERE SHOWN OTHERWISE

LEGEND

- INSTRUMENT FURNISHED BY VENDOR
- PIPING TIE-IN POINT
- QDM — MALE HALF OF QUICK-DISCONNECT FITTING
- QDF — FEMALE HALF OF QUICK-DISCONNECT FITTING
- PROCESS SEWER
- NEW DOMTAR-FURNISHED OBJECT
- NEW VENDOR-FURNISHED OBJECT
- EXISTING OBJECT

REFERENCE DRAWINGS

610-MF-001
610-MF-002
610-MF-003
643-MF-058

REV	DATE	DESCRIPTION	DRN	CO	AP'D
A	11/3/09	ISSUED FOR APPROVAL	DJM	DOM	

Domtar

DOMTAR CORPORATION
ASHDOWN MILL

NO. 61 & 62 PAPER MACHINES
PROCESS & INSTRUMENTATION DIAGRAM
TELIOFORM BULK STG. & LPU SYSTEMS

AR NO.		PROJECT NO.	
SCALE: NONE	DATE	DRAWING NO.	REV
DRAWN: DJM	11/3/09	641-MF-019	A
CHECKED:		SHEET 1 OF 1	
APPROVED:			
APPROVED:			

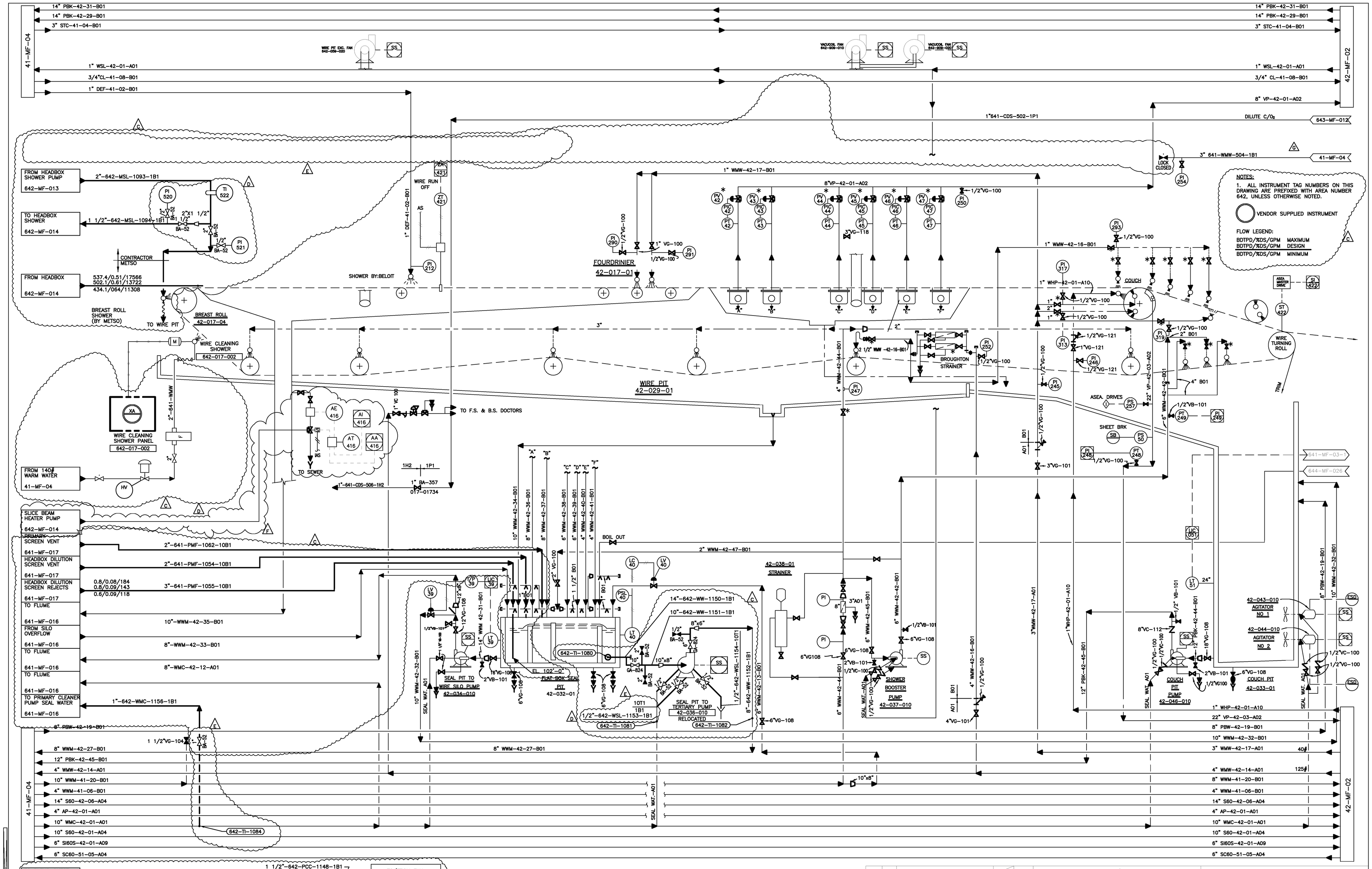

NOTES:

1. ALL INSTRUMENT TAG NUMBERS ON THIS DRAWING ARE PREFIXED WITH AREA NUMBER 642, UNLESS OTHERWISE NOTED.

VENDOR SUPPLIED INSTRUMENT

FLOW LEGEND:

BDTPD/%DS/GPM	MAXIMUM
BDTPD/%DS/GPM	DESIGN
BDTPD/%DS/GPM	MINIMUM

REV	DATE	DESCRIPTION	DRN	CH'D	AP'D
F	4/08	REPLACED KAJAANI RM3-LOOP 416	PSH		
E		RELEASED FOR DESIGN - GENERAL REVISION BE&K CONTRACT NO 5002047 ONLY			
D	8/06	RELEASED FOR DESIGN - REDUCED SCOPE BE&K CONTRACT NO 5002047 ONLY		DW	
C	6/06	RELEASED FOR DESIGN NO. 61 PM PROJECT BE&K CONTRACT NO 5002047 ONLY	RB	DW	
B	5/98	AS BUILT	ACT		
A	8/97	61 PM DCS UPGRADE	ACT		

STAFF: DATE:
INST.: DATE:
MECH.: DATE:
DEPT. MGR.: DATE:

GEORGIA-PACIFIC
THE GROWTH COMPANY

COMMUNICATION PAPERS DIVISION
ASHDOWN OPERATIONS

CONSULTANT
APPLIED CONTROL TECHNOLOGY

TITLE: MECHANICAL FLOWSHEET FOURDRINIER

AFE NO. | PROJECT NO.
SCALE: | DATE | DRAWING NO. | REV.
DRAWN:
CHECKED:
APPROVED:
APPROVED:
DISTRIBUTION:

642-MF-001 F

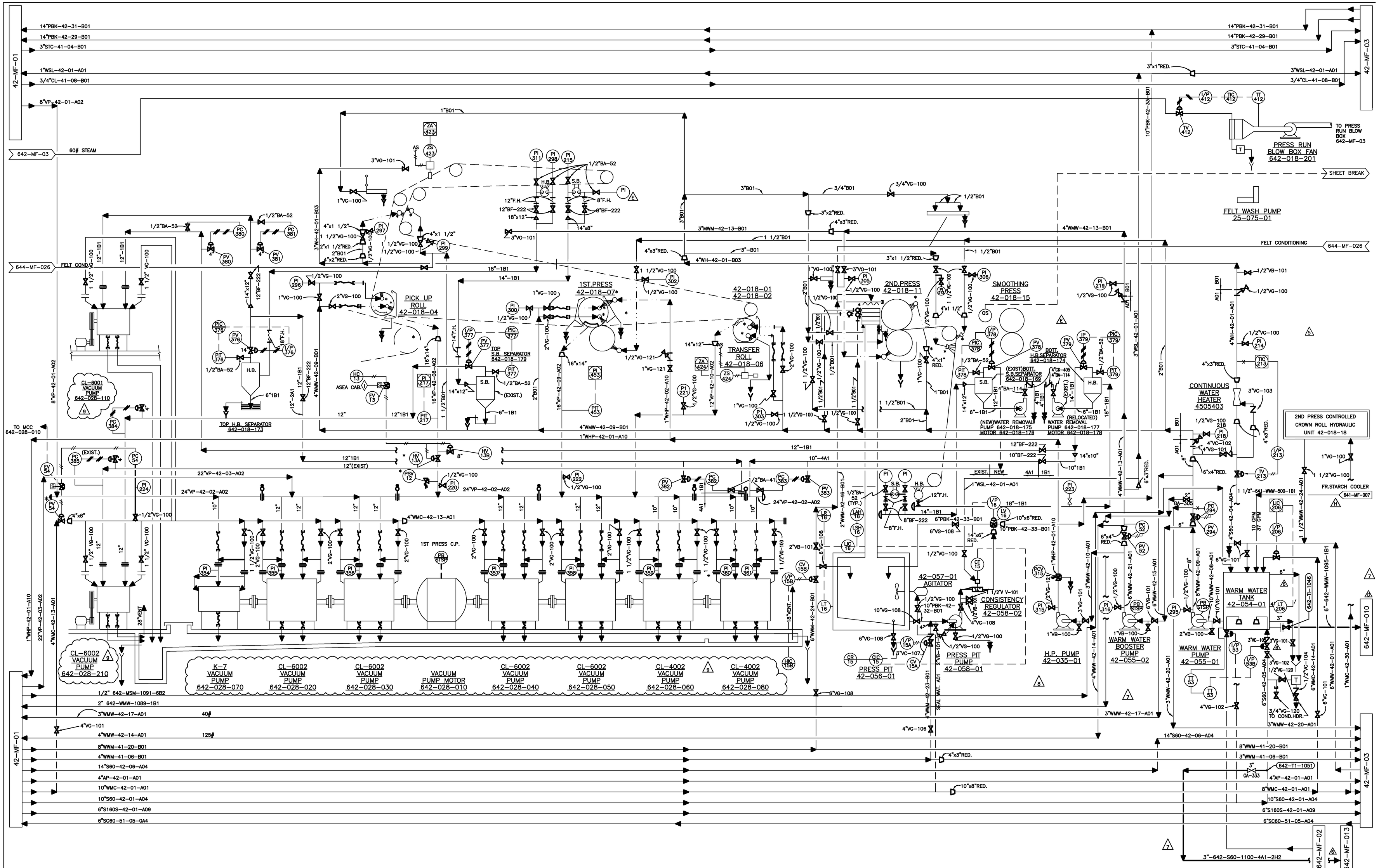

9	5/09	CORRECTED VACUUM PUMP EQUIPMENT AND MODEL NUMBERS	SAM	
8	8/08	ADDED WIRE CLEANING SHOWER PUMP SUPPLY AND BYPASS RETURN TO WARM WATER TANK	SAM	
7	6/8/06	RELEASED FOR DESIGN NO. 61 PM PROJECT BE&K CONTRACT NO 5002047 ONLY	SAM	WB
6	8/02	REV. WW TANK TEMP. & LVL. LOOPS	SAM	
5	09/01	ADDED TIC-213 TO DCS	JMJ	
D	6/99	CHANGED TIE-IN NUMBER	RHE	
C	2/99	ADDED LOOP 642-453	AMH	
B	11/98	SHOWER WATER PIPING	MM	DB
A	5/98	61 PM DCS UPGRADE	ACT	
			NRW	

STAFF:	BOB BLOUNT	DATE: 8/7/06
INST.:	JK	DATE: 8/7/06
MECH.:	ROB HAYES	DATE: 8/7/06
DEPT. MGR.:	DFT	DATE: 8/07/06

GEORGIA-PACIFIC
THE GROWTH COMPANY

COMMUNICATION PAPERS DIVISION
ASHDOWN OPERATIONS

CONSULTANT
APPLIED CONTROL TECHNOLOGY

TITLE:
MECHANICAL FLOWSHEET
PRESS & VACUUM

AFE NO.		PROJECT NO.	
SCALE:	DATE	DRAWING NO.	REV
DRAWN:		642-MF-002	9
CHECKED:			
APPROVED:			
APPROVED:			

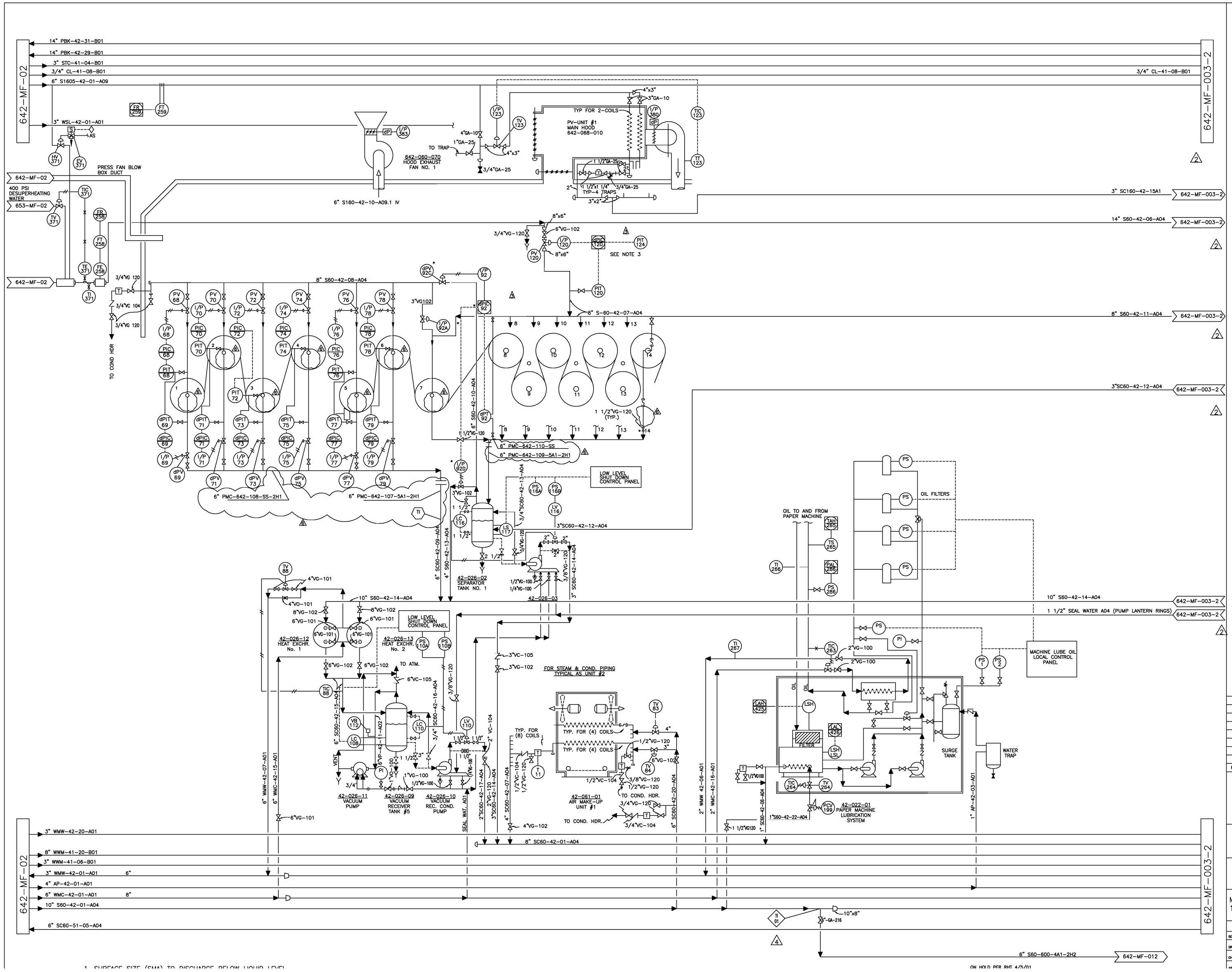

1. SURFACE SIZE (SMA) TO DISCHARGE BELOW LIQUID LEVEL

ON HOLD PER RHT 4/5/01

RELEASED FOR CONSTRUCTION
BY J.C. DATE 11/02/00

NOTE: CONTRACTOR TO PERFORM ONLY INSTALLATION INDICATED IN REVISION NUMBER 5. CONTRACTOR TO DISREGARD ALL OTHER NOTES AND REVISIONS ON THIS DRAWING.

MARTECH ENGINEERING, INC.

REV	DATE	DESCRIPTION	DRN	CKD	AP'D
6	10/08	RSH MODIFIED FOR ASCH0660	GED		
5	11/00	RELEASED FOR CONSTRUCTION	BG	AJ	JC
4	10/00	PRELIMINARY REVIEW ONLY	DV		
3	8/99	Changed loop to DCS	CG		JWM
2	10/98	Corrected sheet numbers	HH		
1	5/16	61 PM DCS UPGRADE	ACI		

GEORGIA-PACIFIC
THE GROWTH COMPANY

COMMUNICATION PAPERS DIVISION
ASHDOWN OPERATIONS

CONSULTANT
APPLIED CONTROL TECHNOLOGY

TITLE:
MECHANICAL FLOWSHEET
1ST & 2ND DRYER SECTIONS

AFE NO. | PROJECT NO.
SCALE: | DATE | DRAWING NO. | REV
DRAWN: | 642-MF-003 | 6
CHECKED: | Sheet 1 of 2
APPROVED:

PLOT DATE:

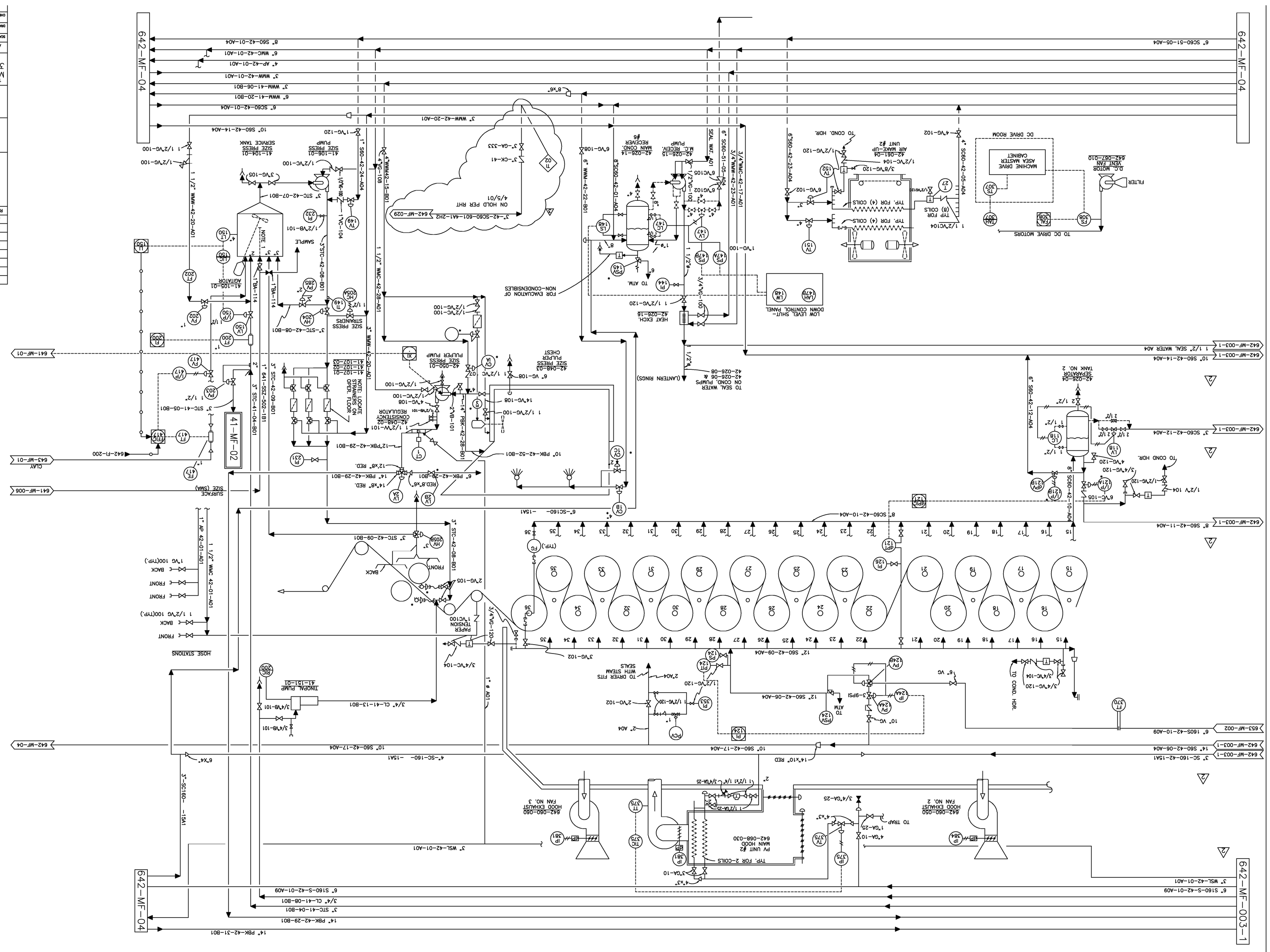

ARE NO.	PROJECT NO.		
SCALE	DATE	DRAWING NO.	REV
DRAWN		642-MF-003	4
CHECKED			

TITLE
MECHANICAL FLOWSHEET
3RD DRYER SECTION

CONSULTANT
APPLIED CONTROL TECHNOLOGY

COMMUNICATION PAPERS DIVISION
ASHDOWN OPERATIONS

GEORGIA-PACIFIC
THE GROWTH COMPANY

REV	DATE	DESCRIPTION	DWN	CHKD	APPD
A	3/98	61 PM DCS UPGRADE	MT		
2	10/98	Corrected sheet #s	MW		
3	10/00	PRELIMINARY REVIEW ONLY	GV		
4	11/00	RELEASED FOR CONSTRUCTION	BG	JC	JC

RELEASED FOR CONSTRUCTION
BY J.C. DATE 11/02/00
NOTE: CONTRACTOR TO PERFORM ONLY INSTALLATION NOCHANGES IN REVISION NUMBER 4 CONTRACTOR TO PROCEED AT OTHER NOTES AND REVISIONS ON THIS DRAWING.

McFarlan Engineering Inc.

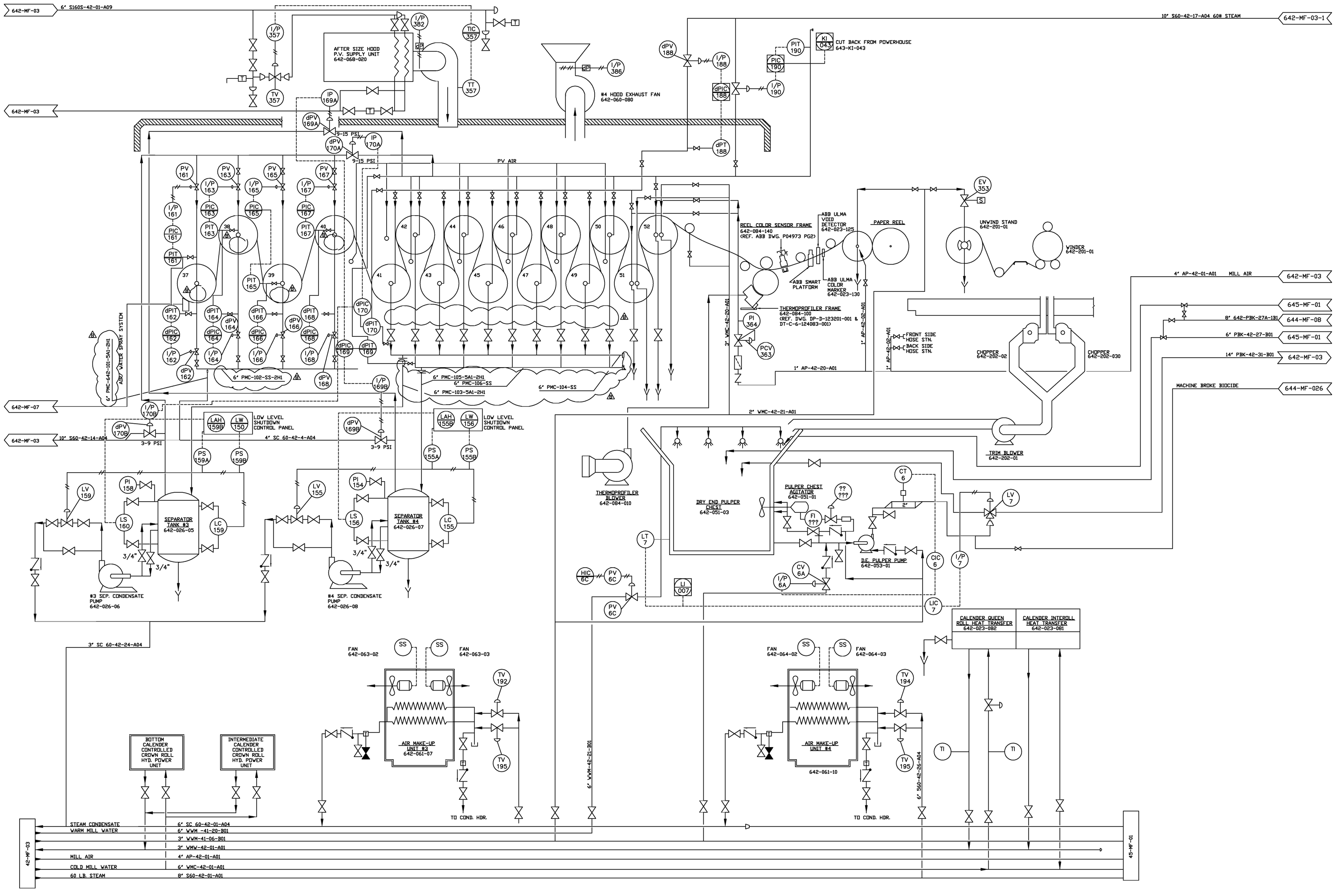

REV	DATE	DESCRIPTION	DRN CHK'D	AP'D
B	10/8	RSH CHANGES FOR ASCH0660	GEO	
A	5/98	61 PM DCS UPGRADE	MCF	

GEORGIA-PACIFIC
THE GROWTH COMPANY

COMMUNICATION PAPERS DIVISION
ASHDOWN OPERATIONS

CONSULTANT
APPLIED CONTROL TECHNOLOGY

TITLE:
MECHANICAL FLOWSHEET
4TH DRYER SECT & REEL MACHINE

AFE NO.		PROJECT NO.	
SCALE:	DATE	DRAWING NO.	REV
DRAWN		642-MF-004	B
CHECKED			
APPROVED			
APPROVED			

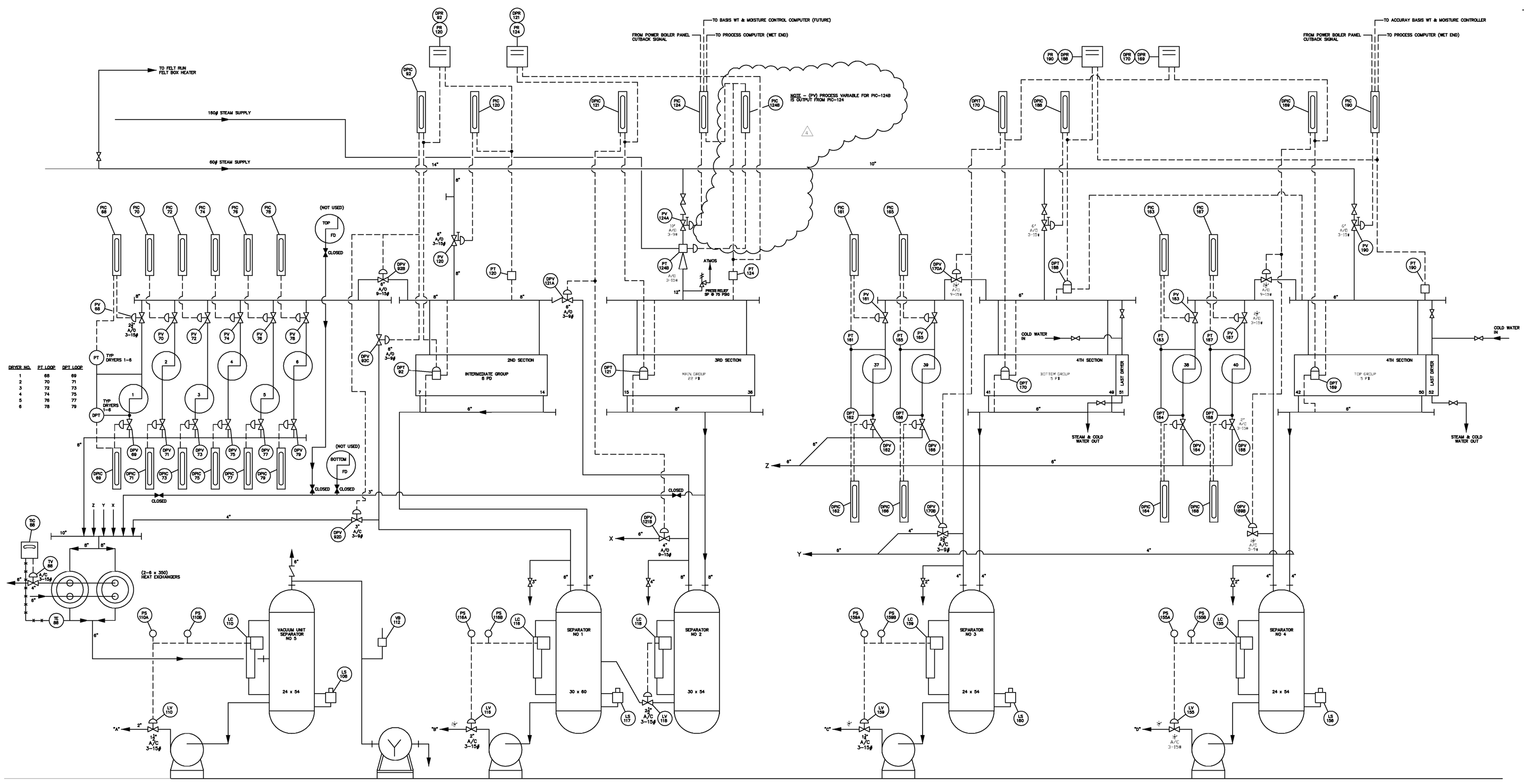

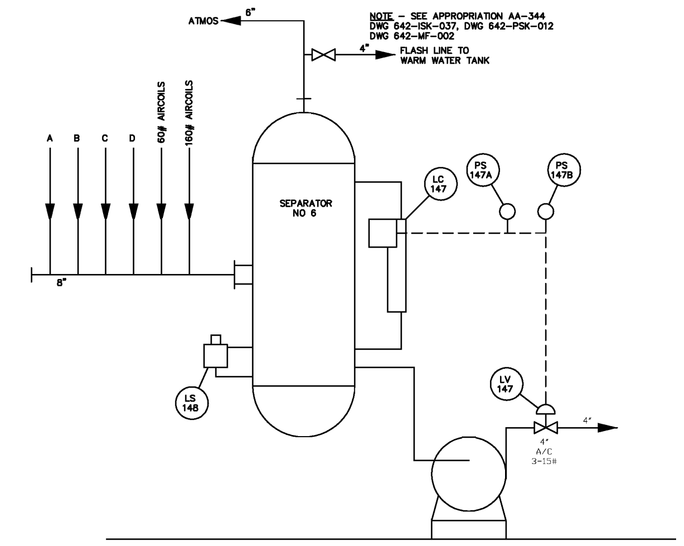

CENTRAL COLLECTION UNIT

NOTE –
REFERENCE: ROSS MIDWEST FULTON
DWG NO B-15443-2

LEGEND

– CONTROLLER
FD – FELT DRYER
PD – PAPER DRYER
A/O – AIR TO OPEN
A/C – AIR TO CLOSE

REV	DATE	DESCRIPTION	DRN	CH'D	AP'D
4	8/18/04	ADDED PIC 124B, REDRAWN ON CAD	MPC		
3	10/8/03	CHG HEADER SIZES, 4TH SECTION	GTS	RSH	
2	4/25/88	DELETED ITEM NOS, ADD LOOP NOS	PDW		
1	2/28/79	ADDED REF. NOTE	SW		

Domtar

COMMUNICATION PAPERS DIVISION
ASHDOWN MILL

Brown & Root, Inc.
Engineers • Constructors
Houston, Texas USA

No 61 PAPER MACHINE
DRYER STEAM
& DRAINAGE SYSTEM

AFE NO. PROJECT NO.

SCALE: NTS	DATE	DRAWING NO.	REV
DRAWN: B GILES	6/27/73	642–MF–006 SHEET 1 OF 2	4
CHECKED:			
APPROVED:			
APPROVED:			

DISTRIBUTION:

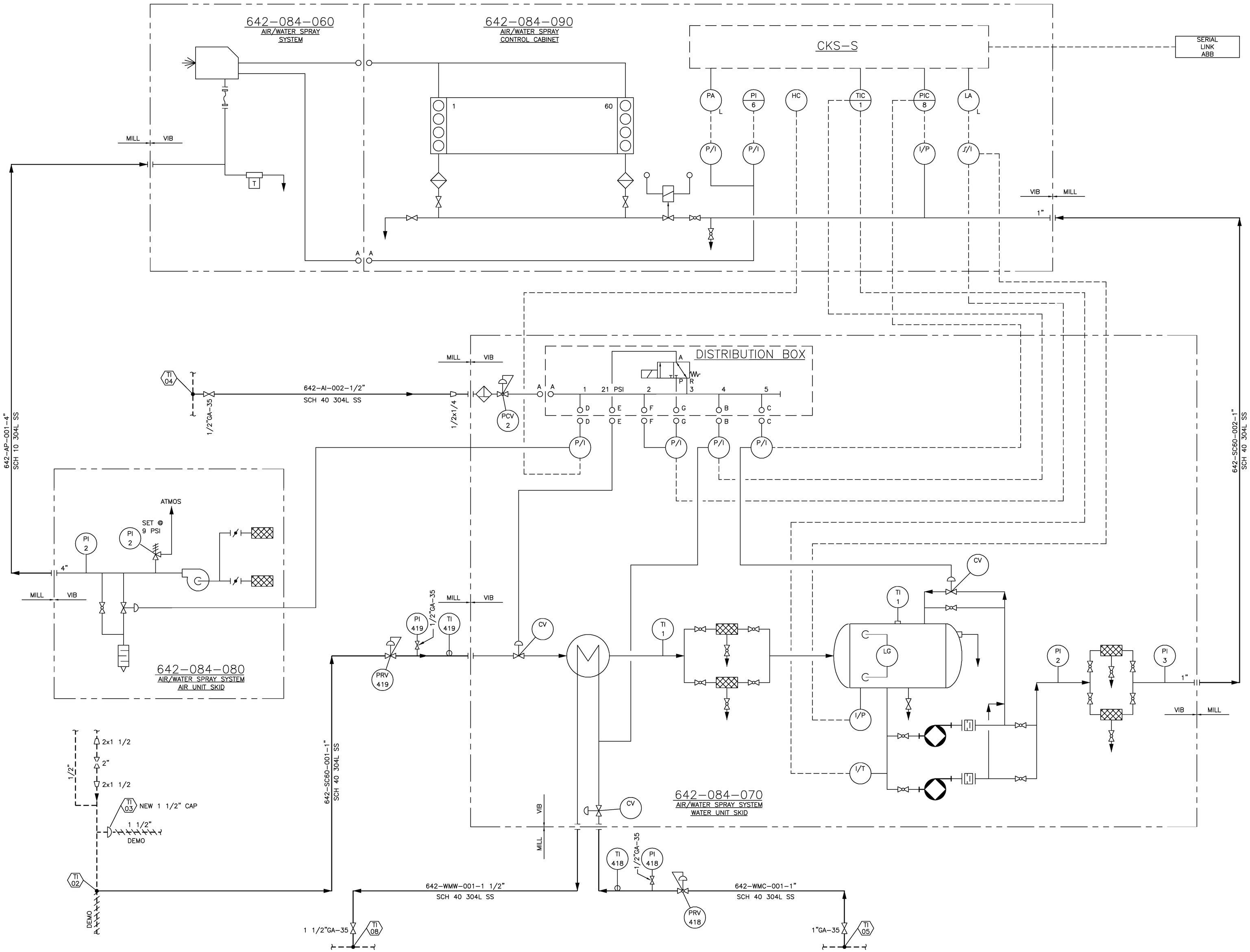

NOTES:
1. FOR ADDITIONAL VIB INFORMATION SEE VIB DWG NO. 1-032-0129

REV	DATE	DESCRIPTION	DRWN	CHKD

CONSULTANT:
Ford, Bacon & Davis INCORPORATED

Georgia-Pacific
THE GROWTH COMPANY

COMMUNICATION PAPERS DIVISION
ASHDOWN OPERATIONS

TITLE:
ACCURAY UPGRADE
P&ID-AIR & WATER SPRAY SYSTEM

SCALE: NONE	DATE	GP PROJ. NO.	
DRAWN: K. MOORE	4-21-94		
CHECKED:		DRAWING NO. 642-MF-007 SHEET 1 OF 1	REV A
APPROVED:			
APPROVED:		CAD FILE: 42MF07	

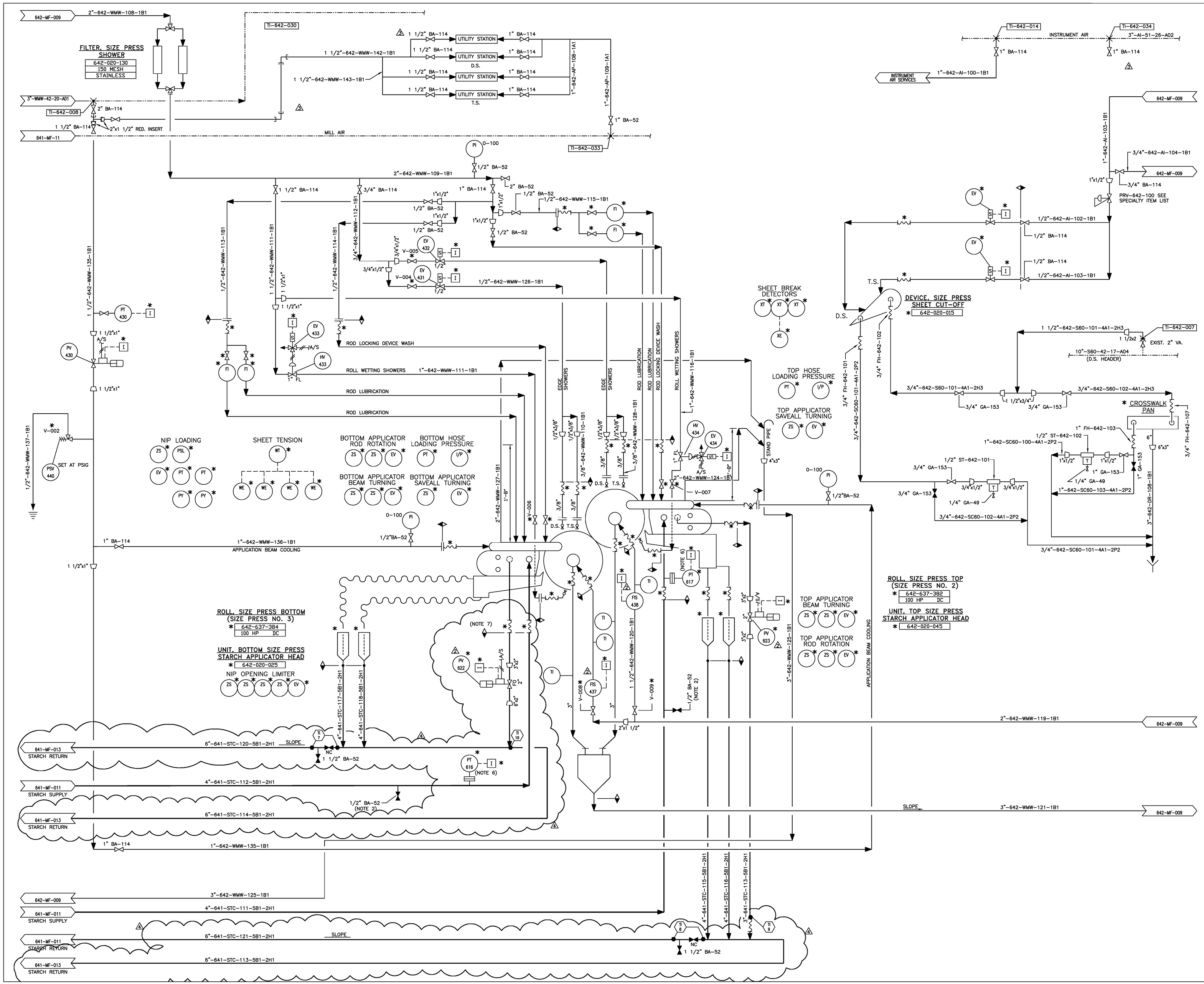

NOTES:

1. ▲ VENDOR PIPING TERMINAL POINT
   ▼ GP PIPING TERMINAL POINT
2. PI & SAMPLE VALVE LOCATED ABOVE OPERATOR FLOOR
3. ✱ INDICATES VENDOR SUPPLIED.
4. FH, ST ITEMS ARE LISTED ON SPECIALTY ITEM LIST.
5. SEE VALMET DRAWINGS FOR DETAILS & CONST. OF PNEUMATIC CIRCUITS.
6. PRESSURE TRANSMITTER TO BE MOUNTED AT CENTERLINE OF APPLICATOR HEAD.
7. ALL CONNECTIONS TO SAVEALL AND HEAD MUST BE HOSE TO ALLOW FOR TURNING.
8. SEE VALMET LOGIC FOR INTERLOCK LOGIC

REV	DATE	DESCRIPTION	DRWN	CO	CHKD
5	06/03/04	STARCH FILTER ADDITION- IFC	JGS		
4	02/02/04	FOR STARCH FILTER APPROVAL	DEB		
3	12/29/98	REVISED TO AS-BUILT	MM		
2	11/24/98	REVISED AS SCOPED	MM		CR
1	10/28/98	REVISED AS SCOPED	RNE		CR
0	10/19/98	ISSUED FOR CONSTRUCTION	DER		CR

R-S-H ENGINEERING, INC.
MONROE, LA. TEL. (318)323-4009
www.rsheng.com FAX (318)387-4828
JOB NO: 12048 CAD FILE: MF008

Georgia-Pacific
THE GROWTH COMPANY

COMMUNICATION PAPERS DIVISION
ASHDOWN OPERATIONS

TITLE: 61 PM METERING SIZE PRESS ENGINEERING FLOW DIAGRAM SIZE PRESS

SCALE: NONE	DATE	GP PROJ. NO.	
DRAWN: D. REMILLARD	7/9/98	DRAWING NO. 642-MF-008	REV 5
CHECKED:		SHEET OF	
APPROVED: D. McADAMS	8/12/98		
APPROVED:		AFE NO. AA-431	

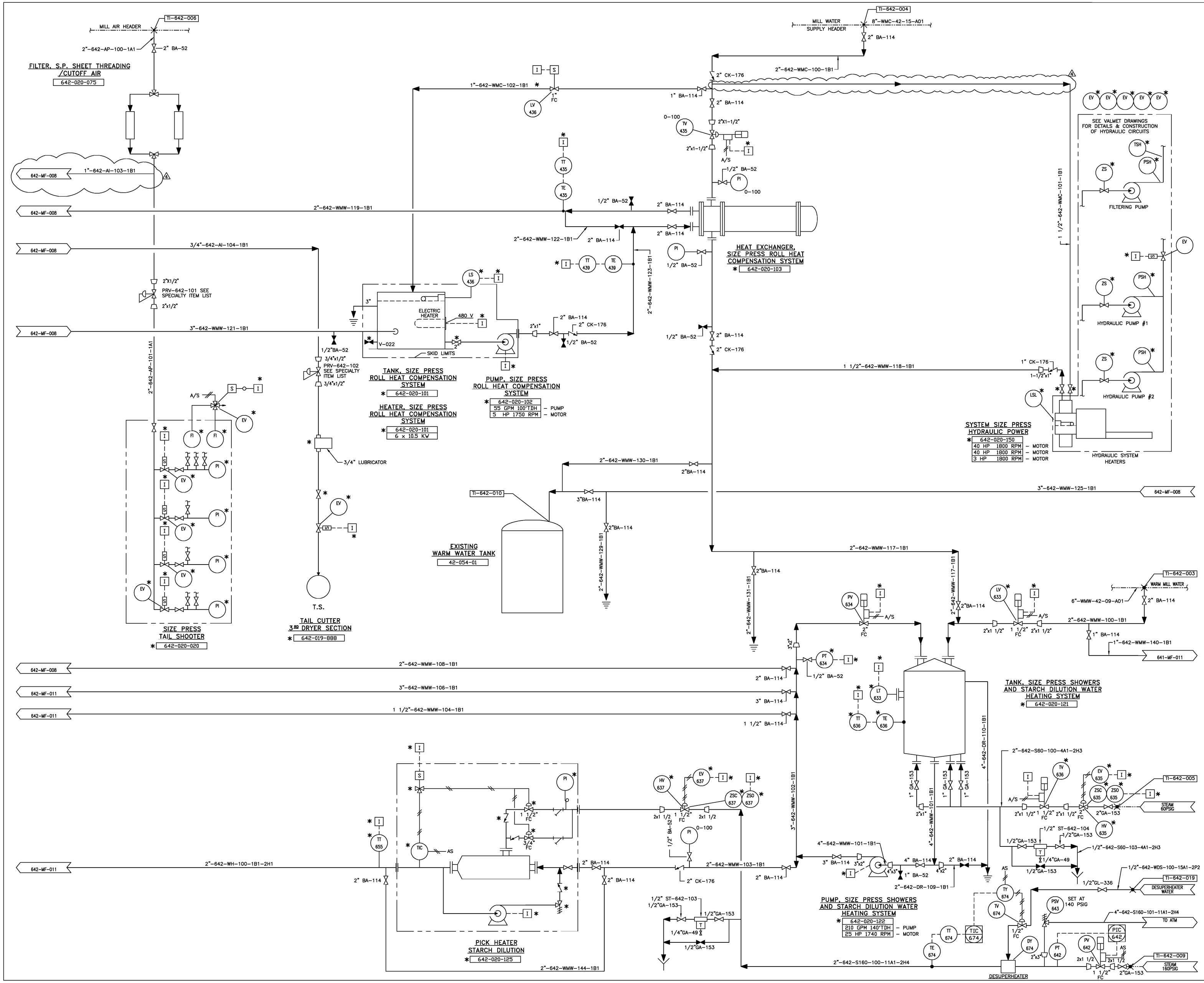

NOTES:

1. ▲ VENDOR PIPING TERMINAL POINT
   ▼ GP
2. ✱ INDICATES VENDOR SUPPLIED.
3. SEE VALMET DRAWINGS FOR DETAILS & CONST. OF PNEUMATIC CIRCUITS.
4. SEE VALMET LOGIC FOR INTERLOCK LOGIC

REV	DATE	DESCRIPTION	DRWN	CO	CHKD
4	12/29/98	REVISED TO AS-BUILT	MM		
3	12/3/98	REVISED AS SCOPED	MM		
2	11/24/98	REVISED AS SCOPED	MM		CR
1	10/28/98	REVISED AS SCOPED	RNE		CR
0	10/19/98	ISSUED FOR CONSTRUCTION	DER		CR

R-S-H ENGINEERING, INC.
MONROE, LA. TEL. (318)323-4009
www.rsheng.com FAX (318)387-4828
JOB NO: 11021 CAD FILE: MF009

Georgia-Pacific
THE GROWTH COMPANY

COMMUNICATION PAPERS DIVISION
ASHDOWN OPERATIONS

TITLE: 61 METERING SIZE PRESS ENGINEERING FLOW DIAGRAM AUXILIARY SYSTEMS

SCALE: NONE	DATE	GP PROJ. NO.	
DRAWN: D. REMILLARD	7/9/98	DRAWING NO. 642-MF-009	REV 4
CHECKED:		SHEET OF	
APPROVED: D. McADAMS	8/12/98		
APPROVED:		AFE NO. AA-431	

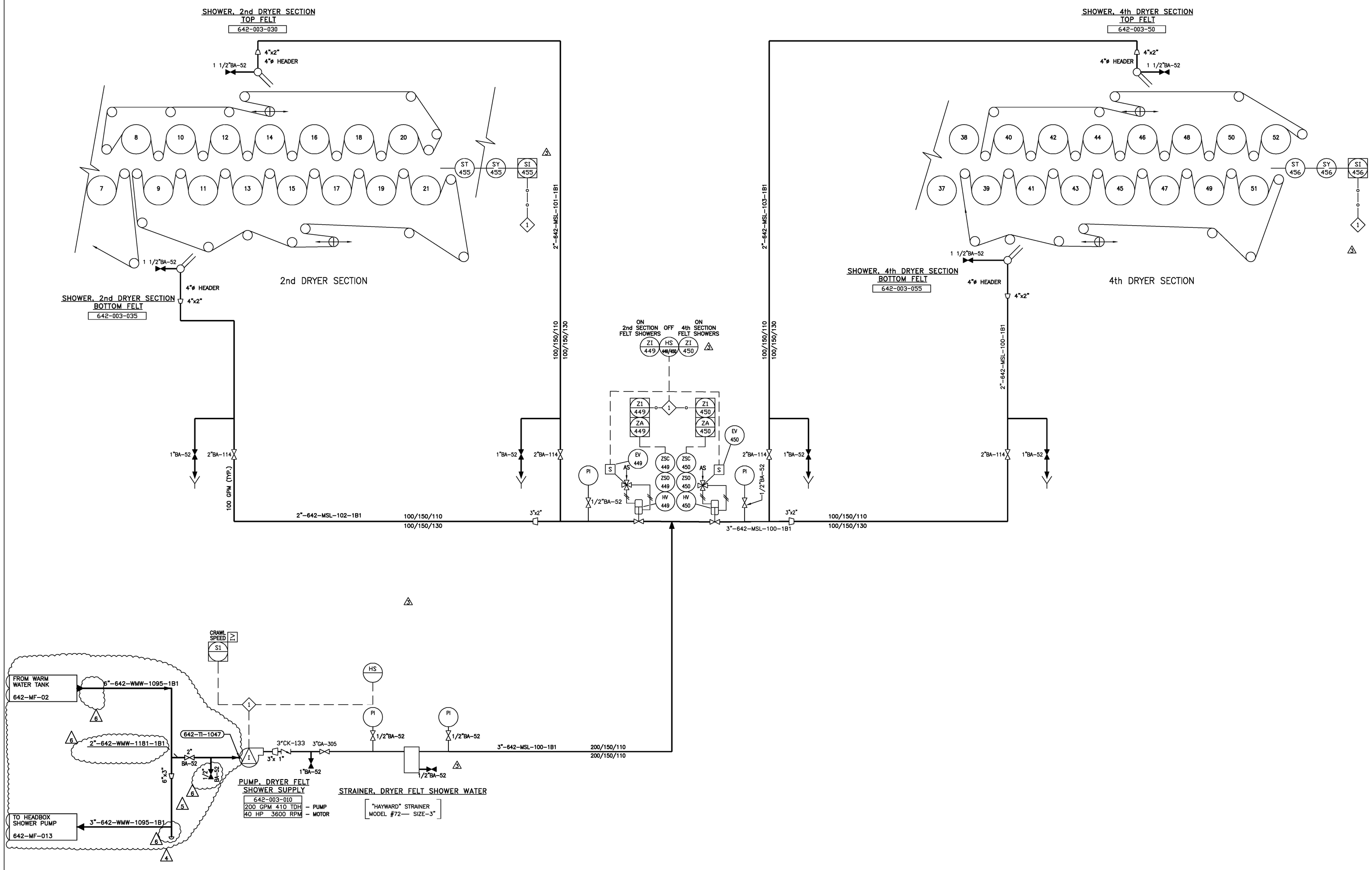

DRY FELT SHOWER SYSTEM
642-003-000

NOTES:

1 – HV-449 & HV-450 WILL CLOSE AND NOT OPEN IF THE ASSOCIATED FELT SPEED IS LESS THAN CRAWL SPEED OR MORE THAN 1000 FPM. PUMP 642-003-010, FELT SHOWER SUPPLY PUMP WILL STOP AND NOT START UNLESS AT LEAST ONE OF THE DRYER FELT SPEEDS IS ABOVE CRAWL SPEED AND LESS THAN 1000 FPM. HS-449/450 MUST BE OFF TO START PUMP. UNLESS AT LEAST ONE VALVE (EITHER HV-449 OR HV-450) IS OPEN AFTER THE PUMP HAS BEEN RUNNING 2 MINUTES, THE PUMP WILL STOP.

LEGEND:

NORMAL FLOW (GPM)/PRESSURE (PSIG)/TEMPERATURE (°F)
DESIGN FLOW (GPM)/PRESSURE (PSIG)/TEMPERATURE (°F)

STAFF:	BOB BLOUNT	DATE: 11/29/06
INST.:	JK	DATE: 11/29/06
MECH.:	ROB HAYES	DATE: 11/29/06
DEPT. MGR.:	DFT	DATE: 11/29/06

REV	DATE	DESCRIPTION	DRWN	CO	CHKD
6	11/29/06	RELEASED FOR DESIGN NO. 61 PM PROJECT BEAK CONTRACT NO 3008047 DNA-Y			DW
5	08/06	RELEASED FOR DESIGN NO. 61 PM PROJECT BEAK CONTRACT NO 3008047 DNA-Y			
4	6/8/06	RELEASED FOR DESIGN NO. 61 PM PROJECT BEAK CONTRACT NO 3008047 DNA-Y	WB		DW
3	10/28/99	ADDED INTERLOCKS & INDICATORS	MLS		WTS
2	6/8/99	REVISED AS NOTED	R.L.L.		R.N.E.
1	12/21/98	LIMIT SWITCH ADDED TO HV449 & HV450	MM		
0	11/18/98	ISSUED FOR CONSTRUCTION	MM		BDB

R-S-H ENGINEERING, INC.
MONROE, LA. TEL (318)323-4009
www.rsheng.com FAX (318)387-4828
JOB NO: 11074 CAD FILE: 642MF010

Georgia-Pacific
THE GROWTH COMPANY

COMMUNICATION PAPERS DIVISION
ASHDOWN OPERATIONS

TITLE: NO. 61 PAPER MACHINE
PROCESS & INSTRUMENTATION DIAGRAM
DRYER FELT SHOWER SYSTEM

SCALE: NONE	DATE	GP PROJ. NO. AA-436	
DRAWN: M. MASONER	11/5/98	DRAWING NO. 642-MF-010	REV 6
CHECKED: B. BALL	11/11/98		
APPROVED: C. RAND, Jr.	11/11/98	SHEET 1 OF 1	
APPROVED:		AFE NO.	

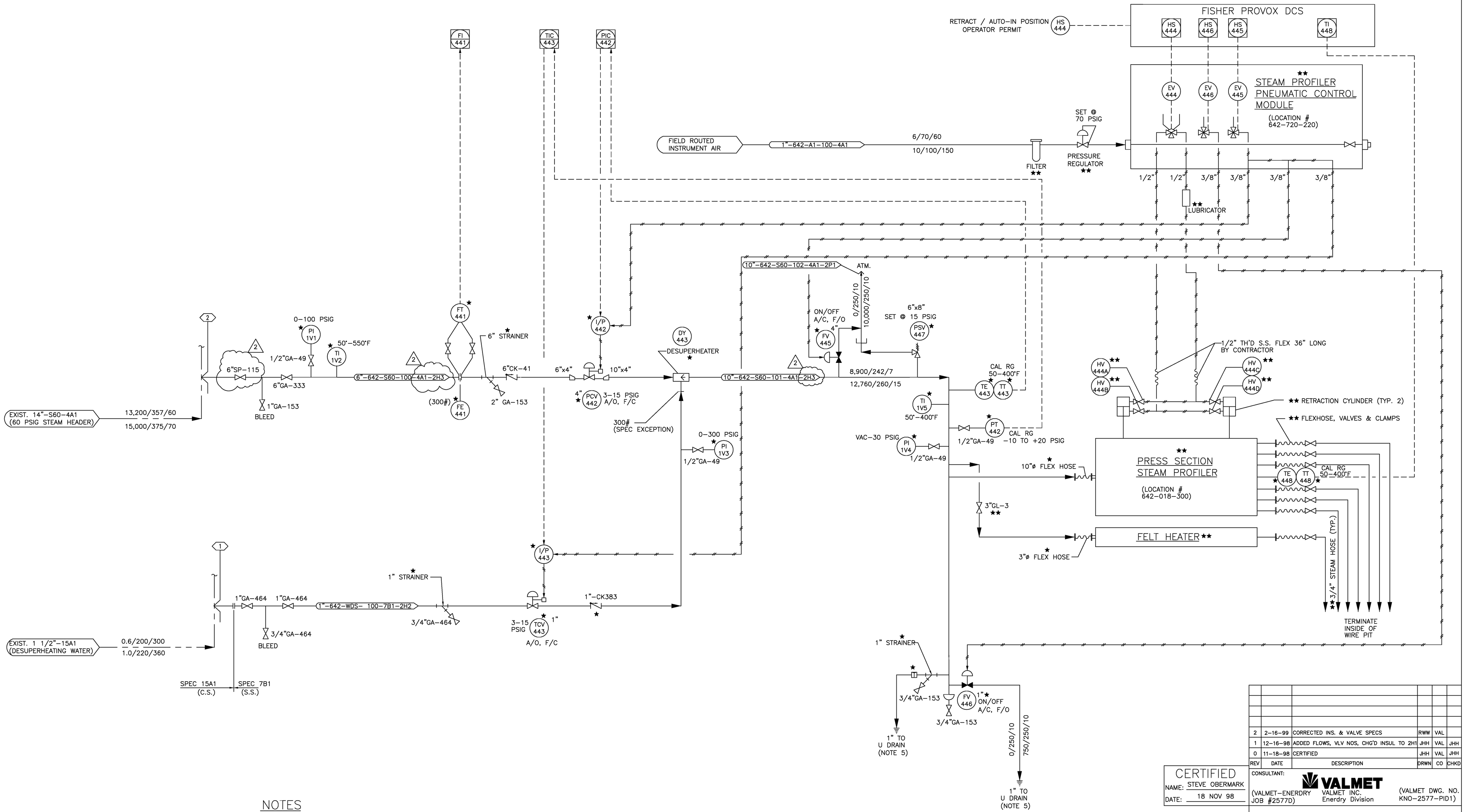

NOTES

1. ★ –INDICATES EQUIPMENT FURNISHED BY VALMET–ENERDRY DIV.
2. ★★ –INDICATES EQUIPMENT FURNISHED BY V.I.B.
3. (X) INDICATES TIE–IN NUMBER
4. INDICATES TIE–IN TO EXISTING PIPING.
5. DRAIN LINES MUST BE PIPED TO AN ATMOSPHERIC DRAIN SUCH AS A U–DRAIN, NOT TO A CONDENSATE HEADER.
6. MINIMUM STRAIGHT RUNS OF PIPE ARE REQUIRED UPSTREAM AND DOWNSTREAM OF THE FLOW ORIFICE AND THE DESUPERHEATER. SEE ORTHOGRAPHIC PIPING DRAWINGS FOR EXACT REQUIREMENTS.
7. ALL INSTRUMENT TAG NUMBERS ON THIS DRAWING HAVE THE PREFIX 642 UNLESS OTHERWISE NOTED (E.G. 642–FE–441).
8. FLOW CONDITIONS ARE SHOWN ON PIPING AS FOLLOWS:

PIPE CONTENTS	FLOW CONDITIONS LEGEND	
STEAM & VENT	NORMAL	FLOW(#/HR/TEMP.(°F)/PRESS.(PSIG)
	MAXIMUM DESIGN	FLOW(#/HR)/TEMP.(°F)/PRESS.(PSIG)
DESUPERHEATING WATER & CONDENSATE	NORMAL	FLOW(GPM)/TEMP.(°F)/PRESS.(PSIG)
	MAXIMUM DESIGN	FLOW(GPM)/TEMP.(°F)/PRESS.(PSIG)
INSTRUMENT AIR	NORMAL	FLOW(SCFM)/TEMP.(°F)/PRESS.(PSIG)
	MAXIMUM DESIGN	FLOW(SCFM)/TEMP.(°F)/PRESS.(PSIG)

REV	DATE	DESCRIPTION	DRWN	CO	CHKD
2	2–16–99	CORRECTED INS. & VALVE SPECS	RWW	VAL	
1	12–16–98	ADDED FLOWS, VLV NOS, CHG'D INSUL TO 2H1	JHH	VAL	JHH
0	11–18–98	CERTIFIED	JHH	VAL	JHH

CERTIFIED
NAME: STEVE OBERMARK
DATE: 18 NOV 98

CONSULTANT:
VALMET
(VALMET–ENERDRY JOB #2577D)
VALMET INC. Enerdry Division
(VALMET DWG. NO. KNO–2577–PID1)

Georgia-Pacific
THE GROWTH COMPANY

COMMUNICATION PAPERS DIVISION
ASHDOWN OPERATIONS

TITLE: NO. 61 PAPER MACHINE PROCESS & INSTR. DIAGRAM PRESS SECTION STEAM PROFILER

SCALE: NTS	DATE	GP PROJ. NO. AA–436	
DRAWN: JHH	10/27/98	DRAWING NO.	REV
CHECKED: JHH	12/16/98	642–MF–011	2
APPROVED:		SHEET 1 OF 1	
APPROVED:		CAD FILE: MF011	

VALMET CAD FILE #2577PD1.DWG

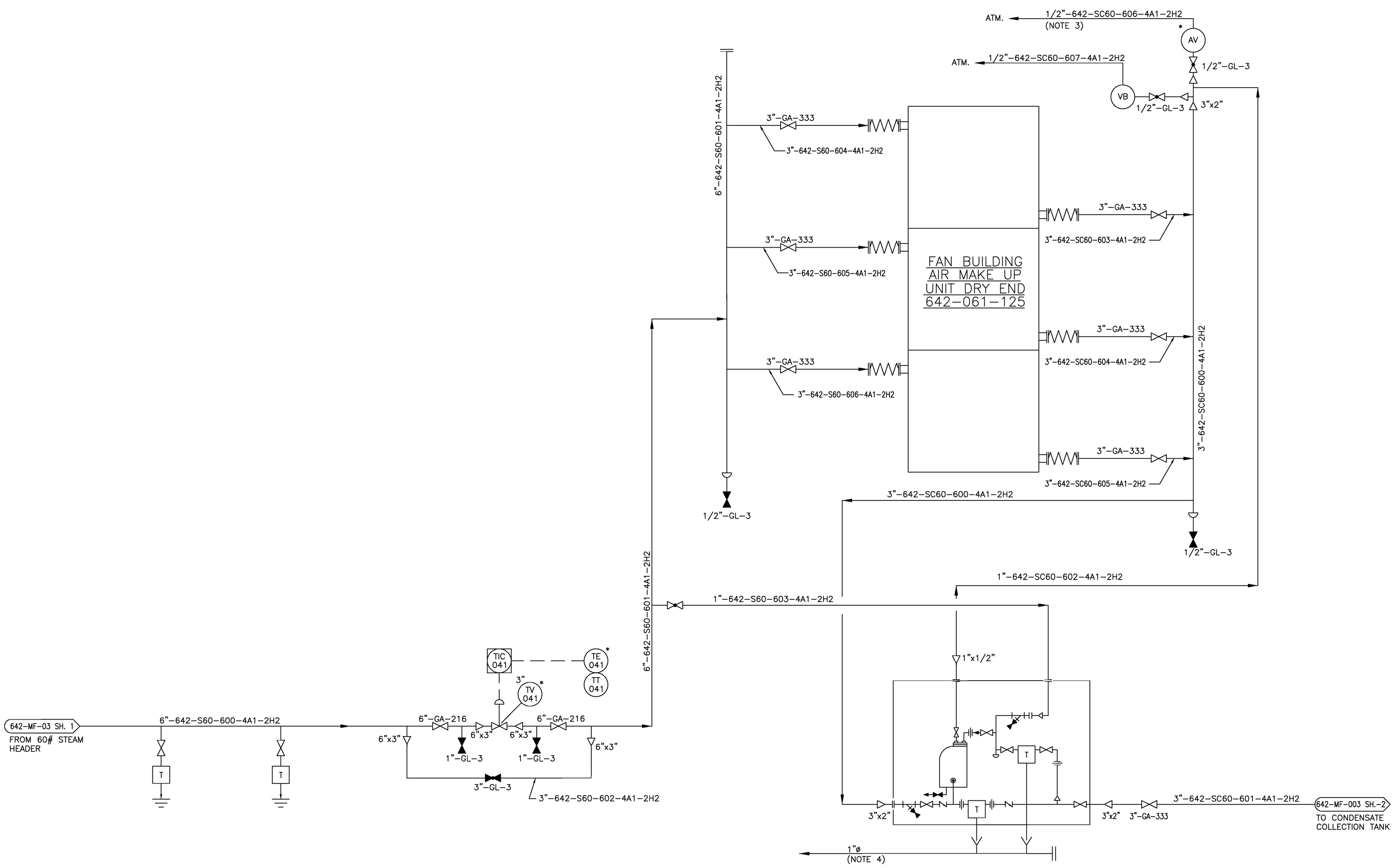

PROCESS CONDENSATE
REMOVAL MODULE *
642-061-125
003-00662

NOTES:

1. STEAM TRAPS TO BE LOCATED AT ALL CHANGE IN DIRECTION AND PER CHART BELOW.
2. A. 1/2" STEAM TRAP, YARWAY-SERIES 720 OR ARMSTRONG-CD 61A, IN VERTICAL, TO PREVENT FREEZING. INTEGRAL STRAINER WITH BLOW-DOWN.
   B. PIPING TO BE PER APPLICABLE SPECIFICATION.
   C. FOR HIGH CONDENSATE LOAD. CHECK TRAP SIZE REQUIREMENT.

MAX. HORIZONTAL RUN BETWEEN TRAPS (FEET)							
PIPE SIZE (IN.)	STEAM PRESSURE (PSIG)						
	10	20	50	100	200	300	400
UNDER 6	500	500	500	500	500	500	500
6	500	500	480	410	340	310	280
8	490	410	320	270	230	205	190
10	350	280	230	190	160	150	140
12	280	235	180	155	130	120	110
14	220	185	150	125	105	100	100
16	170	140	110	100	100	100	100
18	135	110	100	100	100	100	100
OVER 18	100	100	100	100	100	100	100

3. FIELD TO ROUTE AIR VENT EXHAUST PORT TO A SAFE DISCHARGE LOCATION.
4. FIELD TO ROUTE DRAIN HEADER TO A SAFE LOCATION AS DIRECTED BY GEORGIA-PACIFIC PERSONNEL.

LEGEND

- * SUPPLIED BY THERMAL SYSTEM GROUP
- FLEX CONNECTION
- VB VACUUM BREAKER
- AV AIR VENT
- T TRAP

REV	DATE	DESCRIPTION	DRN	CH'D	AP'D
0	11/02/00	RELEASED FOR CONSTRUCTION	BG	AJ	JC

GEORGIA-PACIFIC

COMMUNICATION PAPERS DIVISION
ASHDOWN OPERATIONS

MARTECH ENGINEERING, INC.

TITLE: NO. 61 PAPER MACHINE DRY END AIR MAKE-UP UNIT P&ID

AFE NO.
PROJECT NO. 00180

		DATE	DRAWING NO.	REV
SCALE:	N/A		642-MF-012	0
DRAWN:	DV	9/00		
CHECKED:	AJ	9/00		
APPROVED:	M.B.	9/00		
APPROVED:				
DISTRIBUTION:				

RELEASED FOR CONSTRUCTION
BY J.C. DATE 11/02/00

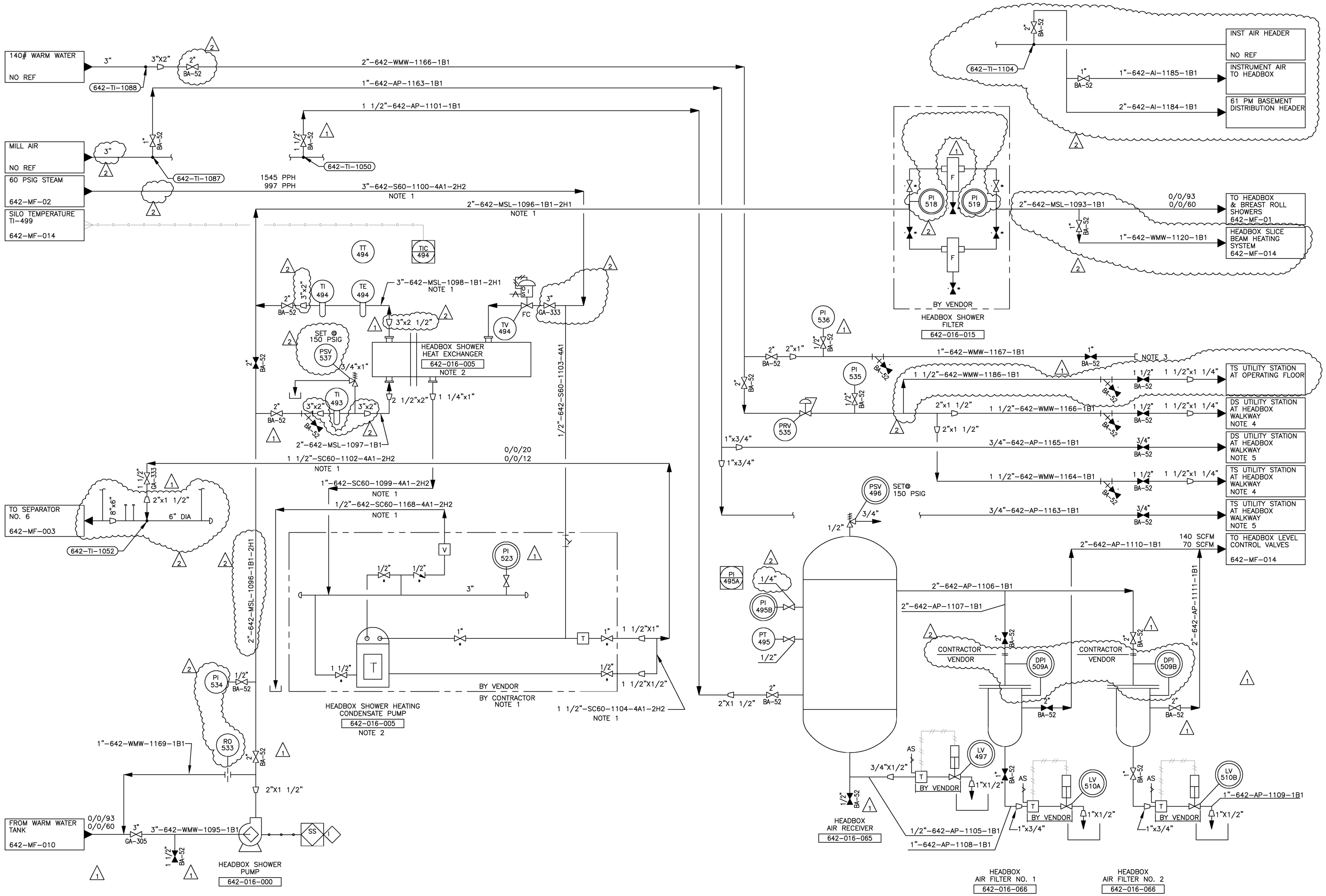

NOTES:

1. INSULATE PER SPECIFICATION 100-D-081-012.

2. INSULATE WITH REUSABLE INSULATION JACKET, 1 INCH THICK FIBERGLASS MAT, PTFE COATED FIBERGLASS INNER AND OUTER FABRIC.

3. LOCKING CAMLOCK QUICK DISCONNECT WITH DUST PLUG. LOCATED ON TENDING SIDE AT OPERATING FLOOR LEVEL.

4. HOSE RACK & 1-1/4" DIA HOSE, 50 FEET LONG, B.F. GOODRICH 1778 PAPER MILL HOSE OR EQUAL. SEE DRAWING FOR UTILITY STATION LOCATIONS.

5. HOSE REEL AND 3/4" DIA HOSE, 50 FT LONG.
REEL: REELCRAFT 83000 OLS OR EQUAL
HOSE: REELCRAFT 601026-50 OR EQUAL
BUMPER: REELCRAFT 3-HS-2004-3
SEE DWG FOR UTILITY STATION LOCATIONS.

6. ALL INSTRUMENT TAG NUMBERS ON THIS DRAWING ARE PREFIXED WITH AREA NUMBER 642, UNLESS OTHERWISE NOTED.

LEGEND:

VENDOR SUPPLIED INSTRUMENT

FLOW LEGEND:

BDTPD/%DS/GPM	MAXIMUM
BDTPD/%DS/GPM	DESIGN
BDTPD/%DS/GPM	MINIMUM

STAFF:	BOB BLOUNT	DATE: 11/29/06
INST.:	JK	DATE: 11/29/06
MECH.:	ROB HAYES	DATE: 11/29/06
DEPT. MGR.:	DFT	DATE: 11/29/06

REV	DATE	DESCRIPTION	DRN	CO	AP'D
2	11/29/06	GENERAL RVISION			DW
1	8/06	REV INSTR. & PIPING & VALVE CALLOUTS			DW
0	7/06	RELEASED FOR DESIGN	WB		DW

BE&K ENGINEERING CO. BIRMINGHAM, ALABAMA FOR

BE&K CONTRACT NO. 5002047

Domtar

COMMUNICATION PAPERS DIVISION
ASHDOWN MILL

NO. 61 PAPER MACHINE
PROCESS & INSTRUMENTATION DIAGRAM
HEADBOX UTILS & SHWR SYS

P.E. STAMP

AR NO.		PROJECT NO.	
SCALE: NONE	DATE	DRAWING NO.	REV
DRAWN:		642-MF-013	2
CHECKED:		SHEET 1 OF 1	
APPROVED:			
APPROVED:			

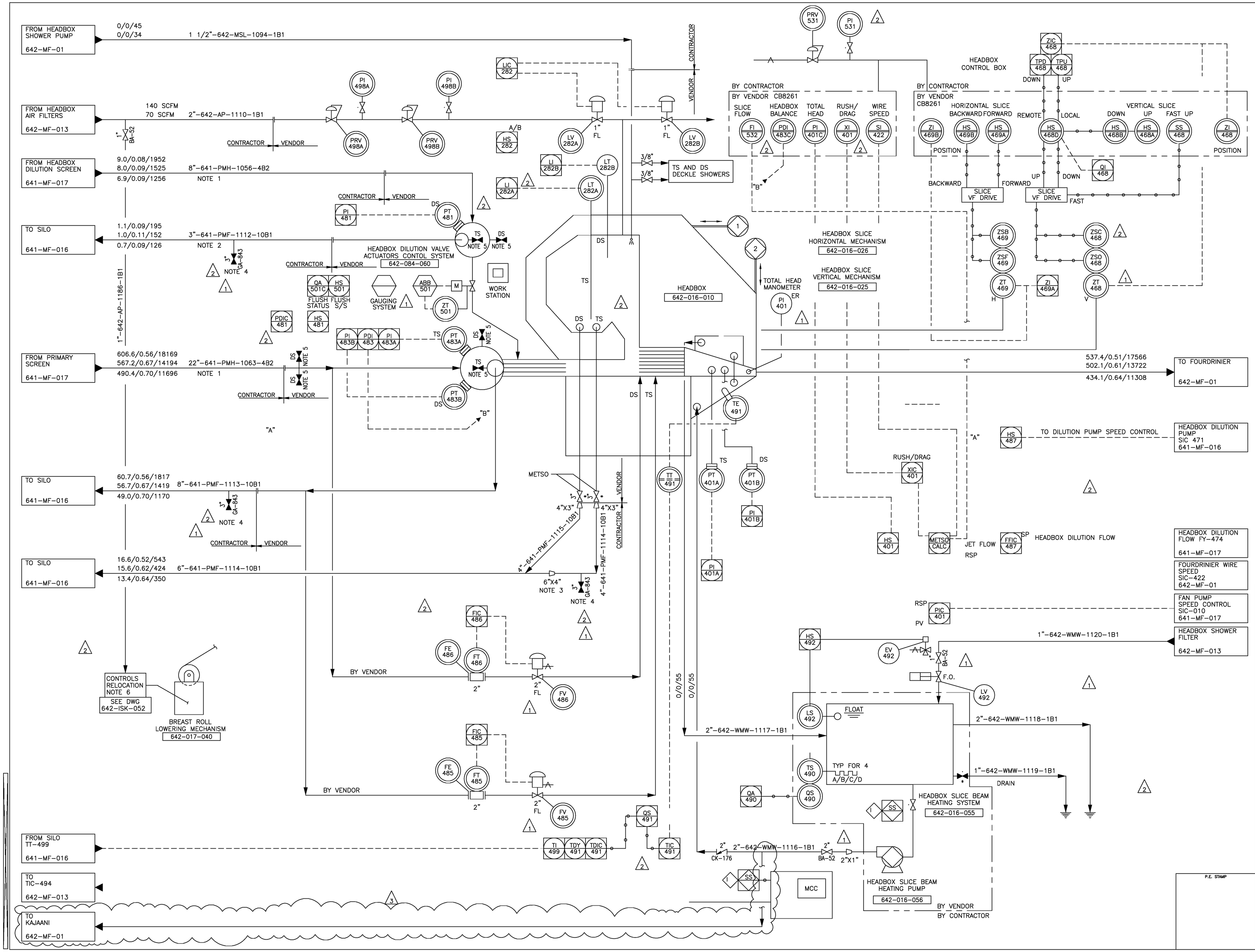

NOTES:

1. ELECTROPOLISH PIPE FINISH, FIELD WELDS COTTONBALL FINISH, METAL TO METAL FLANGES.
2. SLOPE UP IN DIRECTION OF FLOW PER METSO PIPING INSTRUCTIONS.
3. REDUCER ORIENTATION PER METSO PIPING INSTRUCTIONS.
4. LOW POINT DRAIN.
5. SENSODEC PRESSURE PULSATION MEASUREMENT CONNECTION WITH VALVE AND PLUG SUPPLIED BY METSO.
6. CONTRACTOR TO SALVAGE AND RELOCATE EXISTING 3-POSITION RAISE/LOWER VALVE, AIR FILTERS, ETC. FROM EXISTING HEADBOX TS SUPPORT TO NEW HEADBOX TS SUPPORT. △2
7. ALL INSTRUMENT TAG NUMBERS ON THIS DRAWING ARE PREFIXED WITH AREA NUMBER 642, UNLESS OTHERWISE NOTED.

LEGEND:

VENDOR SUPPLIED INSTRUMENT

FLOW LEGEND:

BDTPD/%DS/GPM	MAXIMUM
BDTPD/%DS/GPM	DESIGN
BDTPD/%DS/GPM	MINIMUM

STAFF:	BOB BLOUNT	DATE: 11/29/06
INST.:	JK	DATE: 11/29/06
MECH.:	ROB HAYES	DATE: 11/29/06
DEPT. MGR.:	DFT	DATE: 11/29/06

REV	DATE	DESCRIPTION	DRN	CO	AP'D
3	4/8/08	ADD FLUSH TO KAJAANI RM3	RSH	GWC	
2	11/29/06	GENERAL REVISION			DW
1	8/06	REV INSTR & VALVE CALLOUTS			DW
0	7/06	RELEASED FOR DESIGN	WB		DW

BE&K ENGINEERING CO. BIRMINGHAM, ALABAMA FOR

BE&K CONTRACT NO. 5002047

Domtar

COMMUNICATION PAPERS DIVISION
ASHDOWN MILL

No. 61 PAPER MACHINE
PROCESS & INSTRUMENTATION DIAGRAM
HEADBOX

P.E. STAMP

AR NO.		PROJECT NO.	
SCALE: NONE	DATE	DRAWING NO.	REV
DRAWN: DJT		642-MF-014	3
CHECKED:		SHEET 1 OF 1	
APPROVED:			
APPROVED:			

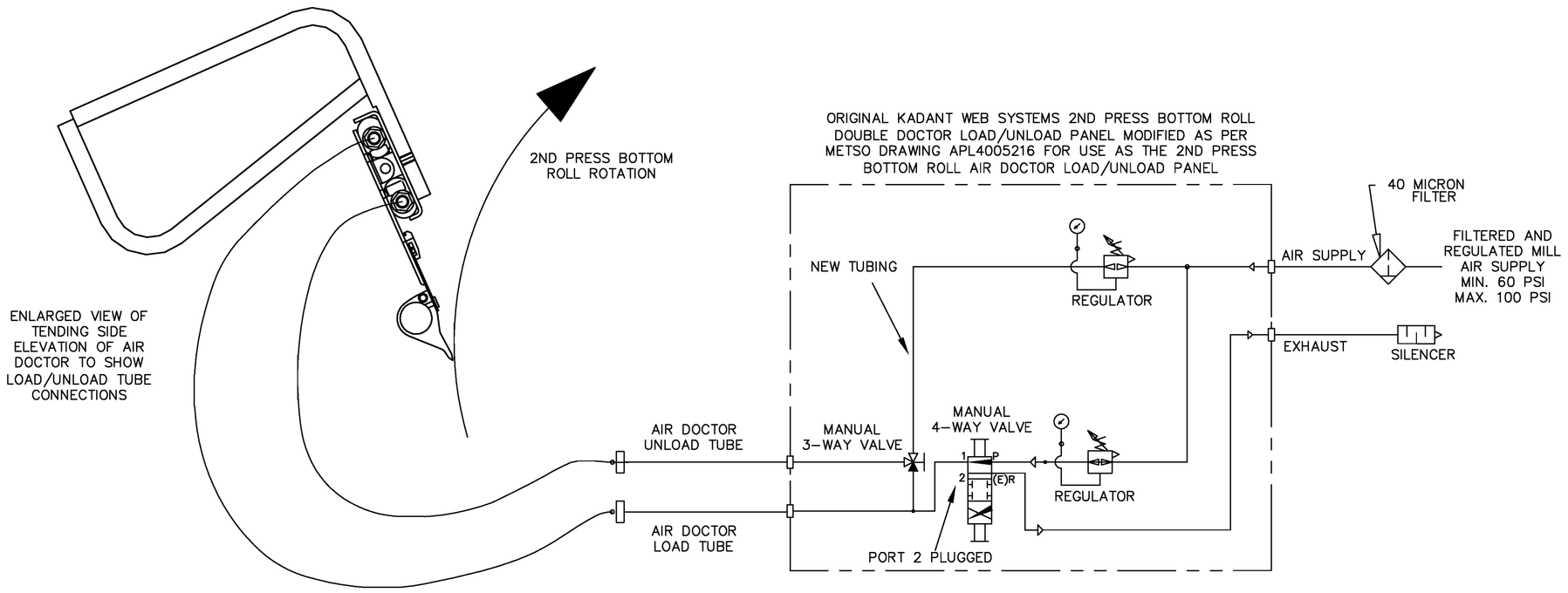

LOAD/UNLOAD CONTROL PANEL
NEAR PRESS BENCHBOARD

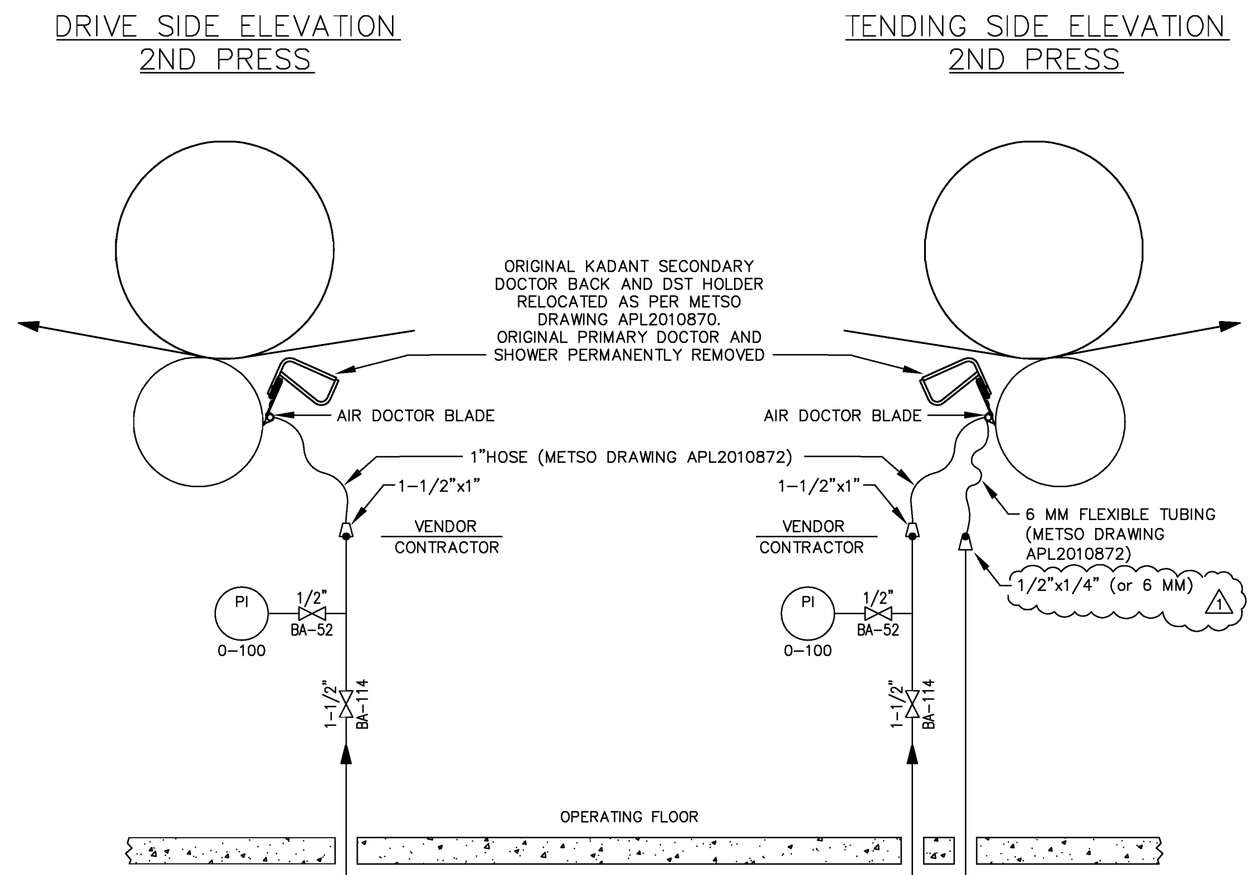

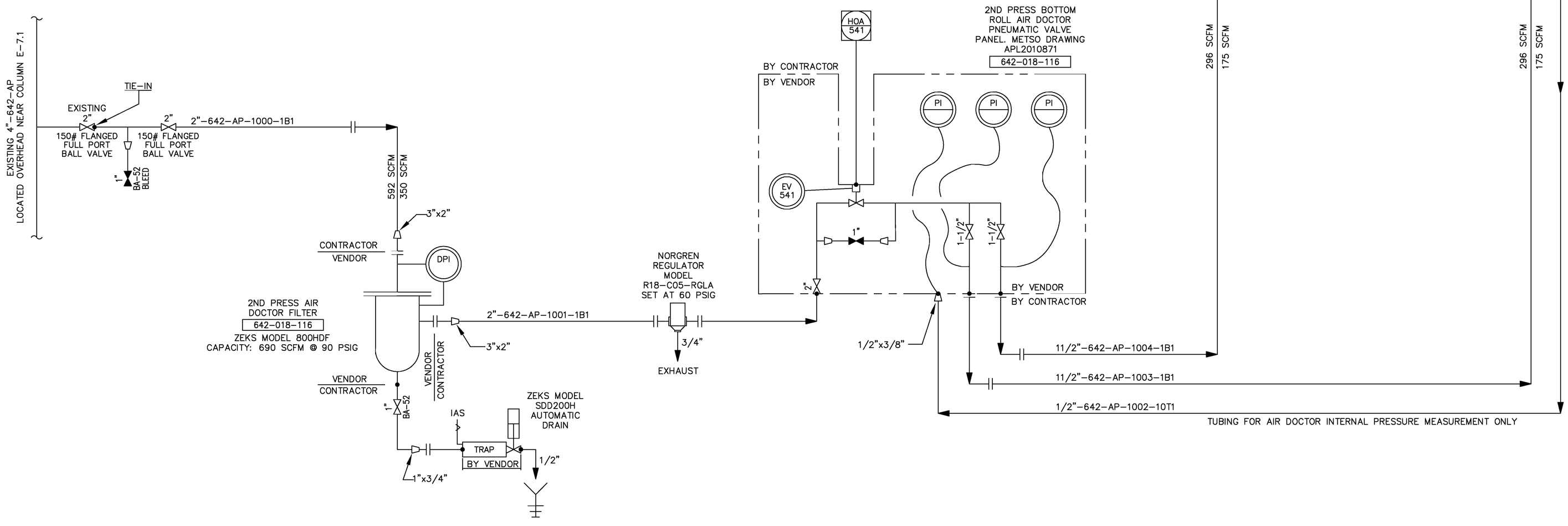

NOTES:

1. ALL INSTRUMENT TAG NUMBERS ON THIS DRAWING ARE PREFIXED WITH AREA NUMBER 642, UNLESS OTHERWISE NOTED.

LEGEND:

VENDOR SUPPLIED INSTRUMENT

FLOW LEGEND:

SCFM DESIGN
SCFM NORMAL

REV	DATE	DESCRIPTION	DRN	CO	AP'D
1	4/7/09	AS BUILT	DJM	DOM	
0	2/3/09	ISSUED FOR CONSTRUCTION	DJM	DOM	

Domtar

COMMUNICATION PAPERS DIVISION
ASHDOWN MILL

NO. 61 PAPER MACHINE
PROCESS & INSTRUMENTATION DIAGRAM
2ND PRESS BOTTOM ROLL AIR DOCTOR

AR NO. ASHC0984		PROJECT NO.	
SCALE: NONE	DATE	DRAWING NO.	REV
DRAWN: DJM	1/15/09	642-MF-015	1
CHECKED:			
APPROVED:			
APPROVED:			