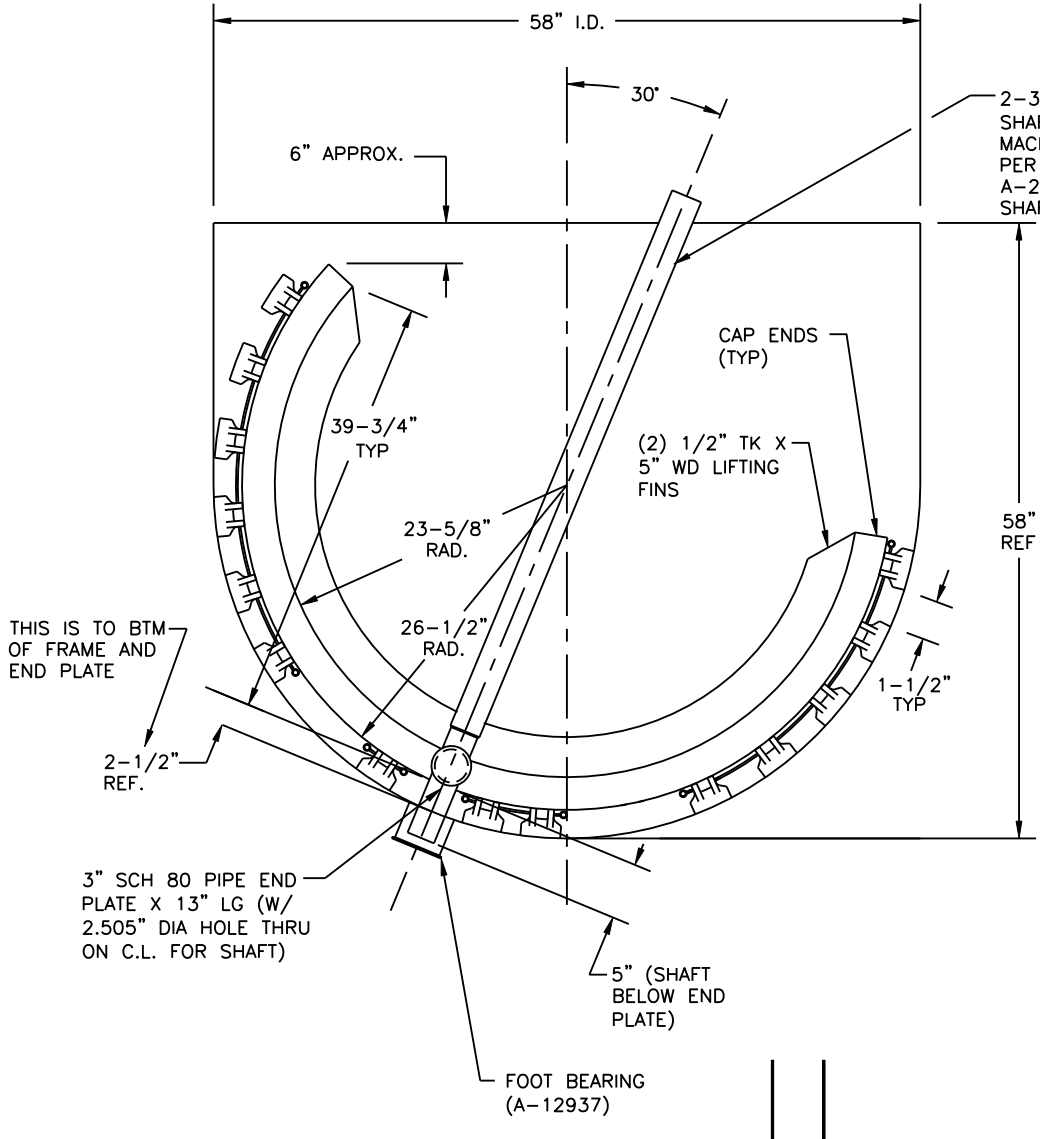

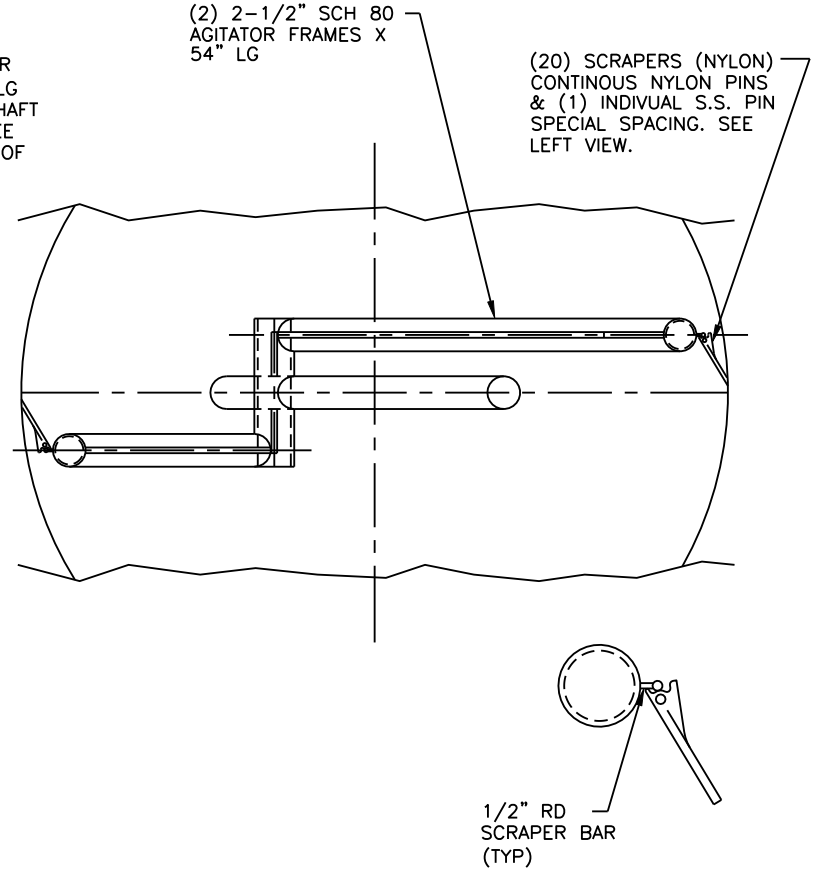

REV.	DESCRIPTION	DATE

PROCESS SYSTEMS & EQUIPMENT
DIVISION OF LEE INDUSTRIES, INC.
PHILIPSBURG, PA.

#10 INCLINED PRIMARY AGITATOR ASSY FOR 400 GALLON KETTLE

SCALE: NONE	DATE: 4-27-01	
DRAWN BY: JAD	DRAWING NO. B-14121	REV. 0
APPROVED BY: JEB PLOT 1"=1"		