25	4		3/4"-10 NC x 1 3/4" HHCS W/NUT	ST. STL.					
26	14		1/2"-13 NC x 1 1/4" HHCS W/NUT	"					
27	1-L-R		HEAD PULLEY GUARD		B-2911-3	X			
28	1		SPREADER BAR		A-5100-1	X			
29	4		3/4"-10 NC HEX NUTS	STL					
30	16		3/8" FLAT WASHER	ST. STL.					
31	4		5/8" " "	" "					
32	1		RUBBER BLADE WIPER		B-9472				
33	1		GUARD - FRONT		B-9471				
34	1		GUARD - REAR		B-9471-1				
35	6		3/8"-16 NC x 3/4" LG. HHCS	S/S					
36	2		3/8"-16 NC HEX NUTS	S/S					
37	2		1/2"-13 NC x 1" LG. HHCS	S/S					
38	2		1/2"-13 NC HEX NUT	S/S					

9	2		DODGE SCM PILLOW BLOCK 1 15/16" Ø BORE						
10	8		DODGE SC PILLOW BLOCK 15/16" Ø BORE						
11	2	A	DODGE TAKE-UP FRAME ASS'Y #303x6						
			W/ SC-1 7/16" BEARINGS				X		
12	1		GLOBE #2303 RUBBER CONVEYOR						
			BELT 3 PLY x 36" WIDE x 34'-10" LG				X		
			CONTINUOUS (1) PIECE W/ MONEL LACING				X		
			ATTACHED				X		
13	1		LITCO INC. BELT GUARD. EXP. METAL FRONT						
			OPEN BACK, "CD" = 25 1/4", "R" = 4 7/8", R1 = 6 7/8"				X		
			"W" = 5"				X		
14	1		CONVEYOR FRAME		D-9284		X		
15	4		4" Ø x 38" FACE IDLER ROLLS		B-2914-3		X		
16	1		HEAD SHAFT		B-2915-3		X		
17	1		TAIL SHAFT		B-2916-2		X		
18	1		REDUCER MOUNTING BRACKET		B-5098-1		X		
19	8		PILLOW BLOCK SHIM		A-5099-2		X		
20	2		STEEL FLAT, SIZE TO SUIT, SHOP TO MOUNT						
			BELT GUARD TO SUIT, WELD OR BOLT TO				X		
			GUARD, BOLT TO MOTOR MOUNT, HOLES PROVIDED				X		
21	4		5/8"-11NC x 3" LG HHCS	ST STL					
22	7		3/4"-10NC x 1 1/2" LG HHCS	"					
23	4		3/8"-16 NC x 1" LG HHCS W/NUT	"					
24	16		3/8"-16 NC x 2 1/2" LG HHCS W/NUT	"					
			(8) OF ABOVE TO HAVE WIRE HOLE						

S.O.	NO.	NO. REQ'D.	TITLE: BROKE CONVEYOR ASS'Y.	B.M. No.	REV.	PROD.
			CUSTOMER: / ISSUED BY:	BM- D- 9279	D	
			LC.— / SHEET OF			INV.

ITEM NO.	QUAN.	TOTAL QUAN.	DESCRIPTION	DRAWING NO.	S.	P.O.	VENDOR	
1	1		5 HP 1750 RPM MOTOR; 184T FRAME					PROC.
			T.E.F.C. 220/440 VOLT 3 PHASE		X			
			60 HZ		X			ACCT.
2	1		FALK #2203UF25 FLANGE MOUNT					
			REDUCER 25:1 RATIO W/ 1 15/16 Ø BUSHING		X			PURCH.
3	1		FALK #M2203-1 EQUI-POISED					
			MOTOR MOUNT		X			ENG.
4	1		DODGE TAPER-LOCK SHEAVE 5.0" P.D.					PROD.
			(2) GROOVES, "A" BELTS W/ #1610 BUSHING		X			REC.
			1 1/8" Ø BORE STD. K.W.		X			
5	1		DODGE TAPER-LOCK SHEAVE 7.0" PD					S.O.F.
			(2) GROOVES, "A" BELTS W/ #2517 BUSHING		X			
			1 3/8" Ø BORE STD K.W.		X			
6	2		#A-68 V-BELT					
7	1		DODGE TAPER-LOCK STEEL CONVEYOR					
			PULLEY; CROWN FACE; 12" DIA. x 38 FACE					
			HUB #F25 1 15/16" Ø BORE STD K.W.		X			
8	1		DODGE TAPER-LOCK STEEL CONVEYOR					
			PULLEY; CROWN FACE 6" DIA. x 38" FACE					
			HUB #F25 1 7/16 Ø BORE STD K.W.		X			

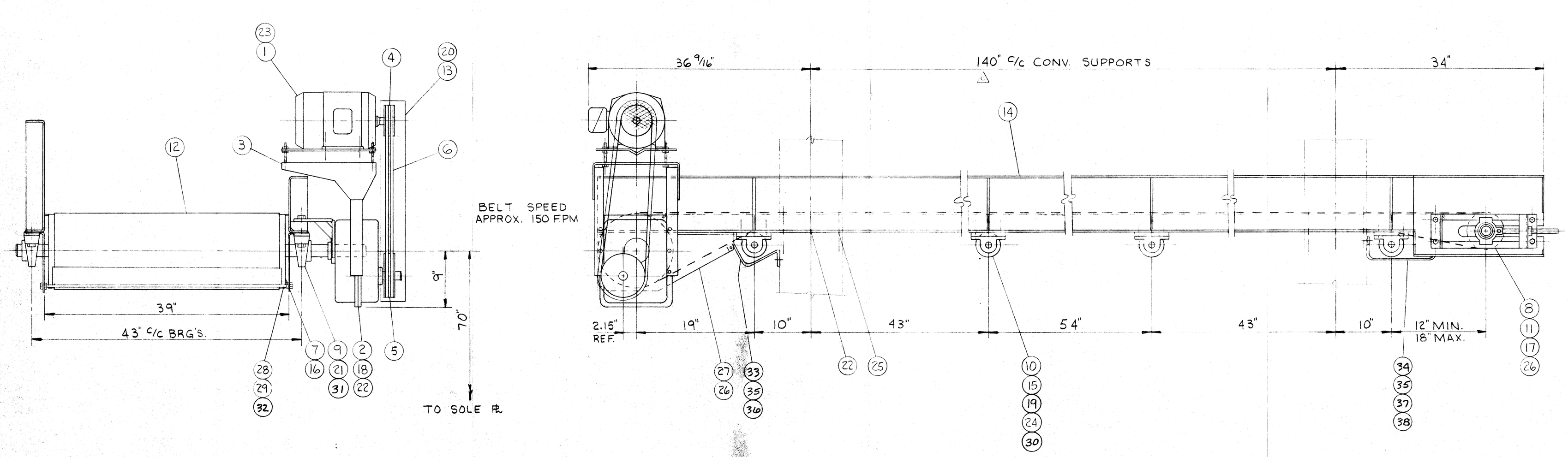

6-20-86 MRS	ADDED WIPER & GUARDS ITEMS 32-38	
5-16-86 RDS	140" C/C WAS 142", BELT WAS 35'-4"	
5-14-86 RDS	TAKE UP FRAME WAS #550 x 6	
3-20-86 MRS	FINISHED DWG.	
	REVISIONS	

THIS DRAWING AND ITS CONTENTS ARE THE PROPERTY OF LG IND. AND MAY NOT BE REPRODUCED WITHOUT PERMISSION

MACHINING TOLERANCES UNLESS OTHERWISE SPECIFIED
FRAC. DIM. ± 1/32" ANGLES ± 1/2°
DEC. DIM. X.XX ± .020" √=125 FINISH BREAK ALL SHARP EDGES
DEC. DIM. X.XXX ± .005"

LG INDUSTRIES INC. COATESVILLE, PA 19320 U.S.A.

FOR ASS'Y. SEE DWG.

BROKE CONVEYOR FOR 2ND PRESS

SCALE: 1 1/2" = 1'-0"	DWN. BY: RDS	DRAWING NO.	REV.
RGH. WT.:	DATE: 2-26-86	D- 9279	D
FIN. WT: 2057	CHK'D. BY: MRS		

JUN 3 0 1986