Rolls-Royce

Technical data:	B32:40 L9A 2.	Drawing No.:	L1139/32
Fuel type:	MDO	Project No.:	314010
Application:	Marine Auxiliary	Engine No.:	16364-7
		Yard/Power plant:	Kawasaki HI hull 1724

Engine data:		
Number of cylinders	-	9
Cylinder bore	mm	320
Piston stroke	mm	400
Rated power (MCR), engine	kW	4320
Rated active power, generator	kW	4190
Generator efficiency	-	0,97
Rated output, electric with COS(phi) = 0,8	kVA	5235
Mean effective pressure	bar	24,9
Rated speed	RPM	720
Mean piston speed	m/s	10
Displacement	l	289
Fuel oil data:		
Specific fuel consumption	g/kWh	183
Fuel consumption at MCR	l/h	955
Fuel feed pump capacity	l/h	4030
Daytank, 24hrs operation	m³	23
Nozzle oil data:		
Nozzle oil	-	SAE 40
Pressure normal (+- 0,2)	barg	2.0
Alarm, pressure low	barg	1.0
Temp, normal (+- 5)	°C	90
Start air data:		
Start air pressure, max./min.	barg	30/20
Air consumption per. start	m³n	2
No of starts, 500l receiver	-	4
No of starts, 250l receiver	-	2
Lubrication data:		
Lubrication oil	-	SAE 40
Main pump capacity	m³/h	65
Priming pump capacity	m³/h	13
Lub. oil pressure		
-normal	barg	4-5
-alarm, pressure low	barg	2,5
-shut-down, pressure low	barg	1,7
Lub. oil temp engine inlet		
-normal	°C	60
-alarm, temp high	°C	70
Spec. lub. oil consumption	g/kWh	0,8
Lub. oil consumption	kg/h	3,5
Crankcase, lub. oil volume		
-high level	l	4500
-low level	l	3850
Jacket water waste heat recovery:		
Waste heat, 100% load	MJ/h	4685
Waste heat, 80% load	MJ/h	3395
Waste heat, 50% load	MJ/h	1800

Cooling water data:		
Two-stage charge air cooler:		
-Low temp. stage:		
-temp. at inlet, max	°C	37
-water flowrate, normal	m³/h	50
-water flowrate, max	m³/h	58
-High temp. stage:		
-water flowrate, normal	m³/h	36
Jacket water system:		
-pump capacity	m³/h	81
-normal stop/shut-down	barg	1.0
-water quantity, engine block	l	370
-Temp. at engine outlet		
-normal	°C	90
-alarm, temp. high	°C	95
-shut-down, temp. high	°C	98
-temp. rise in engine, max	°C	7,1
-incl. high temp. ca-cooler	°C	13,8
-Expansion tank:		
-volum, single-engined	l	300
-volum, multi-engined	l	500
-height above engine	m	3-10
Air data:		
Turbocharger type	ABB	TPL-67C33
Charge air cooler type	-	RR9L3240B
Air consumption	m³n/h	22600
Air consumption	kg/h	29300
Charge air pressure	barg	3,2
Charge air temperature:		
-normal	°C	55-60
-alarm, temp high	°C	65
Turbocharger speed alarm	rpm	29216
Exhaust data:		
Mass flow	kg/h	30100
Volume flow, after turbin	m³/h	51600
Temp, after cylinder	°C	375
Temp, after turbine	°C	325
Back pressure, max	mmWG	300
Part load data:		
-Mass flow, 90% load	kg/h	27800
-Temp, after turbine	°C	320
-Mass flow, 80% load	kg/h	25200
-Temp, after turbine	°C	320
-Mass flow 50% load	kg/h	16100
-Temp, after turbine	°C	355
Heat dissipation:		
Lubrication data:		
Lub. oil .cooler	MJ/h	1855
Cooling water data:		
Low temp. stage	MJ/h	2890
High temp. stage	MJ/h	2295
Jacket water cooler:		
-Heat dissipation, engine	MJ/h	2390
-incl. high temp. ca-cooler	MJ/h	4685
Ventilation data:		
Radiation engine	MJ/h	525
Radiation generator (IP23)	MJ/h	470

Engine power definition is according to ISO 3046-1
However the engine ratings are valid for the following reference conditions:

Air inlet temperature	max. 45 °C
Air inlet temperature	min. 0°C
Charge air low temp. fresh water inlet temp.	max. +37°C
Relative humidity	60%

Specific fuel oil consumption is measured on testbed according to ISO 3046-1, using diesel-oil with a net heating value of 42.7 MJ/kg and no engine-driven pumps. With engine-driven pumps, add 1g/kWh for each pump.
Spec. lub. oil consumption is for guidance only.

NOTE! Due to continuous development, some data may change.

NOx according to Tier 2 of Annex VI of MARPOL 73/78

JFN - 17.01.2014

COPY・工事用使用不可

1 PERFORMANCE DATA (Calculated values)

TYPE

Type designation: AMG 0900SM10 LSE

RATINGS

Output:	5238	kVA	Direction of rotation		
Duty:	S1		(Facing drive end):	CCW	
Voltage:	6600	V	Weight:	20000	kg
Current:	458	A	Inertia:	1140	kgm^2
Power factor:	0,80		Protection by enclosure:	IP44	
Frequency:	60	Hz	Cooling method:	IC8A1W7	
Speed:	720	rpm	Mounting arrangement:	IM1101	
Overspeed:	864	rpm			

STANDARDS

Applicable standard:	IEC
Marine classification:	DNV Offshore
Hazardous area classification:	None
Temperature rise stator / rotor:	F/F
Insulation class:	F

ENVIRONMENTAL CONDITIONS (max. values)

Ambient temperature:	55	°C	Altitude:	1000	masl
Coolant temperature:	37	°C			

ASSUMED DATA

Driving equipment:	Not Specified
Approx. mech. power:	4325 KW

EFFICIENCY in %, not guaranteed values

load:		110 %	100 %	75 %	50 %	25 %
Efficiency @ power factor	0,80	96,94	96,90	96,59	95,71	92,67
Efficiency @ power factor	1,00	97,82	97,77	97,49	96,75	94,24

REACTANCES in %

XD (U):	143,9	XD' (S):	23,4	XQ'' (S):	16,1	X0 (U):	9,0
XQ (U):	77,9	XD'' (S):	14,2	X2 (S):	15,1	XP (S):	19,3
X1 (U):	11,3	(S) = Saturated value, (U) = Unsaturated value					

TIME CONSTANTS (SEC.) AT 75 °C

TD0':	2,832	TD':	0,507	TQ0'':	0,1457	TA:	0,103
TD0'':	0,02871	TD'':	0,01815	TQ'':	0,0331		

RESISTANCES AT 20 °C

Stator winding:	0,0293	Ω	Field winding:	0,5092	Ω
Excitation winding:	7,9	Ω			

COPY • 工事用使用不可

SHORT CIRCUIT

Short circuit ratio:	0,79	
Sustained short circuit current:	1,8	p.u. (rated excitation)
	> 3.0	p.u. (voltage regulator)
Sudden short circuit current:	3250	A (symmetric RMS)
	8250	A (peak value)

VOLTAGE VARIATION

Maximum allowed amount of starting load:

Maximum voltage drop	Power factor	Load	
15 %	0.1	3150	kVA
15 %	0.4	3400	kVA
15 %	0.8	5450	kVA
20 %	0.1	4400	kVA
20 %	0.4	4800	kVA

Voltage drop at sudden increase of rated load:	14	%
Voltage rise at sudden drop of rated load:	19	%

REACTIVE LOADING

Steady state reactive loading at rated excitation:	4250	KVAR (lagging)
Steady state reactive loading at zero excitation:	2850	KVAR (leading)

TORQUE

Rated load torque (Calculated of rated output in kVA): 69500 Nm

The peak values of sudden short circuit air gap torques:
2-phase short circuit: 880 % 3-phase short circuit: 640 %

BEARINGS

D-end: Sleeve, flood lubricated, locked N.D-end: Sleeve, flood lubricated, free

Inclination

Fore-Aft static:	5	Degrees	Fore-Aft dynamic:	7,5	degrees
Athwards static:	15	Degrees	Athwards dynamic:	22,5	degrees

D-end bearing oil flow:	14,0	liter / min	N.D-end bearing oil flow:	4,5	liter / min
Oil viscosity:	ISO VG 68				

HEAT EXCHANGER

Mounting:	Top		Coolant inlet direction:	Left	
Coolant flow:	19	m^3/hour	Heat dissipation in air:	7	kW
Coolant temperature rise:	7	K	Heat dissipation in coolant:	127	kW

TERMINAL CONNECTIONS (Defined facing drive end)

Direction of main connection:	Right down
Direction of zero connection:	Left down

COPY・工事用使用不可

EXCITATION

	Exciter field			
No load:	3,5	A	34,9	V
Rated load:	7,3	A	73,5	V

OTHER

Stored energy constant (rotational energy divided by rated effect):	0,62	s
Earth capacitance (1-phase):	0,11	µF

COPY・工事用使用不可

COPY・工事用使用不可

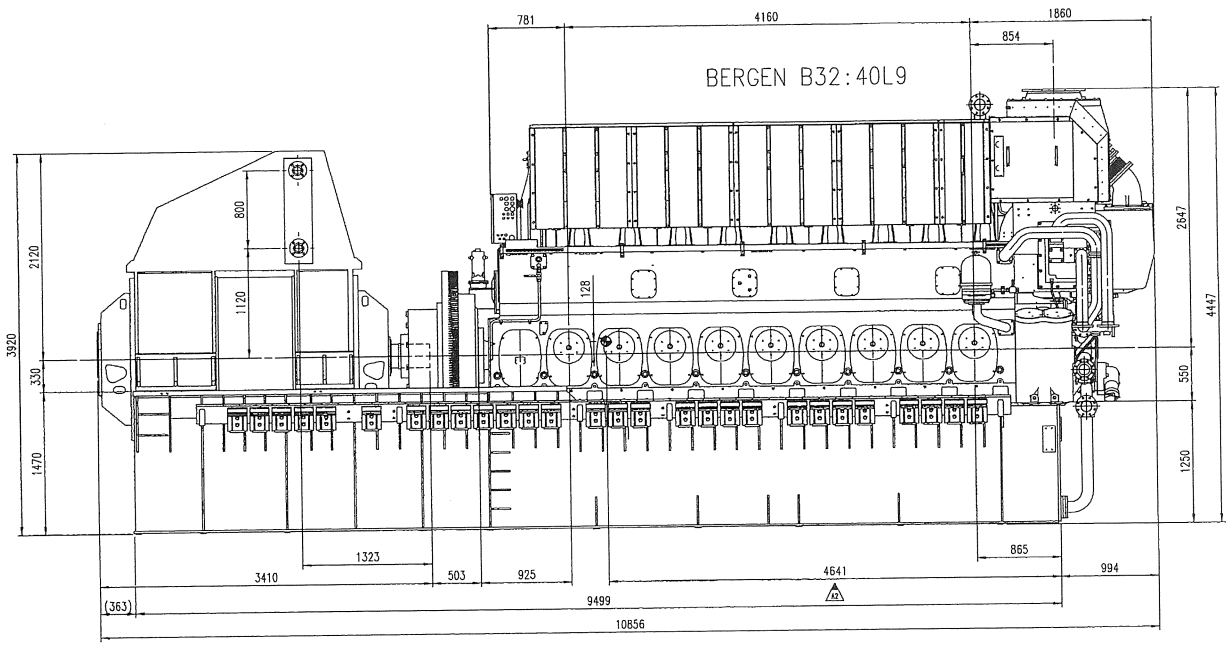

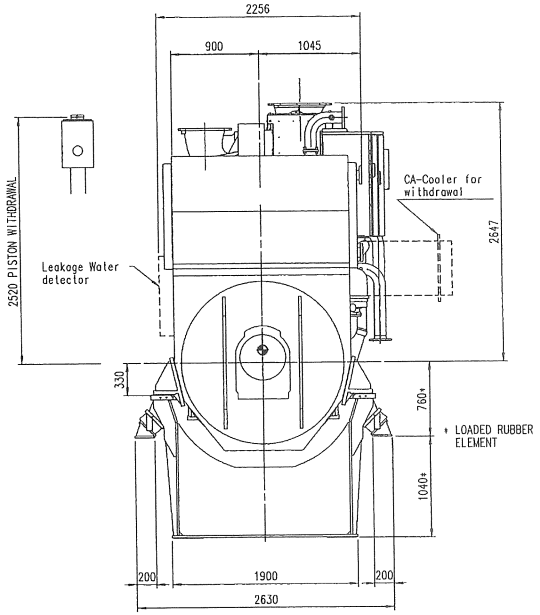

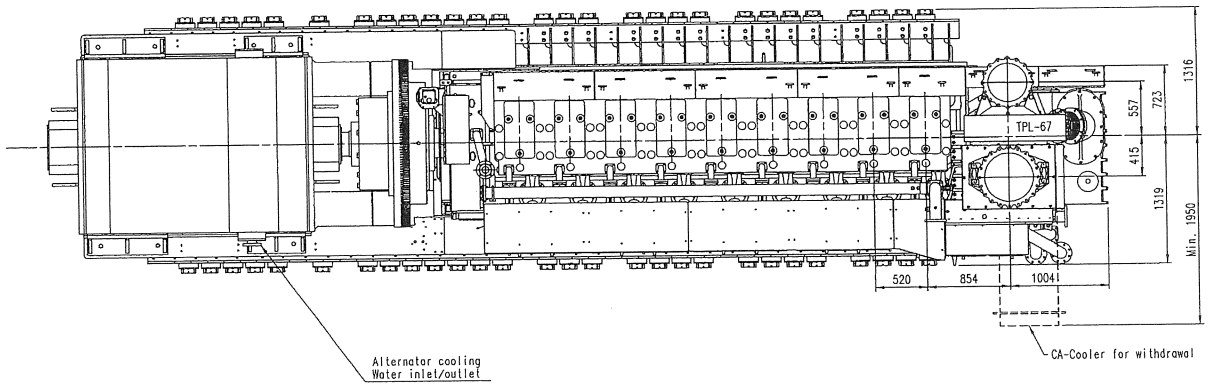

* DIMENSIONS, WEIGHTS AND CENTRE OF GRAVITY ON THIS DRAWING IS BASED ON A AMG 0900SM10 LSE ALTERNATOR

⊕ - CENTRE OF GRAVITY. DRY ENGINE

RECOMMENDED FREE SPACE 1000 mm AROUND ENGINE. FOR MAINTENANCE

DRY ENGINE, incl. FOUNDATION W/FLEX. MOUNTING....APPROX:	63 200 KG
ALTERNATOR AMG 0900 SM10 LSE.....:	20 000 KG
FLEXIBLE COUPLING.....:	1 116 KG
TOTAL WEIGHT DRY ENGINE.....APPROX.:	84 315 KG
OIL AND WATER.....:	4 125 KG
TOTAL WEIGHT OPERATIONAL CONDITION.....APPROX.:	88 440 KG

The copyright of these drawings and of all measures which are contained in a patent or a very always remain the property of our firm.They must not be copied or distributed nor shown to or placed at the disposal of third persons with out our written consent.

Rev. E	Rev. D	Rev. C	Rev. B	Rev. A2	Issue:	Original
				LSVa	Sign.:	LSVa
				240914	Date:	140614
				CRa	Check.:	slsu
				EW	Appr.:	AGa

Engines Bergen

Scale 1:25 A1

Type: B32:40L9A
XLS no.: 3705
Replaced by:
Replaces:
Ref.: B1137/91

Rolls-Royce

Title: GENERATING SET MAIN DIMENSION

Drawing no.: B1147/51