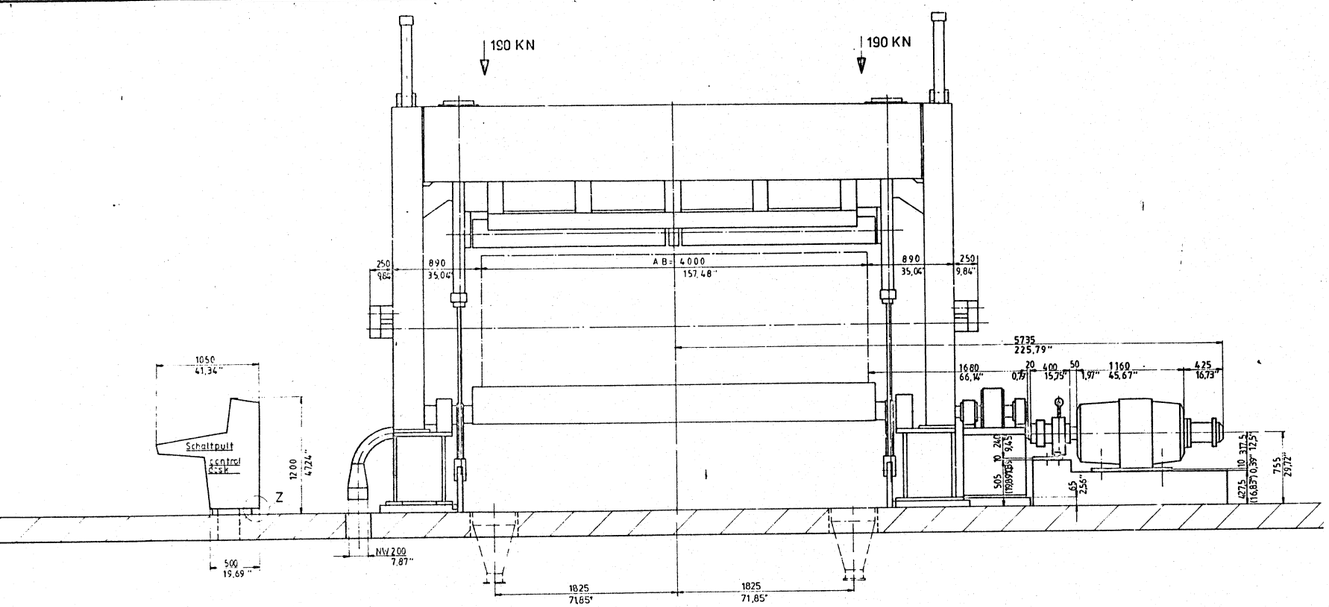

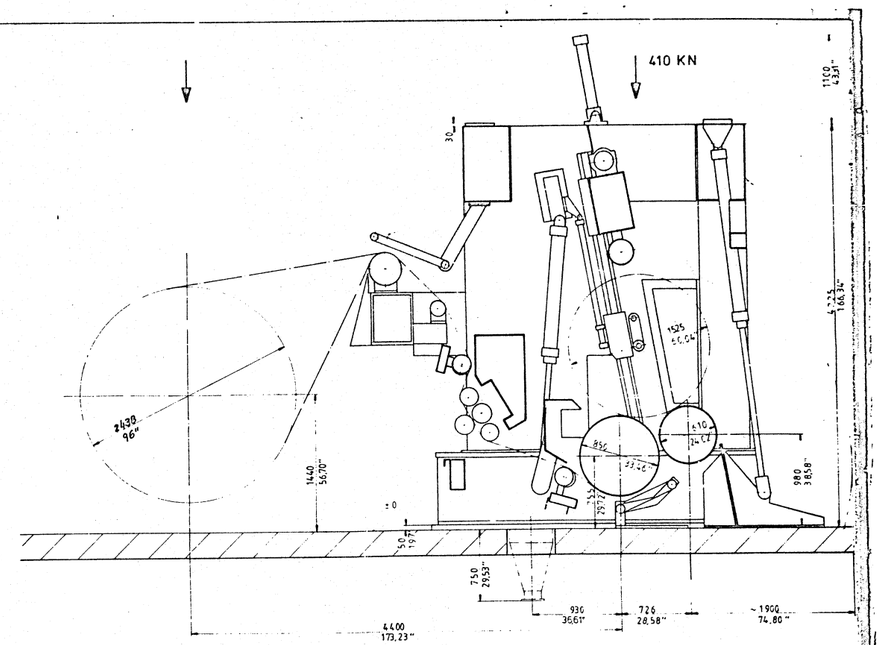

Belastungsangaben inklusive der Papierrollengewichte
Loads stated inklude weights of paper roll

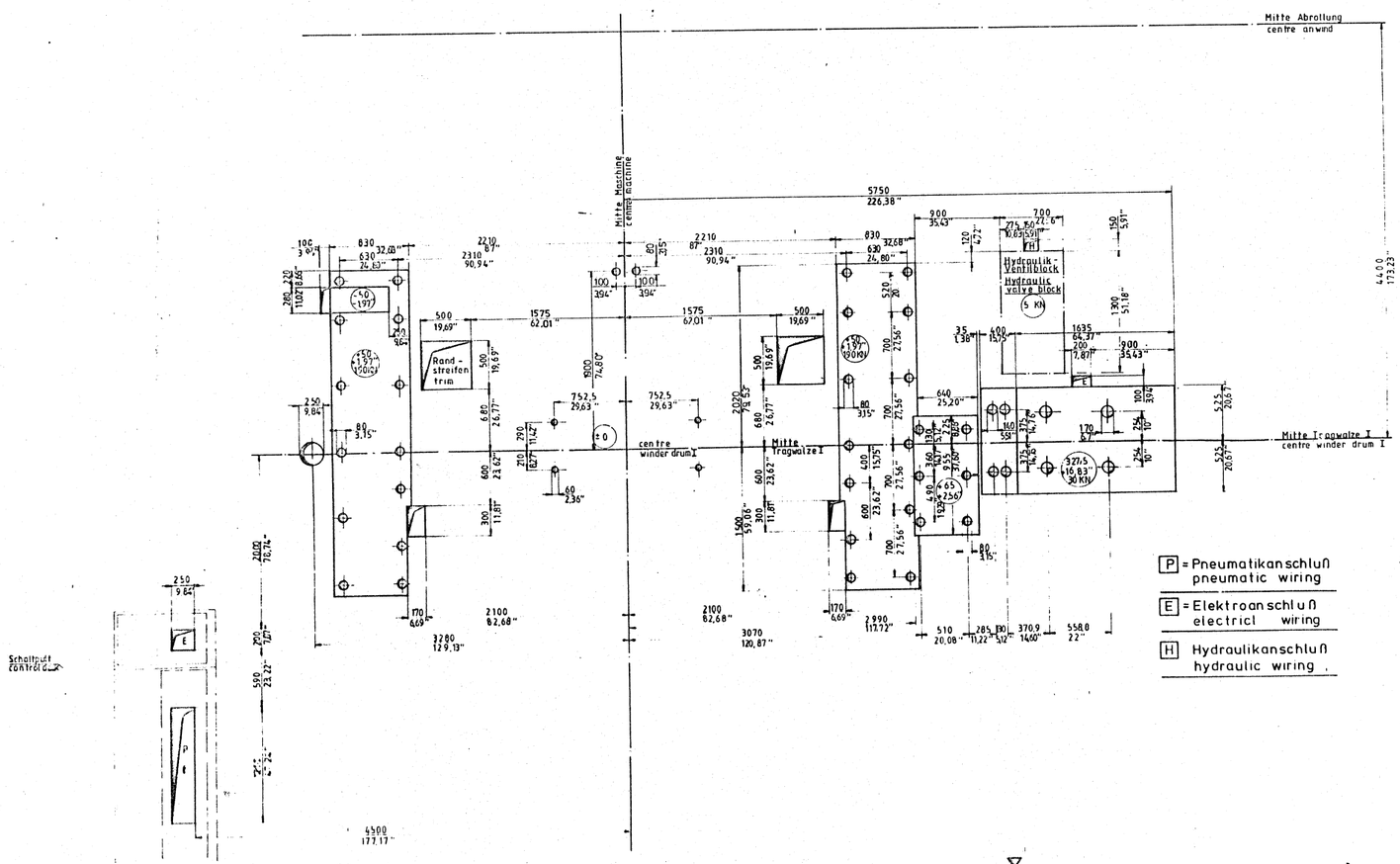

P = Pneumatikanschluß
pneumatic wiring

E = Elektroanschluß
electricl wiring

H Hydraulikanschluß
hydraulic wiring

Examples for foundation work

a foundation

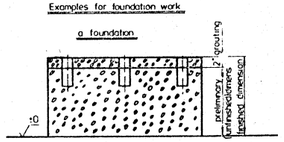

b pit

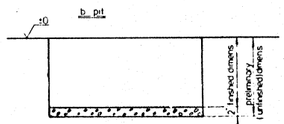

foundamentation
control desk

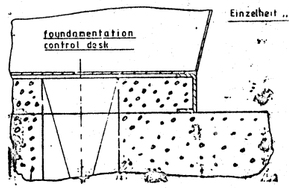

Einzelheit „Z"

	d	x
Überstand „X" der Ankerschrauben über Fundamentfertighöhe	M 20	120 4,72"
Anchor bolts must extent „X" above finished foundation height	M 30	120 4,72"

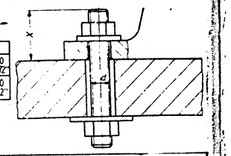

STONE SCREW DIN 528

TYPE	DEPTH	
CM 12 x 150	150	55
CM 16 x 200	200	70
CM 20 x 250	250	85
CM 24 x 300	300	100
CM 30 x 400	400	120
CM 36 x 500	500	140

FOUNDATION BLOCK DIN 799

TYPE	DEPTH	
M 12 x 52	220	110
M 16 x 80	250	125
M 20 x 200	270	140
M 24 x 250	330	170
M 30 x 250	350	190

DIMENSIONS OF THE FOUNDATION BLOCKS

STONE BOLTS WITH SPECIAL HEADS

THICKNESS OF BRIDGE

he furnished by customer

Base block unwind			
Brake generator unwind			
Emergency brake unwind			
Top knife beam	2	Anchor bolt	M16
Belt drive	6	Anchor bolt	M 30
Emergency brake rewi	4	Foundation block	M 20×200 DIN 799
Motor rewind	-	Foundation block	M 24×250 DIN 799
Threading tapes rewind	4	Anchor bolt	M 20
Base block rewind	26	Anchor bolt	M 30

A.
B.
C.

Foundation Specifications

L.
E. Use non-shrinking concrete
F. Foundation heights shown are finished dimensions
G.
H. 4 x 25
Base foundations on solid ground
J. Proper dimensioning of the floor is customer's resp. on-site

Kom. 30.23682

Code word THREE RIVERS I

Trim width AB = 4000

Kanten an Bearbeitungsflächen 0,2 mm entgratet	zul. Allgemein Toleranzen nach JW 055	Gew. (kg)	Werkstoff Halbz.-Rohm.-Nr.
	1987 Datum	Name	Benennung Foundation plan
	Bearb. 20.07.	Urban	Kurzzeichen VARI STEP 6,5
	Gepr.		Sachnr. 05 20
	Freig.		CH. Kz. 38
	Maßst. 1:20		DK 301 P 4857
20.2.87 Ute	Jagm		