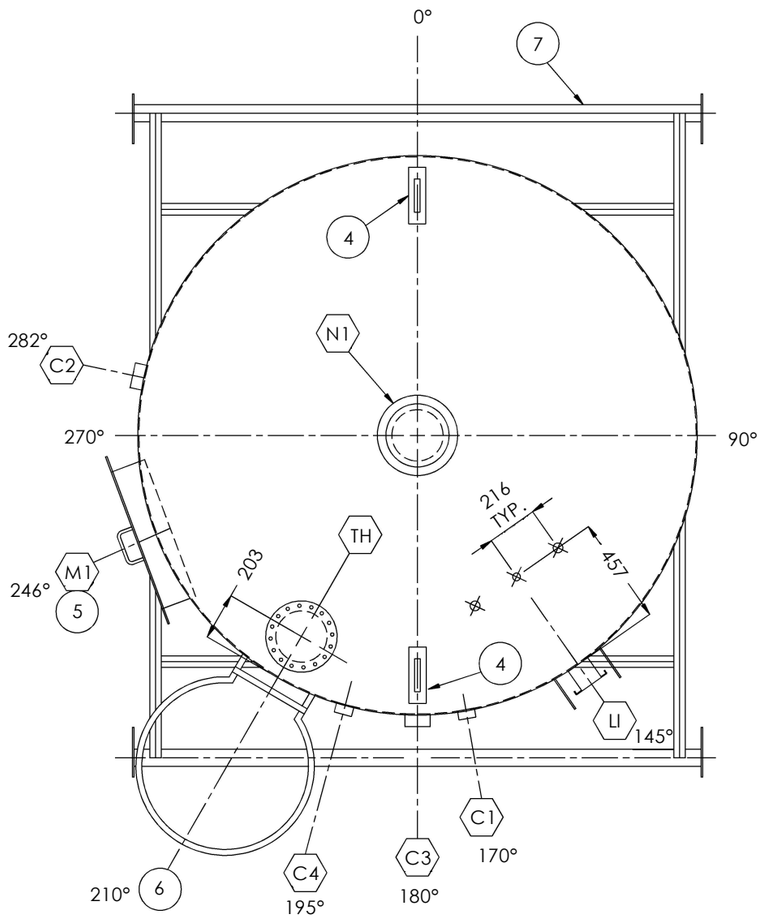

ORIENTATION

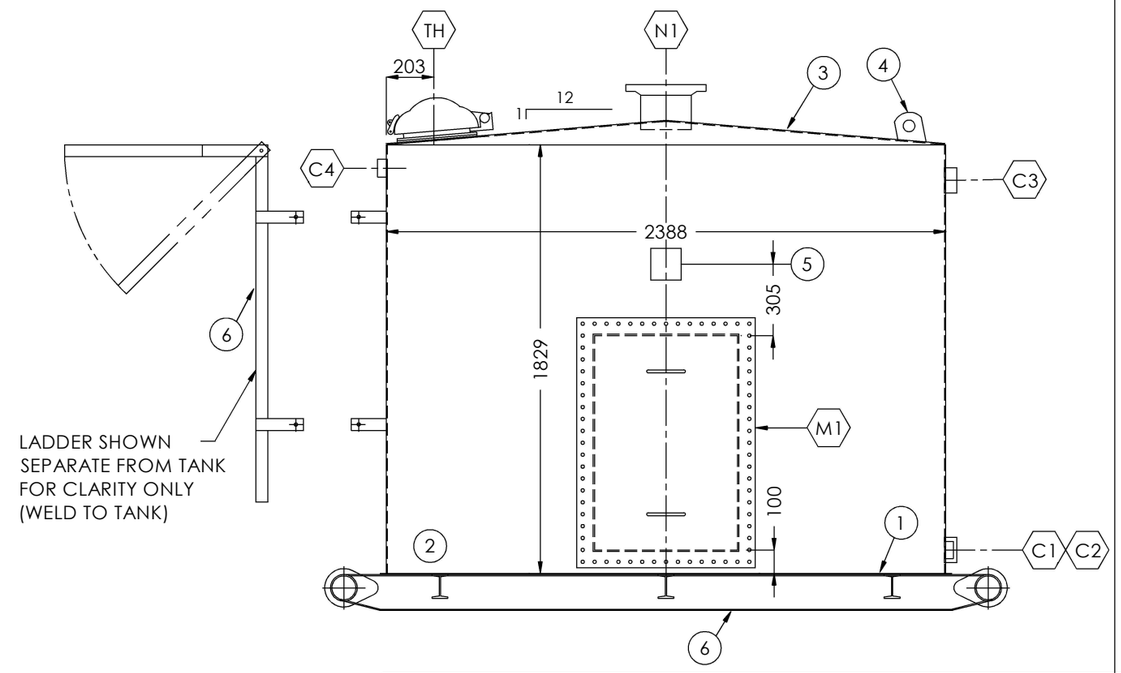

NOZZLES

MARK	PROJ.	ELEV.	NOTES
C1	N/A	100mm	INLET
C2	N/A	100mm	DRAIN
C3	N/A	1677mm	OVERFLOW
C4	N/A	1729mm	HLSD
N1	152mm	ROOF	VENT

DESIGN NOTES

1. TANK TO BE BUILT AND TESTED TO API-12F SPEC. MODIFIED (NON LABELED)
2. TANK TO BE AIR/SOAP LEAK TESTED TO 1.5 PSI
3. ROOF/SHELL JOINTS NOT TO BE BACKWELDED TO MEET API-2000 SPECS
4. ESTIMATED SHIPPING WEIGHT = 1200 KG. (2645 LBS.)
5. REFER TO ORIENTATION DRAWING FOR PROPER LOCATION OF ALL NOZZLES, COUPLINGS, ETC.
6. ALL DIMENSIONS ARE IN mm.

INTERNAL & EXTERNAL FINISH

1. INTERNAL FINISH

NO INTERNAL FINISH

2. EXTERNAL FINISH (TANK & SKID)

BLAST: SSPC-SP7 BRUSH BLAST
PRIMER: 1.5 - 2.0 MILS DFT OF CLOVERDALE RUSTEX #71024 (GREY).
PAINT: 1.5 - 2.0 MILS DFT CLOVERDALE CC425 ARGO GREY MARINE ENAMEL

3. BOTTOM FINISH

NO INTERNAL FINISH

REVISIONS

NO.	DESCRIPTION	BY	DATE
0	ISSUED FOR FABRICATION	CY	04.02.08

BILL OF MATERIALS

MARK	QTY	MAT'L	DESCRIPTION	SERVICE
1	1	A36	4.8 PL. x 2438 DIA. FLAT BOTTOM	
2	1	A36	4.8 PL. x 1829 x 7502 LG. SHELL	
3	1	A36	4.8 PL. x 2407 DIA. CONED ROOF	
4	2	A36	ROOF MOUNTED SMALL LIFT LUGS c/w REPAD	
5	1	A36	NAMEPLATE AND BRACKET	
6	1	A36	ARGO STD. 50 BBL LADDER & **FOLDING** SAFETY HOOP	
7	1	A36	50 BBL FLAT SKID **(SEE SHT. B-6698-703_SK FOR DETAILS)**	
M1	1	A36	610x914 (24"x36") RECT. MANWAY	
			(SET 100mm ABOVE FLOOR)	
LI	2	A105	42 DIA. (1-1/4") 3000# NPT FULL CPLG	
	1	A105	33 DIA. (1") 3000# NPT FULL CPLG	
	1		ARGO STANDARD SERVICE LEVEL GAUGE c/w METRIC LEVEL	
			GAUGE BOARD	
TH	1		219 DIA. (8") ENARDO 330 SWEET SERVICE	
			SET @ 16 OZ. PRESS./ 0.4 OZ. VAC	
C1	1	A105	60 DIA. (2") NPT REC LINE HALF CPLG	INLET
C2	1	A105	89 DIA. (3") NPT REC LINE HALF CPLG	DRAIN
C3	1	A105	89 DIA. (3") NPT REC LINE HALF CPLG	OVERFLOW
C4	1	A105	60 DIA. (2") NPT REC LINE HALF CPLG	HLSD
N1	1	A105	219 DIA. (8") 150# RFSO FLG.	VENT
	1	A106	219 DIA. (8") SCH STD. SMLS x 176 LG.	

CUSTOMER: ARGO SALES LTD.

TITLE:

ONE (1) 8 CU. M. (50 BBL)
1829 x 2388 HIGH
SKIDDED STORAGE TANK

APPROVED BY:	CHECKED BY:	DRAWN BY: CY	
DATE: 04/02/08	TAG #: -	DRAWING#: B-6698-703	REV. 0
SHEET: 1 OF 2	SCALE: NTS	SERIAL#: **6698-703**	

ARGO SALES LTD

ARGO SALES LTD.

CUSTOMER:

50 BBL SKIDDED STORAGE TANK

TITLE:

QUOTE #: -

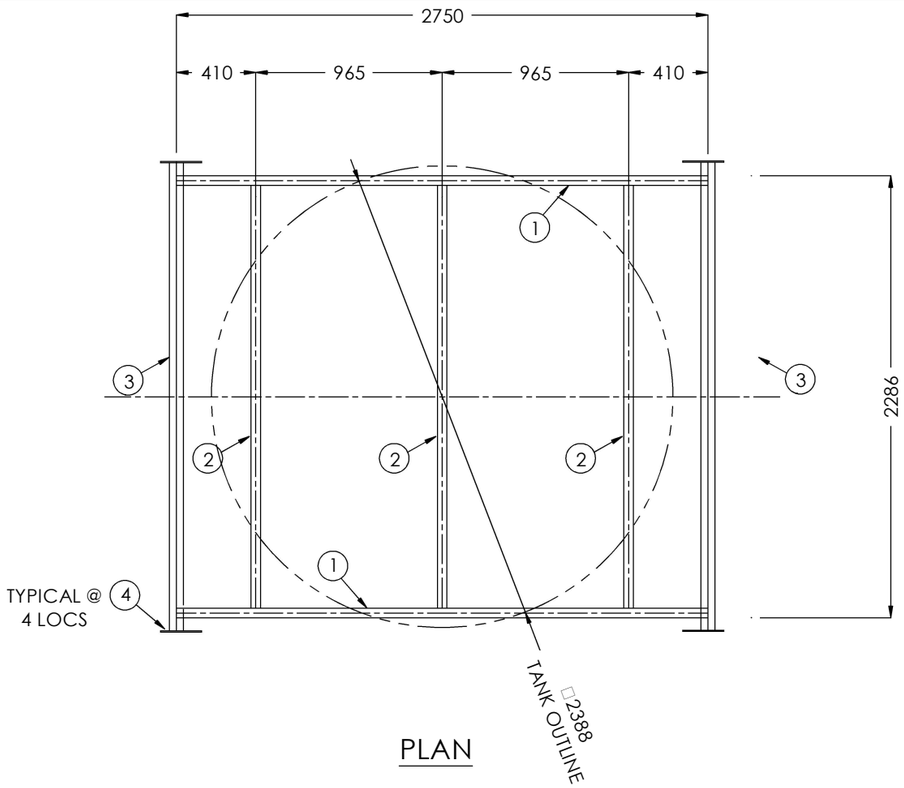

PLAN

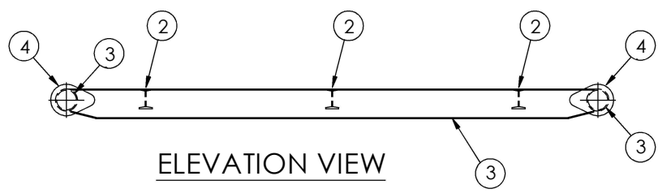

ELEVATION VIEW

BILL OF MATERIALS

MARK	QTY	MAT'L	DESCRIPTION	SERVICE
1	2	A36	C6 x 8.4# CHANNEL IRON x 2750 LONG	MAIN GIRDERS
2	3	A36	S4 x 7.7# I-BEAM x 2188 LONG	
3	2	A53B	89 DIA. (3") COMMERCIAL GRADE PIPE x 2434 LONG	
4	4	A36	TEARDROPS FOR 89 DIA. (3") ROLL BAR	

NOZZLES

MARK	PROJ.	ELEV.	NOTES

DESIGN NOTES

1. ESTIMATED SHIPPING WEIGHT = 430 LBS. (195 KG)
2. ALL DIMENSIONS ARE IN mm.

INTERNAL & EXTERNAL FINISH

1. SKID FINISH

BLAST: SSPC-SP7 BRUSH BLAST USING SIL 7 SAND
PRIMER: 1.5 - 2.0 MILS DFT OF CLOVERDALE TOWER OR RUSTEX #71024 GRAY
PAINT: 1.5 - 2.0 MILS DFT OF CLOVERDALE ARGO GRAY CC425
MARINE ENAMEL

REVISIONS

NO.	DESCRIPTION	BY	DATE
0	ISSUED FOR FABRICATION	CY	04.02.08

CUSTOMER: ARGO SALES LTD.

TITLE: 50 BBL SW TANK SKID

APPROVED BY:		CHECKED BY:	DRAWN BY: CY
DATE: 04/02/08		TAG #: ---	DRAWING #: B-6698-703_SK
SHEET: 2 OF 2		SCALE: NTS	SERIAL #: **6698-703**

REV. 0

ARGO SALES LTD

ARGO SALES LTD.

CUSTOMER:

50 BBL SW TANK SKID

TITLE:

QUOTE #: