ORIGINAL

NWP INDUSTRIES INC.
Total oilfield supply.

Project Data List
Work Orders 08784

Project Coordinator : Gavin Hull

Sales Rep : Brent Warner

Date: Aug 27, 2013

Quote Reference: #1452 Rev 3

Client: **Apache Canada c/o**
Genivar Engineering
805-1331 Macleod Trail SE
Calgary, Alberta

Contact: Keith Harty
Email: keith.harty@genivar.com
Phone: 403-355-3618

Customer P.O.: 4500078409,
4500078415 & 4500078416
08784-002/003/004

8784-004 NOV 04 2013

APACHE Dual Separator Package

GENERAL DESCRIPTION

Quantity	Description
4	**2-Phase, Sour Service, Separator Package, New**

- 24" x 7'-6" 720-PSIG MAWP Vertical Separator
- 36" x 10'-0" 720-PSIG MAWP Vertical Separator
- 8 expandable to 10 inlet Test Header
- Group and Test Header Lines c/w 8 Inlets
- Pig Receiver, 6"
- Delivery: Late June 2013 first unit, each subsequent unit 2 weeks thereafter

ORIGINAL

08784-004 NOV 04 2013

1.0 VESSELS

1.1 GENERAL DESCRIPTION

Tag #: V-110

- 24" OD x 7'-6" SM/SM
- 3 Phase Vertical design (dressed 2 phase)
- 720-PSIG MAWP
- RT-1 Full Radiography
- 100°F Design Temperature
- CRN: Alberta, British Columbia, Saskatchewan
- M.D.M.T. -20°F @ 720 psig
- 1/8" C.A.
- Inlet Deflector & Float Baffle
- 6" thick x 9 lbs/ft3 Mistex 316SS
- Skirt and baseplate

1.2 VESSEL CONNECTIONS

N1	**Gas Inlet:**	3" NPS 300# RF Flange
N2	**Gas Outlet:**	3" NPS 300# RF Flange
N3	**Drain**	2" NPS 300# RF Flange
C3	**Oil Level Control:**	2" NPT TOL
C4	**Water Level Control:**	2" NPT TOL
C5	**Condensate Outlet:**	2" NPS 300# RF Flange
C6	**Water Outlet/Inspect:**	2" NPS 300# RF Flange
C7	**Relief Valve Outlet:**	2" NPS 300# RF Flange
C8	**HLSD:**	2" NPT TOL
C10a/b	**Oil Gauge Glass:**	¾" NPT TOL
C11a/b	**Water Gauge Glass:**	¾" NPT TOL
C12	**Temperature Indicator:**	¾" NPT TOL
C13	**Pressure Indicator:**	½" NPT TOL
C14	**Inspection:**	2" NPT TOL

Tag #: V-120

- 36" OD x 10'-0" SM/SM
- 3 Phase Vertical design (dressed 2 phase)
- 720-PSIG MAWP
- RT-2 Full Radiography
- 100°F Design Temperature
- CRN: Alberta, British Columbia
- M.D.M.T. -20°F @ 720 psig
- 1/8" C.A.
- Inlet Deflector & Float baffle
- 6" thick x 9 lbs/ft3 Mistex 316SS
- Skirt and Basepiate

ORIGINAL

8784-004 NOV 04 2013

1.3	**VESSEL CONNECTIONS**	
N1	**Gas Inlet:**	6" NPS 300# RF Flange
N2	**Gas Outlet:**	6" NPS 300# RF Flange (side of the vessel)
N3	**Drain:**	2" NPS 300# RF Flange
C3	**Oil Level Control:**	2" NPT TOL
C4	**Water Level Control:**	2" NPT TOL
C5	**HLSD:**	2" NPT TOL
C6	**Oil Outlet:**	3" NPS 300# RF Flange
C7	**Water Outlet:**	3" NPS 300# RF Flange
C9	**PSV/Inspection:**	3" NPS 300# RF Flange
C10a/b	**Oil Gauge:**	¾" NPT TOL
C11a/b	**Water Gauge:**	¾" NPT TOL
C12	**Temperature Indicator:**	¾" NPT TOL
C13	**Pressure Indicator:**	½" NPT TOL
N14	**Inspection**	4" NPS 300# RF Flange

2.0 PIPING

Separator(s) are packaged for 2 phase service as follows:

- Inlets to Group Line – (8) + (2) Future 3" ANSI 300# RF Flange.
- Test Header Line / Inlet to Separator - 3" ANSI 300# RF Flange. 10 inlets total
- Inlet to Test Separator – 3" ANSI 300# RF Flange.
- Inlet to Group Separator – 4" ANSI 300# RF Flange
- Group (Pigging) Header - 4" ANSI 300# RF Flange. (10 Inlets total)
- Gas Outlet Test Separator – 2" ANSI 300# RF Flange combine with Group Separator Inlet
- Gas Outlet Group Separator – 3" ANSI 300# RF Flange to skid edge
- Test Separator Liquid Outlet – 2" ANSI 300 RF Flange c/w 1" NPT w/ Prover Ports and 1" LCV and 2" basket Strainer
- Group Separator Liquid Outlet –3" ANSI 300# RF w/ 2" ANSI 300# RF Prover Ports and 2" LCV and 3" basket Strainer
- Relief Outlet - 1" NPT (Test), 2" ANSI 300/150 (Group), 3" Common PSV header.
- Pig Receiver – 6" Barrel x 4" Inlet, ANSI 300# RF Quick Opening Closure
- Drain - 2" NPT
- Level Gauge drains tubed to Drain Line.
- All piping to skid edge

3.0 INSTRUMENTATION

Tag #	Quantity	Description
BH 117	**(1)**	**Building Heater – Ruffneck** Model FX5-480360-35-WT Electric Heater 35 kW, 480 volt w/ thermostat Wiring by others
BPCV 1107	**(1)**	**Control Valve – Samson**

ORIGINAL

BPY 1107		Type 3241 Control Valve, size 2" CL300 RF, body A 216 WCC, seat and plug 316 SS, Cv20, characteristic =%, shutoff class IV, travel 15mm, standard bonnet, packing PTFE-standard mounts with, **Samson Type 3277 Pneumatic Actuator**, size 350, spring range 12-36 psig, travel 15mm, spring force extends actuator stem for fail close action, diaphragm NBR **Samson Type 3730-2 Positioner**, intrinsically CSA/FM version Expert plus diagnostics with all diagnostic functions, reference variable 4-20 mA with 2 software limit switches, 1 fault indication output, hardware version index 01, software version 1.54 Vent O/S **Samson Type 4708 Pressure Regulator**, c/w air filter in plastic housing and pressure gauge set point 8-90psi (0.5-6bar), air connections ¼" NPT
ESDV 1200 **SCV-1200** **PY-1200** **ZSC-1200** **EV-1200** **ESDY-1200**	(1)	**ESD Valve – Starline** 4" CL300 RF, body A350 LF2, Full Port, Trunnion 316L SS stem & ball, Devlon-v seat inserts, Elast-o-lion seats low temp/NACE MR-0175 2002 Edition, Fig# 37-YRF-37mounts with, **Air Torque Pneumatic Actuator**, rack & pinion design, spring return, low temperature rated to -40°c, Based on 40psi sweet supply, fail closed, **Parker 3/8" quick exhaust and speed controller** Fig# PT650-S06LT **Westlock Limit Switch**, (2) mechanical SPDT switches, 3-D beacon indicator, Namur mount CSA Explosion proof, Model# 2007NBY2B2M0200 **ASCO 3-way Solenoid Valve Series 8314** explosion proof version, universal operation, stainless steel body ¼" NPT-F voltage: 24Vdc, Model# EF8314H301 Vent O/S **Amot 3-way Latching Relay**, precision cast aluminum body, connections ¼" NPT Viton seal, Cv1.2, Model# CP4057D025H2 Vent O/S
FE 1106	(1)	**Meter Run** – NuFlo 2" ANSI 300# RF "Senior" Dual Chamber 100% Radiography NACE Trim (1) 1" and (1) 3/4" downstream TOL AGA 2000 Edition with **Flanged Flow Conditioner (FX-1106)**

NOV 04 2013

8784-004

ORIGINAL

NOV 0 4 2013

8784-004

FE/FQI 1104	(1)	**Turbine Meter** – Sur-Flo/Simark 2" x 2" 300# RF Ends, 1" Turbine Meter, 316 SS SF1015-ST-ESP-H-1.0-80 SMRT-101 Simark Controls Explosion Proof Totalizer 8-30 VDC external power, 4-20 mA loop powered Outputs (2): 4-20 mA, two wire Indicator: 4.5 digit display of rate and 8 digit display of total
FE/FQI 1204	(1)	**Turbine Meter** – Sur-Flo/Simark 3" x 3" 300# RF ends w/ 1.5" Turbine Meter, 316 SS SF1015-ST-ESP-H-1.5-80 SMRT-101 Simark Controls Explosion Proof Totalizer 8-30 VDC external power, 4-20 mA loop powered Outputs (2): 4-20 mA, two wire Indicator: 4.5 digit display of rate and 8 digit display of total
LC 1104/1204	(2)	**Level Controller – Fisher L2** 2" NPT process connection 1 7/8" x 12" Lg Vertical PVC Displacer Vent O/S
LCV 1104	(1)	**Control Valve – Samson** Type 3525, 1" NPT ends; ANSI Class 900; Body cast steel A 352 LCC; Screwed ends with female thread NPT acc. to ANSI/ASME B1.20.1; Cv 7; Quick opening characteristic; Max. 1/2" rated travel; Plug with metal sealing; Plug material Stellite 6B; Plug stem Nitronic 50; Seat material Stellite 6B; PTFE-carbon packing, spring-loaded, spring Hastelloy C4; Body O-ring seal HNBR, 70 Shore A; NACE version acc. to ISO 15156-1...3, MR 0103-2007, MR 0175-2002 c/w integrated pneumatic diaphragm actuator 240 cm²; Actuator made of steel, painted; Diaphragm material NBR 50 Sh A; Loading pressure connection ¼" NPT Fail-safe action: Stem extends; Bench range 6 to 30 psi
LCV 1204	(1)	**Control Valve – Samson** Type 3241 Control Valve, size 2" CL300 RF ends, body A 216 WCC, seat and plug 316 SS, Cv47, characteristic =%, shutoff class IV, travel 15mm, standard bonnet, packing PTFE-standard mounts with, **Samson Type 3271 Pneumatic Actuator**, size 350, spring range 6-30 psig travel 15mm, spring force extends actuator stem for fail close action, diaphragm NBR

ORIGINAL

LG 1104/1204 (2) **LGV 1104/1204**		**Level Gauge – Penberthy** Model 1TM5 Transparent 7 7/8" visible length **c/w Model** 330J Sight Glass Valves 3/4" MNPT, 3000 PSI @ 100F, NACE
LSHH 1103 /1203	**(2)**	**Level Switch – Kimray** Model CEC-2 Electric Level Switch 2" NPT process connection c/w external test Snap Acting, SPDT, Class 1, Zone 1
P-123	**(1)**	**Pump – Arrow** 430 Chemical Pump ¼" Single Head, Buna pkg 431EX2DB Maximum Discharge Pressure 2400 PSI Vent O/S
P-124	**(1)**	**Pump - Arrow** 430 Chemical Pump ¼" Single Head, Teflon pkg 431EX3DT Maximum Discharge Pressure 2400 PSI Vent O/S
PCV/PI-1100 4/7/1200/1/2/4	**(7)**	**Pressure Regulator – Fisher Model 67CFR** 1/4" NPT Tapped-Bonnet 0-60 psi adjustable spring range c/w pressure gauge
PI 1090/91/92 94/95 **PI 1103/1203** **PI 1231/1241**	**(9)**	**Pressure Gauge – Hydropoise Model 802** 0 to 1000 PSIG, Dual scale 4-1/2" dia. face x ½" NPT connection Liquid filled Stainless Steel Socket and Element Heavy Duty Aluminum Case
PIT 1108	**(1)**	**Pressure Transmitter – Endress & Hauser** PMP71-DAC1U21RDAAA Measurement: Pressure, piezoresistive. Application: pressure, level. Membrane: Metal, welded. D Approval: CSA C/US IS + XP Cl.I Div.1 Gr.A-D, zone 1,2 A Output; Operating: 4-20mA HART; Extern + LCD C Housing; Cover Sealing; Cable Entry: T14 Alu IP66/67 NEMA6P; EPDM; NPT1/2 thread, T14 = side cover 1U Sensor Range; Sensor Overload Limit: 100bar/10MPa/1500psi gauge; 400bar/40MPa/6000psi

NOV 04 2013

8784-004

ORIGINAL

2 Calibration; Unit: Sensor range; kPa/MPa
1 Membrane Material: 316L
RD Process Connection: Thread ANSI MNPT1/2 hole, 316L
A Fill Fluid: Silicone oil
A Additional Option 1: Not selected
A Additional Option 2: Not selected
Z1 >>Marking: Tagging (TAG), see additional spec

PSHH-1103 /1203	**(2)**	**Pressure Switch – CCS Dual Snap** Model 6900GZE20, Electric 300-1000 PSI Range ½" NPT Connection MAWP 2000 PSI Set at 3600KPag (522 PSI) Increasing
PSV 1103	**(1)**	**Relief Valve – Taylor Model 8200** 1" NPT inlet x 1" NPT outlet 720 PSIG set pressure "D" orifice, Sour trim
PSV 1203	**(1)**	**Relief Valve – Taylor Model 8200** 2" 300# Inlet x 2" 150# outlet 720 PSIG Set Pressure "G" orifice, Sour Trim
PSV-1230 /1240	**(2)**	**Relief Valve – NUPRO** Model SS-4RA35-EP, 1/4" x 1/4" NPT set @ 4960 Kpag, methanol service
PY-1100	**(1)**	**Latching Valve – AMOT Model CP4057D025H2** 3-way latching valve Precision cast aluminum body ¼" NPT Connections, Viton Seal Vent O/S
RG-1231 /1241	**(2)**	**Rate Gauge – Plainsman Model SG48** Rate / Indicator Gauge 1/2" NPT Connections Rate and Height Indication 48" OAL
SP-1104	**(1)**	**Sampler – Peterson** SA-77M1APX 1" AutoSampler ¼" NPT process connection
SDV 1100/01	**(2)**	**ESD Valve – Starline**

NOV 04 2013
08784-004

ORIGINAL

ZSC-1100/01		3" CL300 RF, body A350 LF2, Full Port, Trunnion mounted, 316L SS, Devlon-V seat inserts, elast-o-lion seals low temp/NACE MR-0175 2002 Edition, Fire Safe, API607 **Air Torque Pneumatic Actuator**, rack & pinion design, spring return, low temperature rated to -40°c, Based on 40psi sweet supply, fail open (SDV-1100), Fail closed (SDV-1101) Fig# PT550-S06LT **Westlock Limit Switch**, (2) mechanical SPDT switches, 3-D beacon indicator, Namur mount CSA Explosion proof, Model# 2007NBY2B2M0200
SDY 1100	(1)	**Solenoid - ASCO** Model# EF8314H301-24, 24 VDC ¼" NPT, SST body, low power 0.55 Watts 130 PSIG Maximum Operating Pressure Vent O/S
TE 1106	(1)	**RTD Assembly** ¾" NPT, Union
TW 1106	(1)	**c/w 316SS Thermowell** 1-1/4" U Length

NOV 04 2013
08784-004

TI 1103/1203	(2)	**Temperature Indicator - Trend** 0 to 250°F, Dual scale 3" dia. face, 6" stem ½" NPT back connection
TW 1103/1203	(2)	**c/w 304SS Thermowell**
UIT 1106	(1)	**Multivariable Transmitter** – Control MicroSystems TBUT4102M2Z101U00A 4102 Transmitter, Modbus, LP 3-300inH20 1500 PSI, Al cover, CSA Class 1 Div 1, LCD

4.0 SKID and BUILDING

(1) **Wide Flange Skid**
14' wide x 28' long
1/4" Checkerplate (Building Area)
12" @ 26# wide flange main runners
(4) Lift Lugs
2" Perimeter Drip Lip
8" Floor Drain

(1) **Self Framing Building**
14' wide, 28' long, 8' high low side eave

ORIGINAL

Gable Style Roof
22 gauge ASTM A653/A792 Gr.37 Prepainted
Dofasco Tan c/w Metro Brown Doors & Trim
24 ga white fluted aluminum c/w (fiberglass) R12 walls and R20 roof c/w 6 mil vapor barrier.
2 – 3' x 7' steel single door 20 ga. HC c/w IWG, panic, check chain, weather-strip and canopys.
2 – 38" x 36" double glazed sliding window c/w screen.
2 - 12" x 18" manually adjustable louvers c/w screen.
1 – 6"wide x full length ridge vent c/w manual damper, chain operated and bird screen
1 – ET12-1, XP, 120/1/60 exhaust fan c/w hood (Sized for 6 ACPH)**(EF-126)**
Full length ice rakes
Eave troughs and downspouts
Note: 36" vessel will protrude through building roof.

NOV 04 2013

8784-004

6.0 MANUAL VALVES

(10) **Ball Valve, Vintrol Floating** – 2" ANSI 300# RF, RP, CS Body, NACE

(13) **Ball Valve, Vintrol Floating** - 3" ANSI 300# RF, RP, CS Body, NACE

(16) **Ball Valve, Vintrol Floating** - 3" ANSI 300# RF, FP, CS Body, NACE

(2) **Ball Valve, Vintrol Floating** - 4" ANSI 300# RF, RP, CS Body, NACE

(1) **Ball Valve, Vintrol Floating** – 4" ANSI 300# RF, FP, CS Body, NACE

(30) **Ball Valve, Balon** -1/2" NPT, 3000# RP, CS Body, NACE

(4) **Ball Valve, Balon** -¾" NPT, 3000#, FP, CS Body, NACE

(23) **Ball Valve, Balon** - 1" NPT, 2500# RP, CS Body, NACE

(3) **Ball Valve, Balon** - 2" NPT, 2000#, RP, CS Body, NACE

(3) **Check Valve, Vintrol** - 2" 300# ANSI RF, RP, CS body, NACE trim

(10) **Check Valve, Vintrol** - 3" 300# ANSI RF, FP, 316SS trim

(4) **Check Valve Inline Plainsman** - ½" NPT, 3000 psi, 316 SS

(1) **Swing Check Valve, Wheatley** - 1" NPT, 2160#, RP, CS body, NACE trim

(2) **Swing Check Valve, Wheatley** - 2" NPT, CL800, RP, CS body, NACE trim

(8) **Needle Valve Anderson Greenwood** - ½" NPT, 6000#, F x F, SS Body

ORIGINAL

(4) **Needle Valve Anderson Greenwood** - ½" NPT, 6000#, M x F, SS Body

(2) **Needle Valve Anderson Greenwood** - ½" NPT, 6000#, Block and Bleed, M x F, SS Body, Model M25VIS-44-SG or equivalent

(1) **Needle Valve Anderson Greenwood** - ½" NPT, 6000#, Block and Bleed, F x F, SS Body, Model M25VIS-4-SG or equivalent

(2) **Globe Valve Newco** - 1" NPT, CL800, NACE trim

(1) **Globe Valve Newco** - 2" NPT, CL800, NACE trim

(1) **Basket Filter** – Strainer Model 2" BFS300N, 2" 300# RF, NACE, 1/8" perforated

(1) **Basket Filter** – Strainer Model 3" BFS300N, 3" 300# RF, NACE, 1/8" perforated

(2) **Manifold 5 Valve** – Wafer Style, ½" FNPT to Flange, Vent/Test ¼", 316 SS

NOV 04 2013

8784-004

7.0 PACKAGE MATERIALS

Structural Material: A 36/44W

Pressure Vessels

Heads:	SA-516-70N
Shell:	SA-516-70N
Skirt:	SA-53 Sch. 10 (0.25 wall) Pipe
Pipe:	SA-106-Gr B SMLS
Flanges:	SA-105N
Weld Fittings:	SA-234-WPB

Threaded Piping

Pipe Liquid Line:	SA-106-Gr B, Sch. 80 SMLS
Pipe Fuel gas:	SA-106-Gr B, Sch. 80 SMLS
Threaded Fittings:	SA-105N, 3000#

Welded Piping

Pipe:	SA-106-Gr B, Sch. 40 SMLS
Flanges:	SA-105N
Weld Fittings:	SA-234-WPB
Threadolets and Couplings:	SA-105N
Gaskets:	316 S.S. Spiral wound Flexicarb
Bolting:	SA-193-B7M, SA-194-2HM

Tubing:	316 SS, Instrument: 0.035" WT, Process: 0.049" WT
Fittings:	Stainless Steel - Swagelok

8.0 TESTING / POST WELD HEAT TREAT (PWHT)

Hydro-Testing: Pressure Vessels: As per ASME Section VIII Div 1
Pressure Piping : As per ASME B31.3 N.F.S.

RIGINAL

Radiography:	Vessels:	
	V-110	RT-1 (Full)
	V-120	RT-1 (Full)
	V-121	Exempt as per UW11(c)
	Weld Piping:	100% Radiography
PWHT:	Vessel V-110	Yes
	Vessel V-120	Yes
	Vessel V-121	No
	Piping:	No
Ultrasonic Test:	None Included	
Hardness Test:	None Included	
Dye Penetrant:	None Included	
MPI:	Skid Lift lugs	

NOV 04 2013

84 - 004

87

9.0 PAINTING / COATING

Surface Preparation: SSPC SP-6 Commercial blast
Package Finish: Two (2) shop coats Cloverdale Series 835 DTM Polyurethane Enamel - Warm Grey

10.0 DOCUMENTATION

- Two equipment manuals on CD are supplied. One hard copy manual shipped with unit. Documents are in accordance to NWP's Standard Document Index. Additional hard copies are available at $500 per copy
- P&ID, skid, vessel and general arrangement drawings (with one revision) are included. Extra charges apply for additional changes and revisions at $95.00 per hour.
- Alberta P. Eng stamped P & ID with Line List, Skid & Building shall be included.
- A Project Management Fee of $85.00/Hr shall be charged for any Customer changes to project design, drawings, scope of work, or specifications above and beyond those required for fabrication of the product as submitted and proposed in this quotation.
- ABSA Piping registration if total volume exceeds 0.5 m3
- Stainless Steel Instrument tags provided

11.0 ADDITIONAL NOTES

- NWP Standard Terms and Conditions of Sale shall apply.
- NWP reviews all specifications provided to us. NWP, however, cannot accept responsibility for any omissions made in our quotations which are not in compliance. We require that customers review the quotation for compliance to their specifications and request a revision for any errors / omissions which may have been made.
- Engineering review is not done at time of quotation. If material and / or specifications change due to engineering review, price adjustment will apply.
- All weld piping and Pig Receiver shall be built as per ASME B31.3 specifications.

ORIGINAL

- No electrical wiring of components, heaters, or building lighting has been allowed for.

NOV 14 2013

13.0 TERMS

The following Progress Payment Schedule shall apply to this order:

- 15% invoiced upon submittal of approval drawings.
- 40% invoiced upon receipt of major materials.
- 45% invoiced upon completion and readiness to ship.

8784-004

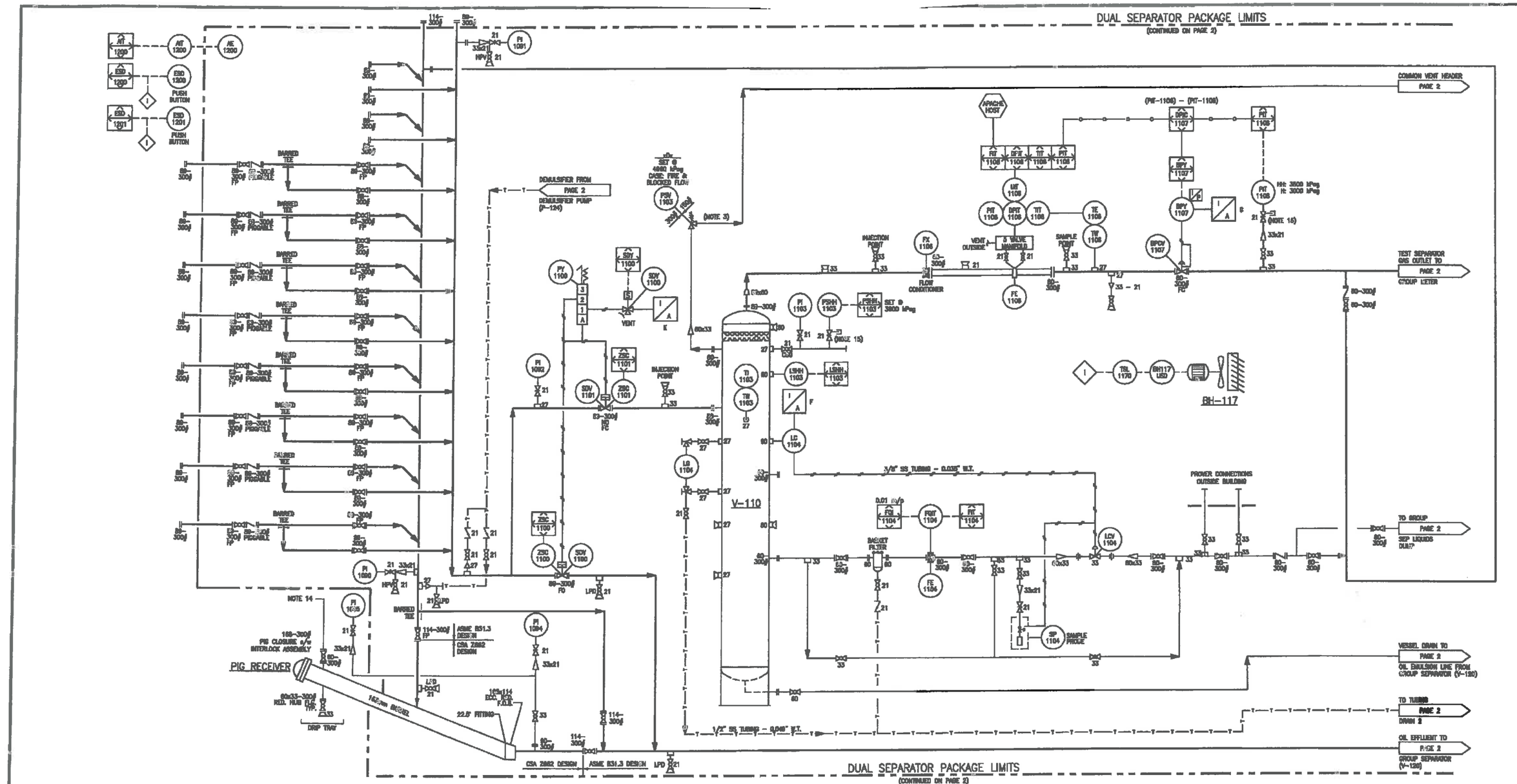

REV	DATE	BY	CHK	APP	DESCRIPTION
1	SEP 10/13	CT			ISSUED FOR CONSTRUCTION
0	JUNE 25/13	CT	.	.	ISSUED FOR CONSTRUCTION
B	JUNE 17/13	CT	.	.	ISSUED FOR APPROVAL
A	MAY 1/13	EP	.	.	ISSUED FOR APPROVAL

DRAWING REVISIONS

ISSUED FOR CONSTRUCTION

SIGNED:

DATE: NOV 04 2013

W.O.: 8784-004

S/N:

ALL DIMENSIONS IN INCHES

NWP INDUSTRIES INC.
Total oilfield supply.
P.O. BOX 6260, INNISFAIL, AB T4G 1S9
PH: (403) 227-4100 FAX: (403) 227-4102

SCALE: N.T.S.
WEIGHT: (W/FLUID, LESS)

APACHE CANADA LTD c/o GENIVAR
DUAL SEPARATOR
LSD: TBD
24"O.D. x 90"S/S TEST SEP. / 36"O.D. x 12" S/S GROUP SEP.

PIPING AND INSTRUMENTATION DIAGRAM

DWN:	CHK:	APP:
CT		
DATE: AUG 15/13	DATE: SEP 10 2013	DATE: 09/10/13

SHEET: 1 OF 3 | DWG: 08784-002 | REV: 1

COPYRIGHT © NWP 2012 THIS DRAWING IS PROPERTY OF NWP INDUSTRIES INC. AND MAY NOT BE REPRODUCED WITHOUT PERMISSION. THIS DRAWING MUST

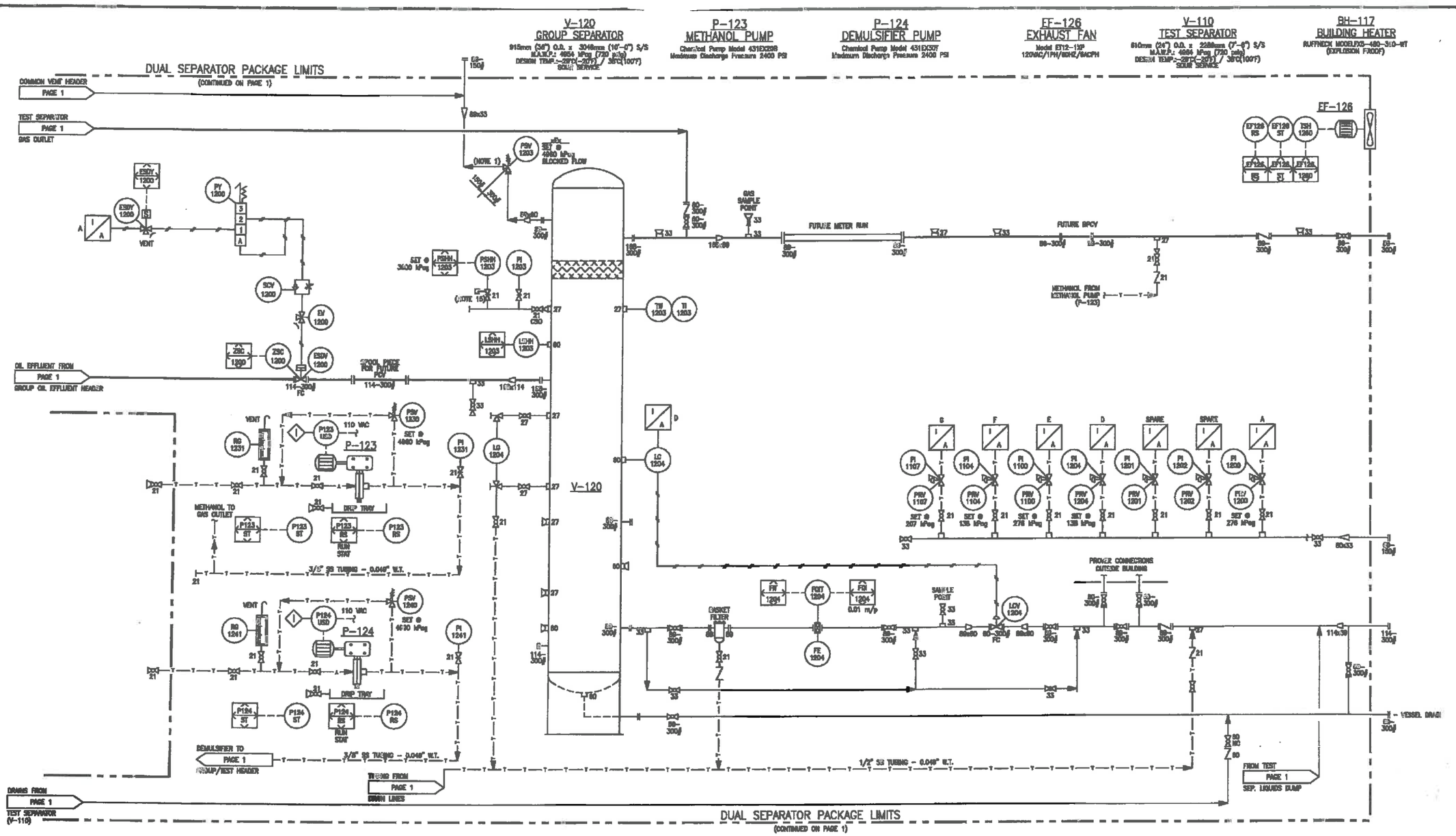

REV	DATE	BY	CHK	APP	DESCRIPTION
1	SEP 10/13	CT			ISSUED FOR CONSTRUCTION
0	JUNE 25/13	CT	.	.	ISSUED FOR CONSTRUCTION
B	JUNE 17/13	CT	.	.	ISSUED FOR APPROVAL
A	MAY 1/13	EP	.	.	ISSUED FOR APPROVAL

DRAWING REVISIONS

ISSUED FOR CONSTRUCTION
SIGNED:
DATE: NOV 04 2013
W.O.: 8784-004
S/N:
ALL DIMENSIONS IN INCHES

NWP INDUSTRIES INC.
Total oilfield supply.
P.O. BOX 6280, INNISFAIL, AB T4G 1S9
PH: (403) 227-4100 FAX: (403) 227-4102

SCALE: N.T.S.
WEIGHT: (APPROX. Lbs)

APACHE CANADA LTD c/o GENIVAR
DUAL SEPARATOR
LSD: TBD
24"O.D. x 90"S/S TEST SEP. / 36"O.D. x 12" S/S GROUP SEP.

PIPING AND INSTRUMENTATION DIAGRAM

DWN:	CHK:	APP:
CT		
DATE: AUG 15/13	DATE: SEP 11 2013	DATE: 09/11/13

SHEET:	DWG:	REV:
2 OF 3	08784-002	1

COPYRIGHT © NWP 2012 THIS DRAWING IS PROPERTY OF NWP INDUSTRIES INC. AND MAY NOT BE REPRODUCED WITHOUT PERMISSION. THIS DRAWING MUS

LINETYPE LEGEND

- MAJOR PROCESS LINE
- UTILITY LINE
- BUILDING LIMITS
- ENCLOSURE LIMITS
- ALTERNATE LIMITS
- CUST/VENDOR SUPPL. LIMITS
- HIDDEN LINE
- EQUIPMENT OUTLINE
- INSTRUMENT PNEUMATIC LINE
- PROCESS/UTILITY TUBING LINE
- INSTRUMENT CAPILLARY LINE
- ELECTRICAL DATALINK LINE
- ELECTRICAL CONNECTION LINE
- HYDRAULIC LINE
- MECHANICAL LINK LINE

INSULATION LEGEND

- 2.5" PP — " THICKNESS
- 3" C — C=COLD, H=HOT, PP=PERSONEL PROTECTION
- 2.5H ET — " THICKNESS c/w TRACING
- 3"H GT — ET=ELEC. TRACE, GT=GLYCOL TRACE, OT=OIL TRACE, ST=STEAM TRACE

VALVE SYMBOL LEGEND

- BALL VALVE
- SPRING RETURN BALL VALVE
- GLOBE VALVE
- GATE VALVE
- CHECK VALVE
- PLUG VALVE
- NEEDLE VALVE
- INLINE CHOKE VALVE
- 4-WAY VALVE
- 3-WAY VALVE
- BUTTERFLY VALVE
- BASKET/CONE STRAINER
- TEE STRAINER
- Y STRAINER
- RUPTURE VALVE
- PRESSURE RELIEF VALVE
- ANGLE VALVE
- ANGLE CHOKE VALVE
- GAUGE VALVE

VALVE CONNECTION LEGEND

- THRD VALVE
- THRD/SW VALVE
- SW VALVE
- FLANGED VALVE

TOPWORKS SYMBOL LEGEND

- DIAPHRAGM ACTUATOR
- ACTUATOR WITH HANDWHEEL
- ACTUATOR WITH POSITIONER
- PRESS. REDUCING REGULATOR
- BACK PRESS. REGULATOR
- REGULATOR WITH HANDWHEEL
- PISTON ACTUATOR
- ACTUATOR WITH POSITIONER
- ROTARY PISTON ACTUATOR
- ROTARY MOTOR ACTUATOR
- SOLENOID
- SPRING WEIGHTED ACTUATOR
- MANUAL/HAND ACTUATOR

METERING

- METER RUN
- ORIFICE METER
- FLOW CONDITIONER
- VORTEX METER
- POSITIVE DISPLACEMENT METER
- TURBINE/PROPELLER METER
- MASS FLOW METER
- ROTOMETER
- VENTURI
- XXXX — 5-VALVE MANIFOLD

MISC TAG SYMBOL LEGEND

- IG/1 — INSTR. GAS TO AND FROM
- IA/1 — INSTR. AIR TO AND FROM
- RTU — RTU
- I/P — I/P ELECTRO PNEUMATIC
- — —

MISC SYMBOLS LEGEND

- FLANGE / BLIND FLANGE
- BW CAP / THRD CAP
- UNION
- TOL/CPLG w/PLUG
- BREAK
- CONCENTRIC REDUCER
- CONCENTRIC SWAGE
- FOT FOT — ECC REDUCERS
- FOB FOB — ECC REDUCERS
- SKID EDGE SCARFED VENT
- FLEXIBLE HOSE
- EXPANSION JOINT
- HOSE/CAMLOCK CONNECTION
- SPEC. BLIND-CLOSED/OPEN
- FIELD WELD
- WEIR
- T — TRAP
- PIPE/TUBING FLOW ARROW
- SPEC/RESPONSIBILITY BREAK
- SPEC/RESPONSIBILITY BREAK
- FLANGED NOZZLE
- MANWAY

- CONNECTION INDICATOR
- LIGHT
- SPEED CONTROL
- VH — PRESSURE ACTUATED CONTROL VALVE (AMOT)
- CONSTRUCTION REVISIONS
- EARTH
- ATO MUFFLER

NOTES

1. SHOP INSTALL ADDITIONAL PIPE SUPPORTS WHERE REQ'D.
2. SHIP LOOSE ITEMS TO BE BOXED AND SEALED PRIOR TO SHIPMENT.
3. PLUG AND PROTECT ALL OUTLETS PRIOR TO SHIPMENT.
4. ROUTE PIPING TO ENSURE NO LIQUID TRAPS.
5. ALL PIPING MATERIAL TO BE STANDARD TEMP U.N.O.
6. HYDROTEST WELDED PIPING TO 1.5 x M.A.W.P.
7. WELDED PIPING BUTT WELDS TO BE 100% X-RAYED. U.N.O.
8. ALL PIPING AND PROCESS TUBING LINES TO BE TESTED PER B31.3
9. INSTRUMENT SUPPLY LINES TO BE TESTED PER ABSA AB-522.
10. VESSELS TO BE FABRICATED TO THE LATEST EDITION OF THE ASME SECTION VIII DIVISION 1.
11. SURFACE PREP: SSPC-SP6
12. PAINT: 2 SHOP COATS CLOVERDALE SERIES 835 DTM POLYURETHANE ENAMEL-WARM GREY.
13. ELECTRICAL BY OTHERS.
14. ADD 4'-0" VENT STACK c/w BIRDSCREEN.
15. NEEDLE VALVES TO HAVE CALIBRATION PORTS.
16. PSV SIZE TO BE CONFIRMED BY VENDOR.
17. PIPING TO COME WITH HP VENTS AND LP DRAINS.

INSTRUMENTATION SYMBOLS AND IDENTIFICATION

LETTER	FIRST LETTER	PRIMARY ELEMENT	INDICATOR	RECORDER	CONTROLLER: BLIND	CONTROLLER: INDICATING	CONTROLLER: RECORDING	TRANS-MITTER	CONTROL: SWITCH	CONTROL: ALARM	CONTROL: *DEFINER	CONTROL VALVE	REGULATOR	SELF ACTUATED VALVE	RELAY OR CONVERTOR
A	ANALYSIS	AE	AI	AR	AC	AIC	ARC	AT	AS(*)	AA(*)		AV			AY
B	BURNER COMBUSTION	BE	BI	BR	BC			BT	BS(*)	BA(*)		BV			BY
BP	BACK PRESSURE											BPV		BPCV	
C	CONDUCTIVITY	CE	CI	CR	CC	CIC	CRC	CT	CS(*)	CA(*)		CV			CY
D	DENSITY OR MASS	DE	DI	DR	DC	DIC	DRC	DT	DS(*)	DS(*)		DV			DY
E	VOLTAGE	EE	EI	ER	EC	EIC	ERC	ET	ES(*)	EA(*)		EV			EY
F	FLOW, FLOW RATE	FE	FI	FR	FC	FIC	FRC	FT	FS(*)	FA(*)		FV		FCV	FY
G	GAUGING	GE	GI	GR	GC	GIC	GRC	GT	GS(*)	GA(*)		GV			
H	HAND				HC	HIC	HRC	HT	HS(*)			HV		HCV	HY
I	CURRENT	IE	II	IR	IC	IIC	IRC	IT	IS(*)	IA(*)					IY
J	POWER	JE	JI	JR	JC	JIC	JRC	JT	JS(*)	JA(*)					JY
K	TIME, SCHEDULE		KI	KR	KC	KIC	KRC	KT	KS(*)	KA(*)					KY
L	LEVEL	LE	LI	LR	LC	LIC	LRC	LT	LS(*)	LA(*)		LV		LCV	LY
M	MOISTURE, HUMIDITY	ME	MI	MR	MC	MIC	MRC	MT	MS(*)	MA(*)		MV			MY
N	USER'S CHOICE														
O	USER'S CHOICE														
P	PRESSURE	PE	PI	PR	PC	PIC	PRC	PT	PS(*)	PA(*)		PV	PRV	PCV	PY
Q	QUANTITY		QI	QR	QC	QIC	QRC	QT	QS(*)	QA(*)		QV			QY
R	RADIATION	RE	RI	RR	RC	RIC	RRC	RT	RS(*)	RA(*)					RY
S	SPEED, FREQUENCY		SI	SR	SC	SIC	SRC	ST	SS(*)	SA(*)		SV		SCV	SY
T	TEMPERATURE	TE	TI	TR	TC	TIC	TRC	TT	TS(*)	TA(*)		TV		TCV	TY
U	MULTI-VARIABLE		UI	UR	UC	UIC	URC					UV			UY
V	VIBRATION, MECH. ANAL.	VE	VI	VR	VC	VIC	VRC	VT	VS(*)	VA(*)		VV			VY
W	WEIGHT, FORCE	WE	WI	WR	WC	WIC	WRC	WT	WS(*)	WA(*)		WV			WY
X	UNCLASSIFIED	XE	XI	XR	XC	XIC	XRC	XT	XS(*)	XA(*)		XV			XY
Y	EVENT, STATE, PRESENCE														YY
Z	POSITION, DIMENSION	ZE	ZI	ZR	ZC	ZIC	ZRC	ZT	ZS(*)	ZA(*)					ZY

ABBREVIATIONS

A/G	ABOVE GROUND	GO	GEAR OPERATED	PC	PURGE CONNECTION
APP	APPROVED	GS	GAS SUPPLY	PD	POSITIVE DISPLACEMENT
AS	AIR SUPPLY	GT	GLYCOL TRACE	PFS	PROCESS FLOW SHEET
ASSY	ASSEMBLY	HC	HOSE CONNECTION	P/I	PNEUMATIC TO CURRENT
ATM	ATMOSPHERE	HLL	HIGH LIQUID LEVEL	P/L	PIPELINE
BBE	BEVEL BOTH ENDS	HP	HIGH POINT	PLC	PROGRAMMABLE LOGIC CONTR.
BBL	BARREL	HPV	HIGH POINT VENT	PP	PLOT PLAN
BCD	BOLT CIRCLE DIAMETER	HS	HYDRAULIC SUPPLY	PO	PUMP OUT
BD	BLOWDOWN	HT	HEAT TRACE	RF	RAISED FACE
BLD	BLIND	IA	INSTRUMENT AIR	RO	RESTRICTION ORIFICE
BTU	BRITISH TERMAL UNITS	IC	INTERNAL COMBUSTION	RP	REDUCED PORT
CC	CORROSION COUPON	ID	INSIDE DIAMETER	RTU	REMOTE TRANSMITTING UNIT
CP	CORROSION PROBE	IG	INSTRUMENT GAS	SC	SAMPLE CONNECTION
CS	CARBON STEEL	INJ. PT.	INJECTION POINT	s/c	SHOP COAT
CSC	CAR SEAL CLOSED	I/P	CURRENT TO PNEUMATIC	S/D	SHUTDOWN
CSO	CAR SEAL OPEN	I/S	INSIDE	SG	SPECIFIC GRAVITY
c/w	COMPLETE WITH	LLL	LOW LIQUID LEVEL	SMLS	SEAMLESS
DBB	DOUBLE BLOCK & BLEED	LP	LOW POINT	SO	STEAM OUT
DP	DESIGN PRESSURE	LPD	LOW POINT DRAIN	SP	SET POINT
DT	DESIGN TEMPERATURE	LSD	LEGAL SUBDIVISION	SS	STEAM SUPPLY
ES	ELECTRIC SUPPLY	MAWP	MAX. ALLOW. WORK PRES.	SS	STAINLESS STEEL
ESD	EMERGENCY SHUTDOWN	MDMT	MIN. DESIGN METAL TEMP.	S/S	SEAM TO SEAM
ET	ELECTRICAL TRACE	MCC	MOTOR CONTROL CENTER	ST	SOUR TRIM
FC	FAIL CLOSE	MHP	MECH. HORSE POWER	TK	TANK
FFSD	FLAME FAILURE SHUTDOWN	MFS	MECHANICAL FLOW SHEET	TSO	TIGHT SHUT-OFF
FI	FAIL INTERMEDIATE	NC	NORMALLY CLOSED	T/T	TANGENT TO TANGENT
FL	FAIL LOCKED	NLL	NORMAL LIQUID LEVEL	TW	THERMO WELL
FLG	FLANGE	NO	NORMALLY OPEN	UA	UNIT ALAM
FO	FAIL OPEN	NS	NITROGEN SUPPLY	U/G	UNDER GROUND
FRD	FLOAT RELEASE DEVICE	NSPC	NON-SLAM PISTON CHECK	UNO	UNLESS NOTED OTHERWISE
FP	FULL PORT	NTS	NOT TO SCALE	VH	VENT HEADER
FS	FORGED STEEL	OD	OUTSIDE DIAMETER	WS	WATER SUPPLY
FW	FIELD WELD	O/S	OUTSIDE		

VALVE TAGGING

XX XXX XX

- BALL VALVE (FULL PORT) – BF
- BALL VALVE (REG. PORT) – BR
- BUTTERFLY VALVE – BU
- CHECK VALVE (BALL) – CB
- CHECK VALVE (PISTON) – CP
- CHECK VALVE (SWING) – CS
- CHECK VALVE (WAFER) – CW
- GATE VALVE – GA
- GLOBE VALVE – GL
- STRAINER (BASKET) – SB
- STRAINER (T) – ST
- STRAINER (Y) – SY
- SWAGELOK – SW
- NEEDLE VALVE (FEMALE x FEMALE) – NF
- NEEDLE VALVE (MALE x FEMALE) – NM
- MANIFOLD – MF

- 025 – 1/4"
- 038 – 3/8"
- 050 – 1/2"
- 075 – 3/4"
- 100 – 1"
- 200 – 2"
- 201 – 2" 150 ANSI
- 303 – 3" 300 ANSI
- 406 – 4" 600 ANSI
- 609 – 6" 900 ANSI
- 815 – 8" 1500 ANSI
- 1025 – 10" 2500 ANSI

- G – GAS SERVICE
- H – HIGH PRESSURE
- L – LOW TEMP.
- N – NACE
- P – 0-799#
- Q – 800#
- R – 900#
- S – 901# – 1500#
- T – 2000#
- U – 2001# – 2499#
- V – 2500#
- W – 3000#
- X – 6000#
- Y – 6001# – 10000#
- Z – UNCLASSIFIED
- 1 – BOW CLAMPER

LINE TAGGING

XX–X"–X–XXXX–XXX

- DRAIN – D
- EMULSION – E
- FUEL GAS – FG
- GLYCOL – G
- HYDROCARBONS – HC
- INSTRUMENT AIR – IA
- PROCESS FLUID – PF
- PROCESS GAS – PG
- PRESSURE RELIEF – PR
- VENT (ATMOS) – V
- WATER – W

NOMINAL PIPE SIZE

PIPE SCHEDULE

- 150 ANSI FLANGED – A
- 300 ANSI FLANGED – B
- 600 ANSI FLANGED – C
- 900 ANSI FLANGED – D
- 1500 ANSI FLANGED – E
- 2500 ANSI FLANGED – F
- CLASS 2000 TH'RD/SW – T
- CLASS 3000 THRD/SW – W
- CLASS 6000 THRD/SW – X

- 0100–0199 PROCESS FLUID
- 0200–0299 PROCESS GAS
- 0300–0399 EMULSION
- 0400–0499 HYDROCARBONS
- 0500–0599 GLYCOL
- 0600–0699 WATER
- 0700–0799 DRAIN
- 0800–0899 FUEL GAS
- 0900–0999 PRESSURE RELIEF
- 1000–1099 INSTR. AIR
- 1100–1199 VENT (NO TESTING)

- A – GALVANIZED TUBING w/ CS FITTINGS
- B – 304W SS TUBING w/ CS FITTINGS
- C – 304W SS TUBING w/ 316 SS FITTINGS
- D – 316 SS TUBING w/ 316 SS FITTINGS
- E – 316 SS TUBING w/ CS FITTINGS
- F – NOT APPLICABLE

TAG LEGEND

	LOCALLY MOUNTED	PRIMARY LOC. OR PANEL NORMALLY ACCESS. TO OPER.	AUXILIARY LOC. OR PANEL NORMALLY ACCESS TO OPER.	PRIMARY LOC. OR PANEL MOUNTED ON BACK OF PANEL	AUXILIARY LOC. OR PANEL MOUNTED ON BACK OF PANEL
DISCRETE	○	○	○	○	○
SHARED DISPLAY, SHARED CONTROL DISTRIBUTION, CONTROL VIDEO DISPLAY	▭	▭	▭	▭	▭
COMPUTER FUNCTION, SOFTWARE FUCTION	⬡	⬡	⬡	⬡	⬡
PROGRAMMABLE LOGIC CONTROL	◇	◇	◇	◇	◇

DRAWING REVISIONS

REV	DATE	BY	CHK	APP	DESCRIPTION
1	SEP 10/13	CT			ISSUED FOR CONSTRUCTION
0	JUNE 25/13	CT	.	.	ISSUED FOR CONSTRUCTION
B	JUNE 17/13	CT	.	.	ISSUED FOR APPROVAL
A	MAY 1/13	EP	.	.	ISSUED FOR APPROVAL

ISSUED FOR CONSTRUCTION

SIGNED:

DATE: NOV 04 2013

W.O.: 8784-004

S/N:

ALL DIMENSIONS IN INCHES

NWP INDUSTRIES INC.
Total oilfield supply.
P.O. BOX 8280, INNISFAIL, AB T4G 1S9
PH: (403) 227-4100 FAX: (403) 227-4102

APACHE CANADA LTD c/o GENIVAR
DUAL SEPARATOR
LSD: TBD
24"O.D. x 90"S/S TEST SEP. / 36"O.D. x 12" S/S GROUP SEP.

PIPING AND INSTRUMENTATION DIAGRAM LEGEND

DWN:	CT	CHK:		APP:	
DATE:	AUG 15/13	DATE:	SEP 10 2013	DATE:	SEP 10/13

SCALE: N.T.S.
WEIGHT: (APPROX. LBS)

SHEET: 3 OF 3 | DWG: 08784-002 | REV: 1

COPYRIGHT © NWP 2012 THIS DRAWING IS PROPERTY OF NWP INDUSTRIES INC. AND MAY NOT BE REPRODUCED WITHOUT PERMISSION. THIS DRAWING MUST

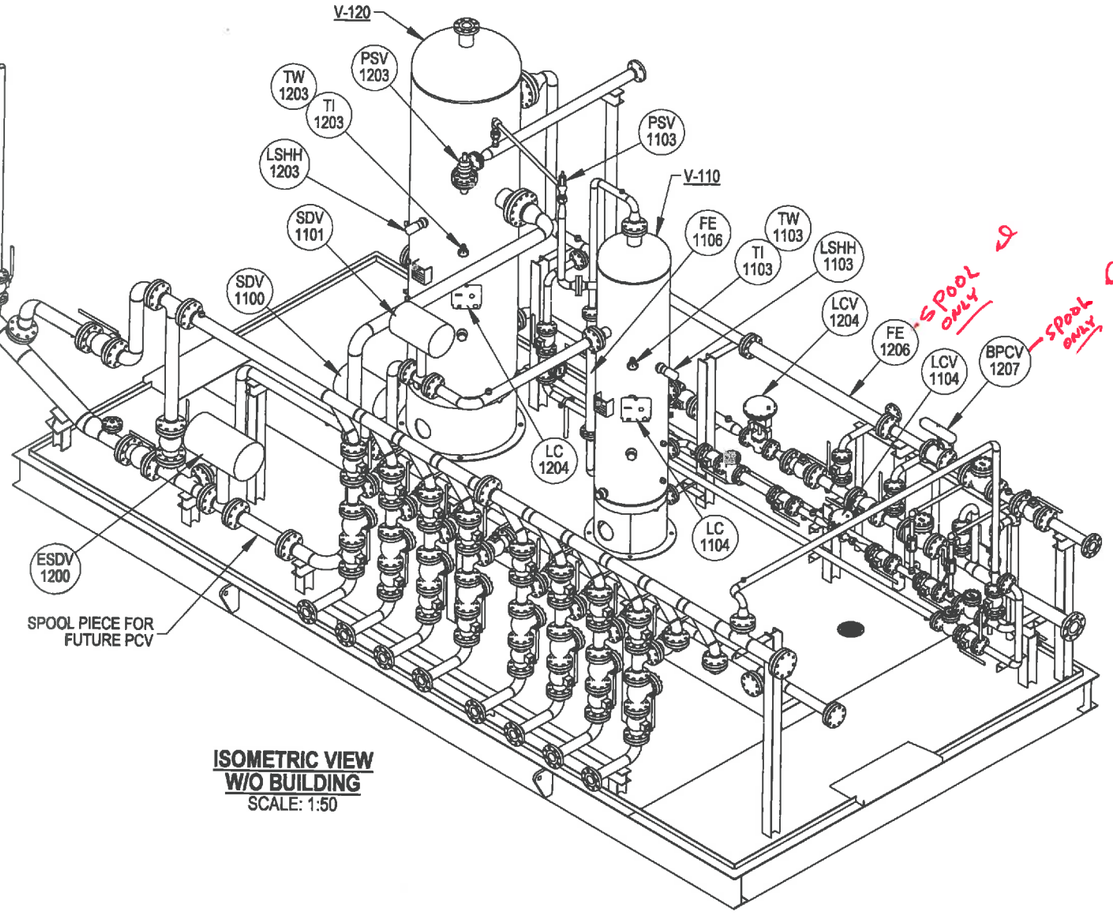

ISOMETRIC VIEW
W/O BUILDING
SCALE: 1:50

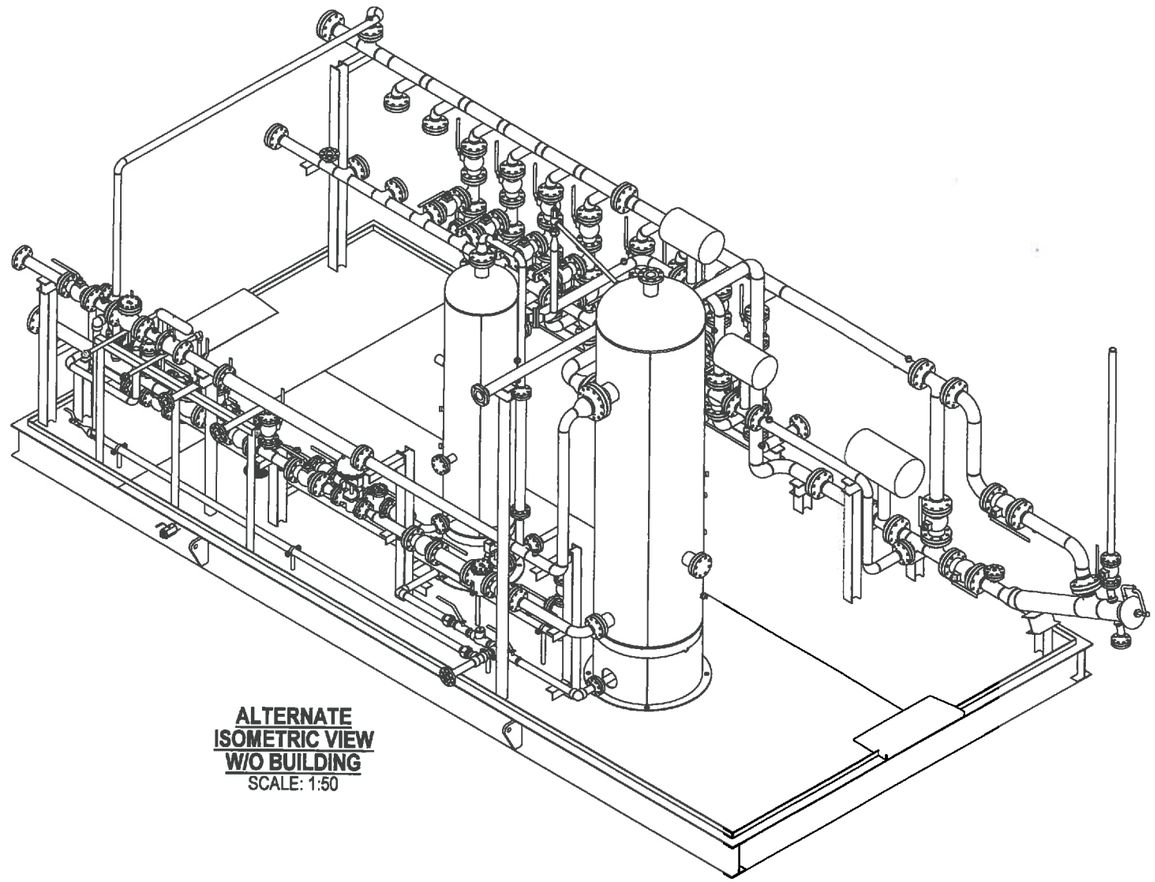

ALTERNATE
ISOMETRIC VIEW
W/O BUILDING
SCALE: 1:50

ORIGINAL

SHIPPING DATA	
APPROX. OVERALL HEIGHT:	15' - 3 11/16"
APPROX. OVERALL LENGTH:	32' - 1 1/8"
APPROX. OVERALL WIDTH:	15' - 0"
APPROX. WEIGHT:	32,000 LBS

REV.	DATE	BY:	CHK:	APP:	DESCRIPTION
1	OCT 29/13	PA	Q	JvE	MODIFIED DWG 08784-003-W-007 SPOOL 7
0	SEP 09/13	PA	DF	GH	ISSUED FOR CONSTRUCTION

DRAWING REVISIONS

ISSUED FOR CONSTRUCTION
SIGNED:
DATE: NOV 04 2013
W.O.: 8784-004
S/N: NWP-08784-004

ALL DIMENSIONS IN INCHES

NWP INDUSTRIES INC.
Total oilfield supply.
P.O. BOX 6280, INNISFAIL, AB T4G 1S9
PH: (403) 227-4100 FAX: (403) 227-4102

APACHE CANADA LTD C/O GENIVAR
DUAL SEPARATOR
LSD: 4-25-35-5 W4M
24" OD x 90" S/S TEST SEP. / 36" OD x 120" S/S GROUP SEP.

GENERAL ARRANGEMENT

DWN:	CHK:	APP:
PA	Q	JvE
DATE: JUN 14/13	DATE: OCT 30 2013	DATE: 10/30/13

PROJECTION: | SCALE: AS NOTED | WEIGHT: (APPROX. LBS)

SHEET: 1 OF 3 | DWG: 08784-003-G-001 | REV: 1

COPYRIGHT © 2012 NWP THIS DRAWING IS PROPERTY OF NWP INDUSTRIES INC. AND MAY NOT BE REPRODUCED WITHOUT PERMISSION. THIS DRAWING MUST BE RETURNED UPON REQUEST.

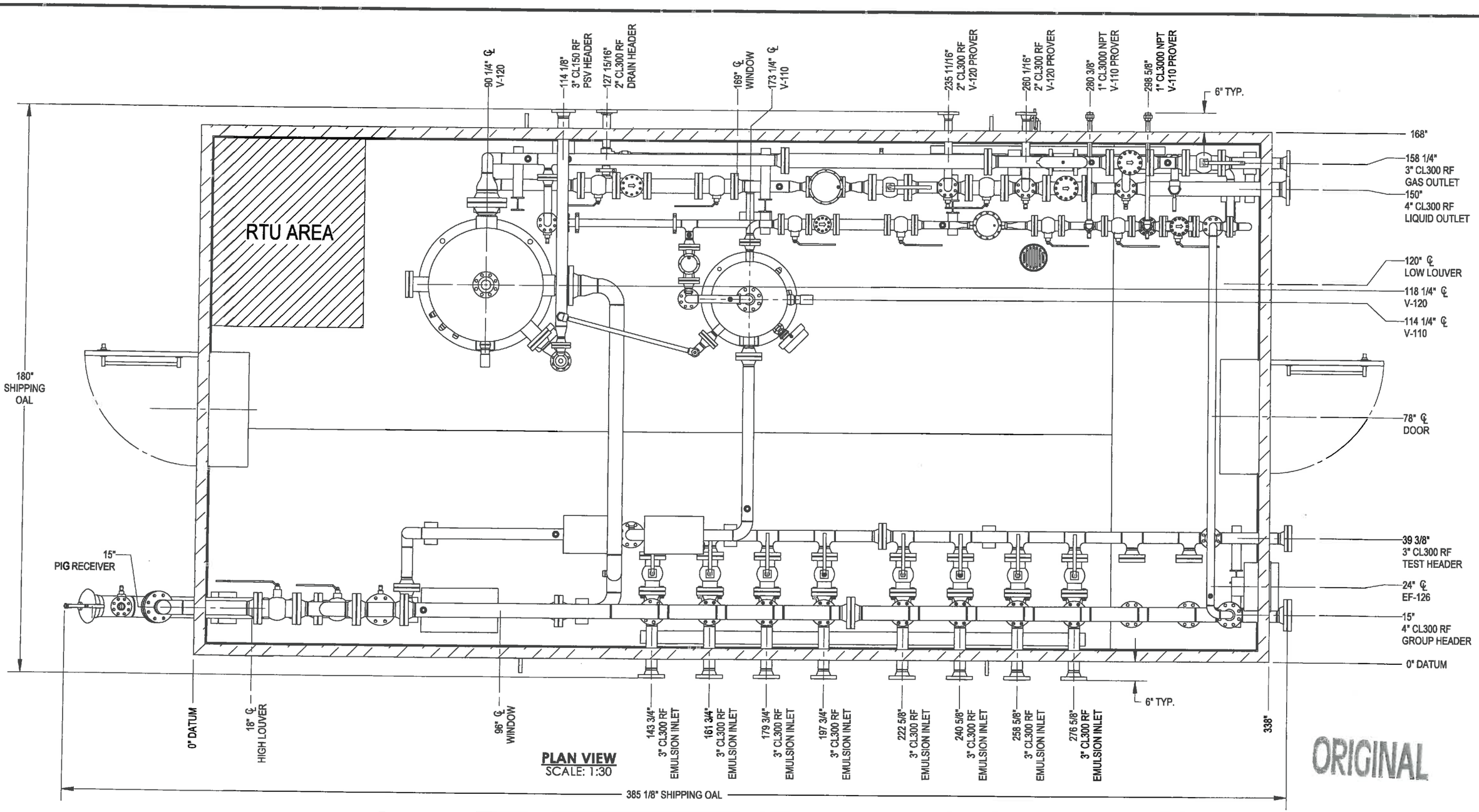

ORIGINAL

REV.	DATE	BY:	CHK:	APP:	DESCRIPTION
1	OCT 29/13	PA			MODIFIED DWG 08784-003-W-007 SPOOL 7
0	SEP 09/13	PA	DF	GH	ISSUED FOR CONSTRUCTION

DRAWING REVISIONS

ISSUED FOR CONSTRUCTION

SIGNED:

NOV 04 2013

W.O.: 8784-004

S/N: NWP-08784-004

ALL DIMENSIONS IN INCHES

NWP INDUSTRIES INC.
Total oilfield supply.
P.O. BOX 6280, INNISFAIL, AB T4G 1S9
PH: (403) 227-4100 FAX: (403) 227-4102

PROJECTION:

SCALE: AS NOTED

WEIGHT: (APPROX. LBS)

APACHE CANADA LTD C/O GENIVAR
DUAL SEPARATOR
LSD: 4-25-35-5 W4M
24" OD x 90" S/S TEST SEP. / 36" OD x 120" S/S GROUP SEP.

GENERAL ARRANGEMENT

DWN: PA	CHK:	APP:	SHEET: 2 OF 3	DWG: 08784-003-G-001	REV: 1
DATE: JUN 14/13	DATE: OCT 30 2013	DATE: 10/30/13			

COPYRIGHT © 2012 NWP THIS DRAWING IS PROPERTY OF NWP INDUSTRIES INC. AND MAY NOT BE REPRODUCED WITHOUT PERMISSION. THIS DRAWING MUST BE RETURNED UPON REQUEST.

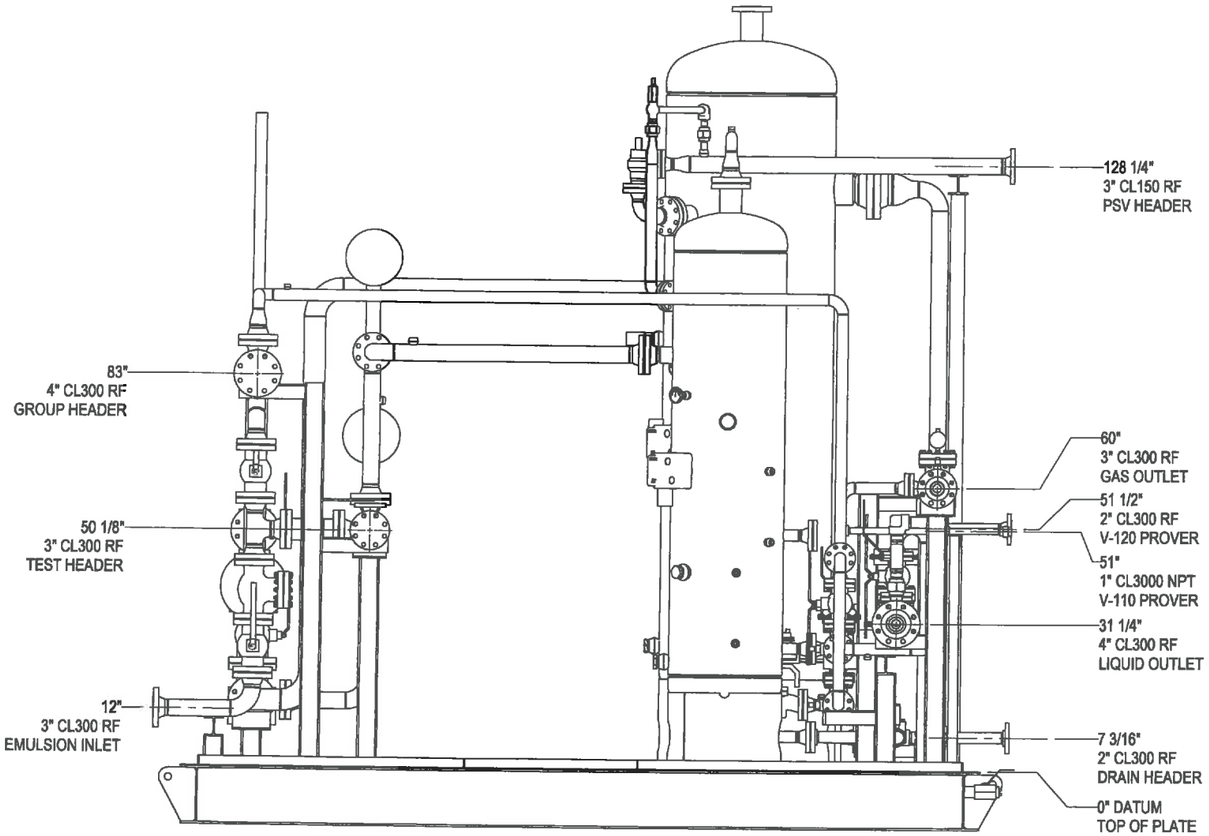

RIGHT VIEW
W/O BUILDING
SCALE: 1:32

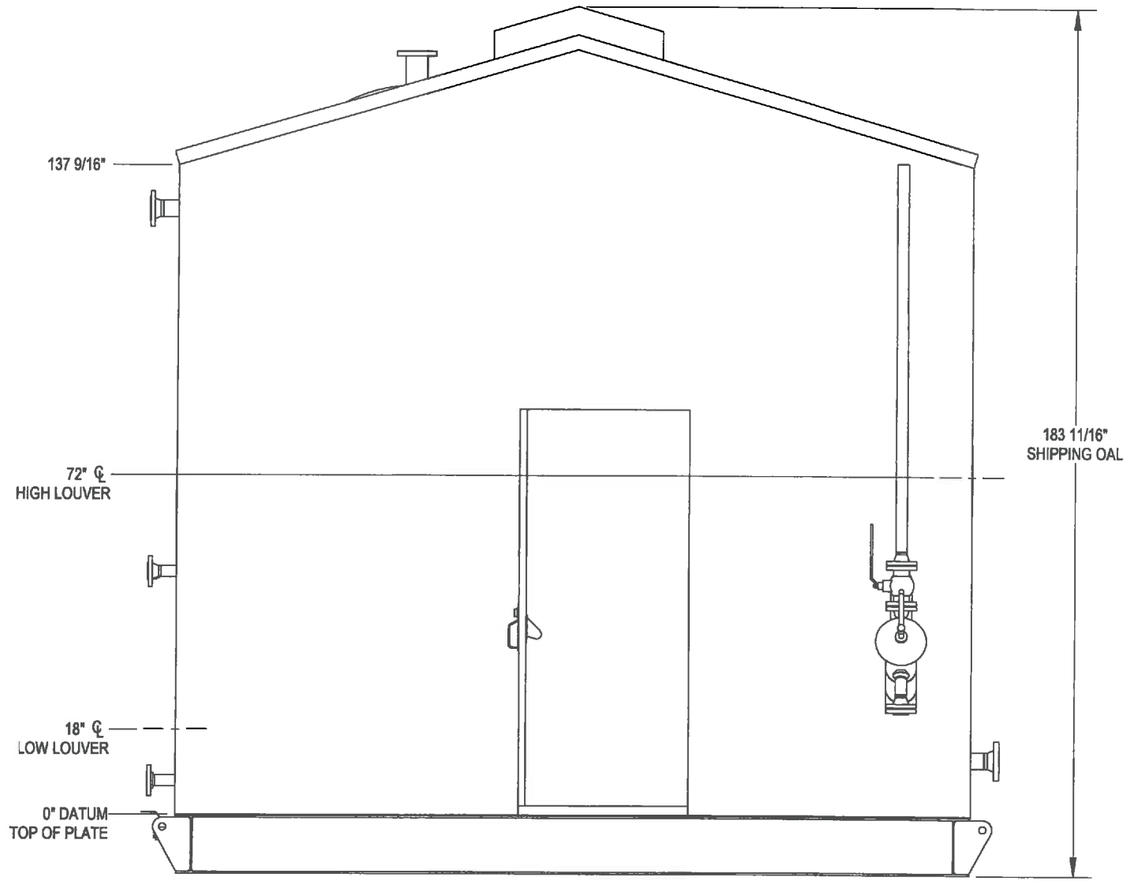

LEFT VIEW
SCALE: 1:32

ORIGINAL

REV.	DATE	BY:	CHK:	APP:	DESCRIPTION
1	OCT 29/13	PA	D	Jui	MODIFIED DWG 08784-003-W-007 SPOOL 7
0	SEP 09/13	PA	DF	GH	ISSUED FOR CONSTRUCTION

DRAWING REVISIONS

ISSUED FOR CONSTRUCTION
SIGNED:
DATE: NOV 01 2013
W.O.: 8784-004
S/N: NWP-08784-004
ALL DIMENSIONS IN INCHES

NWP INDUSTRIES INC.
Total oilfield supply.
P.O. BOX 6280, INNISFAIL, AB T4G 1S9
PH: (403) 227-4100 FAX: (403) 227-4102

PROJECTION:
SCALE: AS NOTED
WEIGHT: (APPROX. LES)

APACHE CANADA LTD C/O GENIVAR
DUAL SEPARATOR
LSD: 4-25-35-5 W4M
24" OD x 90" S/S TEST SEP. / 36" OD x 120" S/S GROUP SEP.

GENERAL ARRANGEMENT

DWN:	CHK:	APP:
PA	D	Jui
DATE: JUN 14/13	DATE: OCT 30 2013	DATE: 10/30/13

SHEET: 3 OF 3
DWG: 08784-003-G-001
REV: 1

COPYRIGHT © 2012 NWP THIS DRAWING IS PROPERTY OF NWP INDUSTRIES INC. AND MAY NOT BE REPRODUCED WITHOUT PERMISSION. THIS DRAWING MUST BE RETURNED UPON REQUEST.

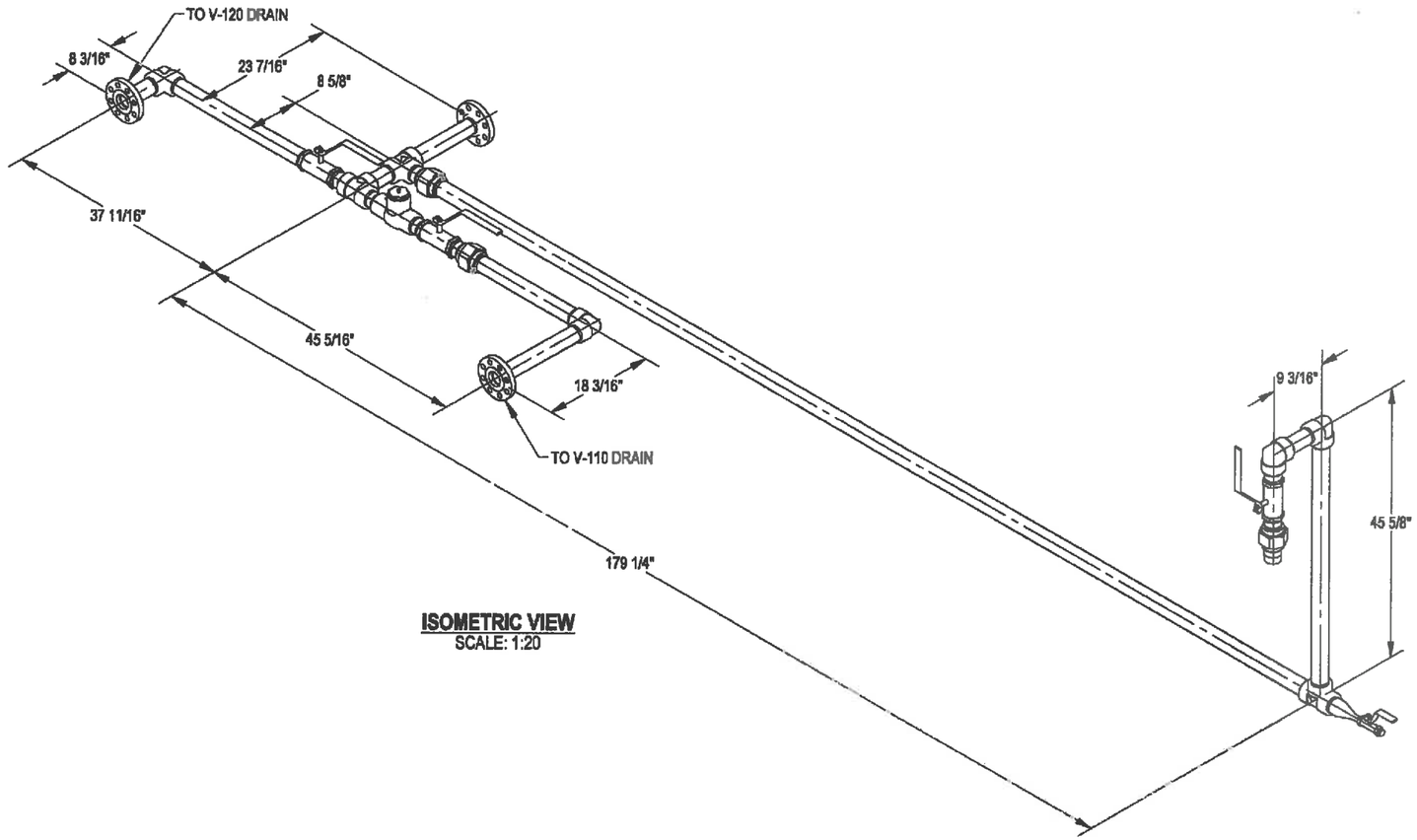

ISOMETRIC VIEW
SCALE: 1:20

ORIGINAL

THREADED PIPE DESIGN DATA	
LINE NUMBER:	-
CLIENT SPECIFICATION:	-
DESIGN AND FABRICATE TO:	ANSI / ASME B31.3 NFS 2012 EDITION
DESIGN PRESSURE:	720 PSI
MAX DESIGN METAL TEMPERATURE:	100 °F
MIN. DESIGN METAL TEMPERATURE:	-20 °F
HYDROSTATIC TEST PRESSURE:	1080 PSI
CORROSION ALLOWANCE:	1/8"
QUALITY CONTROL PROGRAM:	AQP-21640
JOINT SEALANT	JET LUBE TF-15
SERVICE:	HYDROCARBONS

REV.	DATE	BY:	CHK:	APP:	DESCRIPTION
0	JUL 17/13	PA			ISSUED FOR CONSTRUCTION

DRAWING REVISIONS

ISSUED FOR CONSTRUCTION
SIGNED: NOV 04 2013
DATE:
W.O.: 8784-004
S/N: NWP-08784-004
ALL DIMENSIONS IN INCHES

NWP INDUSTRIES INC.
Total oilfield supply.
P.O. BOX 6280, INNISFAIL, AB T4G 1S9
PH: (403) 227-4100 FAX: (403) 227-4102

APACHE CANADA LTD
DUAL SEPARATOR PACKAGE
24" OD x 7'-6" S/S 720 PSI VESSEL
SOUR HYDROCARBONS

PIPING ASSEMBLY

DWN: PA	CHK:	APP:
DATE: JUL 17/13	DATE: AUG 13 2013	DATE: AUG 13 2013

PROJECTION: | SCALE: AS NOTED | WEIGHT: (APPROX. LBS)

SHEET: 1 OF 1 | DWG: 08784-001-W-010 | REV: 0

COPYRIGHT © 2012 NWP THIS DRAWING IS PROPERTY OF NWP INDUSTRIES INC. AND MAY NOT BE REPRODUCED WITHOUT PERMISSION. THIS DRAWING MUST BE RETURNED UPON REQUEST.

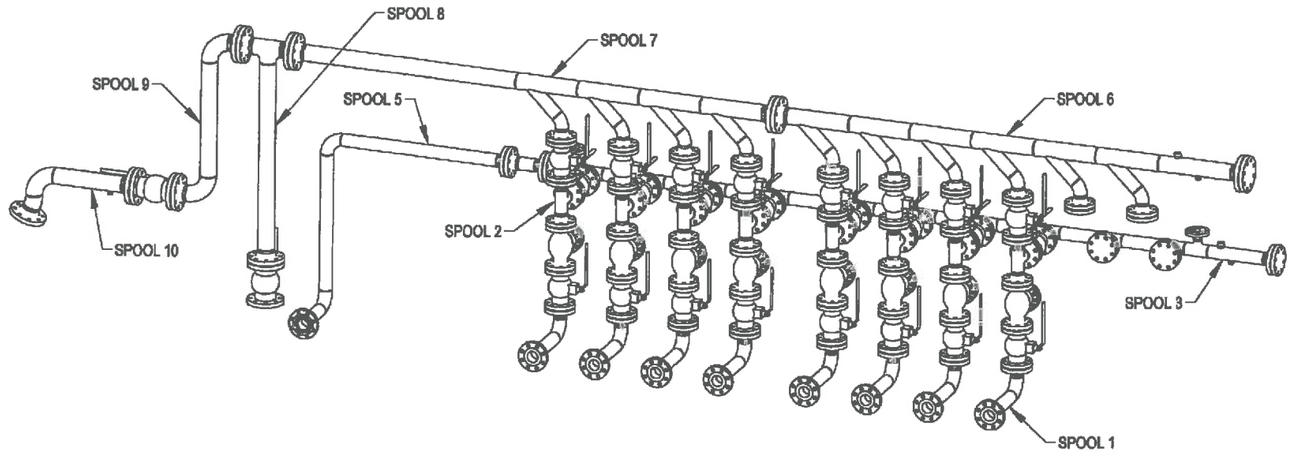

ISOMETRIC VIEW
SCALE: 1:40

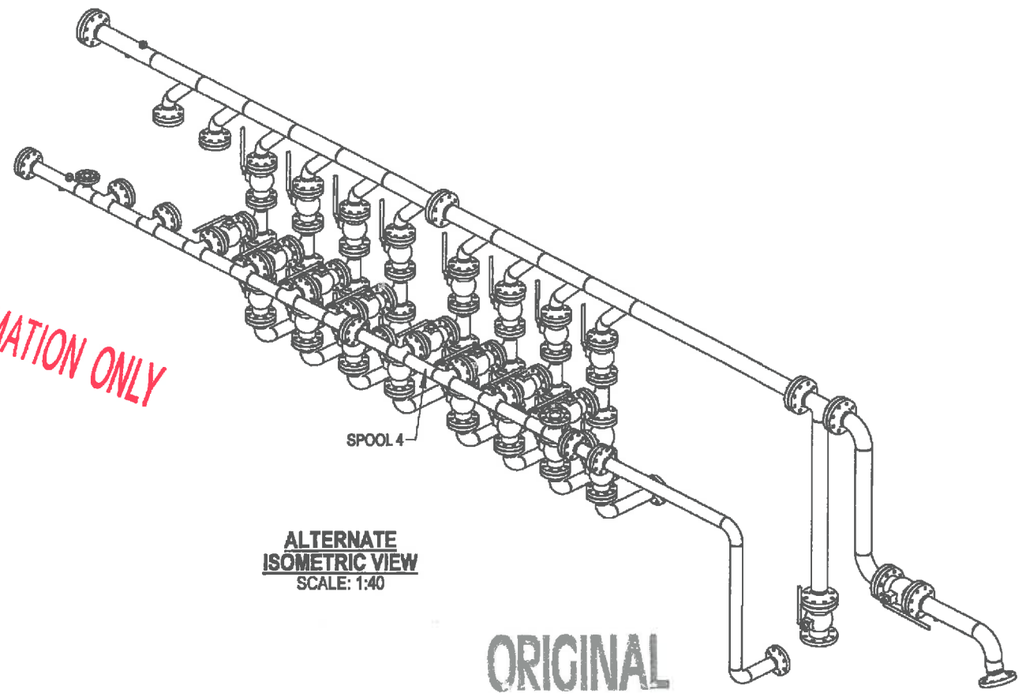

ALTERNATE ISOMETRIC VIEW
SCALE: 1:40

FOR INFORMATION ONLY

ORIGINAL

REV.	DATE	BY:	CHK:	APP:	DESCRIPTION
A	JUN 30/13	PA			ISSUED FOR CONSTRUCTION

DRAWING REVISIONS

ISSUED FOR CONSTRUCTION

SIGNED:

DATE: NOV 04 2013

W.O.: 8784-004

S/N: NWP-08784-004

ALL DIMENSIONS IN INCHES

NWP INDUSTRIES INC.
Total oilfield supply.
P.O. BOX 6280, INNISFAIL, AB T4G 1S9
PH: (403) 227-4100 FAX: (403) 227-4102

PROJECTION:

SCALE: AS NOTED

WEIGHT: 3837 (APPROX LBS)

APACHE CANADA LTD
DUAL SEPARATOR PACKAGE
24" OD x 7'-6" S/S 720 PSI VESSEL
SOUR HYDROCARBONS

PIPING ASSEMBLY

DWN:	CHK:	APP:
PA		
DATE: JUN 30/13	DATE: AUG 13 2013	DATE: AUG 13 2013

SHEET: 1 OF 14

DWG: 08784-001-W-001

REV: 0

COPYRIGHT © 2012 NWP THIS DRAWING IS PROPERTY OF NWP INDUSTRIES INC. AND MAY NOT BE REPRODUCED WITHOUT PERMISSION. THIS DRAWING MUST BE RETURNED UPON REQUEST.

BILL OF MATERIAL

ITEM	PART #	DESCRIPTION	MATERIAL	SIZE	QTY	MTR #
101	FRFWN3B40A	FLANGE: 3" CL300 RFWN SCH 40 BORE	SA-105N		2	
102	PIPBE340C	PIPE: 3" NOM SCH 40 BBE	SA-106-B SMLS	57 3/4"	1	

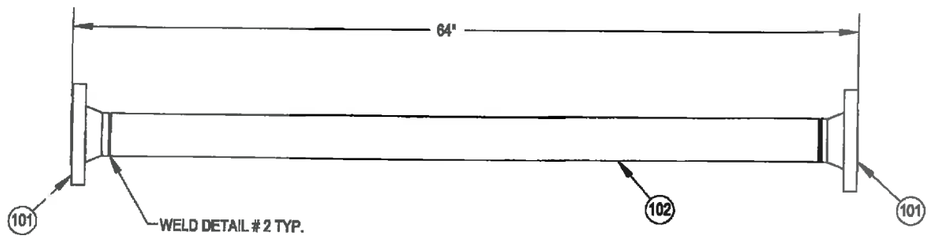

PLAN VIEW
SPOOL 1
SCALE: 1:12

BILL OF MATERIAL

ITEM	PART #	DESCRIPTION	MATERIAL	SIZE	QTY	MTR #
201	FLA3BYCE	Flange 3" 300 ANSI RFSO SA105N			2	
202	PIPBE340C	PIPE: 3" NOM SCH 40 BBE	SA-106-B SMLS	6 1/8"	1	

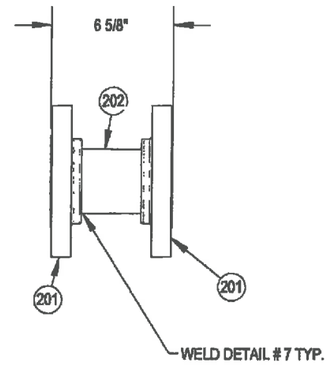

PLAN VIEW
SPOOL 2
SCALE: 1:8

ORIGINAL

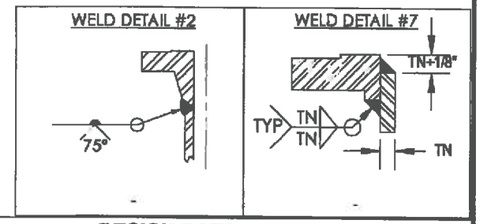

FOR INFORMATION ONLY

DESIGN DATA	
LINE NUMBER:	-
INTERNAL COATING:	NONE
CLIENT SPECIFICATION:	-
DESIGN AND FABRICATE TO:	B31.3 2012 EDITION NFS
DESIGN PRESSURE:	720 PSI
MAXIMUM DESIGN TEMPERATURE:	100°F
MINIMUM DESIGN TEMPERATURE:	-20°F
SERVICE:	HYDROCARBONS
HYDROSTATIC TEST PRESSURE:	1080 PSI
RADIOGRAPHY:	100%
OTHER NDE:	100% VISUAL
POST WELD HEAT TREATMENT:	NONE
CORROSION ALLOWANCE:	1/8"
Q.C. PROGRAM NO.:	AQP-21640
WELDING PROCEDURE REGISTRATION NO.:	WP-3221.2

REV.	DATE	BY:	CHK:	APP:	DESCRIPTION
0	AUG 22/13	MJH			ISSUED FOR CONSTRUCTION

DRAWING REVISIONS

ISSUED FOR CONSTRUCTION
SIGNED:
DATE: NOV 04 2013
W.O.: 8784-004
S/N: NWP-08784-004
ALL DIMENSIONS IN INCHES

NWP INDUSTRIES INC.
Total oilfield supply.
P.O. BOX 6280, INNISFAIL, AB T4G 1S9
PH: (403) 227-4100 FAX: (403) 227-4102

PROJECTION:
SCALE: AS NOTED
WEIGHT: (APPROX. LBS)

APACHE CANADA LTD
DUAL SEPARATOR PACKAGE
24" OD x 7'-6" S/S 720 PSI VESSEL
SOUR HYDROCARBONS

WELDED PIPING ASSEMBLY

DWN:	CHK:	APP:
MJH		
DATE: AUG 22/2013	DATE: AUG 26 2013	DATE: AUG 26 2013

SHEET:	DWG:	REV:
1 OF 1	08784-001-W-011	0

COPYRIGHT © 2012 NWP THIS DRAWING IS PROPERTY OF NWP INDUSTRIES INC. AND MAY NOT BE REPRODUCED WITHOUT PERMISSION. THIS DRAWING MUST BE RETURNED UPON REQUEST.