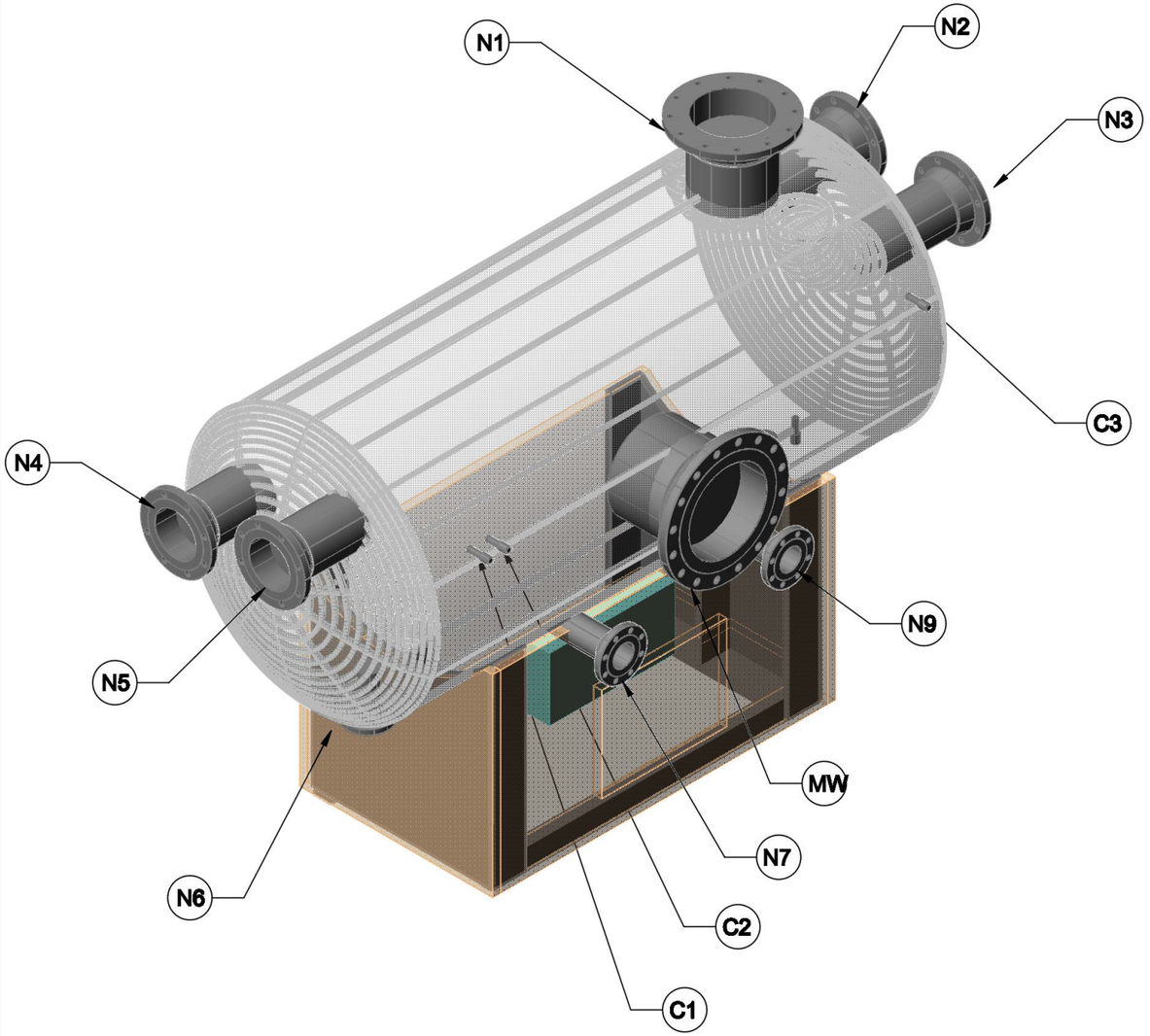

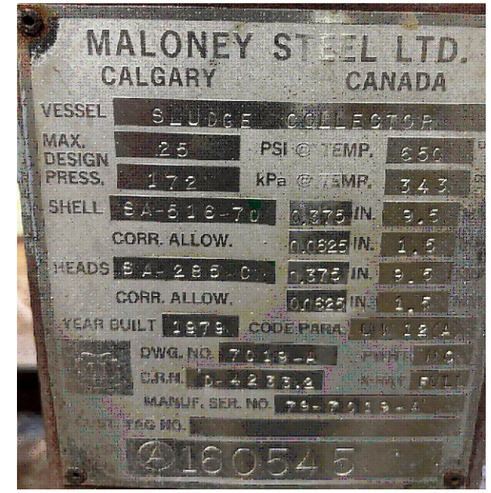

TAG	SIZE	TYPE	DRAIN
N1	12"	150# RFWN	
N2	8"	150# RFWN	
N3	8"	150# RFWN	
N4	8"	150# RFWN	
N5	8"	150# RFWN	
N6	8"	150# SORF	
MW	16"	150# RFWN	
N7	4"	150# RFWN	ANODE ROD
N8	4"	150# RFWN	ANODE ROD
C1	1/2"	3000# HC	
C2	1/2"	3000# HC	
C3	1/2"	3000# HC	
C4	1/2"	3000# HC	

NOTES:
- ADD 4" CHANNEL TO SUPPORT INSULATED PANELS
- ADD INSULATED SANDWICH PANELS TO VESSEL UNDERSIDE
- ADD 12 X 24, 12V CATADYNE IN INSULATED ENCLOSURE.

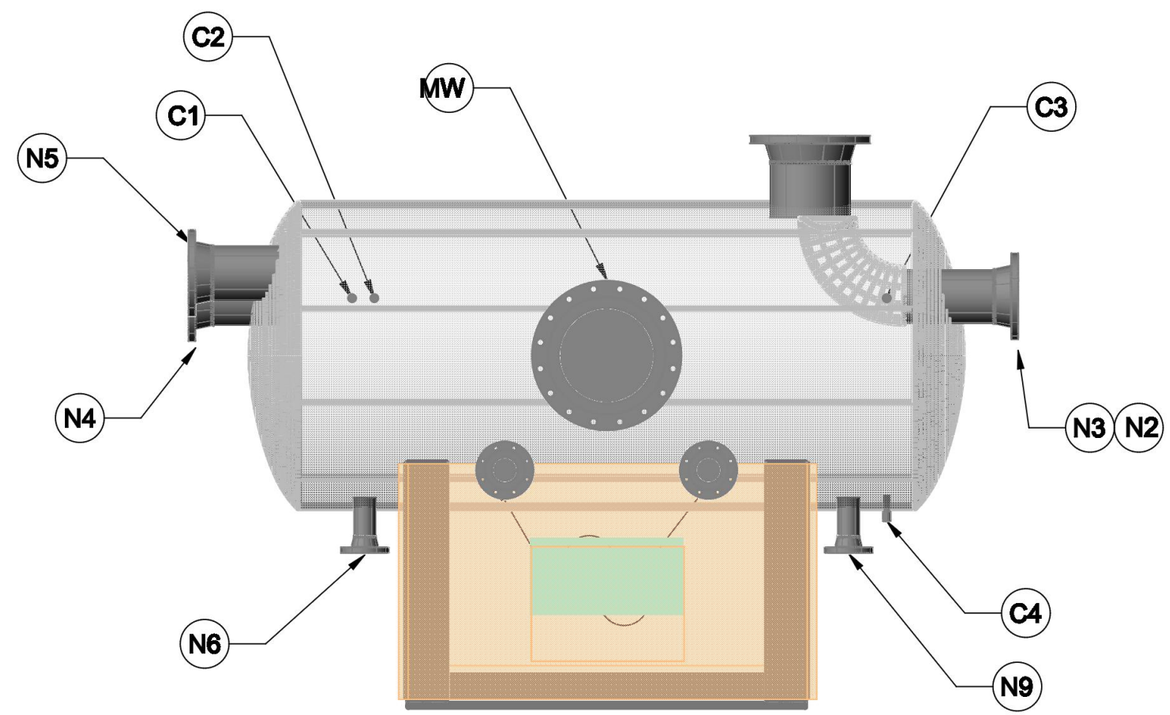

REV	DESC	BY	DATE

REVISIONS

RARE OILFIELD SERVICES
502 MITCHELL DRIVE SE
REDCLIFF, ALBERTA,
T0J 2P0

RARE EQUIPMENT #
16218 - SLIDGE CATCHER

DATE
JULY 6, 2026

DRAWN BY
K HOBMAN

DRAWING TITLE
16044 - SLUDGE CATCHER
ORIGINAL BUILD BY MALONEY STEEL
GENERAL ARRANGEMENT
SHEET 2 OF 3

FILE NAME
16218 25BBL SLUG CATCHER AS BUILT

LAYOUT NAME
SHT 2

REVISION
A

REVISION DATE