DESIGN NOTES:

GENERAL:
1.0. REFERENCED CODES SHALL BE THE LATEST EDITIONS UNLESS OTHERWISE NOTED.
1.1. DIMENSIONS ARE IN INCHES UNLESS NOTED OTHERWISE.
1.2. DO NOT SCALE DRAWINGS.

WELDING:
2.0. ALL WELDING PROCEDURES SHALL FOLLOW SHIELD INDUSTRIES STANDARD WELD PROCEDURES
- 2.0.1. P1 GROUPS 1 & 2 TP P1 GROUPS 1& 2(SA 333 GR. 6, AS 350 GR. LFS, SA 420 WPL6, SA 516 GR 70, ETC.) USE SIL-4
- 2.0.2. P1 TO P1 (SA 36, SA 106 GR B, SA 105, SA 516 GR 70 ETC) USE SIL-5
- 2.0.3. LADDERS/PLATFORMS/STRUCTURAL MC-01/MC-02/MC-03/MC-04

2.1. ALL FILLET WELDS ARE MIN 1/4" (6mm) UNLESS OTHERWISE STATED.

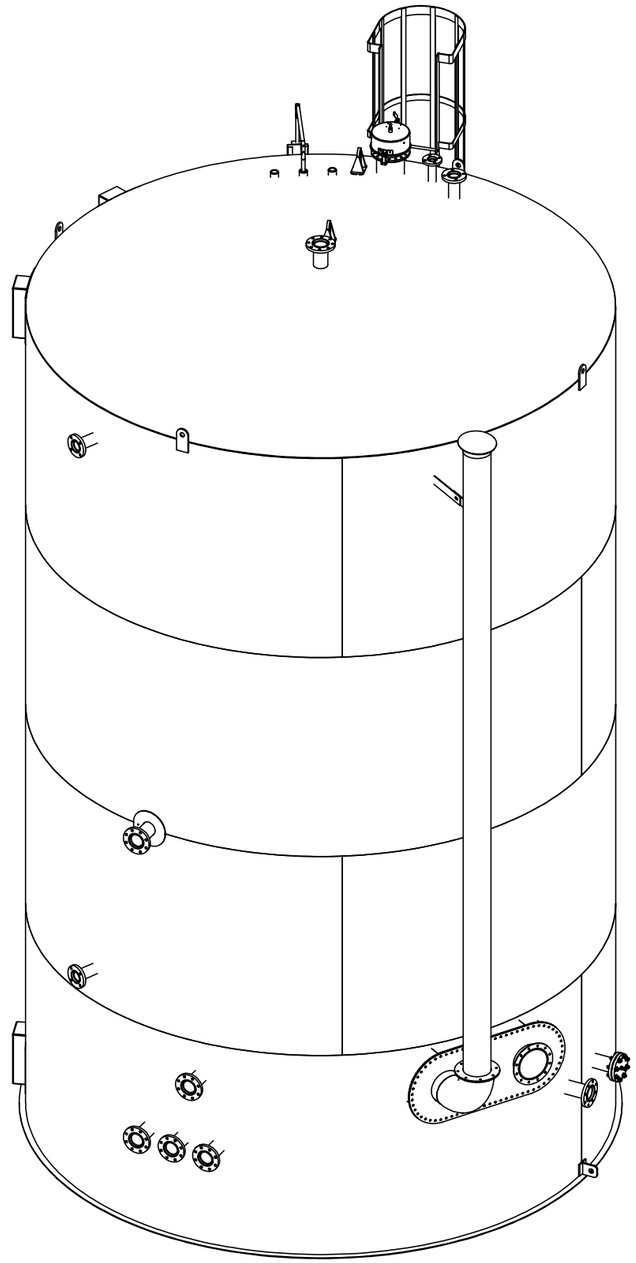

TANK SPECIFICATIONS

PROJECT:	750BBL PRODUCTION TANKS
TITLE:	750BBL PRODUCTION TANKS
TANK #:	102-052
DESIGN CODE:	API 12F
DESIGN PRESSURE:	8 OZ
TEST PRESSURE:	12 OZ
DESIGN TEMPERATURE:	-29 °C , 93 °C
SERVICE:	SWEET
VACCUM:	0.4 OZ
CORROSION ALLOWANCE:	N/A
TEST:	SOAP & WATER
OTHER:	N/A
COATING SPECS	
INTERIOR PREP:	BLAST (SSPC-SP5)
INTERIOR COATING:	APPLY 10-14 MILS EC 2405 TO ENTIRE TANK
EXTERIOR PREP:	BLAST (SSPC-SP14)
EXTERIOR COATING:	APPLY 1.5" URETHANE INSULATION
C/W BLACK ELASTOMERIC	
UNDER SIDE PREP:	
UNDERSIDE COATING:	
TANK DESIGN	
ROOF:	3/16"
BOT SHELL:	3/16"
TYP SHELL:	3/16"
FLOOR:	1/4"
SHIPPING DIMENSIONS	
HEIGHT:	16'0"
WIDTH:	16'7"
LENGTH:	26'0"
WEIGHT:	16500lb

NOTES:

1. ALTHOUGH ALL DIMENSIONS ARE BELIEVED TO BE TRUE, WORKER IS TO NOTIFY FOREMAN OF ANY ERRORS OR DISCREPANCIES IMMEDIATLY.

WELD DETAILS

FLAT + HOR.	VERT. DOWN HAND	ALL	FLAT HOR.	FLAT HOR.	FLAT + HOR.	FLAT + HORZ.	VERT.
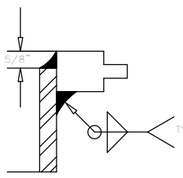	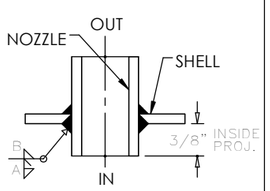	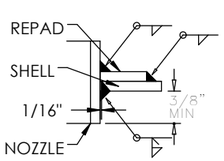	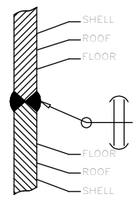	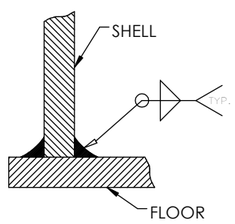	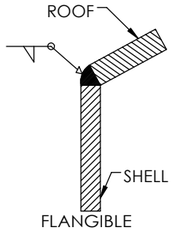	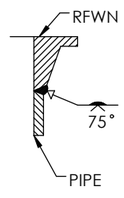	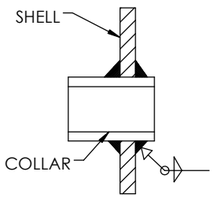
RFSO TO NOZZLE	NOZZLE TO SHELL	REPAD TO SHELL	TYP. BUTT WELD	FLOOR TO SHELL	FLANGIBLE ROOF TO SHELL	RFWN TO NOZZLE	CPLG TO SHELL
DETAIL 1	DETAIL 2	DETAIL 3	DETAIL 4	DETAIL 5	DETAIL 6	DETAIL 7	DETAIL 8

REV.	DESCRIPTION	DATE	DRW	CHK	APP
5	ADDED ANODE (AS BUILT)	30/11/2018	MJB	AG	AG
4	ISSUED FOR CONSTRUCTION	25/10/2018	MJB	AG	AG
3	AS PER MARK UPS	24/10/2018	SLJ	MJB	
2	AS PER MARK UPS	15/10/2018	SLJ	MJB	
1	REVISED AS PER CLIENT MARK UPS	27/09/2018	SLJ	MJB	
0	ISSUED FOR REVIEW	21/09/2018	SLJ	MJB	-

REVISIONS

CLIENT: TUNDRA ENGINEERING INC

C/O:

SHIELD INDUSTRIES LTD.

PROJECT: 750BBL PRODUCTION TANKS

TITLE: 750BBL PRODUCTION TANKS
15'3" OD x 24'0" HIGH SINGLE WALL CONTAINMENT TANK

DATE DRAWN: MM/DD/YYYY	SCALE:	SHEET No.	FILE NAME	REV. No.
21/09/2018	AS NOTED	1 OF 6	18-6169-2052-1.0	5

PROPIETARY AND CONFIDENTIAL: THE INFORMATION CONTAINED IN THIS DRAWING IS THE SOLE PROPERTY OF SHIELD INDUSTRIES. ANY REPRODUCTION IN PART OR AS A WHOLE WITHOUT THE WRITTEN PERMISSION OF SHIELD INDUSTRIES IS PROHIBITED.

ATTACHMENT ORIENTATION SCHEDULE

NO.	SIZE	DESCRIPTION	SCH	RPD	LOC	ELEV
N1	3"	150# RFSO SFF FLANGE (LSHH)	80		202°	23'-0"
N2	3"	150# RFSO DFF FLANGE (LSLL)	80		202°	7'-0"
N3	4"	150# RFSO DFF FLANGE (VENT GAS OUT) C/W RISER	40	X	SEE PLAN	12'-0"
N4	4"	150# RFSO DF FFLANGE (SPILL OVER) C/W RISER	40		0°	3'-0"
N5	2"	150# RFSO SFF FLANGE (BLANKET GAS)	80		358°	ROOF
N6	4"	150# RFSO SFF FLANGE (SPARE)	40		CENTER	ROOF
N7	4"	150# RFSO DFF FLANGE (TRUCK OVER) C/W DOWNCOMER	40		SEE PLAN	3'-0"
N8	4"	150# RFSO DFF FLANGE (EMULSION)	40		SEE PLAN	3'-0"
N9	4"	150 # RFSO SFF FLANGE (ANODE) CW ANODE ASSEMBLY	40		SEE PLAN	3'-0"
N10	4"	150 # RFSO SFF FLANGE (SPARE)	40		SEE PLAN	3'-0"
N11	4"	150# RFSO DFF FLANGE C/W DOWNCOMER	40		SEE PLAN	5'-0"
N12	3"	150# RFSO SSF FLANGE	40		7°	ROOF
C1	1 1/2"	3000# FULL CPLG (TGS LEVEL TRANS) CW 5010 GAUGE HEAD			328°	ROOF
C2	1 1/2"	3000# FULL CPLG (GUIDE WIRE) CW PLUG			SEE PLAN	ROOF
C3	1 1/2"	3000# FULL CPLG (GUIDE WIRE) CW PLUG			SEE PLAN	ROOF
A1	STD	CAGED LADDER			348°	SEE ELEV
A2	STD	TRANPORTATION SUPPORTS		X	SEE PLAN	STD
F1	10"	HORIZONTAL FIRETUBE & FLANGE ASSEMBLY	40		135°	5'0"
T1	8"	API FLANGE (THIEF HATCH) C/W PRISM THEF HATCH	40		348°	ROOF
G1	STD	TGS 5010 GUAGE BOARD ASSEMBLY			328°	STD
M1	24"X36"	STD SHIELD'S 24 X36 MANWAY		X	32°	2'-6"
L1	STD	LIFTING LUGS			270°	STD
L2	STD	LIFTING LUGS			0°	STD
L3	STD	LIFTING LUGS			90°	STD
L4	STD	LIFTING LUGS			180°	STD
L5	STD	TAIL LUG		X	90°	3"
L6	STD	GROUND LUG			45°	STD
L7	STD	HARNESS LUG		X	341°	ROOF
L8	STD	HARNESS LUG		X	341°	ROOF

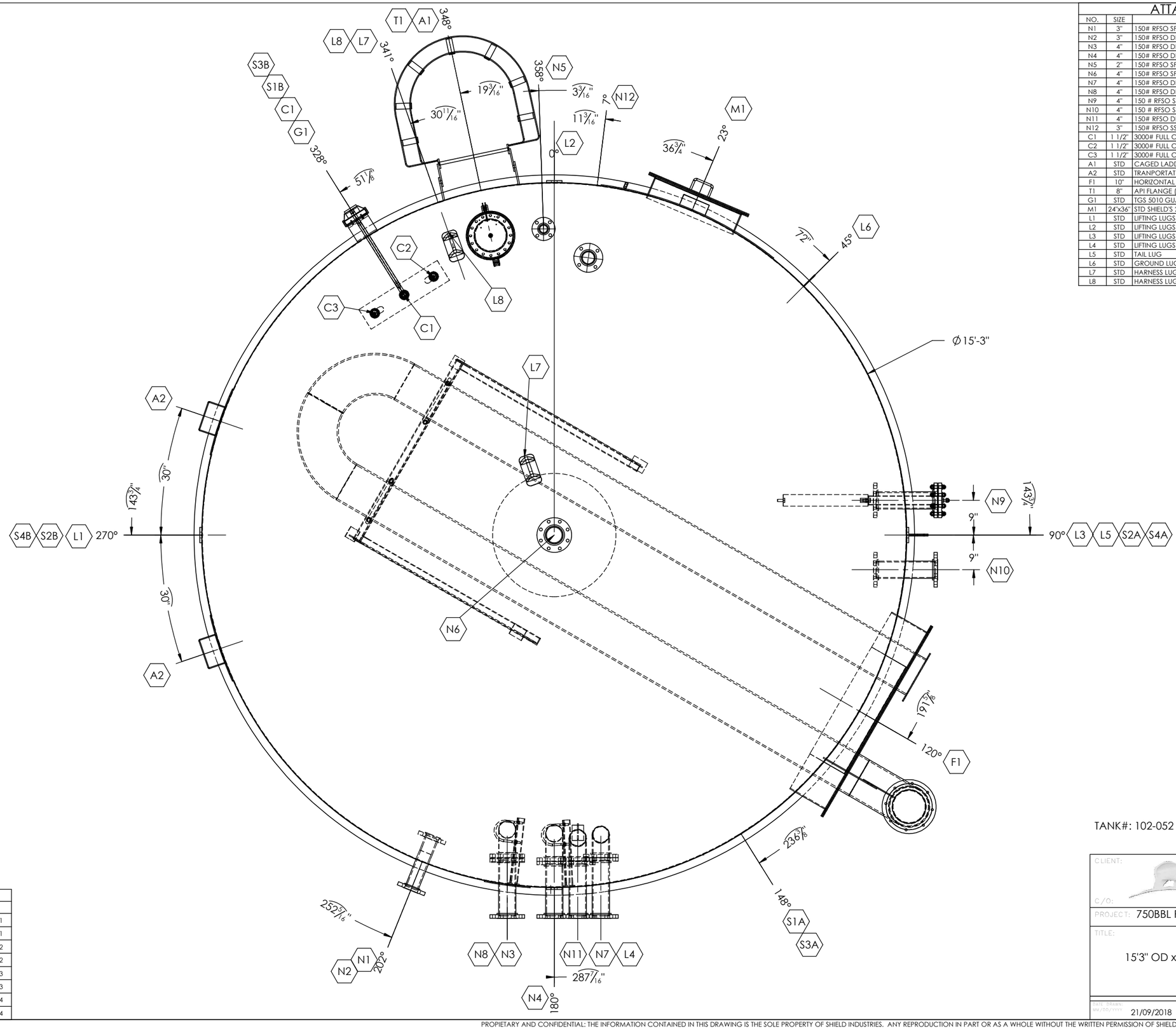

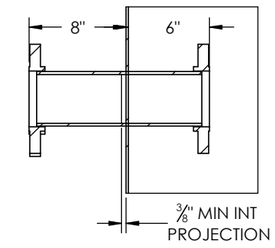

TYP NOZZLE PROJECTION

SEAM SCHEDULE			
NO.	DESCRIPTION	LOC.	ELEV.
S1A	VERTICAL SEAM	148°	RING 1
S1B	VERTICAL SEAM	328°	RING 1
S2A	VERTICAL SEAM	90°	RING 2
S2B	VERTICAL SEAM	270°	RING 2
S3A	VERTICAL SEAM	148°	RING 3
S3B	VERTICAL SEAM	328°	RING 3
S4A	VERTICAL SEAM	90°	RING 4
S4B	VERTICAL SEAM	270°	RING 4

TANK#: 102-052

CLIENT:

C/O: TUNDRA ENGINEERING INC

SHIELD INDUSTRIES LTD.

PROJECT: 750BBL PRODUCTION TANKS

TITLE:

750BBL PRODUCTION TANKS
15'3" OD x 24'0" HIGH SINGLE WALL CONTAINMENT TANK

DATE: (DD/MM/YYYY)	SCALE:	SHEET No.	JOB No.	REV. No.
21/09/2018	AS NOTED	2 OF 6	18-6169-2052-1.0	5

PROPIETARY AND CONFIDENTIAL: THE INFORMATION CONTAINED IN THIS DRAWING IS THE SOLE PROPERTY OF SHIELD INDUSTRIES. ANY REPRODUCTION IN PART OR AS A WHOLE WITHOUT THE WRITTEN PERMISSION OF SHIELD INDUSTRIES IS PROHIBITED.

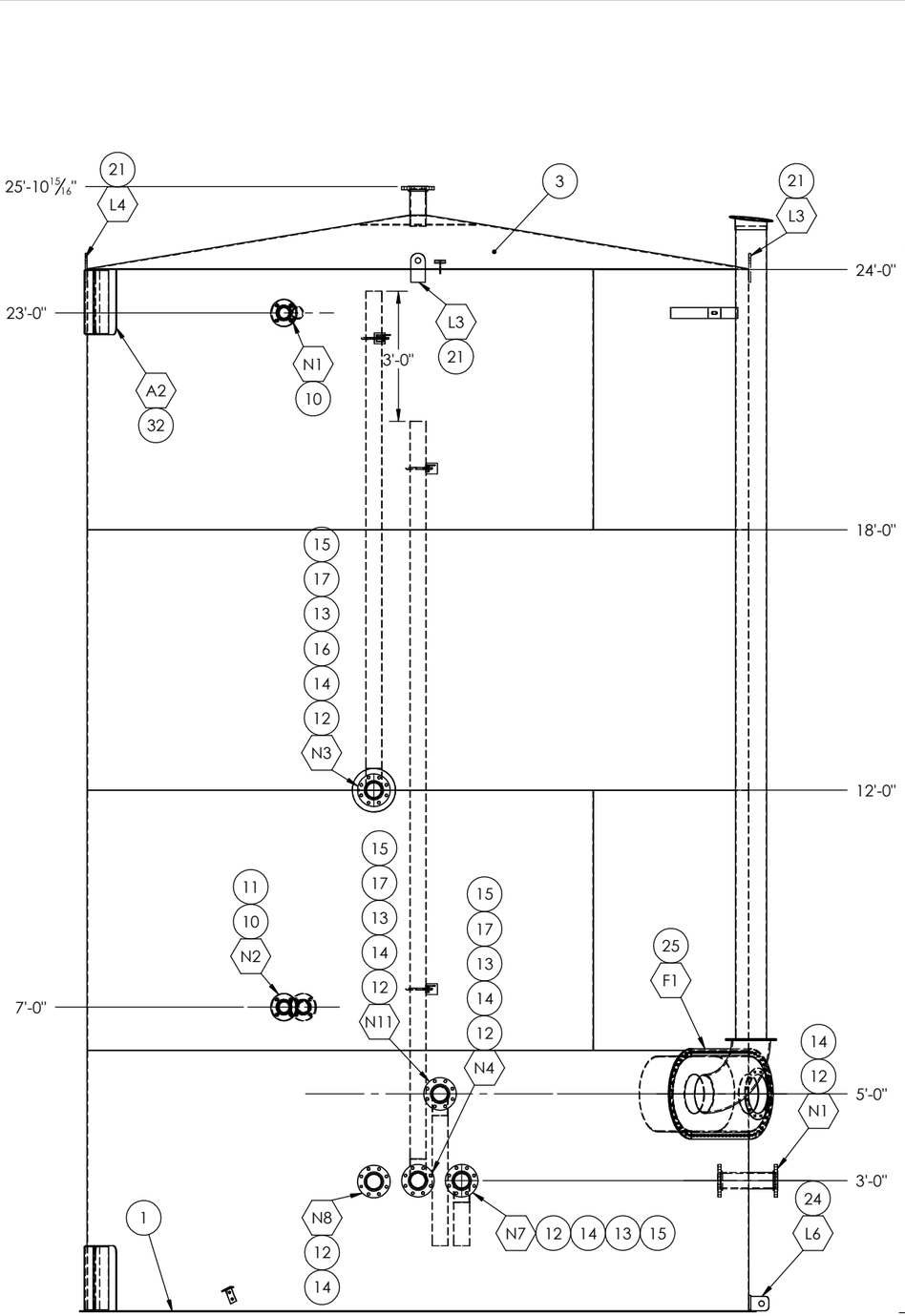

ELEVATION VIEW
90° - 270°

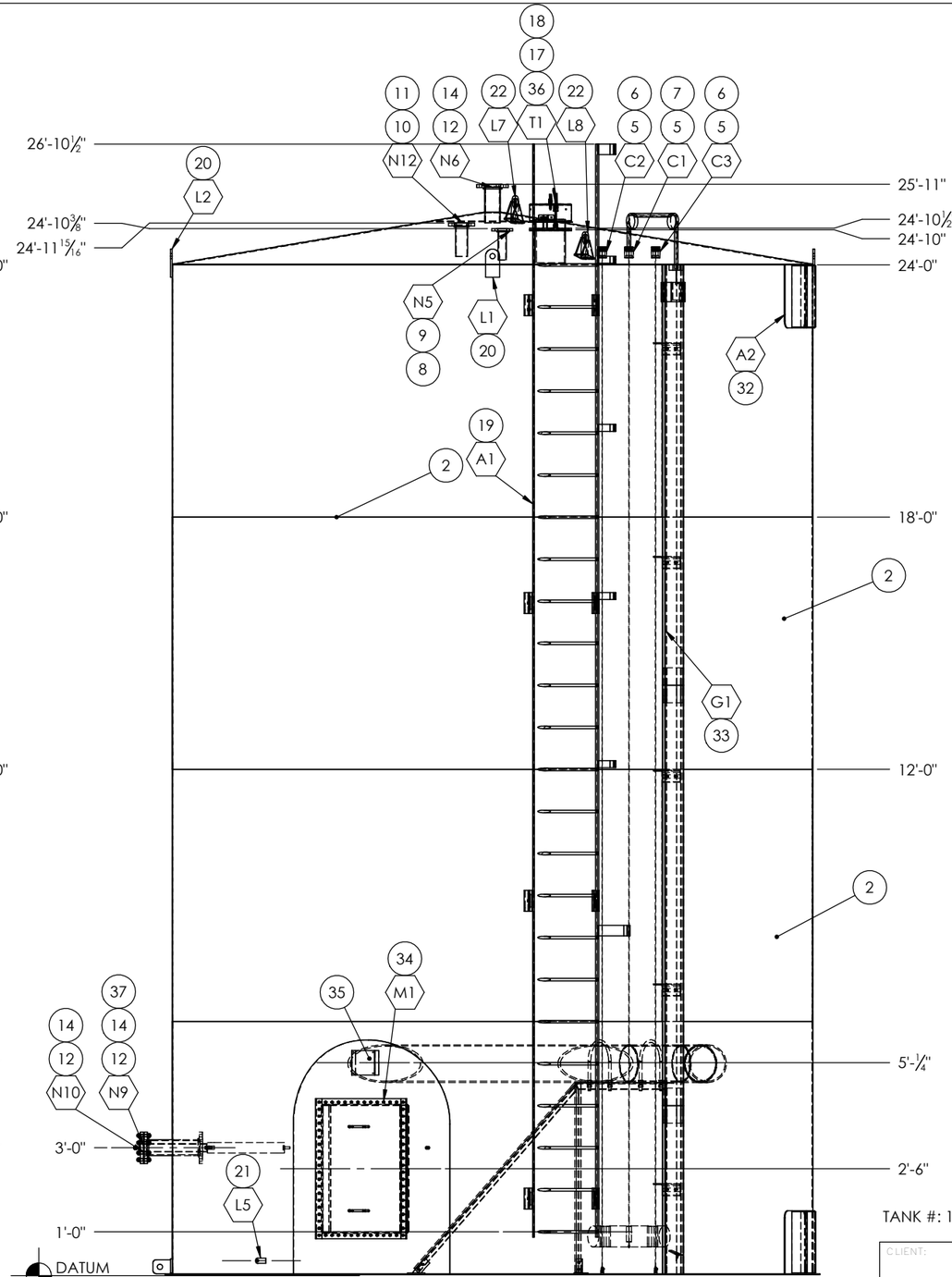

ELEVATION VIEW
270° - 90°

NOTE:
-SEE PLAN VIEW FOR TRUE ORIENTATION OF ALL FITTING ETC.
-ALL TAILED DIMENSIONS TAKEN FROM DATEM LINE (TOP OF FLOOR PLATE)

ITEM	QTY.	DESCRIPTION	Material
1	1	FLOOR PLATE 1/4" - 15'-7" OD	G40.21-44W
2	4	SHELL PLATE 3/16" - 2 - 3'-11 1/2" X 6'-0"	G40.21-44W
3	1	ROOF PLATE 3/16" - 15'2 3/4" FIN OD	G40.21-44W
4	1	ROOF REPAD (PLATE 1/4" X 32OD)	ASTM A36 Steel
5	3	1 1/2" - 3000# FULL COUPLING	SA-105N
6	2	1 1/2" HEX HEAD PLUG	SA-105N
7	1	BUSHING 1 1/2" X 3/4"	SA-105N
8	1	2" PIPE Sch 80	SA-106B
9	1	2" 150# RFSO FLANGE	SA-105N
10	4	3" 150# RFSO FLANGE	SA-105N
11	2	3" PIPE Sch 80	SA-106B
12	15	4" 150# RFSO FLANGE	SA-105N
13	8	4" PIPE Sch 40	SA-106B
14	4	4" 150# RFSO FLANGE	316SS
15	2	4" 90 deg ELBOW Sch 10	316SS
16	4	4" PIPE Sch 10	316SS
17	1	8" API FLANGE	ASTM A36 Steel
18	1	8" PIPE Sch 40	SA-106B
19	1	STD SHIELD'S 26FT LADDER	ASTM A36 Steel
20	4	LIFTING LUG 1000 BBL & SMALLER	50W
21	1	STD- GROUNDING LUG	ASTM A36 Steel
22	2	STD SHIELD'S HARNESS LUG	ASTM A36 Steel
23	1	TAILING LUG 1000 BBL & SMALLER	50W
24	1	10" FIRE TUBE ASSEMBLY	
25	3	4" Ubolt Assembly	316SS
26	3	PIPE SUPPORT - L 2"X2"X 1/4" X FB 1/4"X 3"	316SS
27	1	STAND FOR FIRE TUBE	316SS
28	2	STD - FLOOR TAB	316SS
29	2	ANGLED FLOOR TAB	316SS
30	2	10" UBOLT ASSEMBLY	316SS
31	1	STD SHIELDS PIPE LIFTING LUG	316SS
32	2	STD SHIELD'S 18" TRANSPORT SUPPORT	ASTM A36 Steel
33	1	TGS-5010 GAUGE SYSTEM	
34	1	24" X 36" STD SHIELD'S MANWAY	ASTM A36 Steel
35	1	STD SHIELD'S DATA PLATE BRACKET	ASTM A36 Steel
36	1	PRISM 8" API THIEF HATCH	-
37	1	3" ALUMINUM ANODE ASSEMBLY	ALUMINUM
38	2	4" 90 deg ELBOW Sch 40	SA-106B
39	1	3" PIPE Sch 40	SA-106B
40	1	4" - PIPE REPAD	G40.21-44W

TANK #: 102-052

CLIENT:
C/O:
TUNDRA ENGINEERING INC
SHIELD INDUSTRIES LTD.

PROJECT: 750BBL PRODUCTION TANKS

TITLE:
750BBL PRODUCTION TANKS
15'3" OD x 24'0" HIGH SINGLE WALL CONTAINMENT TANK

Date Issued MM/DD/YYYY	Scale	Sheet No.	Drawing No.	Rev. No.
21/09/2018	AS NOTED	3 OF 6	18-6169-2052-1.0	5

PROPIETARY AND CONFIDENTIAL: THE INFORMATION CONTAINED IN THIS DRAWING IS THE SOLE PROPERTY OF SHIELD INDUSTRIES. ANY REPRODUCTION IN PART OR AS A WHOLE WITHOUT THE WRITTEN PERMISSION OF SHIELD INDUSTRIES IS PROHIBITED.

ITEM	QTY.	DESCRIPTION	LENGTH	Material
1	1	Flatbar - 1/4" x 3"	3"	316SS
2	1	L2x2x0.25	15"	316SS

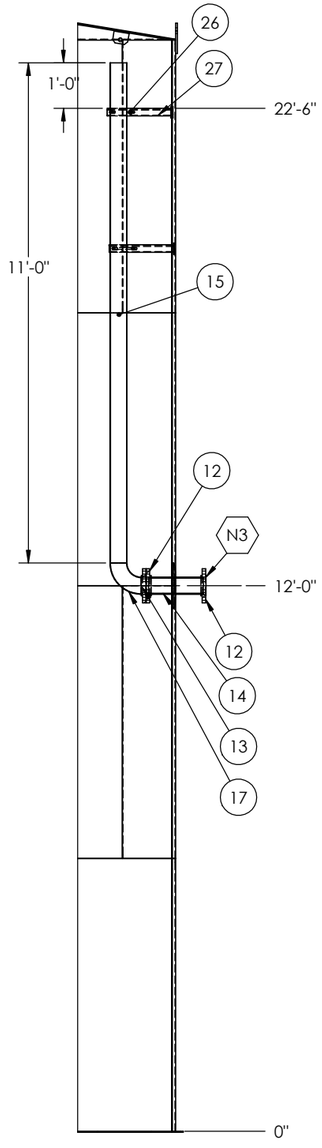

DETAIL N3

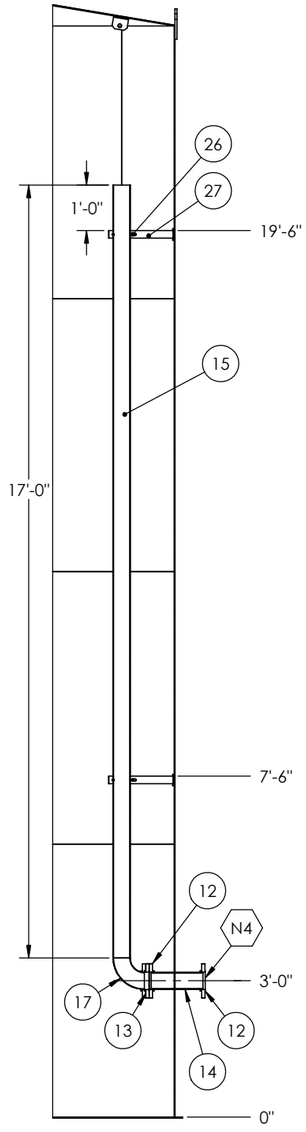

DETAIL N4

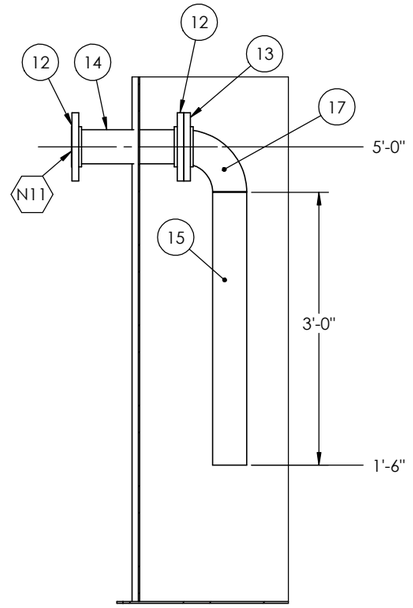

DETAIL N11

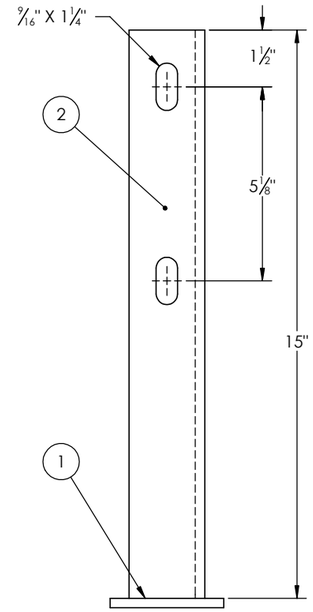

DETAIL 27

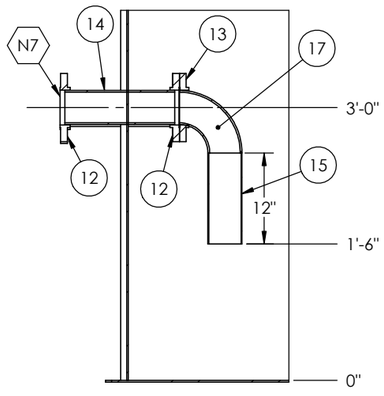

DETAIL N7

TANK #:102-052

CLIENT:
C/O:
TUNDRA ENGINEERING INC
SHIELD INDUSTRIES LTD.

PROJECT: 750BBL PRODUCTION TANKS

TITLE:
750BBL PRODUCTION TANKS
15'3" OD x 24'0" HIGH SINGLE WALL CONTAINMENT TANK

DATE: DRAWN: MM/DD/YYYY	SCALE:	SHEET No.:	DRAWING No.:	REV. No.:
21/09/2018	AS NOTED	4 OF 6	18-6169-2052-1.0	5

PROPIETARY AND CONFIDENTIAL: THE INFORMATION CONTAINED IN THIS DRAWING IS THE SOLE PROPERTY OF SHIELD INDUSTRIES. ANY REPRODUCTION IN PART OR AS A WHOLE WITHOUT THE WRITTEN PERMISSION OF SHIELD INDUSTRIES IS PROHIBITED.

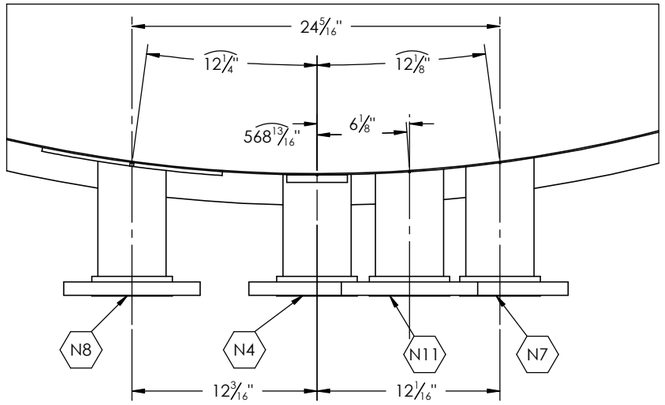

DETAIL N4, N7, N8, N11 BANK

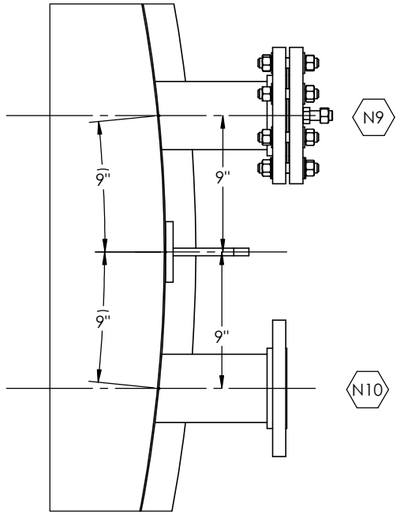

DETAIL N9 / N10

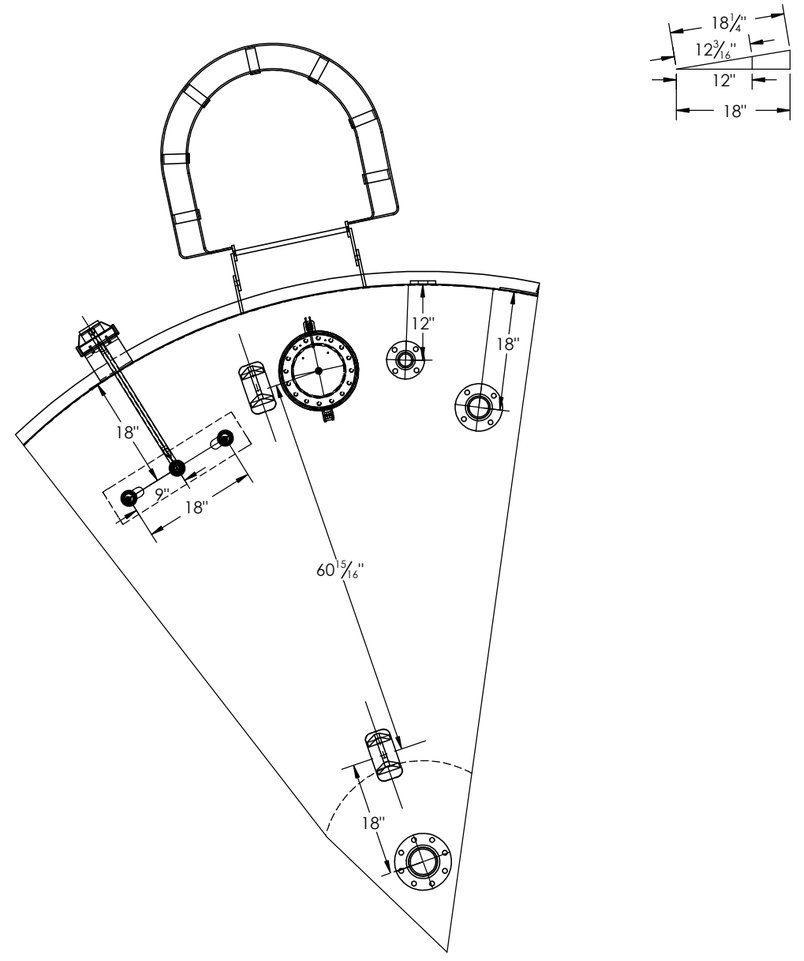

ROOF NOZZLE LACATION
(DIMENSIONS ARE ALONG THE HORIZONTAL PLANE)

TANK #:102-052

CLIENT: TUNDRA ENGINEERING INC

C/O:

SHIELD INDUSTRIES LTD.

PROJECT: 750BBL PRODUCTION TANKS

TITLE: 750BBL PRODUCTION TANKS
15'3" OD x 24'0" HIGH SINGLE WALL CONTAINMENT TANK

DATE DRAWN: MM/DD/YYYY	SCALE:	SHEET No.	FILE NAME:	REV No.
21/09/2018	AS NOTED	5 OF 6	18-6169-2052-1.0	5

PROPIETARY AND CONFIDENTIAL: THE INFORMATION CONTAINED IN THIS DRAWING IS THE SOLE PROPERTY OF SHIELD INDUSTRIES. ANY REPRODUCTION IN PART OR AS A WHOLE WITHOUT THE WRITTEN PERMISSION OF SHIELD INDUSTRIES IS PROHIBITED.

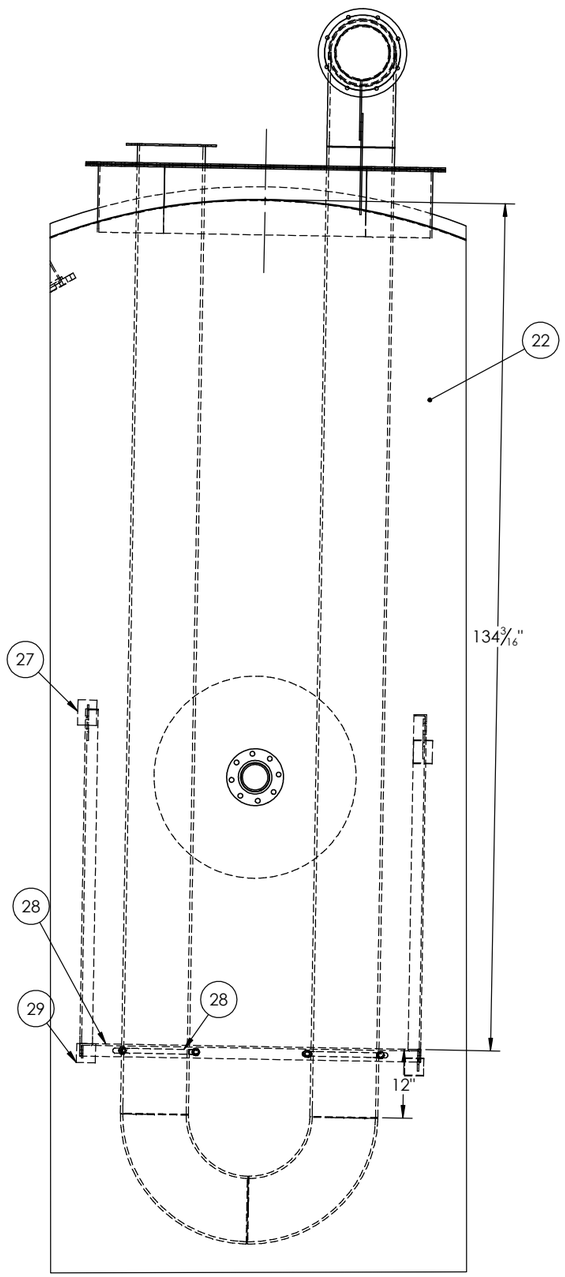

DETAIL F1

ITEM	QTY.	DESCRIPTION	LENGTH	Material
1	1	STAND FOR FIRE TUBE		316SS
2	1	L2x2x0.25	54 1/8"	316SS
3	1	L2x2x0.25	54 1/8"	316SS
4	1	L2x2x0.25	75"	316SS
5	1	L2x2x0.25	75"	316SS
6	1	L2x2x0.25	54"	316SS

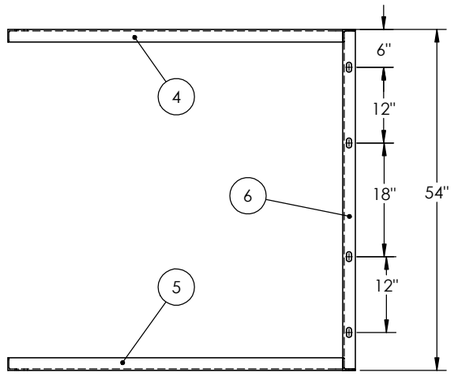

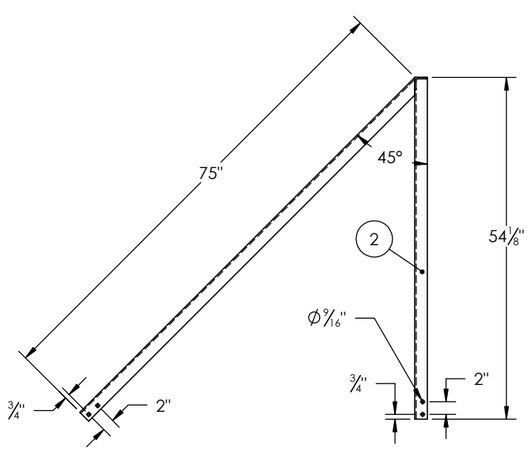

ITEM	QTY.	DESCRIPTION	LENGTH	Material
1	1	STD - FLOOR TAB		316SS
	1	PLATE 1/4" - 3" X 3"	3"	316SS
	1	PLATE 1/4" - 4" X 2"	4"	316SS

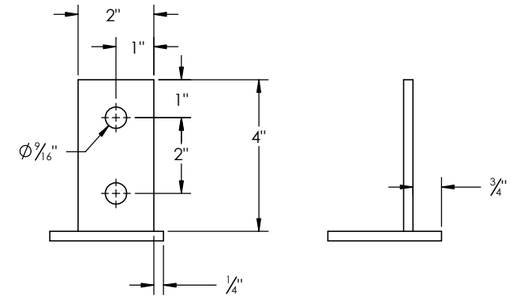

ITEM	QTY.	DESCRIPTION	LENGTH	Material
1	1	ANGLED FLOOR TAB		316SS
	1	PLATE 1/4" - 3" X 3"	4"	316SS
	1	Flatbar - 1/4" x 2"	6"	

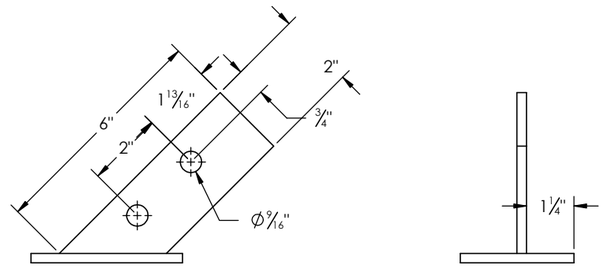

TANK #:102-052

CLIENT: TUNDRA ENGINEERING INC

C/O:

SHIELD INDUSTRIES LTD.

PROJECT: 750BBL PRODUCTION TANKS

TITLE:

750BBL PRODUCTION TANKS

15'3" OD x 24'0" HIGH SINGLE WALL CONTAINMENT TANK

DATE: DRAWN: MM/DD/YYYY	SCALE:	SHEET NO.:	DRAWING NO.:	REV. No:
21/09/2018	AS NOTED	6 OF 6	18-6169-2052-1.0	5

PROPIETARY AND CONFIDENTIAL: THE INFORMATION CONTAINED IN THIS DRAWING IS THE SOLE PROPERTY OF SHIELD INDUSTRIES. ANY REPRODUCTION IN PART OR AS A WHOLE WITHOUT THE WRITTEN PERMISSION OF SHIELD INDUSTRIES IS PROHIBITED.