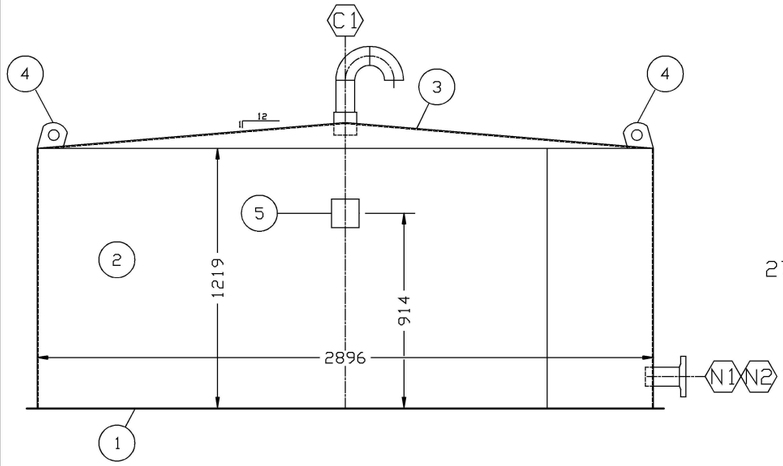

ELEVATION

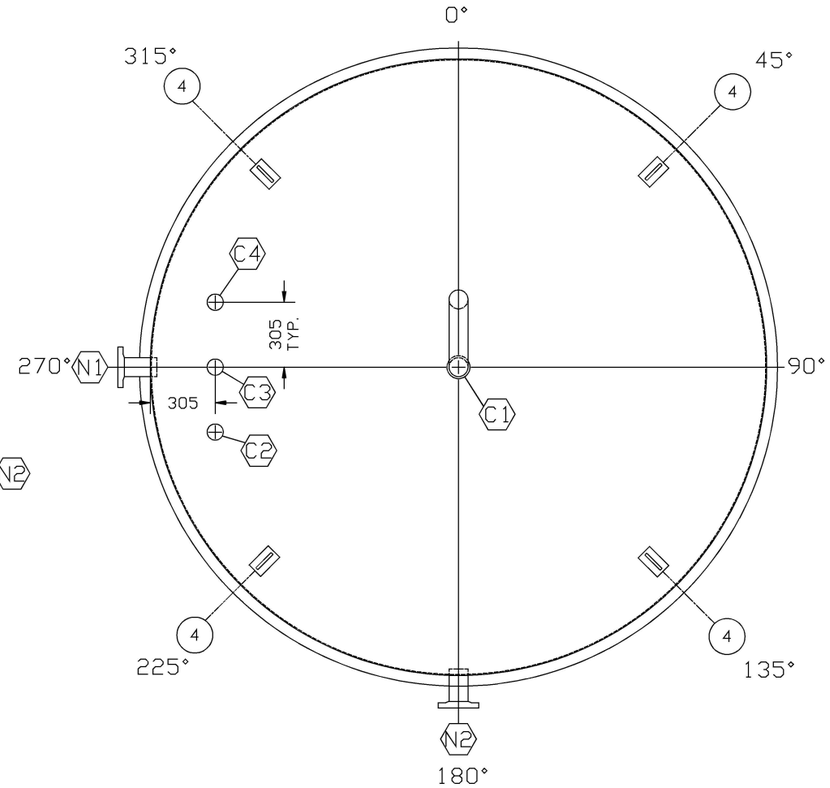

ORIENTATION

BILL OF MATERIALS:

MARK	QTY	MAT'L	DESCRIPTION	SERVICE:
1	1	A36	4.8 PL. x 2998 DIA. FLAT BOTTOM	
2	1	A36	4.8 PL. x 1219 x 9098 LG. BOTTOM SHELL	
3	1	A36	4.8 PL. x 2931 DIA. CONED ROOF	
4	4	A36	SMALL ROOF MOUNTED LIFT LUGS	
5	1		NAMEPLATE AND BRACKET	
C1	1	A105	89 DIA. (3") 3000# FULL CPLG	VENT
	1	A106	89 DIA. (3") STD. SMLS x 175 LG. PIPE (TOE)	
	2	A234	89 DIA. (3") STD. 90° LRWE c/w BIRD SCREEN	
C2	1	A105	60 DIA. (2") 3000# FULL CPLG	PUMP INLET
C3	1	A105	60 DIA. (2") 3000# FULL CPLG	VENT INLET
C4	1	A105	60 DIA. (2") 3000# FULL CPLG	SPARE
N1	1	A105	89 DIA. (3") 150# RFSO FLG.	INLET
	1	A106	89 DIA. (3") STD. SMLS x 175 LG.	
N2	1	A105	89 DIA. (3") 150# RFSO FLG.	OUTLET
	1	A106	89 DIA. (3") STD. SMLS x 175 LG.	

NOZZLES:

MARK:	PROJEC.:	ELEVATION:	NOTES:
C1	N/A	ROOF	
C2	N/A	ROOF	
C3	N/A	ROOF	
C4	N/A	ROOF	
N1	152mm	147mm	
N2	152mm	147mm	

DESIGN NOTES:

1) TANK TO BE BUILT AND TESTED TO API-12F SPEC. **MODIFIED** (NON LABELED)
2) TANK TO BE AIR/SOAP LEAK TESTED TO 1.5 PSI.
3) ROOF/SHELL JOINTS NOT TO BE BACKWELDED TO MEET API-2000 SPECS.
4) ESTIMATED SHIPPING WEIGHT = 1361 KG. (3000#)
5) REFER TO ORIENTATION DRAWING FOR PROPER LOCATION OF ALL NOZZLES, COUPLINGS, ETC.
6) ALL DIMENSIONS ARE IN mm.

INTERNAL & EXTERNAL FINISH:

1) INTERNAL FINISH
NIL

2) EXTERNAL FINISH
BLAST: SSPC-SP6 COMMERCIAL BLAST
PRIMED: 1.5-2.0 MILS CLOVERDALE RUSTEX 71024 GREY PRIMER
PAINTED: 1.5-2.0 MILS CLOVERDALE III SERIES MARINE ENAMEL F-34 (WARM GREY)

3) BOTTOM FINISH
NIL

REVISIONS:

NO.:	DESCRIPTION:	BY:	DATE:
0	ISSUED FOR FABRICATION	WE	07.16.02

CUSTOMER: BDR ENGINEERING LTD.

TITLE: ONE (1) 8 CU. M. (50 BBL)
2896 DIA. x 1219 HIGH
LUBE OIL TANK

ARGO SALES LTD

APPROVED BY:		CHECKED BY:		DRAWN BY:	BH
DATE:	11-19-99	TAG #:	–	DRAWING #:	B-6554
SHEET:	1 OF 1	REV.:	0	SERIAL #:	6554

CUSTOMER: BDR ENGINEERING LTD.

TITLE: 50 BBL LUBE OIL TANK

SCALE: N.T.S.
QUOTE #: ----