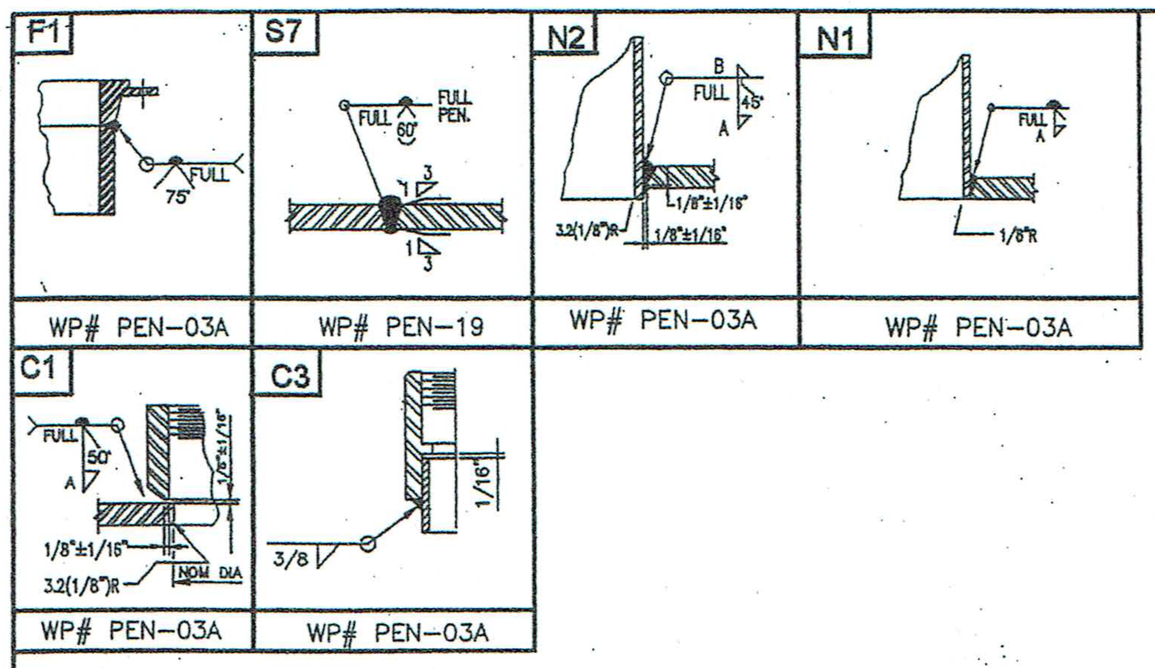

NOZZLE NO.	NO. REQ'D	SIZE
N1	1	3"
N2	1	3"
C1	1	[illegible]
C2	1	[illegible]
C3	1	2"
C4	1	2"
C5	1	2"
C6A/B	2	3/4"
C7A/B	2	3/4"
C8	1	1/2"
C9	1	3/4"
C11	1	1"
C10	1	2"
C12A/B	2	2"
SA	2	4"ø
SV	2	2"ø

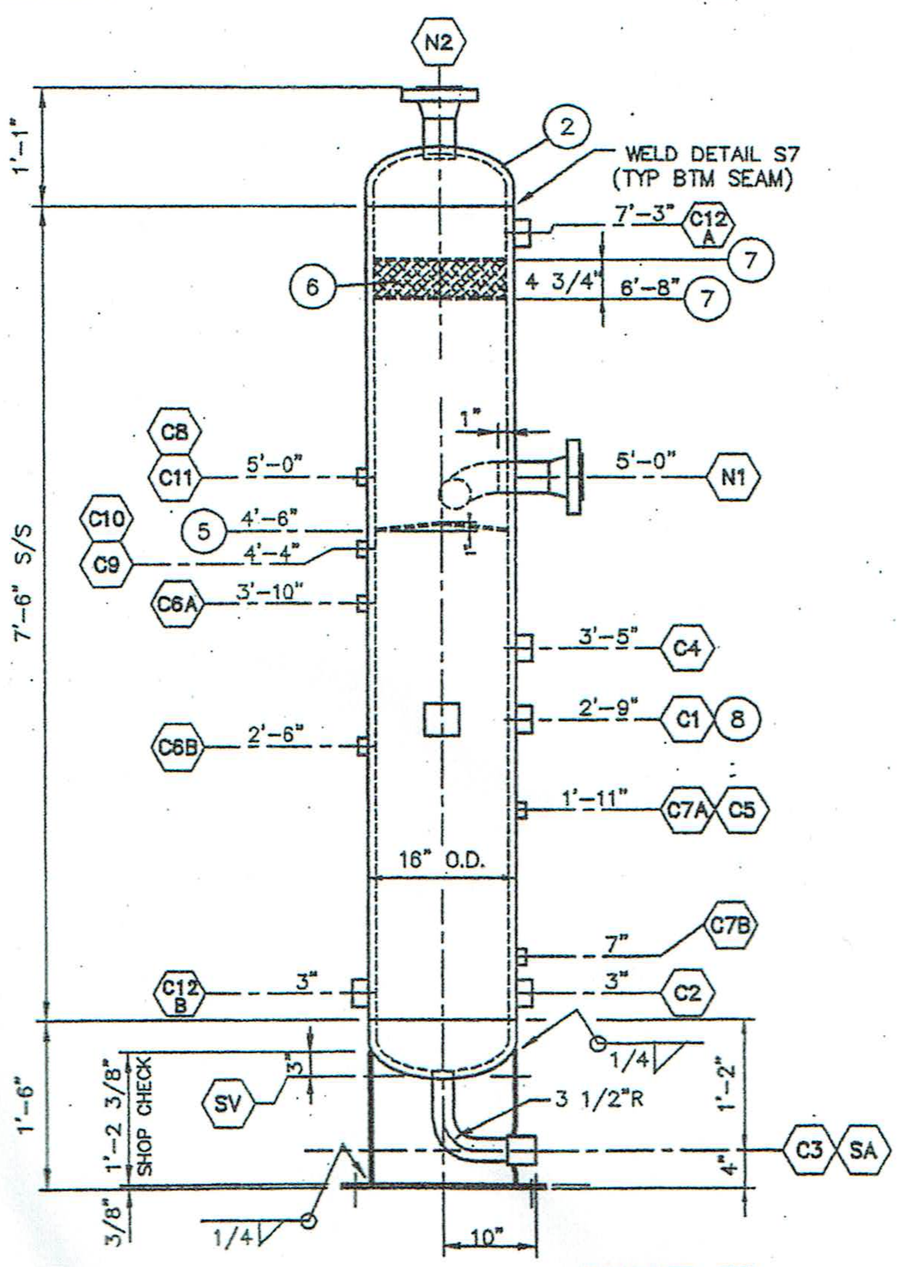

ELEVATION

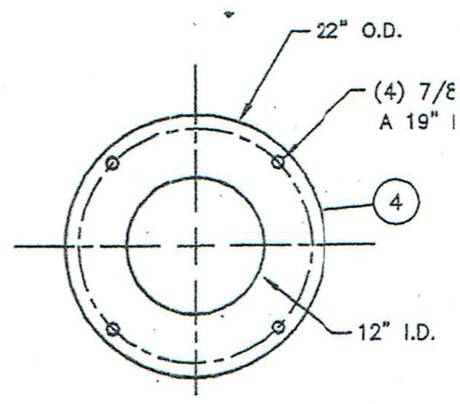

16" BASE PLATE DETAIL

REVISED TO 2005 ADDENDA
Jan 20/06 GY

DESIGN DATA

DESIGN AND FABRICATE TO A.S.M.E.CODE SECTION VIII DIV.1, 2004 EDITION
PARA: UW-11(a)5(b)

DESIGN PRESS. 1480 PSIG DESIGN TEMP. -20°/100°F STRESS RELIEF NONE
X-RAY RT-2 EFFICIENCY- SHELL JOINT 1.0 HEADS 1.0 C.A. 1/16"
SHELL THKNS NEW: .844" HEAD THKNS NEW: 0.830" (MIN)
HYDROSTATIC TEST PRESS 1924 PSIG WEIGHT EMPTY 1570 lb.
WEIGHT FULL OF WATER 2243 lbs. VOLUME 9.24 cu.ft.
MDMT -20°F @ 1480 PSIG MAWP 1480 PSIG @ 100°F

REV.	DESCRIPTION	BY	APP.	
0	ISSUED FOR FABRICATION	SPB	SPB	OCT