WESTFALIA SEPARATOR

Instruction Manual and Parts List

No. 3034-9001-000

Edition 1067

Clarifiers

Model KG 2006 - KG 10006

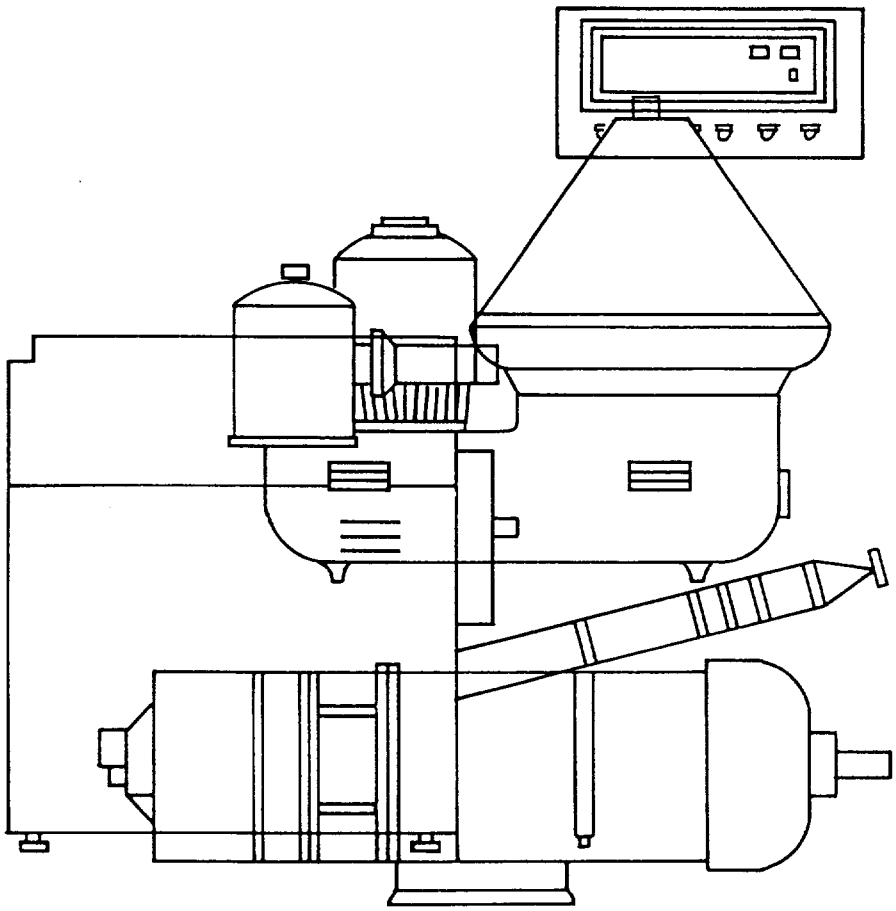

Westfalia Separator AG · Werner-Habig-Straße 1
D-59302 Oelde (F.R. Germany) · Phone (0 25 22) 77-0 · Telefax (0 25 22) 77-24 88
Telegram Address: Westfalia Oelde · Telex 8 9 474

Printed in F.R. Germany

No. 2687/1067 engl.

WESTFALIA SEPARATOR

Clarifiers

Model KG 2006 - KG 10006

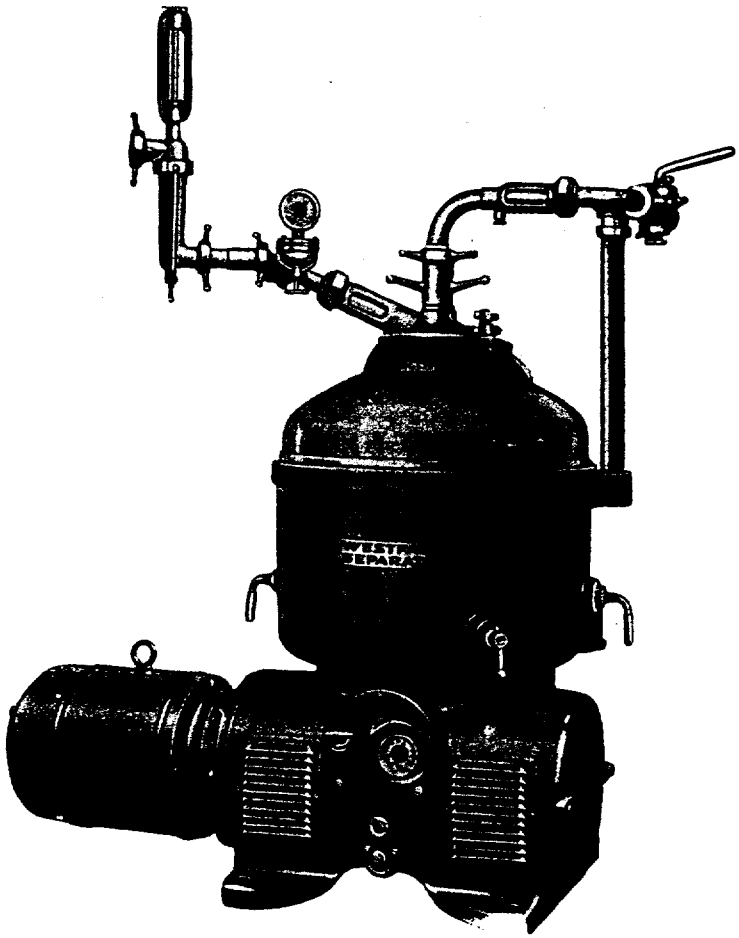

Westfalia Separator AG
D-59302 Oelde (F.R.Germany)

Type		No	
built in		inner ø of bowl mm	
Rpm. of bowl:			
Permissible density of product to be treated			
heavy liquid kg/dm³		solids kg/dm³	

OPERATING SAFETY OF THE CLARIFIER

The WESTFALIA Clarifier is a high-speed centrifuge which can be considered absolutely reliable in operation even when working under unfavourable conditions, provided that servicing and maintenance are carried out according to instructions.

The bowl speed depends on the specific gravities of the feed liquid and the separated solids. It has been rated so as to ensure the operating safety of the clarifier. If specific gravities exceed those shown on the name-plate of the clarifier, check with the factory or with authorized representatives for detailed information, since in most cases the bowl speed will have to be reduced by changing the gear parts.

It is strongly recommended that the amount of solids in the feed liquid be kept as constant as possible. Greater variations in the solids content must absolutely be avoided.

When assembling the bowl, strictly adhere to the instructions of this working manual, to avoid unbalance which may result in heavy damage.

Corrosive liquids and liquids containing abrasive solids, especially when being processed at high temperatures, may attack the bowl material after a short service time already, resulting in decreased operating safety. To avoid this danger, all bowl parts must, therefore, be checked at regular intervals. Special attention should be given to the threads of the bowl bottom and of the bowl lock ring.

We, therefore, recommend in your own interest to have your clarifier inspected by WESTFALIA specialists at regular intervals. Such inspections will contribute to maintaining operational safety of the machine, and prevent undesirable shut-downs which might be caused through lack of attention.

If bowl repair proves necessary, please advise us in time. We shall then check with you how to avoid interruption of work.

I M P O R T A N T H I N T S

1) Prior to starting the clarifier, fill bowl with water or with the product to be processed.

   NEVER START THE CLARIFIER WHEN THE BOWL IS EMPTY !

2) The bowl speed as per name-plate of the clarifier is rated for specific gravities of the liquid and the separated solids up to 1.1 kg/dm^3. In case of higher specific gravities check with WESTFALIA SEPARATOR AG. or any authorized representative for detailed information. Be sure to refer to Sect. 3.4!

3) Do NOT loosen any part of the clarifier before the bowl has come to a complete stop!

4) Never use blow-torch on bowl or expose bowl to heat of direct fire.

5) If the bowl comes up to rated speed too quickly (see Sect. 3.4) the motor will pull too high a starting current. This condition can be easily overcome by reducing the number of clutch shoes to 4 or 3 or 2.

C O N T E N T S

LIST OF PARTS

1 Safety precautions

1.1 Correct usage

The separator is designed

- in accordance with the chemical and physical properties of the product specified by the customer and
- the method of application of the separator agreed with Westfalia Separator.

In particular, products not conforming to the specifications on the maker's nameplate may not be used.

Any mode of operation deviating herefrom is not proper and correct.

Prior to any intended deviation from the agreed operating mode, it is therefore imperative to obtain the consent of Westfalia Separator.

1.2 Safety stickers on the machine

The following warnings must be attached to the machine as self-adhesive stickers.

The stickers must always be in perfect condition.

- Clean dirty stickers.
- Replace damaged stickers.

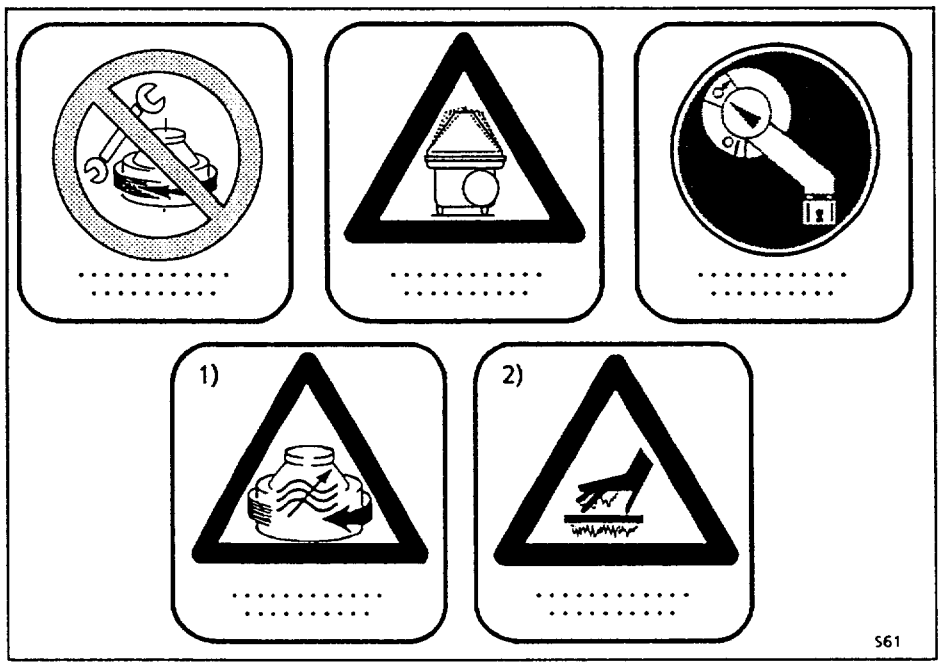

Fig. 1 *1) Only in case of operation with frequency converter*
2) Only in case of hot operation

1.3 Basic operating principles

Separators are used for the separation of liquid mixtures or for the separation of solids out of liquids or liquid mixtures.

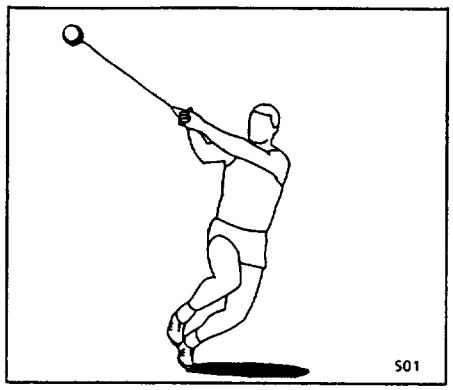

Fig. 2

High centrifugal forces are produced in the rotating bowl.

Under the influence of the centrifugal forces, separation of the liquid mixture and/or ejection of the solids particles takes place most rapidly.

The specifically heavier components are displaced to the bowl periphery, whereas the specifically lighter components are displaced towards the centre of the bowl.

The high centrifugal force is produced by very high bowl speeds. On the one hand, high bowl speeds signify high efficiency, while on the other hand, they signify high material stressing of the separator.

1.4 Bowl speed and product

The bowl speed is an important parameter when rating the separator. It depends on the chemical and physical properties of the product such as

- temperature (if higher than 100°C or lower than 0°C),
- density of the fluid and solid components
- aggressiveness of the product as regards corrosion and erosion (has influence on the selection of the bowl material)

The bowl speed is determined on the basis of these parameters allowing for an adequate safety margin.

If one of these parameters should change during operation, it is imperative to contact Westfalia Separator AG.

1.5 Operations on the separator

The separator works reliably, provided that it is operated and looked after in accordance with our operating Instructions.

Special attention must be given to:

- assembly
- starting
- shutting-down
- maintenance and servicing

1.5.1 Assembly

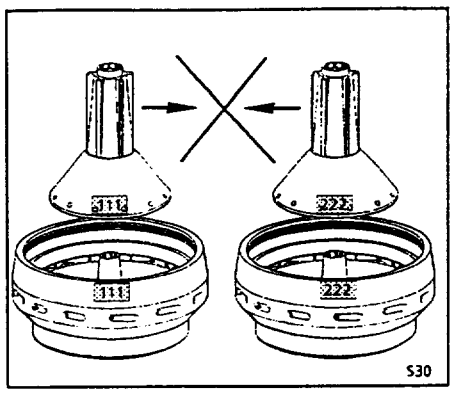

Fig. 3

- If the plant has several centrifuges, be careful not to interchange parts of different bowls since each bowl has been balanced individually.

  The bowl parts are marked with the serial-number of the machine or with the last three digits of the serial-number.

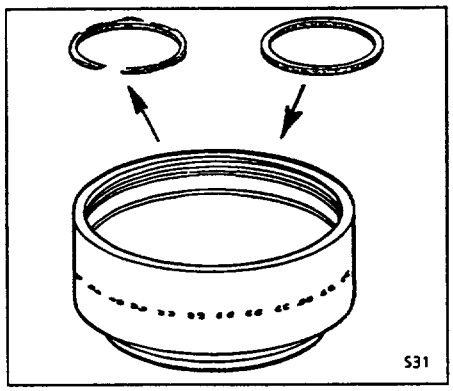

Fig. 4

- Damaged parts must be replaced immediately by practically new ones.

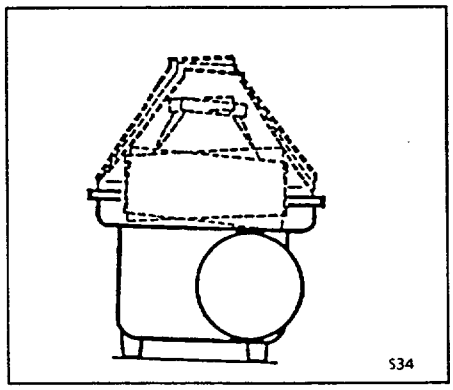

Fig. 5

- After installing spare bowl parts, the bowl must be re-balanced.

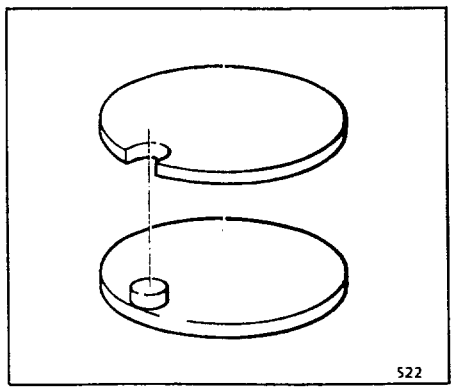

Fig. 6

- The bowl parts are arranged in fixed positions relative to one another.
- Locking devices and alignment marks must be in perfect condition.

  The bowl must not be operated if these locking devices and alignment marks are not in perfect condition.

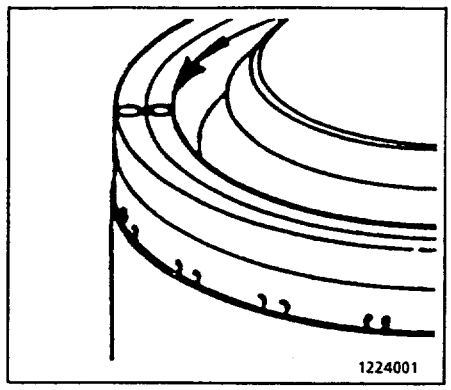

Fig. 7

- When assembling the bowl, be sure to strictly adhere to the instructions given in chapter 2.4.2, in order to avoid undue unbalance.
- Before starting the bowl, be sure to fit all parts.
- Tighten the bowl lock ring securely: the O marks on the bowl bottom or bowl top and on the lock ring must be in line with each other.

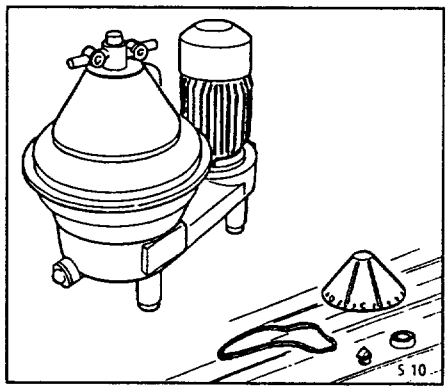

Fig. 8

- Check if the machine is completely assembled and properly installed.

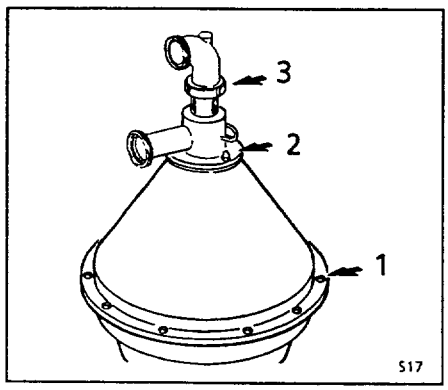

Fig. 9

- Carefully fasten hood 1, feed and discharge housing 2 and centripetal pump 3.

1.5.2 Electrical appliances

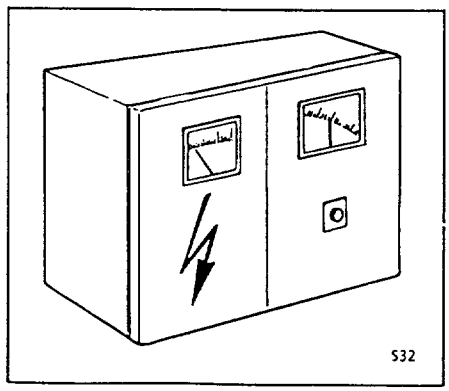

Fig. 10

- The governing accident prevention regulations apply for the electrical appliances and installations.
- The frequency and voltage of the power supply must correspond to the machine specifications.
- Carry out potential equalization.

1.5.3 Before start-up

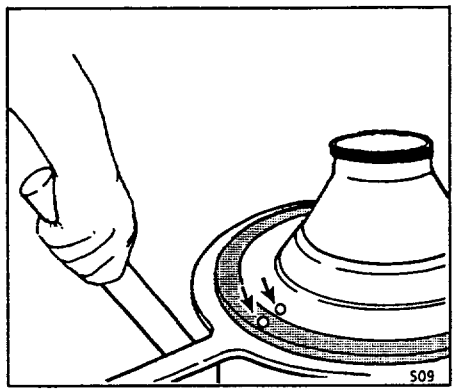

Fig. 11

- Check that the bowl lock ring has been firmly tightened.
- The "O" marks on bowl bottom or bowl top and on the lock ring must be aligned.

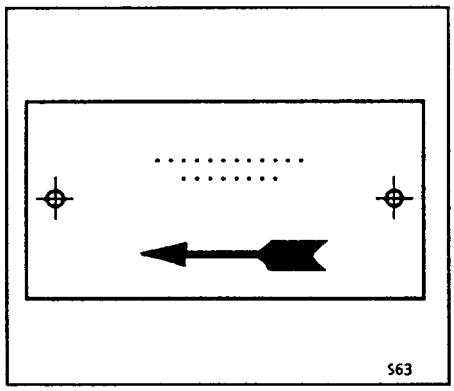

Fig. 12

- The bowl must rotate in clockwise direction (see arrow on frame or solids collector).

Fig. 13

- The separator may only be operated with protection devices conforming to EN 294.
  - Equip solid and liquid discharges accordingly.

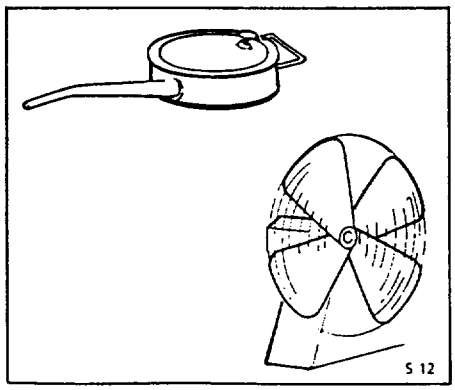

Fig. 14

- Check that the lubrication and cooling systems are serviceable.

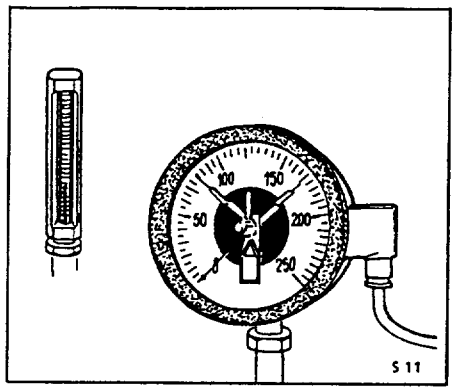

Fig. 15

- Check whether the supervisory equipment is operational and the correct limit values are adjusted.
- When hoods, concentrate collectors and vessels are pressurized, e.g. by
  - inert gas,
  - cooling,
  - steam sterilization etc.

  the pressures stated on the name-plate must not be exceeded.

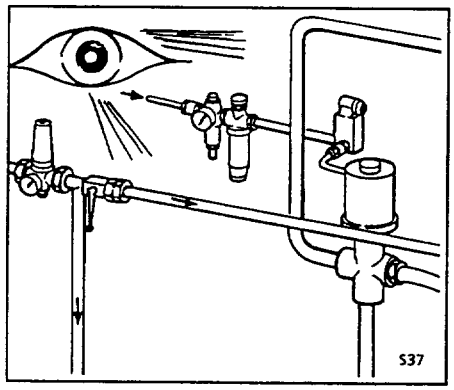

Fig. 16

- Check that the paths are set to product.
- Regularly check hoses for signs of ageing.
- Check sight glasses for mechanical damage.
- Replace damaged parts by parts which are as good as new.

1.5.4 Putting into operation

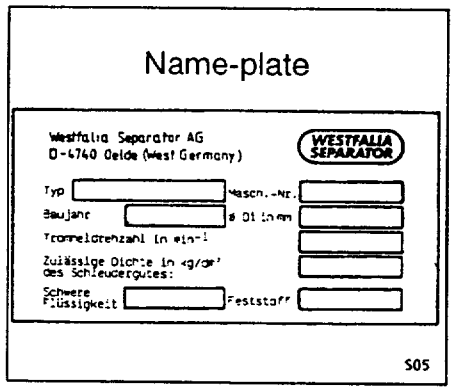

Fig. 17

- Refer to chapter 2.3.
- Refer to the maker's nameplate. The values for
  - bowl speed,
  - density of the heavy liquid,
  - density of the solids (centrifugally dry)

  are maximum values and must not be exceeded.

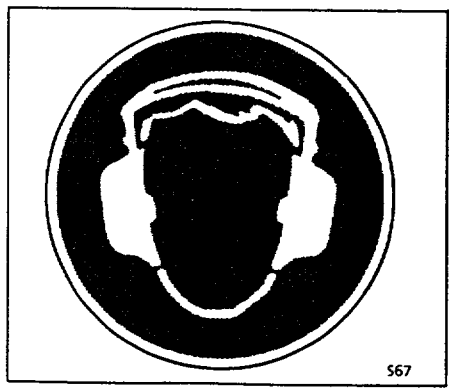

Fig. 18

- Wear ear protection.

Fig. 19

In case of frequncy converter operation:

- Do not under any circumstances manipulate the frequency converter to exceed the permissible bowl speed(see maker's nameplate).
- The separator may only be operated with an independent device for speed limiting.

Fig. 20

- Do not feed product which is subjected to explosion protection regulations.
- The separator must not be used in areas where explosion protection is required.

Fig. 21

- In case of operation with products harmful to persons, the corresponding safety regulations must be observed.
- Refer to the safety data sheet of the product.
- Wear protective clothing.

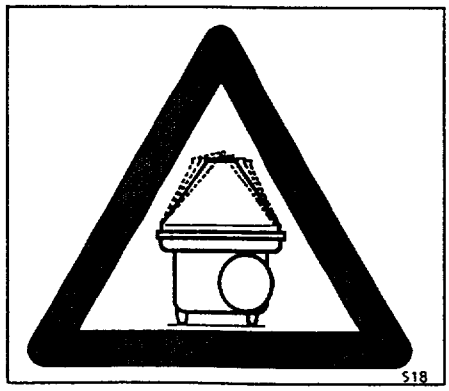

Fig. 22

- Stop the separator immediately if unusual noises or vibrations occur.

Fig. 23

Only in case of hot operation:

- Product-contacting parts such as
  - pipes and hoses,
  - hood,
  - solids collector reach temperatures over 80 °C.

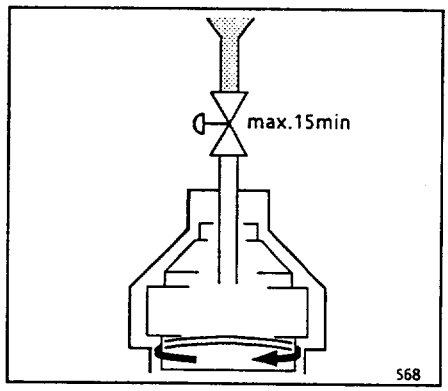

Fig. 24

- The bowl must not run for longer than 15 minutes without liquid supply as otherwise overheating of the bowl material may occur.

1.5.5 Shut-down and "Emergency-Off"

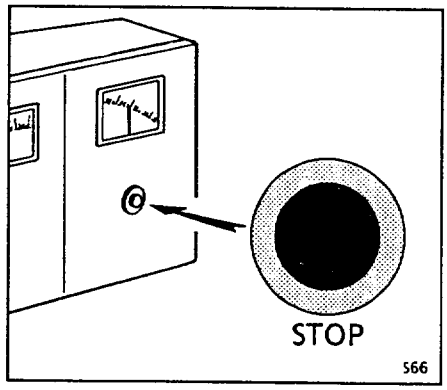

Fig. 25

- For shut-down refer to the chapter 2.3.4.

1.5.6 Maintenance and repair

Unfavourable operating conditions may require shorter maintenance intervals. The factors listed below are unfavourable because they either attack the material of the separator directly or have a negative effect on lubrication/cooling.

- aggressive product (chemical or physical)
- high product temperature
- product with grease decaying properties
- environment: temperature, dust and vapours

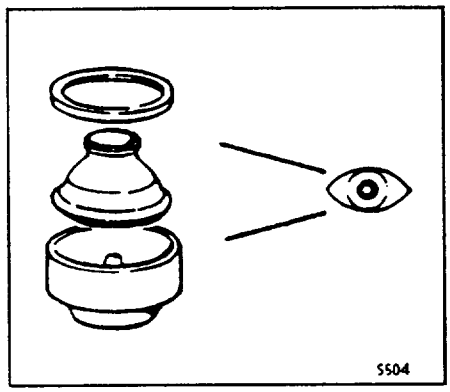

Fig. 26

Particularly stressed parts such as bowl lock ring, bowl bottom, bowl top and other bowl parts with a large diameter must be checked on a regular basis to ensure safe and efficient operation.

Timely maintenance and replacement of worn or damaged machine parts is essential for safe operation of the machine.

Maintenance and repair work may only be carried out by the customer to the extent as described in this instruction manual.

Maintenance and repair work not described in this manual may only be carried out by the manufacturer or by "repair shops" authorized by the manufacturer.

We, therefore, recommend in your own interest to have your separator inspected by our service engineers at regular intervals. Such inspections will keep your separator working reliably and prevent undesirable shut-downs.

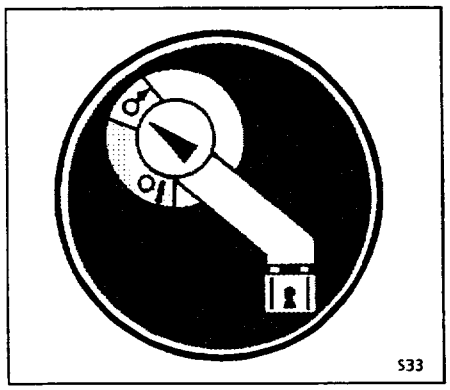

Fig. 27

Before maintenance and servicing:

- switch off all electrical appliances via the main switch,
- secure installation against unintended re-starting with locking devices.

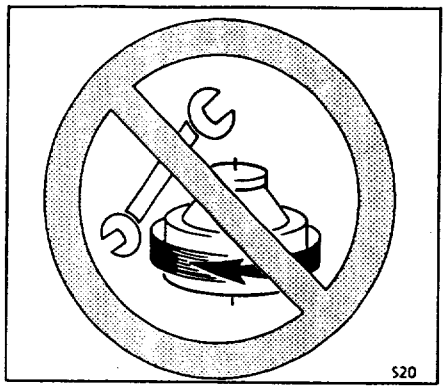

Fig. 28

Do not loosen any part before the bowl has come to a standstill.

For checking standstill refer to chapter 2.3.4.

Fig. 29

- Do not climb onto or stand on the machine or parts of the machine.
- Use a sturdy working platform.

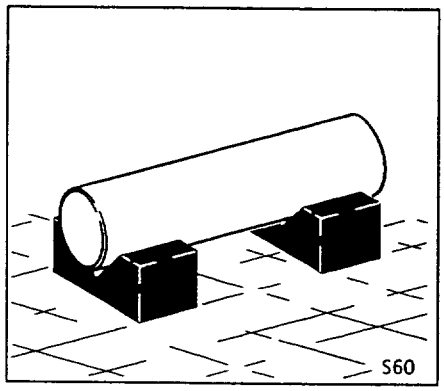

Fig. 30

- Place dismantled machine parts on a suitable base, e.g. rubber mat.
- Take steps to prevent machine parts from overturning.

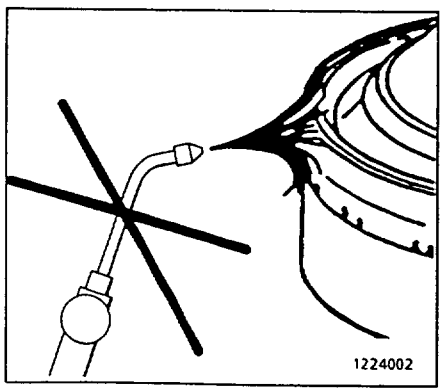

Fig. 31

Do not heat bowl parts with the naked flame.

Bowl parts must never be welded. This also applies for hood and solids collector parts of steam-sterilizable separators.

Even during cleaning the bowl parts the temperature must not exceed 100 °C.

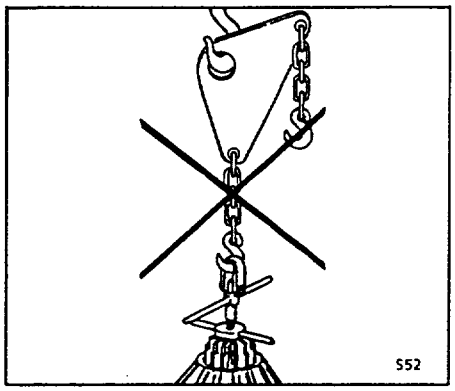

Fig. 32

- Load carrying equipment such as
  - lifting devices for bowl or distributor,
  - chains etc.

  may only be used for work routines as described in this instruction manual.
- Do not use damaged or incomplete load carrying equipment.

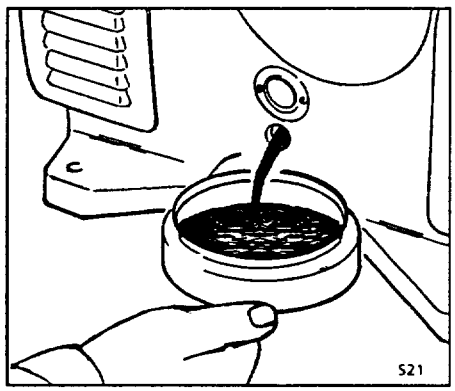

Fig. 33

Collect dripping oil to prevent danger of slipping or product infection.

When handling waste oils note:

- They can be injurious to health, depending on their chemical composition.
- Waste oil must be disposed of in accordance with local regulations.

1.6 Corrosion

Corrosion can also affect bowl parts made of stainless steel. This corrosion can be flat-spread or pit- or crack-shaped and merits special attention.

Corrosion on stainless steel bowl material should be examined thoroughly and documented.

Flat-spread corrosion can usually be measured (reduction of wall thickness)

Pit- or crack-shaped corrosion cannot be measured without the risk of damage. At the initial stage pit-shaped corrosion is generally caused by chlorine ions.

Depending on the stressing of the part, pit-shaped corrosion can result in crack-shaped corrosion.

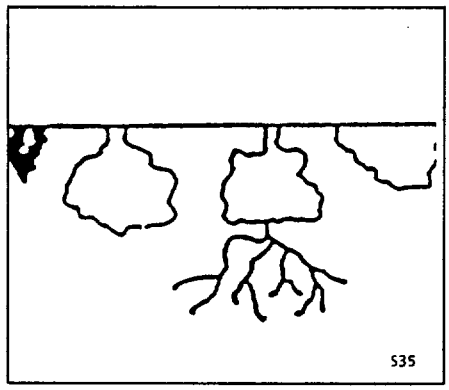

Fig. 34

Possible formation of pit-shaped corrosion

Such pittings can only be investigated by a materials expert.

In case of crack-shaped corrosion attack with or without superposed flat-spread and pit-shaped corrosion on main bowl components, the machine must be shut down immediately.

Contact your nearest Westfalia Separator representative for a thorough examination.

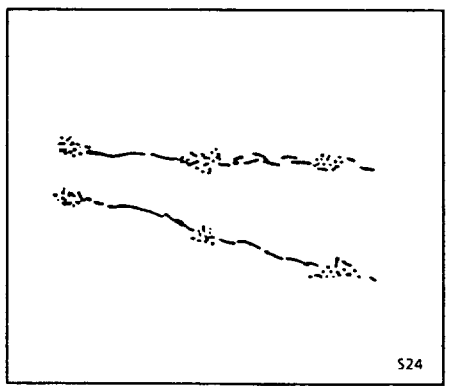

Fig. 35

Pittings

Pittings which are close together or form a linear pattern can signify crack formation beneath the surface.

Such pittings should be investigated by a materials expert.

1.7 Erosion

Erosion is caused by solid particles in the process liquid.

These solid particles grind marks into the surfaces with which they come into contact.

The following factors favour the occurence of erosion:

- hard solids particles
- high throughput capacities

The first signs of erosion should be carefully observed and documented. Erosion can deepen rapidly, thereby weakening the bowl material.

Contact your nearest Westfalia Separator representative for a thorough examination. Information on the nature of the damage can be provided by photos, plaster casts or lead molds.

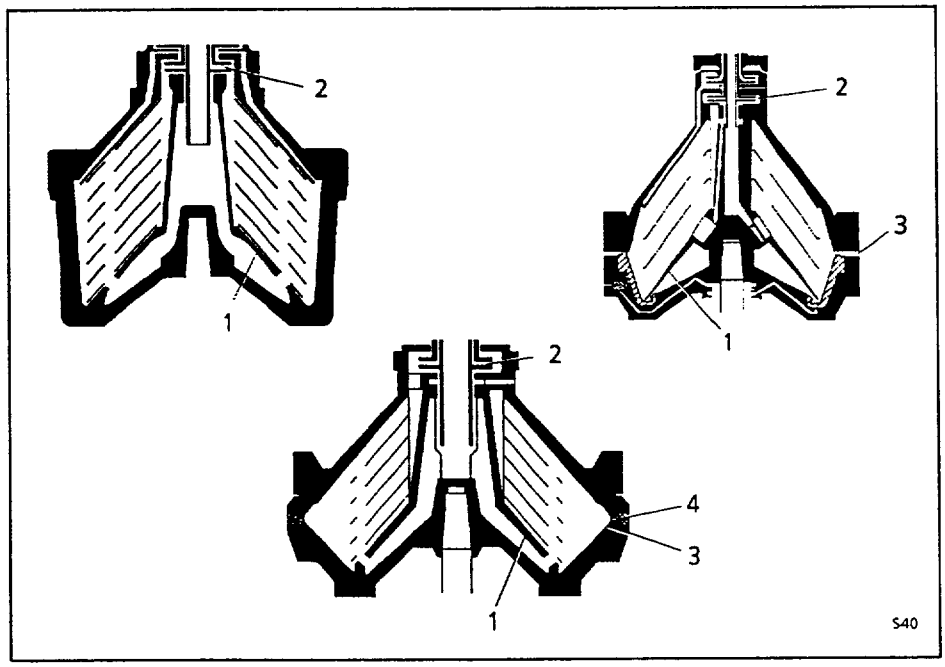

Fig. 36

The surfaces most susceptible to erosion are:

1) the bottom of the distributor, the rising channels and the ribs.

2) the centripetal pump (Cavitation)

3) all surfaces in the area of the solids discharge ports

4) the nozzles

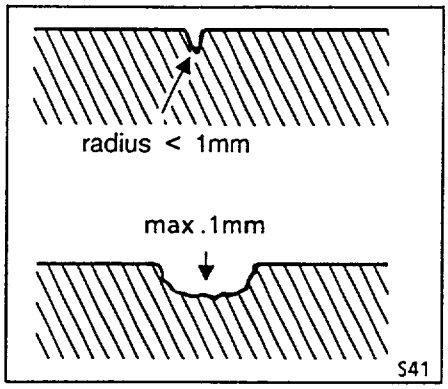

Fig. 37

Signs of erosion which you should immediately report to your nearest Westfalia Separator representative:

- The bottom of the erosion mark has a radius smaller than 1 mm (large notch effect).
- The depth of erosion mark exceeds 1 mm at the deepest point.

W O R K I N G I N S T R U C T I O N S

1. INSTALLATION

When installing the clarifier, make sure that sufficient room is available to lift off the hood, to mount and remove the motor, as well as to remove the horizontal drive shaft which is pulled out on the off-motor side of the frame.

The foundation frame should be installed in the floor or, if not feasible, on the floor, i.e. on a concrete or brickwork base, in such a way that the four raised blocks on the frame protrude from the floor or from the surface of the base. See fig. 12, 13. Make sure that the surfaces of the raised blocks are absolutely level. Fill everything with cement and let dry. To accelerate setting of cement, commercial rapid binding agents may be used.

To avoid damage to bearings, make sure that the foundation of the clarifier has no contact with foundations of other units (e.g. auxiliary Diesel engine, or pumps). Fig. 8 shows how the separator is fastened on the foundation frame.

A trolley with chain hoist block should be installed over the clarifier.

2. LUBRICATION

All bearings and gears of the separator are splash lubricated from a central oil bath.

Before starting the separator the first time, fill gear chamber with oil through the opening for the oil fill plug until oil level is slightly above centre of sight glass 14. The oil level must never be below the centre of the sight glass.

Make first oil change after about 200 working hours. Subsequently, make complete oil change when conditions require, i.e. as a rule, every 1000 working hours.

When making oil change, flush gear chamber thoroughly with thin-bodied oil to clean out bronze particles.

For lubrication, use only well refined mineral oils of the following viscosity ranges at 50°C:

- 8-10 E = 60,5 - 76 cSt ('SAE 30) for sep. temperatures up to 80°C.
- 10-12 E = 76- 91 cSt (SAE 40) for sep. temperatures higher than 80°C
- Viscosity index: minimum 85

Bear in mind that the viscosity group SAE 30 (SAE = Society of Automotive Engineers) comprises the viscosity range from 6,5 to 10E at 50°C. Select lubricating oils for KG type separators only from the before-mentioned viscosity range (8-10E at 50°C).

EP-Oils (with high pressure additives) may only be used if they have no corrosive effect.

To replace the sight glass, use wrench 329.

3. MOTOR CONNECTION

3.1 Three Phase AC Motor

According to local conditions, the three phase AC motor can be connected as shown in wiring diagrams a, b, or c of Fig. 1.

Every three phase AC motor can be connected to power lines with two different voltages. If e.g., the motor is marked for 220/380 volts, it can be connected across the line to 380 volts as per wiring diagram a, or to 220 volts as per wiring diagram b.

If for a special reason, a motor is marked for 220 volts in delta connection (which is the same as 220/380 volts), it can of course also be connected to 380 volts as per wiring diagram a (in star connection).

If start is effected by means of a star-delta switch, the motor can only be connected to the delta voltage as per wiring diagram c. If the motor is e.g., marked for 220/380 volts, connection can consequently only be made to 220 volts. Switching from star to delta will have to be done after 4 to 6 seconds.
In case an overload release, adjusted to the rated current of the motor is installed, it must be jumped during starting time because of the increased starting current. The starting current can reach 1.5 to 1.8 times the value of the rated current. This should also be considered when selecting the size of the lead-in wires, and when fusing the lead-in wires.

Wiring Diagrams for Three Phase AC Motors

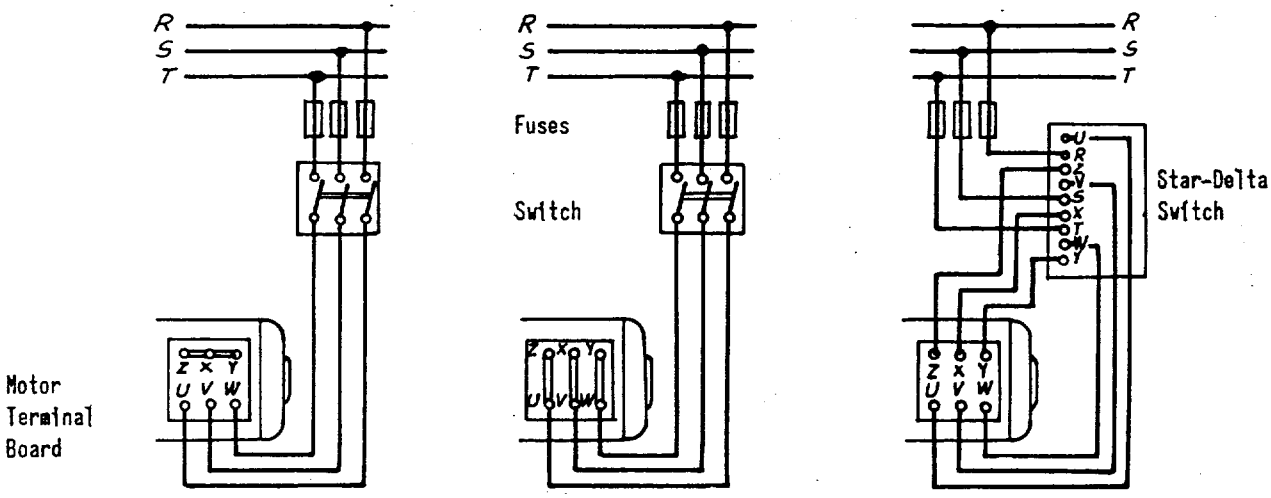

a
Motor in star connection
(for higher tension)

b
Motor in delta connection
(for lower tension)

c
Start with star-delta switch
(for lower tension only)

To convert direction of rotation, interchange two lead-in wires:

For Figs. a and b
(on motor terminal board): U with V
or V with W
or W with U

For Fig. c
(in star-delta switch): R with S
or S with T
or T with R

Fig. 1

3.2 Special Torque-controlled Motor for Direct, Clutchless Drive (for KG 10 006 only)

The KG 10 006 separator is also available for direct clutchless drive by means of a special torque-controlled three phase AC motor, specially designed to suit conditions both during start-up and operation. This motor is laid out for switching across the line and long-time starting. Its winding corresponds to the requirements of class H within the classification of insulating materials according to specifications VDE 0530.

The motor is connected according to wiring diagram a or b of Fig. 1.

When selecting switching apparata, fuses and lead-in wires, the starting current (and NOT the rated current) should be taken into account. It amounts to about 3 times the value of the rated current.

To protect the motor against overload and single phase run during operation, use a long-time start control for across-the-line starting. By means of this control, the release, set for the rated current of the motor, is jumped during start-up.

3.3 Direction of Rotation of Separator Bowl

The bowl must turn clockwise, when looked at from above. If the bowl rotates counter-clockwise (incorrect), the direction of rotation is reversed by interchanging two terminal leads, as shown in Fig. 1.

3.4 Speed and Start-up Time of Bowl

To ensure the normal safety of the separator, the bowl speed has been rated in relation to the specific gravity of the liquid and the separated solid phase.

For specific gravities of up to 1.1 kg/dm^3, the bowl speed figures are indicated on page 54 and 55.

For higher specific gravities than 1.1 kg/dm^3, gears must be changed to reduce the bowl speed. In this case, make sure to check with the factory. Gears for 1430 and 1720 rpm of motor are available.

Variations of speed up to 3% are admissible.

The gear parts marked with *** in the Parts List are valid only for the bowl speed figures as stated on page 54 and 55. When ordering spares, bear in mind that the Part-Nos. for these parts as stated in the list, are no longer valid if the separator was equipped, on delivery, with gear parts for a lower bowl speed, or if the bowl speed has been reduced subsequently by changing the gear parts. In this case, state the number shown on the part to be replaced and be sure to mention Model and Serial No. of the separator concerned.

The bowl speed is indicated by tachometer 16. To exchange the tachometer, merely unscrew by hand.

The start-up times of the bowls are as follows:

For	KG 2006	:	3 - 4 minutes
"	KG 4006	:	4 - 5 "
"	KG 8006	:	6 - 7 "
"	KG 9006	:	8 - 10 "
"	KG 10006	:	12 - 15 "

Make certain that the bowl comes up to its rated speed (as per name-plate of separator) within its starting time and that this speed is maintained during operation (see Sect. 14.1 to 14.3).

4. BOWL, AND FEED AND DISCHARGE CONNECTIONS

4.1 General

The KG type separator can be furnished with a six-chamber bowl or a two--chamber bowl, depending on the solids content of the product to be processed and the desired clarifying efficiency.

The separator is available with open or enclosed feed material inlet. If the inlet is of enclosed type, the feed line may be furnished with one or two connections.

4.2 Assembling the Six-Chamber Bowl (Fig.2a)

1) Carefully de-grease cone of spindle 152f (164f) and of lower bowl part 251, and wipe dry.
2) By means of lifting device 303 place lower bowl part on spindle.
3) Turn bowl locking screws 8 slightly into recesses of lower bowl part.
4) Fasten spindle nut 258 tightly:

KG 2006 KG 4006 KG 8006	left-hand thread	KG 9006 KG 10006	right-hand thread

5) Use lifting device 301 to place wing insert 252 into lower bowl part. Make sure locating pin fits into recess of lower bowl part.
6) Install cylindrical insert I, item 253, by means of tool 309. Make sure locating pins in bottom of wing insert fit into corresponding recesses of cylindrical insert.
7) Install cylindrical insert II, item 254. Watch for alignment!
8) Install cylindrical insert III, item 255. Watch for alignment!
9) Install cylindrical insert IV, item 256. Watch for alignment!
10) Install bell-shaped insert 257 by means of lifting device 301. Watch for alignment!
11) Place gasket 260 into groove of upper bowl part 261 and install upper bowl part by means of lifting tongs 326 (for KG 2006), or by means of wrench 305 (for KG 4006, KG 8006, KG 9006, and KG 10006). Watch for alignment!
12) Put thin film of graphite paste or Molykote paste on inner surface of bowl locking ring 259. Then screw bowl locking ring on by hand in counter-clockwise direction, and tighten it by rapping handle of wrench 317 smartly with a mallet until "0" marks on ring and on upper bowl part are in line. DO NOT SLIP A PIPE OVER WRENCH HANDLE TO OBTAIN LEVERAGE !
13) Place centripetal pump assembly 24 on neck of upper bowl part.
14) Insert gasket 262 in groove of pump chamber cover 264, and put on pump chamber cover.
15) Screw on lock ring 263 by hand and tighten with wrench 318 (left--hand thread).
16) Turn bowl locking screws 8 back. Make sure bowl can be turned by hand.

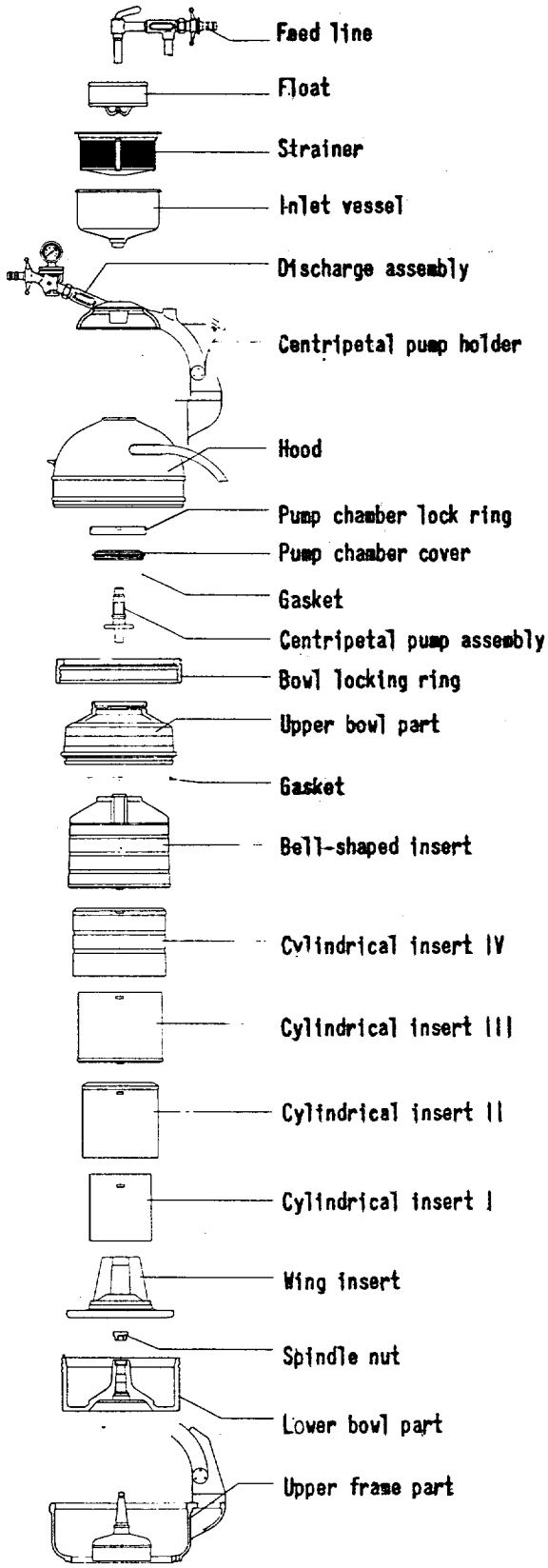

Fig. 2a

Component Parts of Six-Chamber Bowl and of Feed and Discharge Connections (Open Feed) in the Order of Assembly.

4.3 Assembling the Two-Chamber Bowl (Fig.2b)

1) Carefully de-grease cone of spindle 152f (164f) and of lower bowl part 271, and wipe dry.

2) By means of lifting device 303 place lower bowl part on spindle.

3) Turn bowl locking screws 8 slightly into recesses of lower bowl part.

4) Fasten spindle nut 273 tightly:

KG 2006 KG 4006 KG 8006	left-hand thread	KG 9006 KG 10006	right-hand thread

5) Use lifting device 301 to place wing insert 272 into lower bowl part. Make sure locating pin fits into recess of lower bowl part.

6) Install bell-shaped insert 274 by means of lifting device 301. Watch for alignment!

7) Place gasket 276 into groove of upper bowl part 277 and install upper bowl part with lifting tongs 326 (for KG 2006) or with wrench 305 (for KG 4006, KG 8006, KG 9006, and KG 10006). Watch for alignment!

8) Put thin film of graphite paste or Molykote paste on inner surface of bowl locking ring 275. Then screw locking ring on by hand in counter-clockwise direction, and tighten it by rapping handle of wrench 317 smartly with a mallet until "0" marks on ring and on upper bowl part are in line. DO NOT SLIP A PIPE OVER WRENCH HANDLE TO OBTAIN LEVERAGE !

9) Place centripetal pump assembly 24 on neck of upper bowl part 277.

10) Insert gasket 278 in groove of pump chamber cover 280 and put on pump chamber cover.

11) Screw on lock ring 279 by hand and tighten with wrench 318 (left--hand thread).

12) Turn bowl locking screws 8 back. Make sure bowl can be turned by hand.

4.4 Installing the Hood - Assembling the Feed and Discharge Connections (Open Feed, Fig.2a)

1) Place hood assembly 23 on separator frame.

2) Hinge down centripetal pump holder assembly 9g-n and fasten with hinge screw assembly 10a-d.

3) Place discharge assembly 36a-p on centripetal pump holder.

4) Fasten discharge assembly with locking levers 91 and handle nuts 9m (for KG 2006: with locking levers only).

5) Screw inlet vessel 34 on to centripetal pump 24, while holding centripetal pump with wrench 306 supplied for this purpose.

6) Check for proper clearance on top and bottom of centripetal pump in pump chamber. To do this, loosen locking levers 9 1 and raise discharge assembly 36a-p with centripetal pump. Centripetal pump has proper clearance if discharge assembly of Separator KG 2006 and KG 4006 can be raised by 3 mm (1/8"), and discharge assembly of Separator KG 8006, KG 9006, and KG 10006 by 4-6 mm (5/32" - 15/64"). Then fasten discharge assembly and insert reducing tube.

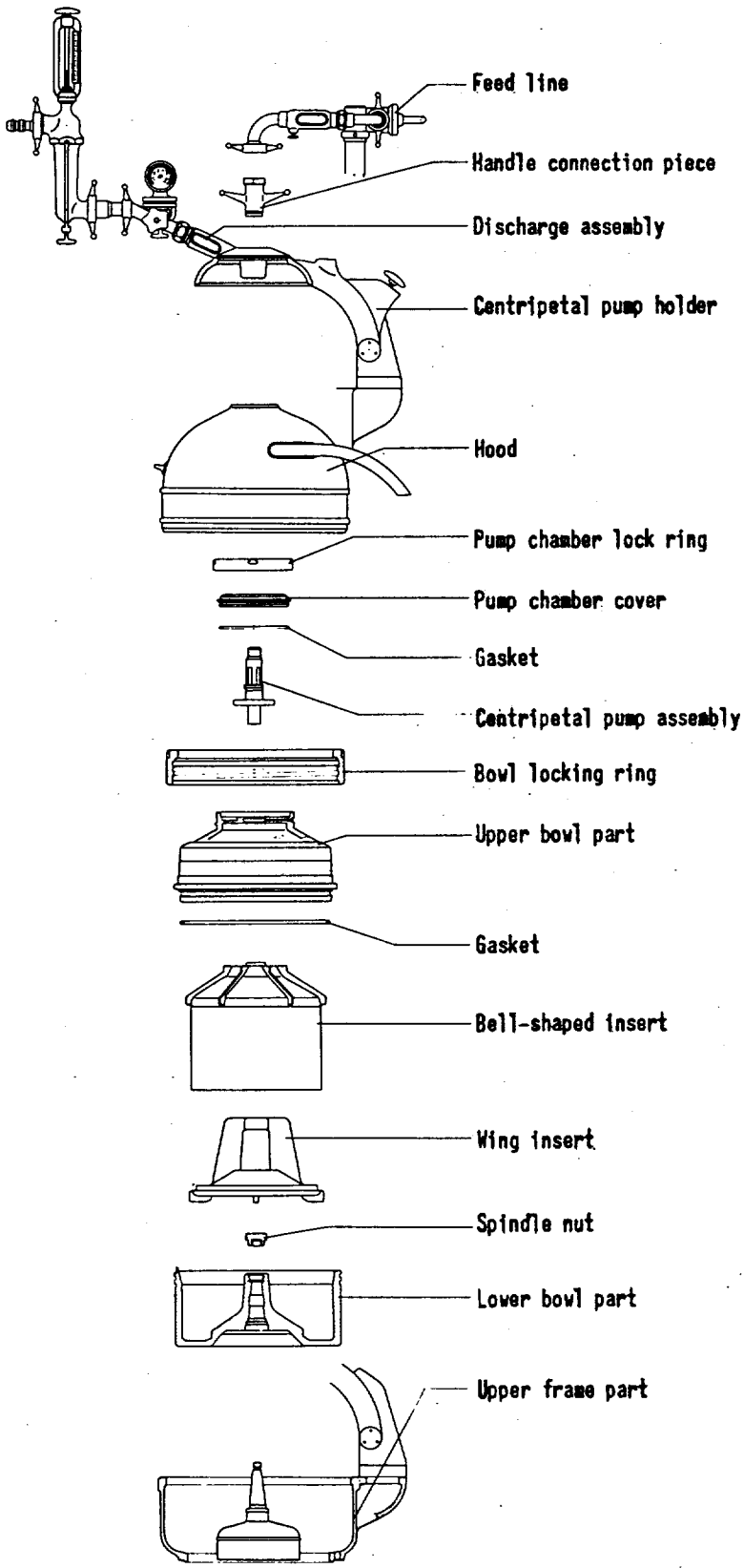

Fig. 2b
Component Parts of Two-Chamber Bowl and of Feed and Discharge Connections (Enclosed Feed) in the Order of Assembly.

7) Place strainer 33 and float 32 into inlet vessel.

8) Insert assembled feed line 30a-s in opening of centripetal pump holder 9g and fasten with screw (see Fig.4 also).

4.5 Installing the Hood - Assembling the Feed and Discharge Connections (Enclosed Feed, Fig.2b)

1) Place hood assembly 23 on separator frame.

2) Hinge down centripetal pump holder assembly 9g-n and fasten with hinge screw assembly 10a-d.

3) Place discharge assembly 54a-p on centripetal pump holder.

4) Fasten discharge assembly with locking levers 9 1 and handle nuts 9m (on KG 2006: with locking levers only).

5) Choose reducing tube 45 for desired throughput capacity and insert it in centripetal pump 24.

6) Screw handle connection piece 47 onto centripetal pump, while holding centripetal pump with wrench 306.

7) Check for proper clearance on top and bottom of centripetal pump in pump chamber. To do this, open locking levers 9 1 and raise discharge assembly 54a-p together with centripetal pump. If discharge assembly of KG 2006 and KG 4006 can be raised by 3 mm (1/8"), and discharge assembly of KG 8006, KG 9006 and KG 10006 by 4-6 mm (5/32"-15/64"), the centripetal pump has the proper clearance.
Then fasten discharge assembly.

8) Connect assembled feed line 49a-y which is fastened to support 46, with handle connection piece 47 by means of handle nut 49n. With the aid of adjusting sleeve 49x, align connection of feed line with center of separator. Then tighten screw 49w. Screw on the socket, either item 51, or 52, or 53 (see Fig. 5 also).

9) Screw intermediate piece assembly 57a-f and flowmeter 58a-x as well as the proper discharge socket piece 59 or 61 or 62 (see Fig.5) on to discharge assembly 54a-p.

4.6 Disassembling the Feed and Discharge Connections (Open Feed) and the Six-Chamber Bowl or Two-Chamber Bowl

1) Stop the separator (see Sect. 7).

2) Loosen screw of bracket 9a and remove feed line assembly 30a-s with support 30n.

3) Remove float 32 and strainer 33. To remove reducing tube, use tool 315.

4) Screw off inlet vessel 34, while holding centripetal pump 24 with wrench 306.

5) Loosen locking levers 9 1 and remove discharge assembly 36a-p.

6) Open hinge screw and hinge up centripetal pump holder 9g-n.

7) Remove hood assembly 23.

8) Turn bowl locking screws slightly into recesses of lower bowl part 251 (271).

9) Unscrew centripetal pump chamber lock ring 263 (279), using wrench 318 (left-hand thread).

10) Remove pump chamber cover 264 (280) and centripetal pump 24.

11) Loosen bowl locking ring 259 (275) with annular wrench 317; then remove it by hand.

12) Remove upper bowl part 261 (277) by means of lifting tongs 326 and wrench 305 resp..

13) Use lifting device 304 to remove bell-shaped insert 257 (274).

14) Remove cylindrical inserts by means of tool 309.

15) Push off wing insert 252 (272) by means of tool 304. Then pull it out of lower bowl part.

16) Loosen spindle nut 258 (273):

On KG 2006 on KG 4006 on KG 8006	left-hand thread	on KG 9006 on KG 10006	right-hand thread

17) Push lower bowl part 251 (271) off with lifting device 303. Lower bowl part of Separator KG 9006 and KG 10006 should be emptied previously with siphon 311.

18) Turn bowl locking screws 8 back and remove lower bowl part.

4.7 Disassembling the Feed and Discharge Connections (Enclosed Feed) and the Six-Chamber-Bowl or Two-Chamber-Bowl

1) Stop the separator (see Sect. 7).

2) Unscrew handle nuts 49n and 49g. Remove feed line.

3) Screw off handle connection piece 47 while holding centripetal pump 24 with wrench 306. Then remove reducing tube 45 by means of tool 315.

4) Loosen handle nuts 9m and locking levers 9 1 (on KG 2006: locking levers only), and screw off handle nut 57b.

5) Remove discharge assembly 54a-p.

6-18) See Sect. 4.6, item 6-18.

4.8 Cleaning and Maintenance of Bowl

Do NOT place bowl parts on stone floor. Put them on a rubber or wooden surface.

DO NOT USE METAL SCRAPERS OR METAL BRUSHES. Use wooden scrapers, and brushes supplied with the machine.

The lower bowl part need not be removed for cleaning at the end of a run. However, it should be removed once a month. On this occasion, cone of spindle and upper frame part should be cleaned as well.

The exterior of the bowl should be occasionally varnished with an air--drying anti-corrosive paint. Use caoutchouc chloride varnish only!

Prior to shutting down the separator for a longer period, clean it thoroughly. The cleaned bowl parts and all unvarnished machine parts should be wiped dry and greased lightly, to avoid rusting.

5. STARTING THE CLARIFIER

(The Nos. in brackets apply to the enclosed feed design)

1) Prior to starting the bowl, fill it with liquid to be processed or with water.

2) Release brakes by turning both handles 21c clockwise.

3) Make sure that

   a) bowl lock screws are turned back,

   b) gear chamber is filled with sufficient amount of oil (slightly above centre of sight glass),

   c) inlet vessel 34 (handle connection piece 47) is tight.

4) Start the motor. Continue feeding water or liquid to be processed until liquid appears at cylindrical sight glass 36g (54h) in the discharge line. Then stop liquid feed.

5) As soon as the bowl has reached its rated speed (see Sect. 3.4), open the feed liquid supply.

6) Throttle valve in discharge line until overflow occurs. Then open it slowly and adjust it to the desired throughput capacity.

7) The clarifying efficiency depends upon the throughput capacity. If the clarifying efficiency is unsatisfactory, reduce the hourly capacity, either by inserting a smaller reducing tube in the centripetal pump tube or by throttling the cock plug 30o (50) in the feed line. When throttling the cock plug continue throttling the discharge valve close to the overflow limit, to give sufficient discharge pressure and hence foamfree operation of the separator.

6. THE CLARIFIER IN OPERATION

During operation, check the following:

a) Hourly capacity:	Watch flowmeter (58a-x).
b) Pressure in discharge line:	Watch pressure gauge 35 (56).
c) Rpm of bowl:	Watch tachometer 16.
d) Oil level:	Watch sight glass 14.
e) Feed and discharge:	Watch cylindrical sight glasses 30f (49) and 36g (54h).

The bowl should be fed with a constant amount of liquid. The solids contained in the liquid settle down in the individual chambers of the bowl. As soon as the sludge space is filled up with solids, the discharging clarified liquid gets turbid (to be seen at sight glass in discharge line). Stop the bowl and clean it (see Sect. 4.8).

7. STOPPING THE CLARIFIER

1) Stop feed liquid supply.

2) Stop the motor.

3) Brake the bowl by turning both handles 21c to the left.

   DO NOT LOOSEN ANY PART BEFORE THE BOWL HAS STOPPED COMPLETELY.

8. REMOVING THE VERTICAL GEAR PARTS

(The Nos. in brackets apply to gas-tight neck bearing).

1) Remove the feed and discharge connections and disassemble the bowl (see Sect. 4.6 or 4.7).

2) Unscrew spindle nut 258 (273):

On KG 2006 On KG 4006 On KG 8006	left-hand thread	On KG 9006 On KG 10006	right-hand thread

3) By means of lifting device 303, push lower bowl part 251 (271) off the cone of worm spindle 152f (164f).

4) Turn lock screws 8 back and lift out lower bowl part by means of lifting device and pulley block.

5) Loosen oil drain screw 11 and drain oil into pan 307.

6) Unscrew hexagon screws 17. Remove tachometer drive assembly 19a-d with tachometer 16 and take off gasket 18.

7) Remove spindle cap 152 1 (164 1).

8) Unscrew hexagon screws 5 of neck bearing.

9) Remove worm spindle assembly 152a-1 (164a-1) together with "neck bearing bridge assembly with covering" 153a-m (165a-n) by pulling upwards.

10) To remove neck bearing bridge with covering 153a-m (165a-n), hold spindle in inverted position, upper end down, and tap spindle lightly against a wooden surface. Bridge housing with covering will then slide off.

11) Screw off bottom bearing cap 156 (166).

12) Unscrew bottom bearing threaded piece 151a (163c) by turning downwards and remove it together with the other parts of bottom bearing assembly 151b-h (163a, b, d-h).

9. ASSEMBLING THE VERTICAL GEAR PARTS

9.1 General

When assembling the vertical gear parts, proceed in reverse order of disassembly (see Sect. 8) and bear in mind the following:

1) Mount worm spindle 152f (164f) with fitted-on ball bearings in such a way that the outer ring of pendulum ball bearing 152a (164a) has sufficient play in the bottom bearing housing. Make sure that the built-in spindle can be axially moved by hand.

2) When mounting a new worm spindle or a new worm 152d (164d), the toothed rim 217a must be replaced at the same time.

3) IMPORTANT: After each assembly of vertical gear parts, the bowl must be adjusted to correct height (see Sect. 10).

9.2 Assembling the bottom bearing

1) Carefully clean all parts of bottom bearing assembly 151a-h (163a-h).

2) Insert helical spring 151b (163a) in bottom bearing pressure piece.

3) Put bottom bearing pressure piece with inserted helical spring into bottom bearing threaded piece 151a (163c).

4) Insert entire assembly of bottom bearing running parts, viz. pressure disc 151d (163d), ball cage 151f (163f), and running disc 151g (163h) in bottom bearing threaded piece. Then insert expansion ring 151h (163g) in bottom bearing threaded piece.

5) Insert snap ring 151h (163g) in bottom bearing threaded piece.

10. RE-ADJUSTING THE BOWL HEIGHT

Assemble the bowl and the feed and discharge connections, but do NOT mount the hood. Turn the bowl by hand while lowering it by turning bottom bearing threaded piece 151a (163c) to the left until the bowl touches the centripetal pump lightly. Then the bowl should be raised by turning bottom bearing threaded piece in (i.e. to the right) according to the following table:

Model	Turns	Bowl raised by mm	inch.
KG 2006	2	3.5	9/64
KG 4006	2	4	5/32
KG 8006	2	4	5/32
KG 9006	2.5	5	13/64
KG 10006	3	6	15/64

11. THE CENTRIFUGAL CLUTCH

The centrifugal clutch gradually brings the bowl to its rated speed, eliminating premature wear on gear parts and on motor. The friction force of the clutch shoes that regulates the start of the bowl depends on the number of shoes inserted. The acceleration time can be regulated by the number of clutch shoes used.

When fewer clutch shoes are used, the friction moment will be lower, starting time longer, and wear on gear parts and motor less. Only 2 or 3 or 4 or 6 shoes, evenly distributed, may be inserted in the clutch driver (see Sect. 13.2). Note that the driving effect of new clutch shoes will improve after several starts.

For the first few starts, smoking of the clutch is normal; it will cease after a short working period. If the bowl gets up to speed too quickly (see Sect. 3.4), the motor will pull too high a starting current. This condition can be easily overcome by reducing the number of shoes to 4 or 3 or 2. Make sure shoes are evenly distributed (Fig. 3a).

12. REMOVING THE HORIZONTAL GEAR PARTS

12.1 Removing the Clutch Shoes (Fig. 8)

1) Remove ventilation grid from drive side of separator.

2) Loosen hexagon screw 202k with socket wrench 314 and push clutch cover 202h to drive side.

3) Pull clutch shoes 202d out towards drive side.

12.2 Removing the motor (Fig. 8, Drive through normal type motor with centrifugal clutch).

1) Remove lead-in wires from motor terminals.

2) Take out clutch shoes (see Sect. 12.1).

3) Unscrew nuts 201d. Take off lock washers 201c and remove motor with

clutch driver 202g.

4) Loosen screw 202m. Pull clutch driver off the motor shaft end by means of puller 308.

12.3 Removing the motor (Fig. 8, Direct, clutchless drive through special torque-controlled motor).

1) Remove lead-in wires from motor terminals.

2) Remove ventilation grid from drive side of separator.

3) Remove screws from flexible coupling.

4-5) Refer to Sect. 12.2, items 3 and 4.

12.4 Dismantling the centrifugal clutch (Fig. 8).

1) Remove lead-in wires from motor terminals.

2) Take out clutch shoes (see Sect. 12.1).

3) Unscrew hexagon screws 201f. Take off lock washers 201g and remove motor with intermediate flange 201a and clutch driver 202g.

4) Loosen screw 202f in neck of clutch pulley.

5) By means of tool 308 draw clutch pulley 202a off the end of worm wheel shaft 214, on motor side.

12.5 Removing the worm wheel shaft (fig. 8)

1) Remove lead-in wires from motor terminals.

2) Remove ventilation grid from drive side and protection cap side.

3) Take out clutch shoes (see Sect. 12.1).

4) Unscrew hexagon screws 201f. Take off lock washers 201g and remove motor together with intermediate flange 201a and clutch driver 202g.

5) Unscrew hexagon screws 215 and remove protection cap 216.

6) Loosen oil drain screw 11 and drain oil into pan 307.

7) Unscrew hexagon screws 17. Pull out tachometer drive assembly 19a-d with tachometer 16 and remove gasket 18.

8) Loosen screws 217h in clamp plates of worm wheel, while holding clutch pulley 202a to prevent rotation of worm wheel shaft 214.

9) Loosen clamp plates 217f and 217g until worm wheel can be moved on worm wheel shaft.

10) Loosen screw 202f in neck of clutch pulley 202a.

11) Use tool 308 to draw clutch pulley off the end of worm wheel shaft 214, on motor side.

12) Remove keys 203 from worm wheel shaft end, on motor side.

13) Unscrew hexagon screws 209 of bearing cover 211 (protection cap side).

14) Place hard wood block against worm wheel shaft 214, on the motor side, and rap gently with a hammer to drive out shaft with bearing 208, nut 212, and bearing cover 211. When completely loosened from the seat of bearing 208, on the motor side, hold worm wheel with one hand to prevent damage to gear teeth, and pull shaft out with the other hand.

15) Take worm wheel assembly with clamp plates 217a-h out of gear chamber.

13. ASSEMBLING THE HORIZONTAL GEAR PARTS

(The Nos. in brackets apply to gas-tight neck bearing)

13.1 General

When assembling the horizontal gear parts, proceed in reverse order of disassembly (see Sect. 12). Bear in mind the following:

1) When mounting worm wheel assembly with clamp plates, 217a-h, push worm wheel to protection-cap side until it rests against collar of worm wheel shaft 214. This will ensure correct positioning of toothed rim in relation to worm spindle.

2) The worm wheel must be firmly clamped to the worm wheel shaft by tightening both clamp plates 217f and 217g with screws 217h evenly and firmly. When tightening, proceed cross-wise, by single turns. See also Sect. 14.1, item 9).

3) IMPORTANT: When mounting a new toothed rim 217a or a new worm wheel assembly, the worm 152d (164d) or the worm spindle (for KG 2006) must be replaced at the same time.

4) After each assembly of new gear parts, the bowl must be re-adjusted to correct height, (see Sect. 10).

5) Fill gear chamber with oil recommended on page 6, until oil level is slightly above centre of sight glass.

6) Run in new gear parts for about 1 hour prior to installing the bowl.

7) Clutch shoes should be removed at intervals to check for wear, (see Sect. 12.1) As soon as the lining of a clutch shoe is nearly worn down to the rivet heads, the shoe must be replaced to avoid damage to the running surface of ring 202b.

13.2 Inserting the clutch shoes

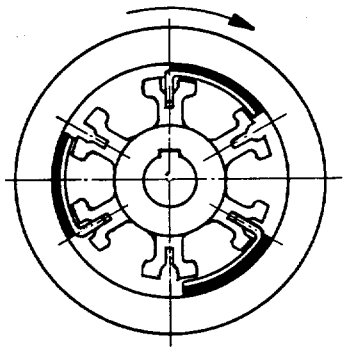

Fig. 3a
Clutch driver
with clutch shoes

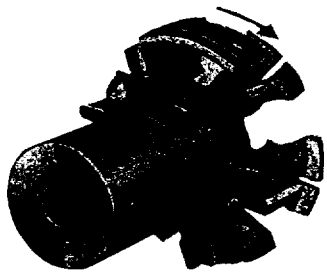

Fig. 3b
Clutch driver
with clutch shoe

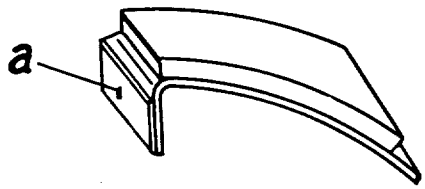

Fig. 3c
Clutch shoe

To insert the clutch shoes, proceed in reverse order of removal (see Sect. 12.1). The following should be kept in mind.

1) The clutch shoes must be inserted in clutch driver 202g evenly distributed (either 2, or 3, or 4, or 6 shoes). See Fig. 3a.

2) The clutch shoes must be pushed (and not pulled) by the clutch driver. They must fit in the slots of the clutch driver. Fig. 3b.

3) After inserting the clutch shoes, push clutch cover 202h all the way in toward clutch pulley 202a until it rests flush against the ribs of clutch driver 202g.

4) Noises that might occur in the centrifugal clutch during start-up of the separator, can be easily eliminated by applying a very light film of graphite paste or Molykote paste to metal lips "a" (Fig.3c) of clutch shoes. If too thick a film is applied, small particles of the paste might be centrifugally thrown on the friction surfaces, thus causing clutch slippage (see Sect. 14.1, item 4, and Sect.14.2, item 1).

14. OPERATIONAL TROUBLES - THEIR CAUSES AND REMEDIES

Troubles	Causes	Remedies
14.1 The bowl does not, or takes too long to come up to rated speed (see Sect. 3.4).	1) Brakes are on.	Release brakes.
	2) Bowl locking screws are in.	Turn bowl locking screws back.
	3) Motor is not properly connected.	See wiring diagrams, page 7.
	4) Friction surfaces of clutch shoes are oily.	Wipe friction surfaces dry. Do NOT use benzine, nor trichlorethylen, nor any other solvent.
	5) Linings of clutch shoes are worn.	Replace clutch shoes (see Sect. 12.1 and 13.2).
	6) Insufficient number of clutch shoes.	Add one or two clutch shoes (see Sect. 11 and 13.2).
	7) Bowl is too high. Centripetal pump grinds against bowl.	Adjust to correct bowl height (see Sect. 10).
	8) Liquid or sludge has collected in the upper frame part, resulting in slow-down of bowl.	Check frame drain: liquid must run out freely. Check shut-off in feed line for tightness. Clean upper frame part.
	9) Clamp plates are not tight; worm wheel slips on shaft.	Tighten long hexagon screws in clamp plates. Tighten crosswise, by single turns, to make sure clamp plates are drawn together evenly (refer to Sect. 13.1).
14.2 The bowl speed drops during operation.	1) Friction surfaces of clutch shoes are oily.	Wipe friction surfaces dry. Do NOT use benzine, nor trichlorethylen, nor any other solvent.
	2) Line voltage is dropping.	Check line voltage.
	3) Speed of motor drops during operation.	Inspect the motor.
14.3 The bowl comes up to speed too quickly (See Sect. 3.4). Motor pulls too high a starting current.	Number of inserted clutch shoes too high. Note that driving effect of new clutch shoes will improve after several starts.	Reduce number of clutch shoes, i.e. from 6 to 4, or from 4 to 3, or from 3 to 2. See that shoes are evenly distributed (refer to Sect. 11 and 13.2).

Troubles	Causes	Remedies
14.4 The separator runs rough.	1) Bowl is not properly assembled or, if plant has several separators, bowl parts may have been interchanged.	Check and assemble bowl properly. Refer to Sect. 4.2 and 4.3.
	2) The separated solids have deposited unevenly during standstill of the bowl.	Clean the bowl (see Sect. 4.6, 4.7, and 4.8.
	3) Neck bearing springs are weak or broken.	Replace all 6 neck bearing springs.
	4) Helical spring in bottom bearing is broken; bowl is found to be about 2 mm too low in the frame.	Check bowl height (see Sect. 10). Replace helical spring (see Sect. 9).
	5) Ball bearings or gear parts are worn.	Change damaged parts. IMPORTANT! As spindle bearings use ball bearings of special running precision only. See List of Parts.
	6) Bowl is damaged and, therefore, out of balance.	Send bowl to factory or authorized factory repair shop. Do NOT attempt to make your own repairs. Never weld or solder. Bowl is made of heat treated steels.

L I S T O F P A R T S

IMPORTANT!

When ordering parts, please indicate the following:

1) Model 2) Serial-No.	of Clarifier: Both designations are shown on the name-plate of the clarifier. The Serial-No. appears also on the frame border.
3) Description 4) Part-No.	of the part to be replaced: For details, see List of Parts. The Part-No. is also shown on all major parts.
5) Bowl-No.	(only required when ordering bowl parts): The bowl-No. appears, in large figures, on bowl lock ring and on lower bowl part:

Part-Nos. followed by letter L (e.g. 3037-1021-L) designate parts which are available in different designs for the separator concerned. To ensure correct delivery of these parts,

state Model and Serial-No. of the Clarifier!

FRAME, TACHOMETER, HOOD, FEED AND DISCHARGE CONNECTIONS (OPEN FEED)

KG 2006 - KG 10006

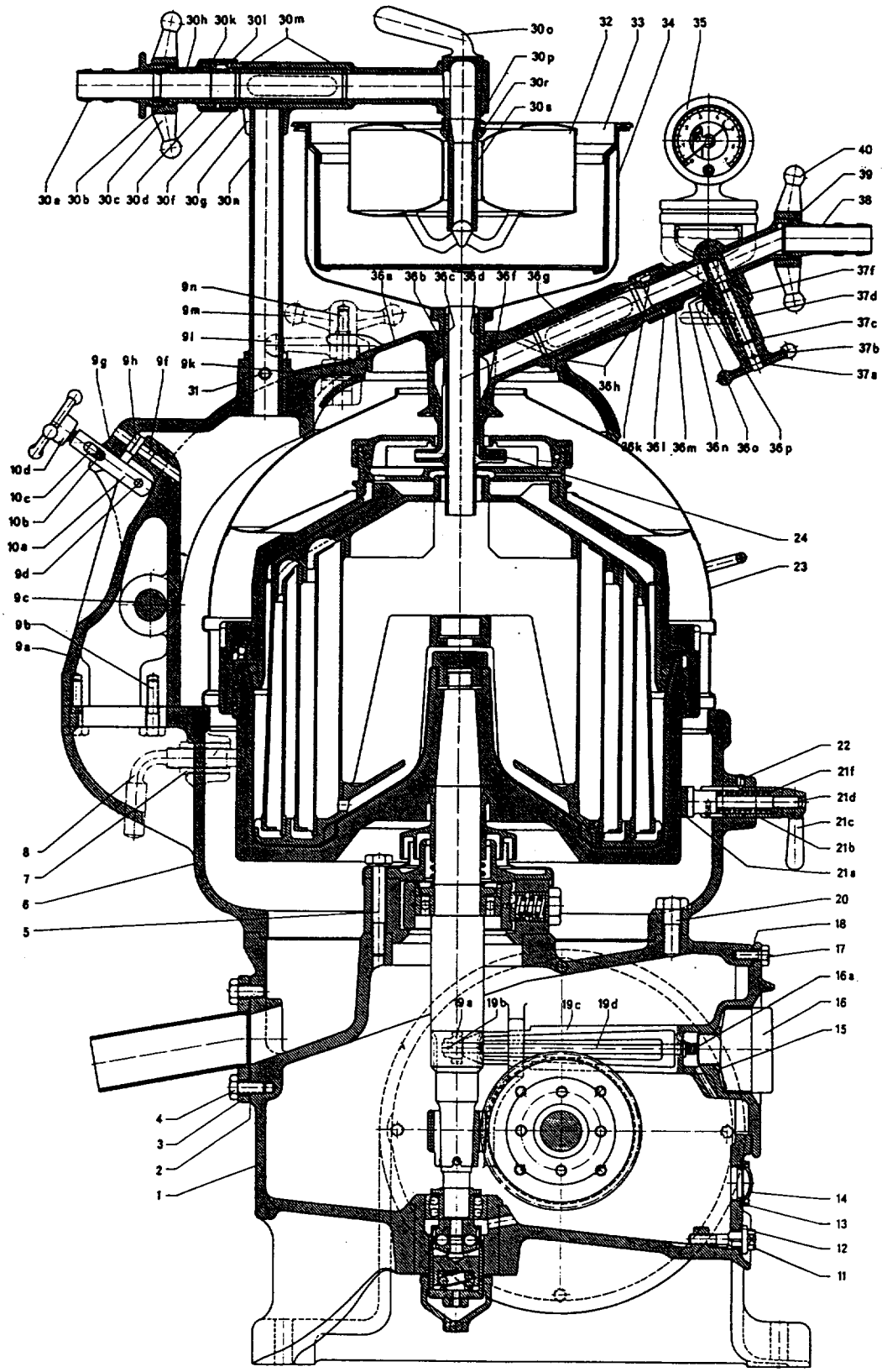

Fig.4

Frame, Tachometer, Hood, Feed and Discharge Connections (Open Feed) KG 2006 - KG 10006

List of Parts shown in Fig. 4

Item No.	Part Description	Number of Pieces	Part-No. KG 2006	KG 4006	KG 8006	KG 9006	KG 10006
-	Frame assembly	1	3034-1100-020	3035-1100-010	3036-1100-060	3043-1100-000	3037-1100-000
1	Lower frame part	1	3033-1001-020	3030-1001-030	3036-1001-030	3037-1001-010	3037-1001-010
2	Gasket	1	0004-5453-740	0004-5457-740	0004-5457-740	0004-5460-740	0004-5460-740
3	Frame drain pipe	1	3033-1045-000	3036-1045-000	3036-1045-000	3037-1045-010	3037-1045-010
4	Hexagon screw M 12x25 DIN 933-5D Kupr.verchr.	2	0019-6968-550	0019-6968-550	0019-6968-550	0019-6968-550	-
4	Hexagon screw M 12x30 DIN 933-5D Kupr.verchr.	2	-	-	-	-	19-6532-55 0
5	Hexagon screw M 12x75 DIN 931-5D kad.	3	0019-6541-090	-	-	-	-
5	Hexagon screw M 12x90 DIN 931-5D kad.	3	-	0019-6544-090	0019-6544-090	-	-
5	Hexagon screw M 16x100 DIN 931-5D kad.	3	-	-	-	0019-6616-090	0019-6616-090
6	Upper frame part	1	3034-1002-000	3035-1002-000	3036-1002-000	3043-1002-000	3037-1002-000
7	Threaded sleeve	2	0019-0781-640	0019-0781-640	0019-0781-640	0019-0783-640	0019-0783-640
8	Bowl locking screw	2	0019-0529-160	0019-0529-160	0019-0529-160	0019-0531-160	0019-0531-160
-	Centripetal pump holder with bracket and hinge screw assembly (9a-10d)	1	3034-1098-000	3035-1098-000	3036-1098-000	3043-1098-000	3037-1098-000
9a	Bracket	1	3034-1143-000	3035-1143-000	3036-1143-000	3037-1143-000	3037-1143-000
9b	Hexagon screw M 12x45 DIN 931-5D kad.	4	0019-6535-090	0019-6535-090	0019-6535-090	0019-6535-090	0019-6535-090
9c	Hinge bolt	1	0805-1833-010	0809-1833-010	0809-1833-010	0964-1833-000	0964-1833-000
-	Threaded pin M 10x18 DIN 553-4D	2	0019-5065-000	0019-5065-000	0019-5065-000	0019-5065-000	0019-5065-000
9d	Cylindrical pin	1	0026-1119-300	0026-1119-300	0026-1119-300	0026-1119-300	0026-1119-300
9f	Stop pin	1	0807-1271-010	0807-1271-010	0807-1271-010	0807-1271-010	0807-1271-010
-	Centripetal pump holder assembly (9g-9n)	1	3034-1090-000	3035-1090-000	3036-1090-000	3043-1090-000	3037-1090-000
9g	Centripetal pump holder	1	3034-1091-000	3035-1091-000	3036-1091-000	3043-1091-000	3037-1091-000
-	Cylindrical pin	3	-	-	-	26-1546-800	26-1546-800
9h	Stop pin	1	0807-1271-010	0807-1271-010	0807-1271-010	0807-1271-010	0807-1271-010
-	Ball type oiler	2	0021-4561-000	0021-4561-000	0021-4561-000	0021-4561-000	0021-4561-000
-	Cover	2	0807-1299-000	0807-1299-000	0807-1299-000	0807-1299-000	0807-1299-000

Frame, Tachometer, Hood, Feed and Discharge Connections (Open Feed) KG 2006 - KG 10006

List of Parts shown in Fig. 4

Item No.	Part Description	Number of Pieces	Part-No. KG 2006	KG 4006	KG 8006	KG 9006	KG 10006
-	Cylindrical screw AM 6x15 DIN 84-Ms 58 verchr.	6	0019-2249-640	0019-2249-640	0019-2249-640	0019-2249-640	0019-2249-640
-	Locking lever, right side	1	0738-1106-030	-	-	-	-
-	Locking lever, left side	1	0738-1106-060	-	-	-	-
-	Cylindrical pin (stop for locking lever)	2	0026-1102-030	-	-	-	-
-	Bolt	2	1072-1104-010	-	-	-	-
-	Helical spring	2	0006-4191-160	-	-	-	-
-	Washer	2	0026-1348-300	-	-	-	-
-	Hexagon nut M 10 DIN 934-Ms 58 verchr.	2	0013-0279-640	-	-	-	-
9k	Cylindrical pin	2	-	0026-1079-030	0026-1079-030	0026-1079-030	0026-1079-030
91	Locking lever	2	-	0958-1106-010	0958-1106-010	0958-1106-010	0958-1106-010
9m	Handle nut	2	-	0013-2020-640	0013-2020-640	0013-2020-640	00013-2020-640
9n	Bolt	2	-	3037-1104-000	3037-1104-000	3037-1104-000	3037-1104-000
-	Hinge screw assembly (10a-d)	1	1072-1110-010	1072-1110-010	1072-1110-010	1072-1110-010	1072-1110-010
10a	Bolt	1	1072-1114-010	1072-1114-010	1072-1114-010	1072-1114-010	1072-1114-010
10b	Helical spring	1	0006-4084-190	0006-4084-190	0006-4084-190	0006-4084-190	0006-4084-190
10c	Pressure piece	1	0807-1373-010	0807-1373-010	0807-1373-010	0807-1373-010	0807-1373-010
-	Cylindrical pin	2	0026-1153-300	0026-1153-300	0026-1153-300	0026-1153-300	0026-1153-300
10d	Pressure screw	1	1072-1109-000	1072-1109-000	1072-1109-000	1072-1109-000	1072-1109-000
11	Oil drain screw	1	0019-0291-640	0019-0291-640	0019-0291-640	0019-0291-640	0019-0291-640
12	Gasket (for oil drain screw)	1	0004-1874-710	0004-1874-710	00 04-1874-710	0004-1874-710	0004-1874-710
13	Gasket (for sight glass)	1	0004-5034-760	0004-5034-760	0004-5034-760	0004-5034-760	0004-5034-760
14	Sight glass	1	0001-0006-640	0001-0006-640	0001-0006-640	0001-0006-640	0001-0006-640
15	+) Felt ring	1	0004-1974-830	0004-1974-830	0004-1974-830	0004-1974-830	0004-1974-830
16	Tachometer assembly	1	8473-3000-000	8473-3000-000	8473-3000-000	8473-3000-000	8473-3000-000
16a	+) Helical spring	1	0006-4013-160	0006-4013-160	0006-4013-160	0006-4013-160	0006-4013-160
17	Hexagon screw M 8x25 DIN 931-5D Kupr. verchr.	3	0019-6490-550	-	-	-	-
17	Hexagon screw M 10x25 DIN 933-5D Kupr.verchr.	3	-	0019-6935-550	0019-6935-550	0019-6935-550	0019-6935-550

+) This part is included in tachometer assembly, item 16; it can, however, also be supplied separately.

List of Parts shown in Fig. 4

Item No.	Part Description	Number of Pieces	Part-No. KG 2006	KG 4006	KG 8006	KG 9006	KG 10006
18	Gasket	1	0004-5228-70 0	0004-5358-70 0	0004-5358-70 0	0004-5359-70 0	0004-5359-70 0
-	Tachometer drive assembly (19a-d)	1	3033-3490-00 0	3036-3490-00 0	3036-3490-00 0	3037-3490-01 0	3037-3490-01 0
19a	Toothed wheel	1	3037-3483-00 0	3037-3483-00 0	3037-3483-00 0	3037-3483-00 0	3037-3483-00 0
19b	Notched pin	1	0026-1561-12 0	0026-1561-12 0	0026-1561-12 0	0026-1561-12 0	0026-1561-12 0
19c	Tachometer housing	1	3033-3493-00 0	3036-3493-01 0	3036-3493-01 0	3037-3493-03 0	3037-3493-03 0
-	Oil fill plug	1	-	1072-1005-01 0	1072-1005-01 0	1072-1005-01 0	1072-1005-01 0
-	Gasket	1	-	0004-5036-74 0	0004-5036-74 0	0004-5036-74 0	0004-5036-74 0
19d	Shaft	1	3033-3485-00 0	3036-3485-00 0	3036-3485-00 0	3037-3485-01 0	3037-3485-01 0
-	Oil fill plug	1	1072-1005-01 0	-	-	-	-
-	Gasket	1	0004-5036-74 0	-	-	-	-
20	Hexagon screw M 12x35 DIN 931-5D kad.	4	0019-6533-09 0	-	-	-	-
20	Hexagon screw M 16x45 DIN 931-5D kad.	4	-	0019-6605-09 0	0019-6605-09 0	-	-
20	Hexagon screw M 16x55 DIN 931-5D kad.	4	-	-	-	0019-6607-09 0	0019-6607-09 0
-	Brake assembly (21a-f)	2	3036-1043-01 0	3036-1043-01 0	3036-1043-01 0	3037-1043-00 0	3037-1043-00 0
21a	+) Brake lining	2	0021-4094-86 0	0021-4094-86 0	0021-4094-86 0	0021-4096-85 0	0021-4096-85 0
-	+) Countersunk rivet (for 21a)	4	0026-1262-55 0	0026-1262-55 0	0026-1262-55 0	-	-
-	+) Countersunk rivet (for 21a)	8	-	-	-	0026-1262-55 0	0026-1262-55 0
21b	Brake housing	2	0021-3534-64 0	0021-3534-64 0	0021-3534-64 0	0021-3534-30 0	0021-3534-30 0
21c	Handle	2	0021-3515-69 0	0021-3515-69 0	0021-3515-69 0	0021-3514-69 0	0021-3514-69 0
21d	Brake bolt assembly	2	3036-1031-01 0	3036-1031-01 0	3036-1031-01 0	3037-1031-00 0	3037-1031-00 0
21f	Helical spring	2	0006-4195-16 0	0006-4195-16 0	0006-4195-16 0	0006-4208-16 0	0006-4208-16 0
22	Threaded pin	2	0019-5053-00 0	0019-5053-00 0	0019-5053-00 0	0019-5053-00 0	0019-5053-00 0

+) This part is included in brake bolt assembly, item 21d; it can, however, also be supplied separately.

Frame, Tachometer, Hood, Feed and Discharge Connections (Open Feed) KG 2006 - KG 10006

List of Parts shown in Fig. 4

Item No.	Part Description	Number of Pieces	Part-No. KG 2006	KG 4006	KG 8006	KG 9006	KG 10006
23	Hood assembly	1	3034-7759-L	3035-7759-L	0342-7759-L	3043-7759-L	3037-7759-L
24	Centripetal pump assembly	1	3034-2213-L	3036-2213-L	3036-2213-L	3036-2213-L	3037-2213-L
-	Feed and discharge connections, complete (30a-40)	1	3034-2299-L	3036-2299-L	3036-2299-L	3036-2299-L	3037-2299-L
-	Feed line assembly (30a-s)	1	3034-2170-L	3036-2170-L	3036-2170-L	3036-2170-L	3036-2170-L
30a	Hose nipple	1	0954-2805-L	0954-2805-L	0954-2805-L	0954-2805-L	0954-2805-L
30b	Gasket	1	0007-2243-L	0007-2243-L	0007-2243-L	0007-2243-L	0007-2243-L
30c	Handle nut	1	0013-2697-L	00 13-2697-L	0013-2697-L	00 13-2697-L	0013-2697-L
30d	Nut	1	3036-2225-L	3036-2225-L	3036-2225-L	3036-2225-L	3036-2225-L
30f	Cylindrical sight glass	1	0001-0090-820	0001-0090-820	0001-0090-820	0001-0090-820	0001-0090-820
30g	Cock housing	1	3034-2187-L	3036-2187-L	3036-2187-L	3036-2187-L	3036-2187-L
30h	Feed pipe connection	1	0954-2775-L	0954-2775-L	0954-2775-L	0954-2775-L	0954-2775-L
30k	Threaded piece	1	3036-2226-L	3036-2226-L	3036-2226-L	3036-2226-L	3036-2226-L
30l	Key	2	0026-1730-160	0026-1730-160	0026-1730-160	0026-1730-160	0026-1730-160
30m	Gasket	2	0007-2299-700	00 07-2299-700	0007-2299-700	0007-2299-700	0007-2299-700
30n	Support	1	0339-2015-000	0339-2015-000	0339-2015-000	0339-2015-000	0339-2015-000
30o	Cock plug	1	3034-2274-L	3036-2274-L	3036-2274-L	3036-2274-L	3036-2274-L
30p	Helical spring	1	0006-4168-510	0006-4194-160	0006-4194-160	0006-4194-160	0006-4194-160
30r	Threaded ring	1	3034-2174-L	3036-2174-L	3036-2174-L	3036-2174-L	3036-2174-L
30s	Feed pipe	1	3032-2223-L	3036-2223-L	3036-2223-L	3036-2223-L	3036-2223-L
31	Screw	1	0019-1390-150	0019-1390-150	0019-1390-150	0019-1390-150	0019-1390-150
32	Float	1	0954-2730-L	0342-2730-L	0342-2730-L	0342-2730-L	0342-2730-L
33	Strainer	1	0954-2720-L	0957-2730-L	0957-2730-L	0957-2730-L	0957-2730-L
34	Inlet vessel	1	3034-2700-L	3036-2700-L	3036-2700-L	3036-2700-L	3037-2700-L
-	Set of reducing tubes	1	3034-2214-010	3036-2214-010	3036-2214-010	3036-2214-010	3037-2214-010
35	Pressure gauge assembly	1	8918-2000-L	8918-2000-L	8918-2000-L	8918-2000-L	8918-2000-L
-	Discharge assembly (36a-p)	1	3034-2295-L	3036-2295-L	3036-2295-L	3036-2295-L	3037-2295-L
36a	Discharge	1	3034-2285-L	3036-2285-L	3036-2285-L	3036-2285-L	3037-2285-L
36b	Expansion ring	1	0026-5548-500	0026-1462-500	0026-1462-500	0026-1462-500	0026-5560-500
36c	Washer	1	0026-5748-L	0026-5522-L	0026-5522-L	0026-5522-L	0026-5524-L

Frame, Tachometer, Hood, Feed and Discharge Connections (Open Feed) KG 2006 - KG 10006

List of Parts shown in Fig. 4

Item No.	Part Description	Number of Pieces	Part-No. KG 2006	KG 4006	KG 8006	KG 9006	KG 10006
36d	Upper gasket	1	0007-2271-L	0007-2288-L	0007-2288-L	0007-2288-L	0007-2304-700
36f	Lower gasket	1	0007-2246-L	0007-2256-L	0007-2256-L	0007-2256-L	0007-2107-750
36g	Cylindrical sight glass	1	0001-0090-820	0001-0090-820	0001-0090-820	0001-0090-820	0001-0097-820
36h	Gasket (for cylindrical sight glass)	2	0007-2299-L	0007-2299-L	0007-2299-L	0007-2299-L	0007-2289-700
36k	Key (for item 36m)	1	0026-1730-L	0026-1730-L	0026-1730-L	0026-1730-L	0026-1730-L
-	Gasket (for pressure gauge)	1	0007-2210-L	0007-2210-L	0007-2210-L	0007-2210-L	0007-2210-L
-	Knurled screw	1	0019-0222-L	0019-0222-L	0019-0222-L	0019-0222-L	-
-	Ball	1	0026-1493-400	0026-1493-400	0026-1493-400	0026-1493-400	-
36l	Nut	1	3036-2225-L	3036-2225-L	3036-2225-L	3036-2225-L	3037-2225-L
36m	Valve connection	1	3036-2287-L	3036-2287-L	3036-2287-L	3036-2287-L	3037-2287-L
36n	Gasket	2	0007-2285-L	0007-2285-L	0007-2285-L	0007-2285-L	0007-2277-L
36o	Washer	1	0026-5508-L	0026-5508-L	0026-5508-L	0026-5508-L	0026-5750-L
36p	Expansion ring	1	0026-1445-500	0026-1445-500	0026-1445-500	0026-1445-500	0026-5548-L
-	Stuffing box assembly (37a-f)	1	1072-2273-L	1072-2273-L	1072-2273-L	1072-2273-L	3037-2273-L
37a	Handle	1	0807-2838-L	0807-2838-L	0807-2838-L	0807-2838-L	0807-2838-L
37b	Cylindrical pin	1	0026-1062-L	0026-1062-L	0026-1062-L	0026-1062-L	0026-1062-L
37c	Stuffing box	1	1072-2284-L	1072-2284-L	1072-2284-L	1072-2284-L	3037-2284-L
37d	Threaded bolt	1	1072-2278-L	1072-2278-L	1072-2278-L	1072-2278-L	3037-2278-010
37f	Round slide valve	1	1072-2279-L	1072-2279-L	1072-2279-L	1072-2279-L	3037-2279-L
38	Hose nipple	1	0342-2805-L	0342-2805-L	0342-2805-L	0342-2805-L	3037-2222-L
39	Gasket	1	0007-2243-700	0007-2243-L	0007-2243-L	0007-2243-L	0007-2210-700
40	Handle nut	1	0013-2697-L	0013-2697-L	0013-2697-L	0013-2697-L	0013-2707-L

FEED AND DISCHARGE CONNECTIONS WITH 2 FEED COCKS, KG 2006 - KG 10006
(Enclosed Feed)

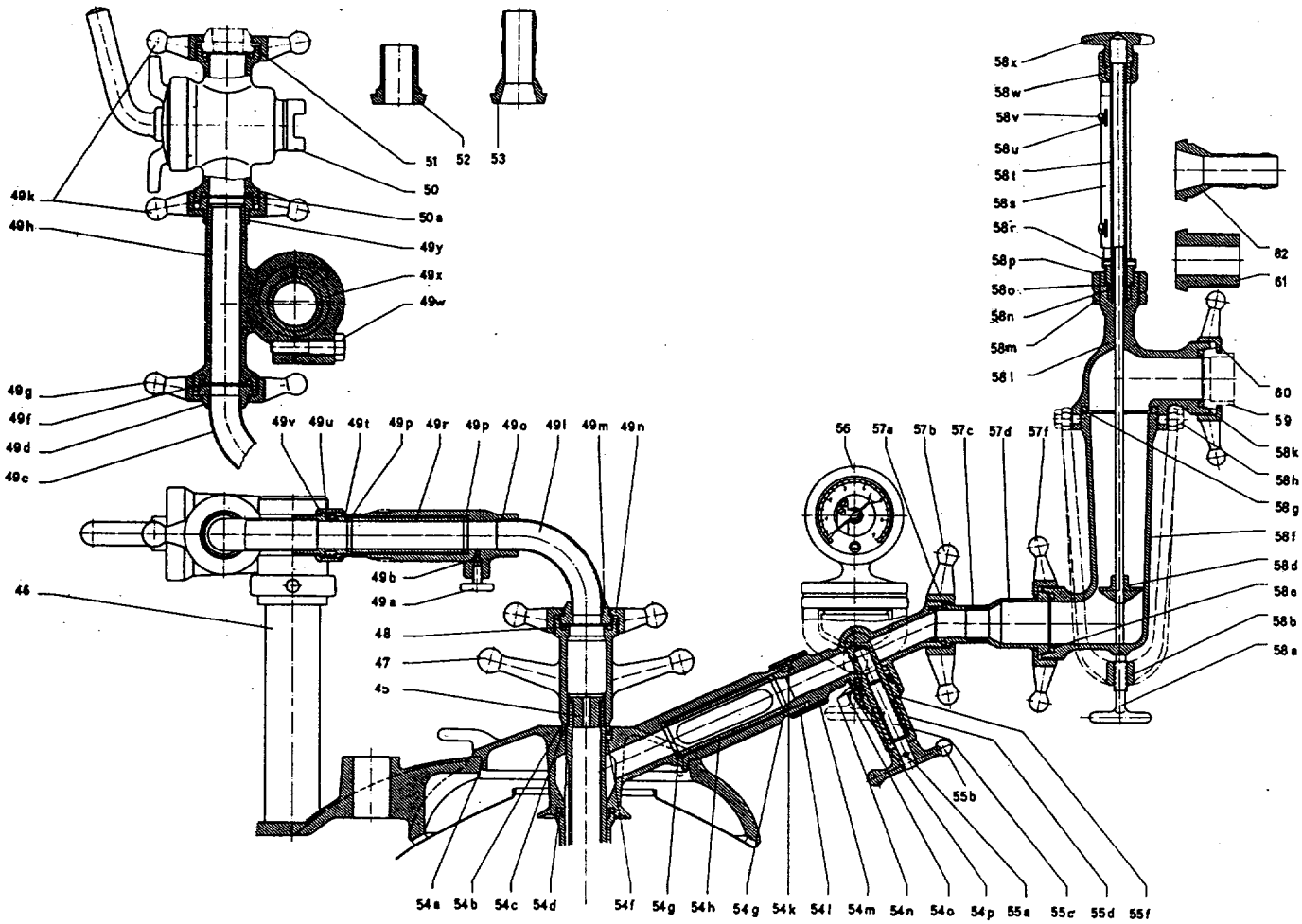

Fig. 5

Feed and Discharge Connections with 2 Feed Cocks, KG 2006 - KG 10006 (Enclosed Feed)

List of Parts shown in Fig.5

Item-No.	Part Description	Number of Pieces	Part-No. KG 2006	KG 4006	KG 8006	KG 9006	KG 10006
-	Feed and discharge connections, complete, - with 2 cocks	1	3034-2296-L	3036-2296-L	3036-2296-L	3043-2296-L	3037-2296-L
45	Set of reducing tubes	1	3034-2214-010	3036-2214-010	3036-2214-010	3036-2214-010	3037-2214-010
46	Support	1	3034-2206-000	3036-2206-000	3036-2206-000	3036-2206-000	3037-2206-000
-	Hexagon screw M 12x55 DIN 931-5D kad.	1	0019-6537-090	0019-6537-090	0019-6537-090	0019-6537-090	0019-6537-090
47	Handle connection piece	1	3034-2191-L	3036-2191-L	3036-2191-L	3036-2191-L	3037-2191-L
48	Gasket	1	0007-2209-700	0007-2209-700	0007-2209-700	0007-2209-700	0007-2211-700
-	Feed line assembly (49a-y)	1	3036-2220-L	3036-2220-L	3036-2220-L	3043-2220-L	3037-2220-L
49a	Knurled screw	1	0019-0222-L	0019-0222-L	0019-0222-L	0019-0222-L	-
49b	Ball	1	0026-1493-400	0026-1493-400	0026-1493-400	0026-1493-400	-
-	Hose cock	1	-	-	-	-	0018-1526-L
-	Gasket	1	-	-	-	-	00 07-2102-750
49c	Bend	1	0002-6185-L	0002-6185-L	0002-6185-L	0002-6185-L	0002-6205-L
49d	Cone connection	1	0018-3938-L	0018-3938-L	0018-3938-L	0018-3938-L	0018-3949-L
49f	Gasket	1	0007-2209-700	0007-2209-700	0007-2209-700	0007-2209-700	0007-2210-700
49g	Handle nut	1	0013-2704-L	0013-2704-L	0013-2704-L	0013-2704-L	0013-2707-L
49h	Cock connection piece	1	3036-2194-L	3036-2194-L	3036-2194-L	3036-2194-L	3037-2194-L
49k	Handle nut	4	0013-2704-L	0013-2704-L	0013-2704-L0	0013-2704-L	0013-2707-L
49l	Bend	1	0002-6185-L	0002-6185-L	0002-6185-L	0002-6185-L	0002-6205-L
49m	Cone connection	1	0018-3938-L	0018-3938-L	0018-3938-L	0018-3938-L	0018-3958-L
49n	Handle nut	1	0013-2704-L	0013-2704-L	0013-2704-L	0013-2704-L	0013-2710-L
49o	Housing for cylindrical sight glass	1	0964-2817-L	0964-2817-L	0964-2817-L	0964-2817-L	3037-2187-L
49p	Gasket	2	0007-2299-700	0007-2299-700	0007-2299-700	0007-2299-700	0007-2289-700
49r	Cylindrical sight glass	1	0001-0090-820	0001-0090-8200	0001-0090-820	0001-0090-820	0001-0097-820
49t	Ring	1	0964-2808-L	0964-2808-L	0964-2808-L	0964-2808-L	3037-2178-L
49u	Key	2	0026-1730-L	0026-1730-L	0026-1730-L	0026-1730-L	0026-1730-L
49v	Nut	1	0339-2816-L	0339-2816-L	0339-2816-L	0339-2816-L	3037-2225-L
49w	Hexagon screw M 12x55 DIN 931-5D kad.	1	0019-6537-090	0019-6537-09 0	0019-6537-090	0019-6537-090	0019-6537-090
49x	Adjusting sleeve	1	3037-2185-L	3037-2185-L	3037-2185-L	3037-2185-L	3037-2185-L
49y	Cone connection	1	0018-3943-L	0018-3943-L	0018-3943-L	0018-3943-L	0018-3954-L

Feed and Discharge Connections with 2 Feed Cocks, KG 2006 - KG 10006 (Enclosed Feed)

List of Parts shown in Fig.5

Item-No.	Part Description	Number of Pieces	Part-No. KG 2006	KG 4006	KG 8006	KG 9006	KG 10006
50	Straight-way cock assembly	2	0018-3971-L	0018-3971-L	0018-3971-L	0018-3971-L	0018-3972-L
50a	Gasket	4	0007-2209-700	0007-2209-700	0007-2209-700	00 07-2209-700	0007-2210-700
51	Cone connection (for soldering-in a pipe)	2	0018-3938-L	0018-3938-L	0018-3938-L	0018-3938-L	0018-3949-L
52	Cone connection (for screwing-on a pipe)	2	3036-2182-010	3036-2182-010	3036-2182-010	3036-2182-010	18-4184-L
53	Hose nipple 25 mm dia.	2	3036-2222-L	3036-2222-L	3036-2222-L	3036-2222-L	3037-2222-L
53	Hose nipple 38 mm dia.	2	-	-	-	-	0286-2805-L
-	Discharge assembly (54a-p)	1	3034-2295-L	3036-2295-L	3036-2295-L	3036-2295-L	3037-2295-L
54a	Discharge	1	3034-2285-L	3036-2228-L	3036-2228-L	3036-2228-L	3037-2285-L
54b	Expansion ring	1	0026-5548-500	0026-1462-500	0026-1462-500	0026-1462-500	0026-5560-500
54c	Washer	1	0026-5748-L	0026-5522-L	0026-5522-L	0026-5522-L	0026-5524-L
54d	Gasket	1	0007-2246-L	0007-2256-L	0007-2256-L	0007-2256-L	0007-2107-750
54f	Gasket	1	0007-2271-L	0007-2288-L	0007-2288-L	0007-2288-L	0007-2304-700
54g	Gasket (for cylindrical sight glass)	2	0007-2299-L	0007-2299-L	0007-2299-L	0007-2299-L	0007-2289-700
54h	Cylindrical sight glass	1	0001-0090-820	0001-0090-820	0001-0090-820	0001-0090-820	0001-0097-820
54k	Key	1	0026-1730-L	0026-1730-L	0026-1730-L	0026-1730-L	0026-1730-L
54l	Nut	1	3036-2225-L	3036-2225-L	3036-2225-L	3036-2225-L	3037-2225-L
54m	Valve connection	1	3036-2287-L	3036-2287-L	3036-2287-L	3036-2287-L	3037-2287-L
-	Gasket (for pressure gauge)	1	0007-2210-L	0007-2210-L	0007-2210-L	0007-2210-L	0007-2210-L
-	Knurled screw	1	0019-0222-L	0019-0222-L	00 19-0222-L	0019-0222-L	-
-	Ball	1	0026-1493-400	0026-1493-400	0026-1493-400	0026-1493-400	-
-	Hose cock	1	-	-	-	-	0018-1526-L
-	Gasket (for hose cock)	1	-	-	-	-	0007-2102-750
54n	Gasket	2	0007-2285-L	0007-2285-L	0007-2285-L	0007-2285-L	00 07-2277-L
54o	Washer	1	0026-5508-L	0026-5508-L	0026-5508-L	0026-5508-L	00 26-5750-L
54p	Expansion ring	1	0026-1445-500	0026-1445-500	0026-1445-500	0026-1445-500	0026-5548-L
-	Stuffing box assembly (55a-f)	1	1072-2273-L	1072-2273-L	1072-2273-L	1072-2273-L	3037-2273-L
55a	Cylindrical pin	1	0026-1062-L	0026-1062-L	0026-1062-L	0026-1062-L	00 26-1062-L
55b	Handle	1	0021-3103-L	0021-3103-L	0021-3103-L	0021-3103-L	00 21-3103-L
55c	Threaded bolt	1	1072-2278-L	1072-2278-L	1072-2278-L	1072-2278-L	3037-2278-010
55d	Stuffing box	1	1072-2284-L	1072-2284-L	1072-2284-L	1072-2284-L	3037-2284-L
55f	Round slide valve	1	1072-2279-L	1072-2279-L	1072-2279-L	1072-2279-L	3037-2279-L
56	Pressure gauge assembly	1	8918-2000-L	8918-2000-L	8918-2000-L	8918-2000-L	8918-2000-L

Feed and Discharge Connections with 2 Feed Cocks, KG 2006 - KG 10006 (Enclosed Feed)

List of Parts shown in Fig.5

Item No.	Part Description	Number of Pieces	Part-No. KG 2006	KG 4006	KG 8006	KG 9006	KG 10006
-	Joint assembly (57a-f)	1	3036-2165-L	3036-2165-L	3036-2165-L	3036-2165-L	3037-2165-L
57a	Gasket	1	0007-2243-700	0007-2243-70 0	0007-2243-70 0	0007-2243-70 0	0007-2243-70 0
57b	Handle nut	1	0013-2697-L	0013-2697-L	0013-2697-L	0013-2697-L	0013-2697-L
57c	*Soldered pipe connection	1	0339-2805-L	0339-2805-L	0339-2805-L	0339-2805-L	0339-2805-L
57d	Taper piece	1	0018-4179-L	0018-4179-L	0018-4179-L	0018-4179-L	0018-4179-L
57f	Handle nut	1	0013-2707-L	0013-2707-L	0013-2707-L	0013-2707-L	00013-2707-L
-	Flowmeter assembly (58a-x)	1	8021-2000-L	8021-2000-L	8021-2000-L	8021-2000-L	8021-2100-L
58a	Handle screw	1	0019-0002-L	0019-0002-L	0019-0002-L	0019-0002-L	0019-0002-L
58b	Clamp	1	8021-2004-L	8021-2004-L	8021-2004-L	8021-2004-L	8021-2004-L
58c	Gasket	1	0007-2210-75 0	0007-2210-75 0	00 07-2210-75 0	0007-2210-75 0	0007-2210-75 0
58d	Cone float	1	8021-2012-L	8021-2012-L	8021-2012-L	8021-2012-L	8021-2112-L
58f	Inlet cup	1	8021-2001-L	8021-2001-L	8021-2001-L	8021-2001-L	8021-2001-L
58g	Gasket	1	0007-2279-75 0	0007-2279-75 0	0007-2279-75 0	00 07-2279-75 0	0007-2279-75 0
58h	Hexagon screw with pin M 12x15	2	0019-0171-L	0019-0171-L	00 19-0171-L	00 19-0171-L	0019-0171-L
58k	Gasket	1	0007-2210-75 0	0007-2210-75 0	0007-2210-75 0	0007-2210-75 0	00 07-2210-75 0
58l	Outlet pipe	1	8021-2003-L	8021-2003-L	8021-2003-L	8021-2003-L	8021-2003-L
58m	Counter-nut	1	8020-2019-L	8020-2019-L	8020-2019-L	8020-2019-L	8020-2019-L
58n	Gasket	1	0007-2298-70 0	0007-2298-70 0	0007-2298-70 0	0007-2298-70 0	0007-2298-70 0
58o	Washer	1	0026-1375-L	0026-1375-L	0026-1375-L	0026-1375-L	00 26-1375-L
58p	Intermediate piece	1	8020-2002-L	8020-2002-L	8020-2002-L	8020-2002-L	8020-2002-L
58r	Pressure screw	1	4910-2208-L	4910-2208-L	4910-2208-L	4910-2208-L	4910-2208-L
58s	Scale	1	8021-2017-000	8021-2017-00 0	8021-2017-00 0	8021-2017-00 0	8021-2117-00 0
58t	Cylindrical sight glass	1	0001-0083-82 0	00 01-0083-82 0	0001-0083-82 0	0001-0083-82 0	00 01-0083-82 0
58u	Gasket	2	00 04-5261-720	00 04-5261-72 0	0004-5261-72 0	0004-5261-72 0	00 04-5261-72 0
58v	Lens head screw AM 4x8 DIN 85-Ms 58 verchr.	2	0019-2478-L	0019-2478-L	0019-2478-L	0019-2478-L	0019-2478-L
58w	Gasket	1	0007-2298-700	0007-2298-70 0	0007-2298-70 0	0007-2298-70 0	0007-2298-70 0
58x	Handle screw	1	8020-2010-L	8020-2010-L	8020-2010-L	8020-2010-L	8020-2010-L
59	Cone connection (soldered)	1	0018-3949-L	0018-3949-L	0018-3949-L	0018-3949-L	00 18-3949-L
60	Handle nut	1	0013-2707-L	0013-2707-L	00 13-2707-L	0013-2707-L	00 13-2707-L
61	Cone connection (threaded)	1	0018-4184-L	0018-4184-L	00 18-4184-L	00 18-4184-L	00 18-4184-L
62	Hose nipple 25 mm dia.	1	3037-2222-L	3037-2222-L	3037-2222-L	3037-2222-L	3037-2222-L
62	Hose nipple 38 mm dia.	1	-	-	-	-	0286-2805-L

* On KG 10.006 this part is not included in joint assembly (57a-f).

Feed and Discharge Connections with 1 Feed Cock KG 2006 - KG 10006 (Enclosed Feed)

All parts are identical with those of feed and discharge connections with 2 feed cocks, except for the parts as listed below.

Item No.	Part Description	Number of Pieces	Part-No. KG 2006	KG 4006	KG 8006	KG 9006	KG 10006
49h	Cock connecting piece	1	3036-2193-L	3036-2193-L	3036-2193-L	3036-2193-L	3037-2193-L
49k	Handle nut	2	13-2704-L	13-2704-L	13-2704-L	13-2704-L	13-2707-L
50	Straight-way cock	1	18-3971-L	18-3971-L	18-3971-L	18-3971-L	18-3972-L
51	Cone connection (for soldering-in a pipe)	1	18-3938-L	18-3938-L	18-3938-L	18-3938-L	18-3949-L
52	Cone connection (for screwing-on a pipe)	1	3036-2182-01	3036-2182-01	3036-2182-01	3036-2182-01	3036-2182-01
53	Hose nipple 25 mm dia.	1	3036-2222-L	3036-2222-L	3036-2222-L	3036-2222-L	3037-2222-L
53	Hose nipple 38 mm dia.	1	-	-	-	-	0286-2805-L

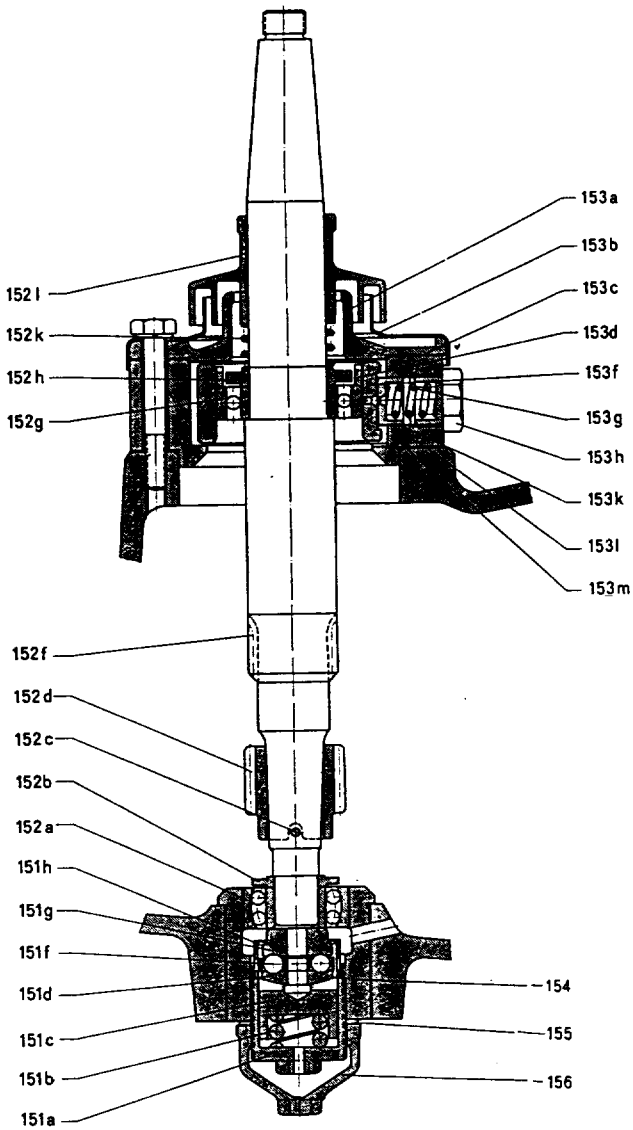

Fig. 6a

(Bottom bearing housing pressed-in)

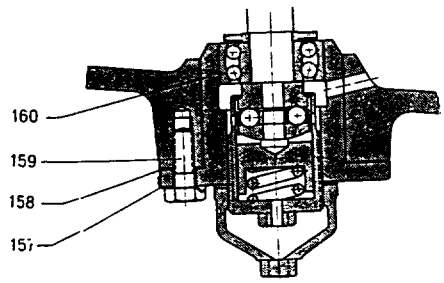

Fig. 6b

(Bottom bearing housing fastened with screws)

Vertical Gear Parts KG 2006 - KG 10006 (for 1430 rpm of Motor)

(For gear parts for 1720 rpm of motor: see page 46)

List of Parts shown in Figures 6a and 6b

Item No.	Part Description	Number of Pieces	Part-No. KG 2006	KG 4006	KG 8006	KG 9006	KG 10006
-	*** Gear assembly	1	3033-3300-010	3036-3300-03 0	3036-3300-13 0	3043-3300-010	3037-3300-020
-	Bottom bearing assembly (151a-h)	1	0010-3000-000	0010-4200-01 0	0010-4200-01 0	0010-5800-000	0010-5800-000
151a	Bottom bearing threaded piece	1	0010-3002-000	0010-4202-00 0	0010-4202-00 0	00 10-5802-10 0	0010-5802-100
151b	Helical spring	1	0006-4209-160	0006-4272-16 0	0006-4272-16 0	0006-4272-16 0	0006-4272-160
151c	Bottom bearing pressure piece	1	0010-3001-200	0010-4201-20 0	0010-4201-20 0	0010-5801-20 0	0010-5801-200
-	Set of bottom bearing running parts (151d-g)	1	0010-3010-000	0010-4210-00 0	0010-4210-00 0	0010-5810-000	0010-5810-000
151d	** Bottom bearing pressure disc	1	-	-	-	-	-
151f	** Ball cage	1	-	-	-	-	-
151g	** Bottom bearing running disc	1	-	-	-	-	-
151h	Expansion ring	1	0026-1473-170	0026-1482-17 0	0026-1482-17 0	0026-1486-17 0	0026-1486-17 0
-	*** Worm spindle assembly (152a-l)	1	3033-3429-010	3036-3429-03 0	3036-3429-04 0	3043-3429-010	3037-3429-020
152a	Pendulum ball bearing 1303M/ P 62	1	0011-1303-030	-	-	-	
152a	Pendulum ball bearing 2305M/ P 62	1	-	0011-2305-030	0011-2305-030	0011-2305-030	0011-2305-030
152b	Ball bearing locking ring	1	0008-1708-000	0008-2508-000	0008-2508-000	0008-2508-000	0008-2508-000
152c	Notched pin	1	-	0026-1567-120	0026-1567-120	0026-1567-120	0026-1567-120
-	*** Worm spindle	1	3033-3420-010	-	-	-	
152d	*** Worm	1	-	3036-3423-03 0	3036-3423-04 0	3043-3423-010	3037-3423-020
152f	Spindle	1	-	3036-3410-00 0	3036-3410-00 0	3037-3410-010	3037-3410-010
152g	Ball bearing 6207/P 62	1	11-6207-010	-	-	-	-
152g	Ball bearing 6209/P 62	1	-	0011-6209-01 0	0011-6209-01 0	-	-
152g	Ball bearing 6210/P 62	1	-	-	-	0011-6210-010	0011-6210-010
152h	Ball bearing locking ring	1	0008-3508-000	0008-4508-00 0	0008-4508-00 0	0008-5008-00 0	0008-5008-00 0
152k	Spindle spring	1	0006-4226-160	0006-4231-16 0	0006-4231-16 0	0006-4227-160	0006-4227-160
152l	Spindle cap	1	0008-3501-500	0008-4501-50 0	0008-4501-50 0	0008-5001-510	0008-5051-510

** This part cannot be supplied separately, but only assembled with parts 151d-g.
*** For 1430 rpm of motor only, and for the bowl speed stated on page 54 and 55.
For reduced bowl speed be sure to refer to Sect. 3.4 !

Vertical Gear Parts KG 2006 - KG 10006 (for 1430 rpm of Motor)

(For gear parts for 1720 rpm of motor: see page 46)

List of Parts shown in Figures 6a and 6b

Item No.	Part Description	Number of Pieces	Part-No. KG 2006	KG 4006	KG 8006	KG 9006	KG 10006
-	Neck bearing bridge with covering, complete (153a-m)	1	0008-3500-200	0008-4500-200	0008-4500-200	0008-5000-050	0008-5000-050
153a	Protecting cap	1	0008-3502-230	0008-4502-230	0008-4502-230	0008-5002-230	0008-5002-23 0
153b	Protecting shield	1	0008-3503-080	0008-4503-080	0008-4503-08 0	0008-5003-08 0	0008-5003-08 0
153c	Gasket 110/162 mm dia. (covering)	1	0004-5002-770	-	-	-	-
153c	Gasket 115/182 mm dia. (covering)	1	-	0004-5016-770	0004-5016-77 0	-	-
153c	Gasket 125/208 mm dia. (covering)	1	-	-	-	0004-5192-770	0004-5192-77 0
153d	Distance ring	1	0008-3509-000	0008-4509-000	0008-4509-00 0	0008-5009-000	0008-5009-00 0
-	Neck bearing bridge assembly (153f-l)	1	0008-3510-210	0008-4510-200	0008-4510-200	0008-5010-050	0008-5010-05 0
153f	Pressure ring	1	0008-3507-090	0008-4507-090	0008-4507-09 0	0008-5007-090	0008-5007-09 0
153g	Set of neck bearing springs	1	0006-4373-060	0006-4306-060	0006-4306-06 0	0006-4240-060	0006-4240-06 0
153h	Threaded nipple	6	0019-1420-030	0019-1423-030	0019-1423-030	0019-1426-150	0019-1426-15 0
153k	Spring piston	6	0026-1286-130	0026-1289-110	0026-1289-11 0	0026-5724-130	0026-5724-13 0
1531	Neck bearing bridge	1	0008-3506-230	0008-4506-230	0008-4506-230	0008-5006-080	0008-5006-08 0
153m	Gasket 110/162 mm dia. (frame border)	1	0004-5002-770	-	-	-	-
153m	Gasket 129/182 mm dia. (frame border)	1	-	0004-5017-770	0004-5017-770	-	-
153m	Gasket 135/208 mm dia. (frame border)	1	-	-	-	0004-5014-770	0004-5014-77 0
154	Bottom bearing housing (pressed in)	1	-	3036-1112-000	3036-1112-00 0	3037-1112-010	3037-1112-01 0
-	Threaded pin M 8x15 DIN 553-4D	1	-	0019-5053-00 0	0019-5053-000	0019-5053-00 0	0019-5053-00 0
155	Gasket	1	0004-1891-710	0004-5048-740	0004-5048-740	0004-5313-740	0004-5313-74 0
156	Bottom bearing cap	1	0010-3003-200	0010-4203-200	0010-4203-20 0	0010-5803-200	0010-5803-20 0
157	Safety washer	4	-	0026-5892-600	0026-5892-60 0	-	-
158	Gasket	1	0004-5254-770	0004-5252-770	0004-5252-770	-	-
-	Lock washer	4	0026-1337-170	-	-	-	-
159	Hexagon screw M 10x25 DIN 933-5D kad.	4	0019-6935-090	-	-	-	-
159	Hexagon screw M 12x35 DIN 931-5D kad.	4	-	0019-6533-090	0019-6533-090	-	-
160	Bottom bearing housing (fastened with screws)	1	3033-1112-010	3036-1112-01 0	3036-1112-010	-	-

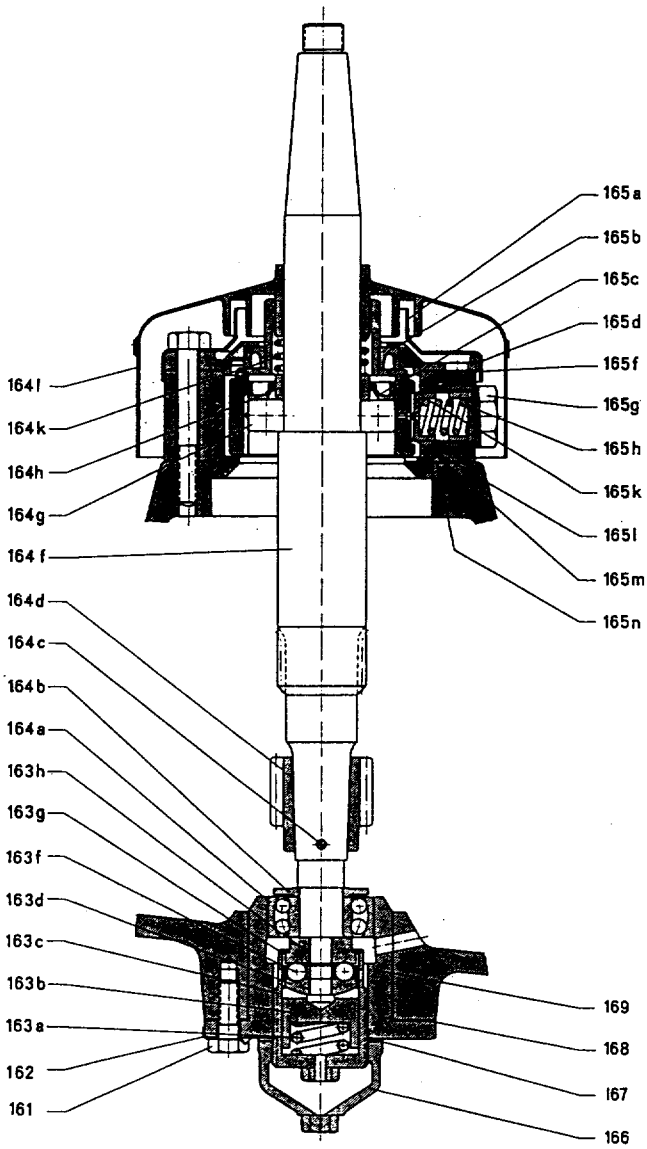

Fig. 7a

(Bottom bearing housing fastened with screws)

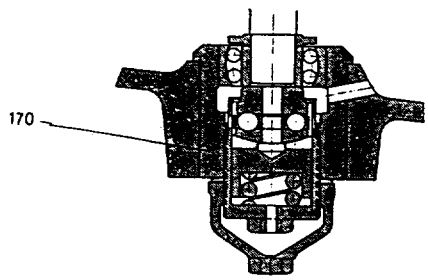

Fig. 7b

(Bottom bearing housing pressed-in)

Vertical Gear Parts with Gas-tight Neck Bearing, KG 2006 - KG 10006 (for 1430 rpm of Motor)

(For gear parts for 1720 rpm of Motor: see page 46)

List of Parts shown in Figures 7a and 7b

Item No.	Part Description	Number of Pieces	Part-No. KG 2006	KG 4006	KG 8006		KG 10006
-	*** Gear assembly	1	3033-3300-110	3036-3300-21 0	3036-3300-25 0		3037-3300-080
161	Hexagon screw M 10x25 DIN 933-5D kad.	4	0019-6935-090	-			-
161	Hexagon screw M 12x35 DIN 931-5D kad.	4	-	0019-6533-09 0	0019-6533-09 0		-
162	Safety washer	4	-	0026-5892-60 0	0026-5892-60 0		-
-	Lock washer	4	0026-1337-170	-	-		-
-	Bottom bearing assembly (163a-h)	1	00 10-3000-000	00 10-4200-01 0	0010-4200-01 0		0010-5800-000
163a	Helical spring	1	0006-4209-160	0006-4272-16 0	0006-4272-16 0		00 06-4272-160
163b	Bottom bearing pressure piece	1	0010-3001-200	0010-4201-20 0	0010-4201-20 0		0010-5801-200
163c	Bottom bearing threaded piece	1	0010-3002-00 0	0010-4202-00 0	0010-4202-00 0		0010-5802-100
-	Set of bottom bearing running parts (163d,f,h)	1	0010-3010-000	0010-4210-00 0	0010-4210-00 0		0010-5810-000
163d	** Bottom bearing pressure disc	1	-	-	-		-
163f	** Ball cage	1	-	-	-		-
163g	Expansion ring	1	0026-1473-170	0026-1482-17 0	0026-1482-170		0026-1486-170
163h	** Bottom bearing running disc	1	-	-	-		-
-	*** Worm spindle assembly (164a-l)	1	3033-3429-040	3036-3429-11 0	3036-3429-040		3037-3429-050
164a	Pendulum ball bearing 1303M/P 62	1	0011-1303-030	-	-		
164a	Pendulum ball bearing 2305M/P 62	1	-	0011-2305-030	0011-2305-030		0011-2305-030
164b	Ball bearing locking ring	1	0008-1708-000	0008-2508-000	0008-2508-000		0008-2508-000
164c	Notched pin	1	-	0026-1567-120	0026-1567-120		0026-1567-120
-	*** Worm spindle	1	3033-3420-010	-	-		-
164d	*** Worm	1		3036-3423-030	3036-3423-040		3037-3423-020

** This part cannot be supplied separately, but only assembled with parts 163d, f, h.

*** For 1430 rpm of motor only, and for the bowl speed stated on page 54 and 55.
For reduced bowl speed be sure to refer to Sect. 3.4 .

Vertical Gear Parts with Gas-tight Neck Bearing, KG 2006 - KG 10006 (for 1430 rpm of Motor)

(For gear parts for 1720 rpm of Motor: see page 46)

List of Parts shown in Figures 7a and 7b

Item No.	Part Description	Number of Pieces	Part-No. KG 2006	KG 4006	KG 8006		KG 10006
164f	Spindle	1	-	3036-3410-00 0	3036-3410-00 0		3037-3410-03 0
164g	Ball bearing 6207/P 62	1	0011-6207-010	-	-		-
164g	Ball bearing 6209/P 62	1	-	0011-6209-01 0	0011-6209-01 0		-
164g	Ball bearing 6210/P 62	1	-	-	-		0011-6210-01 0
164h	Pressure ring	1	0008-3521-050	0008-4521-00 0	0008-4521-00 0		0008-5021-00 0
164k	Spindle spring	1	0006-4226-160	0006-4231-16 0	0006-4231-16 0		0006-4307-160
1641	Spindle cap	1	0008-3551-070	0008-4551-50 0	0008-4501-50 0		0008-5001-02 0
-	Neck bearing bridge with covering, complete (165a-n)	1	0008-3520-200	0008-4520-23 0	0008-4520-23 0		0008-5020-200
165a	Protecting shield	1	0008-3503-080	0008-4503-00 0	0008-4503-00 0		0008-5003-080
165b	Cuff	1	0004-5736-840	0004-5740-84 0	0004-5740-84 0		0004-5741-840
165c	Sealing ring	1	0004-5551-750	0004-5562-75 0	0004-5562-75 0		0004-5556-750
-	Distance ring	1	0008-3512-000	-	-		0008-5022-00 0
165d	Protecting cap	1	0008-3502-080	0008-4502-20 0	0008-4502-20 0		0008-5002-200
165f	Gasket 110/162 mm dia. (covering)	1	0004-5002-770	-	-		-
165f	Gasket 115/182 mm dia. (covering)	1	-	0004-5016-77 0	0004-5016-77 0		-
165f	Gasket 125/208 mm dia. (covering)	1	-	-	-		0004-5192-770
-	Neck bearing bridge assembly (165g-m)	1	0008-3510-200	0008-4510-23 0	0008-4510-23 0		0008-5010-20 0
165g	Threaded nipple	6	0019-1420-030	0019-1423-03 0	0019-1423-03 0		0019-1426-150
165h	Set of neck bearing springs	1	0006-4373-060	0006-4306-06 0	0006-4306-060		0006-4240-06 0
165k	Spring pistons	6	0026-1286-110	0026-1289-11 0	0026-1289-11 0		0026-5724-13 0
1651	Pressure ring	1	0008-3511-090	0008-4507-00 0	00008-4507-00 0		0008-5007-000
165m	Neck bearing bridge	1	0008-3506-230	0008-4506-23 0	0008-4506-23 0		0008-5006-080
165n	Gasket 110/162 mm dia. (frame border)	1	0004-5002-770	-	-		-
165n	Gasket 129/182 mm dia. (frame border)	1	-	0004-5017-77 0	0004-5017-77 0		-
165n	Gasket 135/208 mm dia. (frame border)	1	-	-	-		0004-5014-770
166	Bottom bearing cap	1	0010-3003-200	0010-4203-20 0	0010-4203-20 0		0010-5803-200
167	Gasket	1	0004-1891-710	0004-5048-74 0	0004-5048-740		0004-5313-740
168	Gasket	1	0004-5254-770	0004-5252-77 0	0004-5252-77 0		-
169	Bottom bearing housing (fastened with screws)	1	3033-1112-010	3036-1112-01 0	3036-1112-01 0		-
170	Bottom bearing housing (pressed-in)	1	-	3036-1112-00 0	3036-1112-00 0		3037-1112-01 0
-	Threaded pin M 8x15 DIN 553-4D	1	-	0019-5053-00 0	0019-5053-00 0		0019-5053-00 0

Horizontal Gear Parts KG 2006 - KG 10006 (for 1430 rpm of Motor)

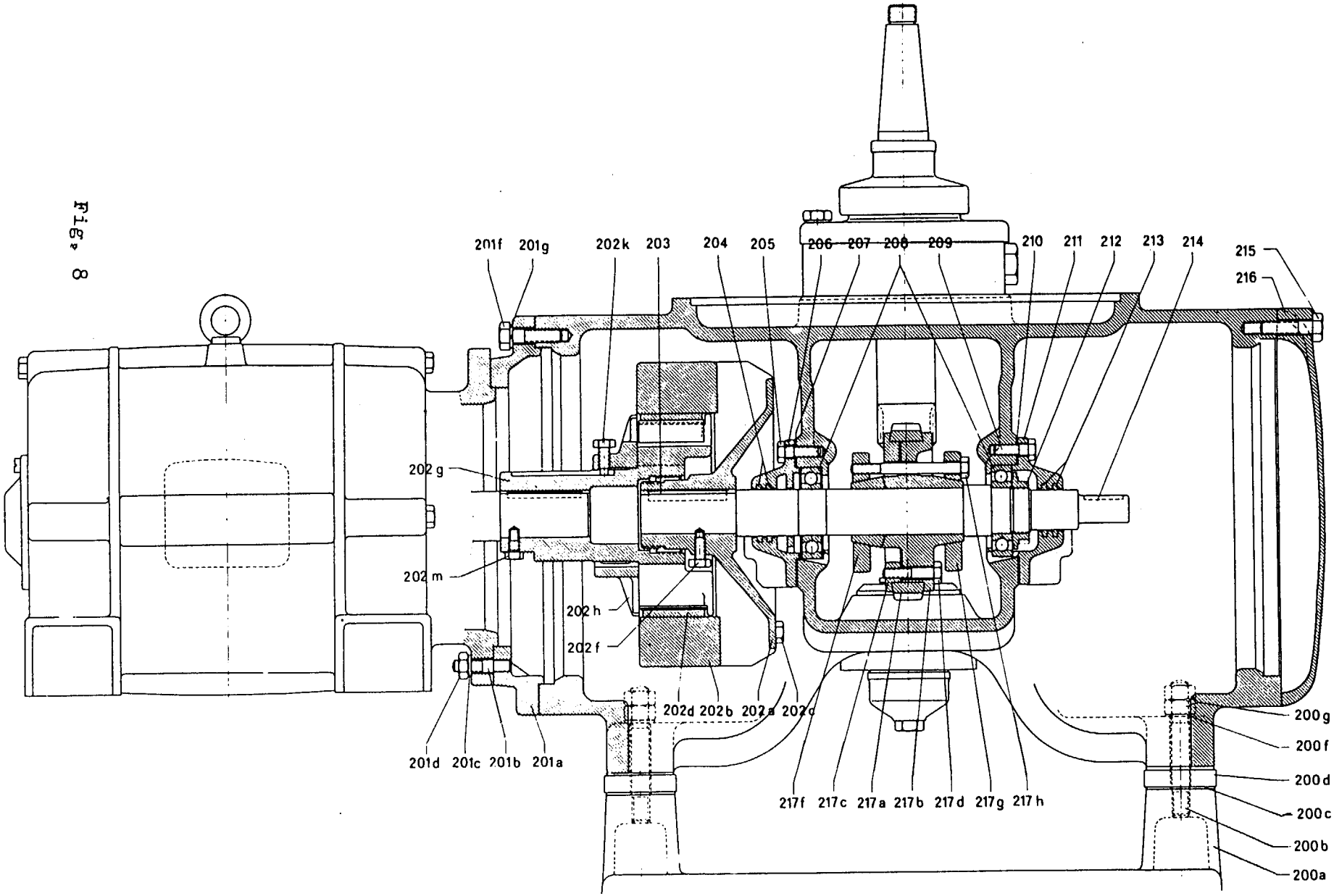

Fig. 8

Horizontal Gear Parts KG 2006 - KG 10006 (for 1430 rpm of Motor)

(For gear parts for 1720 rpm of motor: see page 46)

List of Parts shown in Fig. 8

Item No.	Part Description	Number of Pieces	Part-No. KG 2006	KG 4006	KG 8006	KG 9006	KG 10006
-	Foundation frame assembly (200a-g)	1	3033-1020-010	3036-1020-02 0	3036-1020-02 0	3037-1020-010	3037-1020-010
200a	Foundation frame	1	3033-1003-010	3036-1003-02 0	3036-1003-02 0	3037-1003-010	3037-1003-010
200b	Stud M 12x75 DIN 939-5D kad.	4	0019-7676-090	-	-	-	-
200b	Stud M 16x100 DIN 939-5D kad.	4	-	0019-7738-09 0	0019-7738-09 0	0019-7738-090	0019-7738-090
200c	Rubber cushion	4	0021-3014-750	0021-3015-75 0	0021-3015-75 0	0021-3015-750	0021-3015-750
200d	Ring for rubber cushion	4	0026-0153-300	0026-0150-30 0	0026-0150-30 0	0026-0150-300	0026-0150-300
200f	Washer	4	0026-1371-000	0026-1374-63 0	0026-1374-63 0	0026-1374-630	0026-1374-630
200g	Nut M 12 DIN 934-4D kad.	8	0013-0280-030	-	-	-	-
200g	Nut M 16 DIN 934-4D kad.	8	-	0013-0282-03 0	0013-0282-03 0	0013-0282-030	0013-0282-030
-	Intermediate flange assembly (201a-g) (depending on motor)	1	3033-1021-L	3036-1021-L	3036-1021-L	3037-1021-L	3037-1021-L
201a	Intermediate flange	1	3033-1028-L	3036-1028-L	3036-1028-L	3037-1028-L	3037-1028-L
201b	Stud M 12x35 DIN 939-5D kad.	4	0019-7668-090	-	-	-	-
201b	Stud M 12x40 DIN 939-5D kad.	4	-	0019-7669-090	0019-7669-090	0019-7669-090	0019-7669-090
201c	Lock washer	4	0026-1328-170	00 26-1328-170	0026-1328-170	0026-1328-170	0026-1328-170
201d	Hexagon nut M 12 DIN 934-5D Kupr. verchr.	4	0013-0280-550	0013-0280-550	0013-0280-550	0013-0280-550	0013-0280-550
201f	Hexagon screw M 12x30 DIN 931-5D Kupr. verchr.	4	0019-6532-550	-	-	-	-
201f	Hexagon screw M 12x45 DIN 931-5D Kupr. verchr.	4	-	0019-6535-550	0019-6535-550	-	-
201f	Hexagon screw M 16x55 DIN 931-5D Kupr. verchr.	4	-	-	-	0019-6607-550	0019-6607-550
201g	Lock washer	4	0026-1328-170	0026-1328-170	0026-1328-170	-	-
201g	Lock washer	4	-	-	-	0026-1330-170	00 26-1330-170

Horizontal Gear Parts KG 2006 - KG 10006 (for 1430 rpm of Motor)

(For gear parts for 1720 rpm of motor: see page 46)

List of Parts shown in Fig. 8

Item No.	Part Description	Number of Pieces	Part-No. KG 2006	KG 4006	KG 8006	KG 9006	KG 10006
-	Centrifugal clutch assembly (202a-m)	1	3033-3385-000	3037-3385-00 0	3037-3385-00 0	3037-3385-000	3037-3385-000
202a	Clutch pulley	1	3033-3365-000	3037-3365-00 0	3037-3365-00 0	3037-2265-000	3037-3365-000
202b	Ring for clutch pulley	1	3033-3366-000	3037-3366-00 0	3037-3366-00 0	3037-3366-000	3037-3366-000
202c	Hexagon screw M 10x50 DIN 931-8G kad.	4	0019-6514-150	-	-	-	-
202c	Hexagon screw M 10x75 DIN 931-8G kad.	4	-	0019-6519-15 0	0019-6519-15 0	0019-6519-150	0019-6519-150
202d	Clutch shoe	6	3033-3397-00 0	3313-3397-00 0	3313-3397-00 0	3313-3397-000	3313-3397-000
202f	Hexagon screw with pin AM 10x20 DIN 561-4D kad.	1	0019-5194-030	-	-	-	-
202f	Hexagon screw with pin AM 10x25 DIN 561-4D kad.	1	-	0019-5195-03 0	0019-5195-03 0	0019-5195-030	0019-5195-030
202g	Clutch driver (depending on motor)	1	3033-3468-L	3037-3468-L	3037-3468-L	3037-3468-L	3037-3468-L
202h	Clutch cover	1	3033-3479-00 0	3037-3479-01 0	3037-3479-010	3037-3479-010	3037-3479-010
202k	Hexagon screw AM 10x20 DIN 561-4D kad.	1	0019-5194-030	-	-	-	-
202k	Hexagon screw AM 10x25 DIN 561-4D kad.	1	-	0019-5195-03 0	0019-5195-03 0	0019-5195-030	0019-5195-030
202m	Hexagon screw with pin (for clutch driver)	1	0019-5195-03 0	0019-0167-03 0	0019-0167-03 0	0019-0167-030	0019-0167-030
203	Key	1	0026-1743-16 0	-	-	-	-
203	Key	2	-	0026-1765-16 0	0026-1765-160	0026-1765-160	0026-1765-160
204	Felt ring	2	0004-1945-830	0004-1953-83 0	0004-1953-830	0004-1953-830	0004-1953-830
205	Hexagon screw, slotted M 8x22 - 4D kad.	3	0019-0717-03 0	-	-	-	-
205	Hexagon screw M 10x25 DIN 933-5D kad.	3	-	0019-6935-09 0	0019-6935-090	0019-6935-090	0019-6935-090
206	Bearing cover	1	3033-3376-00 0	0824-3125-01 0	0824-3125-010	0824-3125-010	0824-3125-010

Horizontal Gear Parts KG 2006 - KG 10006 (for 1430 rpm of Motor)

(For gear parts for 1720 rpm of motor: see page 46)

List of Parts shown in Fig. 8

Item No.	Part Description	Number of Pieces	Part-No. KG 2006	KG 4006	KG 8006	KG 9006	KG 10006
207	Gasket	1	0004-5353-700	0004-5222-700	0004-5222-70 0	0004-5222-70 0	0004-5222-700
208	Ball bearing 6206	2	0011-6206-000	-	-	-	-
208	Ball bearing 6208	2	-	0011-6208-000	0011-6208-00 0	0011-6208-00 0	0011-6208-000
209	Hexagon screw, slotted M 8x22-4D kad.	3	0019-0717-030	-	-	-	-
209	Hexagon screw M 10x25 DIN 933-5D kad.	3	-	0019-6935-090	0019-6935-09 0	0019-6935-09 0	0019-6935-090
210	Gasket	1	0004-5353-700	0004-5222-700	0004-5222-700	0004-5222-700	0004-5222-700
211	Bearing cover	1	3033-3375-000	3037-3375-000	3037-3375-00 0	3037-3375-00 0	3037-3375-000
212	Nut	1	3033-3308-000	3037-3308-000	3037-3308-00 0	3037-3308-00 0	3037-3308-000
213	Felt ring	2	0004-1943-830	0004-1950-830	0004-1950-83 0	0004-1950-83 0	0004-1950-830
214	Worm wheel shaft	1	3033-3400-000	3037-3400-010	3037-3400-01 0	3037-3400-01 0	3037-3400-010
215	Hexagon screw M 12x30 DIN 931-5D Kupr. verchr.	2	0019-6532-550	-	-	-	-
215	Hexagon screw M 12x45 DIN 931-5D Kupr. verchr.	2	-	0019-6535-550	0019-6535-55 0	-	-
215	Hexagon screw M 16x55 DIN 931-5D Kupr. verchr.	2	-	-	-	0019-6607-55 0	0019-6607-550
216	Protecting cap	1	3033-1066-000	3036-1066-000	3036-1066-00 0	3037-1066-01 0	3037-1066-010
-	***Worm wheel assembly with clamp plates (217a-h)	1	3033-3449-01 0	3036-3449-030	3036-3449-04 0	3043-3449-01 0	3037-3449-020
-	***Worm wheel assembly (217a-d)	1	3033-3440-010	3036-3440-030	3036-3440-04 0	3043-3440-01 0	3037-3440-020
217a	***Toothed rim	1	3033-3443-019 0	3036-3443-039	3036-3443-049	3043-3443-019	3037-3443-029
217b	Worm wheel body	1	3033-3445-000	3036-3445-000	3036-3445-000	3037-3445-020	3037-3445-020
217c	Pressure ring	1	3033-3442-000	3036-3442-000	3036-3442-000	3037-3442-020	3037-3442-020

***For 1430 rpm of motor only, and for the bowl speed stated on page 54 and 55.
For reduced bowl speed be sure to refer to Sect. 3.4.

Horizontal Gear Parts KG 2006 - KG 10006 (for 1430 rpm of Motor)

(For gear parts for 1720 rpm of motor: see page 46)

List of Parts shown in Fig.8

Item No.	Part Description	Number of Pieces	Part-No. KG 2006	KG 4006	KG 8006	KG 9006	KG 10006
217d	Hexagon screw M 8x35 DIN 931-5D kad.	4	0019-6493-090	-	-	-	-
217d	Hexagon screw M 10x45 DIN 931-5D kad.	4	-	0019-6513-090	0019-6513-090	0019-6513-090	0019-6513-090
217f	Clamp plate (threaded)	1	3033-3447-000	3037-3447-010	3037-3447-010	3037-3447-010	3037-3447-010
217g	Clamp plate (without thread)	1	3033-3446-000	3037-3446-010	3037-3446-010	3037-3446-010	3037-3446-010
217h	Hexagon screw M 8x75 DIN 931-5D kad.	4	0019-6501-090	-	-	-	-
217h	Hexagon screw M 10x100 DIN 931-5D kad.	4	-	0019-6524-090	0019-6524-090	0019-6524-090	0019-6524-090

Vertical and Horizontal Gear Parts KG 2006 - KG 10006 (for 1720 rpm of motor)

All gear parts are identical with those of the corresponding gear for 1430 rpm of motor, except for the parts as listed below. ***

(For gear parts for 1430 rpm of motor: see page 35-45)

List of Parts shown in Figures 6-8

Item No.	Fig.	Part Description	Number of Pieces	Part-No. KG 2006	KG 4006	KG 8006	KG 9006	KG 10006
-	-	Gear assembly	1	3033-3300-000	3036-3300-000	3036-3300-260	3037-3300-020	3037-3300-030
-	6a	Worm spindle assembly	1	3033-3429-000	3036-3429-000	3036-3429-150	3037-3429-020	3037-3429-030
-	6a	Worm spindle	1	3033-3420-000	-	-	-	-
152d	6a	Worm	1	-	3036-3423-000	3036-3423-130	3037-3423-020	3037-3423-030
-	8	Worm wheel assembly with clamp plates	1	3033-3449-000	3036-3449-000	3036-3449-130	3037-3449-020	3037-3449-030
-	8	Worm wheel assembly	1	3033-3440-000	3036-3440-000	3036-3440-130	3037-3440-020	3037-3440-030
217a	8	Toothed rim	1	3033-3443-009	3036-3443-009	3036-3443-139	3037-3443-029	3037-3443-039
		Gas-tight design						
-	-	Gear assembly	1	-	3036-3300-190	3036-3300-270	-	3037-3300-110
-	7a	Worm spindle assembly	1	-	3036-3429-070	3036-3429-160	-	3037-3429-060
164d	7a	Worm	1	-	3036-3423-000	3036-3423-130	-	3037-3423-030
-	8	Worm wheel assembly with clamp plates	1	-	3036-3449-000	3036-3449-130	-	3037-3449-030
-	8	Worm wheel assembly	1	-	3036-3440-000	3036-3440-130	-	3037-3440-030
217a	8	Toothed rim	1	-	3036-3443-009	3036-3443-139	-	3037-3443-039

*** All parts listed on this page are valid for 1720 rpm of motor only, and for a bowl speed as stated on page 54 and 55.

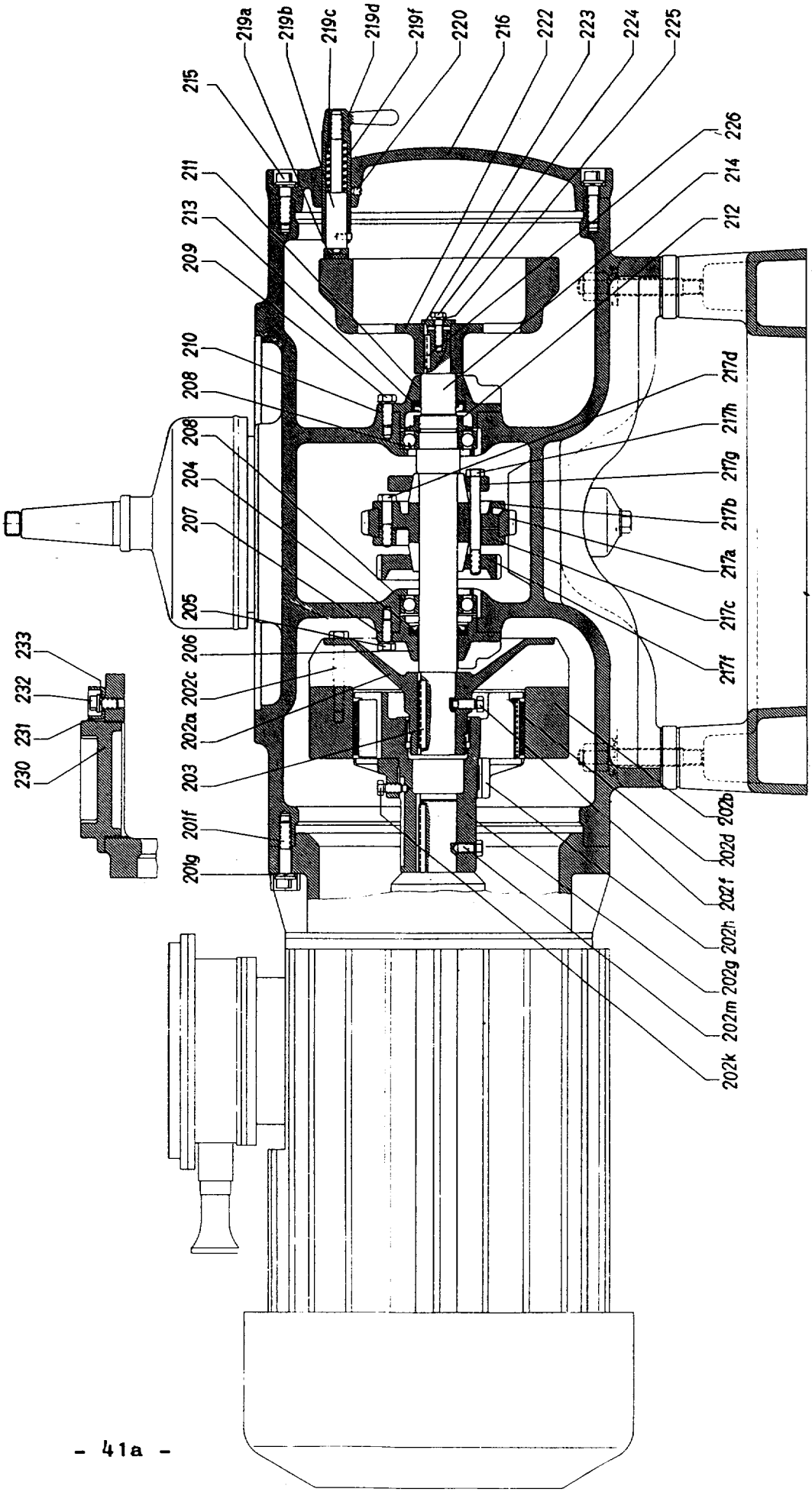
219a
219b
219c
219d
219f
220
216
222
223
224
225
215
226
211
214
213
212
209
210
217d
208
217h
208
217g
204
217b
207
217a
205
217c
233
206
217f
232
202c
231
202a
230
203
202b
201f
202d
201g
202f
202h
202g
202m
202k

Fig. 8a

Horizontal Gear Parts KG 2006 - KG 10006 (for 1430 rpm of Motor)

(For gear parts for 1720 rpm of motor: see page 45a)

List of Parts shown in Fig. 8a

Item No.	Part Description	Number of Pieces	Part-No. KG 2006	KG 4006	KG 8006	KG 10000
-	Separator, complete	1	3034-0015-	3035-0012-	3036-0017-	3037-0022-
-	Frame assembly	1	3034-1100-050	3035-1100-040	2219-1100-010	3037-1100-070
-	Gear assembly	1	3033-3300-190	2219-3300-050	2219-3300-050	3037-3300-510
201f	Triangular head screw (depending an motor)	4				
201g	Lock washer (depending an motor)	4				
-	Intermediate flange (depending an motor)	1				
-	Centrifugal clutch assembly (202a-m)	1	3033-3385-010	3037-3385-010	3037-3385-010	3037-3385-010
202a	Clutch pulley	1	3033-3365-000	3037-3365-000	3037-3365-000	3037-3365-000
202b	Ring	1	3033-3366-000	3037-3366-000	3037-3366-000	3037-3366-000
202c	Hexagon screw M10x50 DIN 931-8G kad.	4	0019-6514-150	-	-	-
	M10x75 DIN 931-8G kad.	4	-	0019-6519-150	0019-6519-150	0019-6519-150
202d	Clutch shoe	6	3033-3397-010	3313-3397-010	3313-3397-010	3313-3397-010
202f	Hexagon screw M10x20 DIN 561-4D kad.	1	0019-5194-030	-	-	-
	M10x25 DIN 561-4D kad.	1	-	0019-5195-030	0019-5195-030	0019-5195-030
202g	Clutch driver	1	3033-3468-L	3033-3468-L	3033-3468-L	3033-3468-L
202h	Clutch cover	1	3033-3479-000	3037-3479-010	3037-3479-010	3037-3479-010
202k	Hexagon screw AM10x25 DIN 561-4D kad.	1	0019-5195-030	0019-5195-030	0019-5195-030	0019-5195-030
202m	Hexagon screw AM 10x20	1	0019-5194-030	0019-0167-030	0019-0167-030	0019-0167-030
203	Key	1	0026-1743-160	-	-	-
203	Key	1	-	0026-1765-160	0026-1765-160	0026-1765-160
204	Sealing ring	1	0004-5569-760	-	-	-
204	Sealing ring	1	-	0004-5548-760	0004-5548-760	0004-5548-760
205	Hexagon screw M8x22	3	0019-0717-030	-	-	-
	M8x25 DIN 933-5D kad.	3	-	0019-6935-090	0019-6935-090	0019-6935-090
206	Bearing cover	1	3033-3375-030	3163-3375-010	3163-3375-010	3163-3375-010
207	Gasket	1	0004-2480-770	0004-2500-770	0004-2500-770	0004-2500-770
208	Grooved ball bearing 6206	2	0011-6206-000	-	-	-
208	Grooved ball bearing 6208	2	-	0011-6208-000	0011-6208-000	0011-6208-000

Horizontal Gear Parts KG 2006 - KG 10006 (for 1430 rpm of Motor)

(For gear Parts for 1720 rpm of motor: see page 45a)

List of Parts shown in Fig. 8a

Item. No.	Part Description	Number of Pieces	Part-No. KG 2006	KG 4006	KG 8006	KG 10006
209	Hexagon crew M8x22	3	0019-0717-030	-	-	-
	M8x25 DIN 933-5D kad.	3	-	0019-6935-090	0019-6935-090	0019-6935-090
210	Gasket	1	0004-2480-770	0004-2500-770	0004-2500-770	0004-2500-770
211	Bearing cover	1	3033-3375-020	3163-3375-020	3163-3375-020	2256-3375-000
212	Nut	1	0013-3011-060	0013-3137-060	0013-3137-060	0013-3137-060
213	Sealing ring	1	0004-5542-760	-	-	-
213	Sealing ring	1	-	0004-5546-760	0004-5546-760	0004-5546-760
214	Worm wheel shaft	1	3033-3400-010	3037-3400-020	3037-3400-020	-
215	Triangular head screw					
	AM12x30 DIN 22424-5D kad.	4	0019-8619-100	-	-	-
	AM12x35 DIN 22424-5D kad.	4	-	-	0019-8620-100	-
	AM12x40 DIN 22424-5D kad.	4	-	0019-8621-100	-	-
	AM16x45 DIN 22424-5D kad.	4	-	-	-	0019-8642-100
216	Protecting cap	1	3033-1066-010	3163-1066-010	3163-1066-010	3037-1066-040
-	Lock washer	4	0026-1328-170	0026-1328-170	0026-1328-170	0026-1330-170
-	*** Worm wheel assembly with clamp plates (217a-h)	1	3033-3449-010	3107-3449-000	3107-3449-000	3037-3449-020
-	*** Worm wheel assembly (217a-d)	1	3033-3440-010	3036-3440-040	3036-3440-040	3037-3440-020
217a	*** Toothed rim	1	3033-3443-019	3036-3443-049	3036-3443-049	3037-3443-020
217b	Worm wheel body	1	3033-3445-000	3036-3445-000	3036-3445-000	3037-3445-020
217c	Pressure ring	1	3033-3442-000	3036-3442-000	3036-3442-000	3036-3442-020
217d	Hexagon screw M8x35 DIN 931-5D kad.	4	0019-6493-090	-	-	-
	M8x45 DIN 931-8G kad.	4	-	0019-6513-150	0019-6513-150	0019-6513-150
217f	Clamp plate (threaded)	1	3033-3447-000	3117-3447-000	3117-3447-000	3037-3447-010
217g	Clamp plate (without thread)	1	3033-3446-000	3037-3446-010	3037-3446-010	3037-3446-010
217h	Hexagon screw M8x75 DIN 931-5D kad.	1	0019-6501-090	-	-	-
	M10x100 DIN 931-8G kad.	1	-	0019-6524-150	0019-6524-150	0019-6524-150

***For 1430 rpm of motor only, and for the bowl speed stated on page 54 and 55.
In case of reduced bowl speed be sure to refer to sect. 3.4.

Horizontal Gear Parts KG 2006 - KG 10006 (for 1430 rpm of Motor)

(For gear parts for 1720 rpm of motor: see page 45a)

List of Parts shown in Fig. 8a

Item No.	Part Description	Number of Pieces	Part-No. KG 2006	KG 4006	KG 8006	KG 10006
-	Brake assembly (219a-f)	1	1073-1043-010	-	-	-
-	Brake assembly (291a-f)	2	-	1073-1043-020	1073-1043-020	3320-1043-010
219a	Brake lining	1	0021-4100-860	0021-4100-880	0021-4100-880	0021-4101-880
-	Countersunk rivet	2	0026-1262-550	-	-	-
-	Countersunk rivet	4	-	0026-1262-550	0026-1262-550	0026-1262-550
219b	Brake bolt assembly	1	1073-1031-000	1073-1031-020	1073-1031-020	3320-1031-020
219c	Cylindrical pressure spring	1	0006-4338-160	0006-4337-160	0006-4337-160	0006-4337-160
219d	Handle	1	0021-3515-300	0021-3515-690	0021-3515-690	0021-3515-690
219f	Brake housing	1	0021-3544-300	0021-3544-300	0021-3544-300	0021-3544-640
220	Threaded pin M8x15 DIN 553-5S	1	0019-5053-060	-	-	-
	M8x10	2	-	0019-5050-000	0019-5050-000	0019-3973-060
222	Brake drum	1	3033-3371-000	3163-3371-000	3163-3371-000	3320-3368-000
223	Disc	1	0026-1650-000	0026-1656-000	0026-1656-000	0026-1658-010
224	Hexagon screw M8x30 DIN 931-5D kad.	1	0019-6492-090	0019-6492-090	0019-6492-090	0019-6492-090
225	Lock washer	1	0026-1325-170	0026-1325-170	0026-1325-170	-
-	Tab washer	1	-	-	-	0026-5890-600
226	Key	1	0026-1744-160	0026-1744-160	0026-1744-160	0026-1744-160
230	Cover	1	3037-1085-020	3037-1079-000	3037-1085-020	3037-1085-020
231	Protective collar	1	0026-2280-300	0026-2280-300	0026-2280-300	0026-2280-300
232	Triangular head screw	1	0019-8594-100	0019-8594-100	0019-8594-100	0019-8594-100
233	Lock washer	1	0026-1337-170	0026-1337-170	0026-1337-170	0026-1337-170

Vertical and Horizontal Gear Parts KG 2006 - KG 10006 (for 1720 rpm of motor)

All gear parts are identical with those of the corresponding gear for 1430 rpm of motor, except for the parts as listed below. ***

(For gear parts for 1430 rpm of motor: see page 35-44a)

List of Parts shown in Figures 7a-8a

Item No.	Fig.	Part Description	Number of Pieces	Part-No. KG 2006	KG 4006	KG 8006	KG 10006
-		Separator, complete	1	3034-0014	3535-0015	-	-
-		Gear assembly	1	3033-3300-180	2219-3300-040	2219-3300-040	3037-3300-520
-	7a	Worm spindle assembly	1	3033-3429-000	3036-3429-160	3036-3429-160	3037-3429-030
-	7a	Worm spindle	1	3033-3420-000	-	-	-
164d	7a	Worm	1	-	3036-3423-130	3036-3423-130	3037-3423-030
-	8a	Worm wheel assembly with clamp plates	1	3033-3449-000	3107-3449-010	3107-3449-010	3037-3449-030
-	8a	Worm wheel assembly	1	3033-3440-000	3036-3440-130	3036-3440-130	3037-3440-030
217a	8a	Toothed rim	1	3033-3443-009	3036-3443-130	3036-3443-130	3037-3443-030

*** All parts listed on this page are valid only for 1720 rpm of the motor, and for a bowl speed as stated on page 54 and 55.

In case of reduced bowl speed be sure to refer to Sect. 3.4.

Six-Chamber Bowl KG 2006 - KG 10006

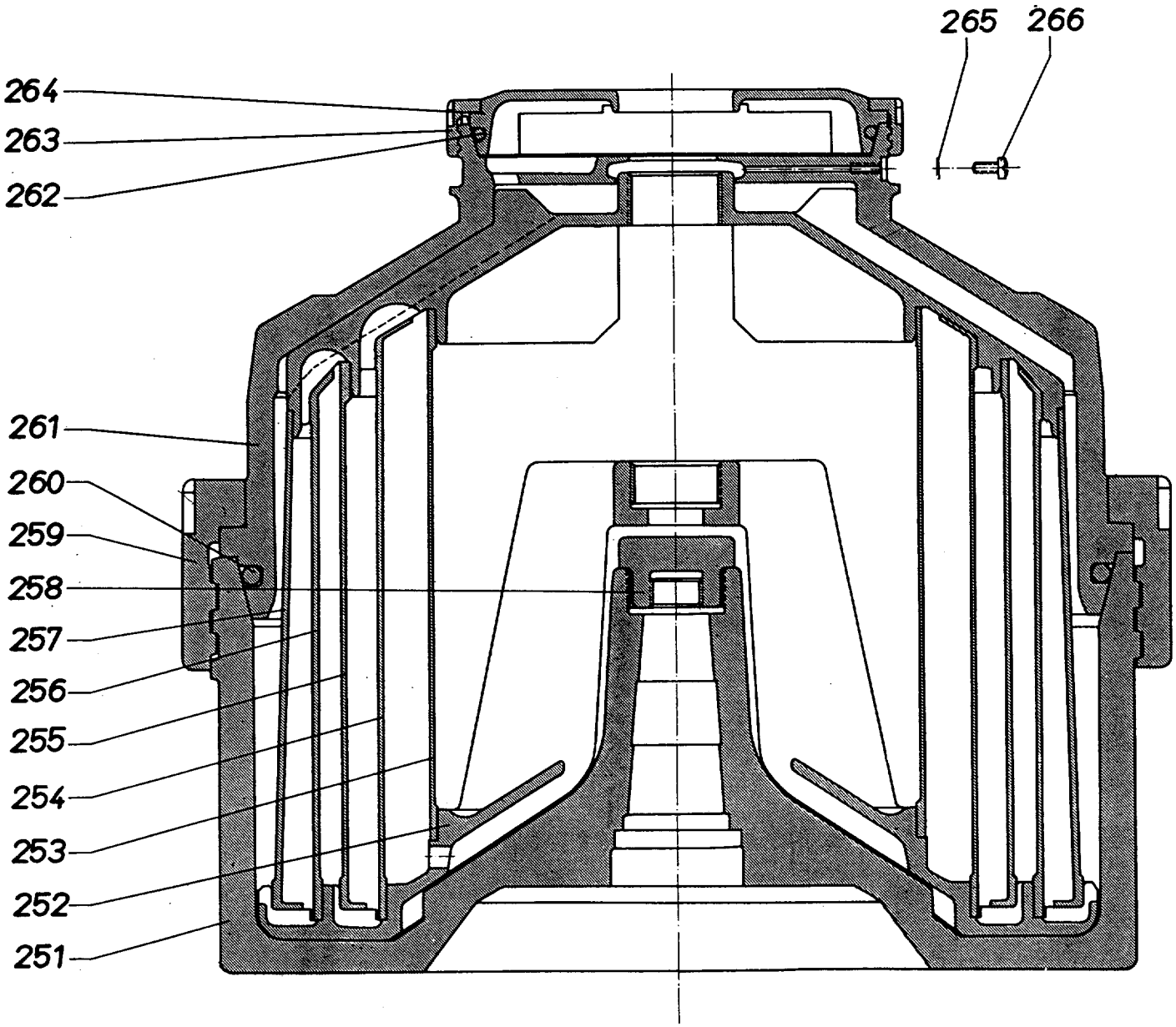

Fig. 9

Six-Chamber Bowl KG 2006 - KG 10006

List of Parts shown in Fig.9

Item No.	Part Description	Number of Pieces	Part-No. KG 2006	KG 4006	KG 8006	KG 9006	KG 10006
-	Bowl assembly	1	3034-6600-L	3035-6600-L	3036-6600-L	3043-6600-L	3037-6600-L
251	* Lower bowl part	1	3034-6604-L	3035-6604-L	3036-6604-L	3043-6604-L	3037-6604-L
252	* Wing insert	1	3034-6680-L	3035-6680-L	3036-6680-L	3043-6680-L	3037-6680-L
253	* Cylindrical insert I	1	3034-6530-L	3035-6530-L	3036-6530-L	3043-6530-L	3037-6530-L
254	* Cylindrical insert II	1	3034-6540-L	3035-6540-L	3036-6540-L	3043-6540-L	3037-6540-L
255	* Cylindrical insert III	1	3034-6550-L	3035-6550-L	3036-6550-L	3043-6550-L	3037-6550-L
256	* Cylindrical insert IV	1	3034-6560-L	3035-6560-L	3036-6560-L	3043-6560-L	3037-6560-L
257	* Bell-shaped insert	1	3034-6520-L	3035-6520-L	3036-6520-L	3043-6520-L	3037-6520-L
258	Spindle nut	1	0013-2952-L	0013-2958-L	0013-2958-L	0013-3156-L	0013-3156-L
259	* Bowl locking ring	1	3034-6631-000	3035-6631-000	3036-6631-000	3043-6631-000	3037-6631-000
260	Gasket	1	0007-2088-L	0007-2041-L	0007-2187-L	0007-2192-L	0007-2201-L
261	* Upper bowl part	1	3034-6610-L	3035-6610-L	3036-6610-L	3043-6610-L	3037-6610-L
262	Gasket	1	0007-2062-L	0007-2063-L	0007-2023-L	0007-2023-L	0007-2065-L
263	Centripetal pump chamber lock ring	1	3034-6647-000	3035-6647-00 0	3036-6647-000	3036-6647-000	3037-6647-000
264	Centripetal pump chamber cover	1	3034-6642-L	3035-6642-L	3036-6642-L	3036-6642-L	0990-6642-L
265	Gasket	2	0004-1921-720	0004-1921-720	0004-1921-720	0004-1921-720	-
266	Lens head screw AM 5x12 DIN 85-4D kad.	2	0019-2493-030	0019-2493-030	0019-2493-030	0019-2493-030	-
266	Lens head screw AM 8x18 DIN 85-4D kad.	2	-	-	-	-	0019-2524-030

* This part can only be replaced by a WESTFALIA factory engineer or by a special repair shop authorized by WESTFALIA, because of special re-fitting to machine and possible re-balancing of bowl.

Two-Chamber Bowl KG 2006 - KG 10006

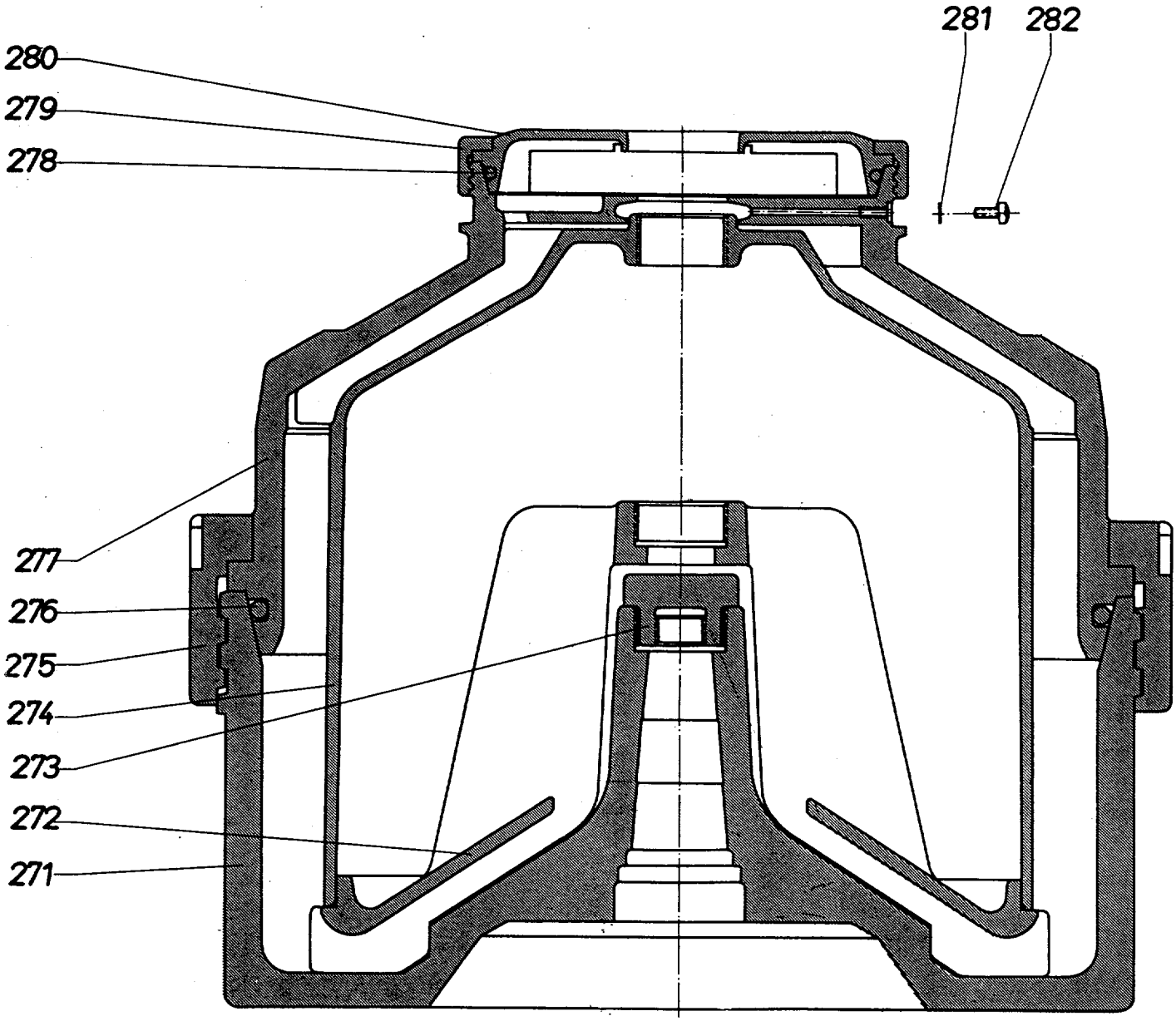

Fig. 10

Two-Chamber Bowl KG 2006 - KG 10006

List of Parts shown in Fig. 10

Item No.	Part Description	Number of Pieces	Part-No. KG 2006	KG 4006	KG 8006	KG 9006	KG 10006
-	Bowl assembly	1	3034-6600-L	3035-6600-L	3036-6600-L	3043-6600-L	3037-6600-L
271	* Lower bowl part	1	3034-6604-L	3035-6604-L	3036-6604-L	3043-6604-L	3037-6604-L
272	* Wing insert	1	3034-6680-L	3035-6680-L	3036-6680-L	3043-6680-L	3037-6680-L
273	Spindle nut	1	0013-2952-L	0013-2958-L	0013-2958-L	00 13-3156-L	0013-3156-L
274	* Bell-shaped insert	1	3034-6520-L	3035-6520-L	3036-6520-L	3043-6520-L	3037-6520-L
275	* Bowl locking ring	1	3034-6631-000	3035-6631-000	3036-6631-000	3043-6631-000	3037-6631-000
276	Gasket	1	0007-2088-L	0007-2041-L	0007-2187-L	0007-2192-L	0007-2201-L
277	* Upper bowl part	1	3034-6610-L	3035-6610-L	3036-6610-L	3043-6610-L	3037-6610-L
278	Gasket	1	0007-2062-L	0007-2063-L	0007-2023-L	0007-2023-L	0007-2065-L
279	Centripetal pump chamber lock ring	1	3034-6647-L	3035-6647-L	3036-6647-L	3036-6647-L	3037-6647-L
280	Centripetal pump chamber cover	1	3034-6642-L	3035-6642-L	3036-6642-L	3036-6642-L	3037-6642-L
281	Gasket	2	0004-1921-720	0004-1921-720	0004-1921-720	0004-1921-720	0004-1870-720
282	Lens head screw AM 5x12 DIN 85-4D kad.	2	0019-2493-030	0019-2493-030	0019-2493-030	0019-2493-030	-
282	Lens head screw AM 8x18 DIN 85-4D kad.	2	-	-	-	-	0019-2524-030

* This part can only be replaced by a WESTFALIA factory engineer or by a special repair shop authorized by WESTFALIA, because of special re-fitting to machine and possible re-balancing of bowl.

Tools and Accessories KG 2006 - KG 10006

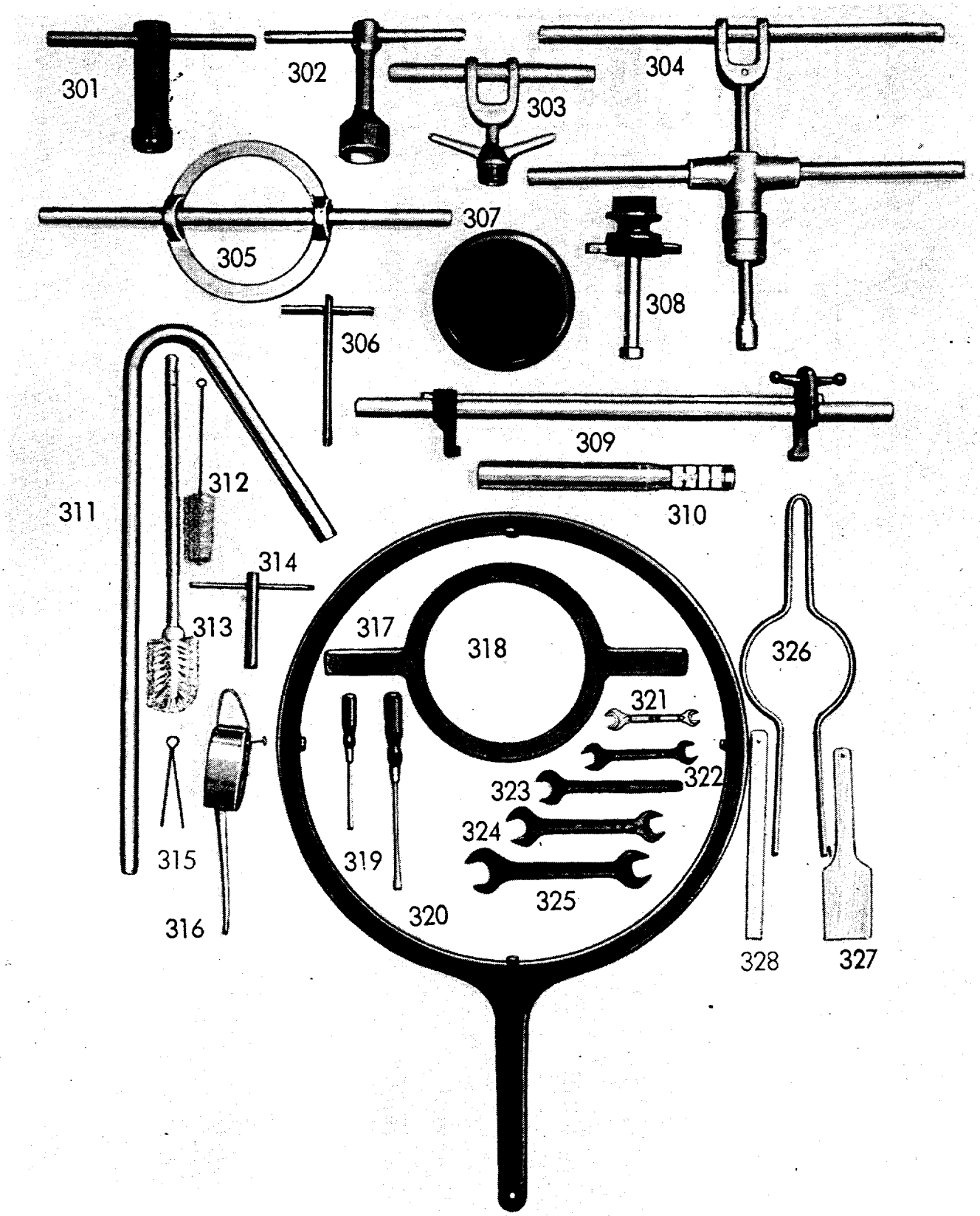

Fig. 11

Tools and Accessories KG 2006 - KG 10006

When unpacking, check with the packing list furnished with the separator.

List of Parts shown in Fig. 11

Item No.	Part Description	Number of Pieces	Part-No. KG 2006	KG 4006	KG 8006	KG 9006	KG 10006
301	Lifting device for wing insert	1	-	3036-9960-000	3036-9960-000	3036-9960-000	3037-9960-000
302	Socket wrench 46 mm	1	-	-	-	-	03-4173-030
303	Bowl lifting device	1	3034-9930-000	3037-9930-010	3037-9930-010	3037-9930-010	3037-9930-010
304	Lifting device for bell-shaped insert	1	3034-9970-000	3036-9970-000	3036-9970-000	3036-9970-000	3037-9970-000
305	Wrench for upper bowl part	1	-	3035-9850-000	3036-9850-000	3036-9850-000	3037-9850-000
306	Wrench for centripetal pump	1	0003-0125-000	0003-0126-000	0003-0126-000	0003-0126-000	0003-0122-000
307	Oil pan	1	0003-0274-000	0003-0274-000	00 03-0274-000	0003-0274-000	0003-0274-000
308	Puller for clutch	1	3033-9910-000	3313-9910-000	3313-9910-000	3313-9910-000	3313-9910-000
309	Lifting device (for six -chamber bowl only)	1	3034-9955-000	3036-9955-000	3036-9955-000	3037-9955-000	3037-9955-000
310	Mallet	1	0003-0200-000	0003-0200-000	0003-0200-000	0003-0200-000	0003-0200-000
311	Siphon	1	-	-	-	0919-9821-020	0919-9821-020
312	Tube brush	1	0003-4552-960	0003-4552-960	0003-4552-960	0003-4552-960	0003-4552-960
313	Brush for bowl parts	1	0003-4695-960	0003-4695-960	0003-4695-960	0003-4695-960	0003-4695-960
314	Socket wrench 14 mm	1	0003-4227-030	0003-4227-030	0003-4227-030	-	-
315	Lifting tongs for reducing tube	1	0954-9837-000	0954-9837-000	0954-9837-000	0954-9837-000	0954-9837-000
316	Pressure oil can	1	0003-0315-010	0003-0315-010	0003-0315-010	0003-0315-010	0003-0315-010
317	Bowl wrench	1	0003-4042-030	0003-4049-030	0003-4058-030	0003-4063-030	0003-4068-030
318	Wrench for centripetal pump chamber	1	0003-3990-000	0003-3998-000	0003-3999-000	0003-3999-000	0003-4004-000
319	Screw driver	1	0003-4636-050	0003-4636-050	0003-4636-050	0003-4636-050	0003-4636-050
320	Screw driver	1	0003-4637-050	0003-4637-050	0003-4637-050	0003-4637-050	0003-4637-050
321	Screw wrench 10x14	1	-	0003-4202-110	0003-4202-110	0003-4202-110	0003-4202-110
322	Screw wrench 17x19	1	0003-4205-110	0003-4205-110	0003-4205-110	0003-4205-110	0003-4205-110
323	Single screw wrench	1	-	0003-4222-110	0003-4222-110	0003-4223-110	0003-4219-110
324	Screw wrench 22x27	1	-	0003-4208-110	0003-4208-110	0003-4208-110	0003-4208-110
325	Screw wrench 27x32	1	0003-4211-110	-	-	-	-
326	Lifting tongs for upper bowl part	1	0003-3465-170	-	-	-	-
327	Large scraper	1	0003-0211-950	0003-0211-950	0003-0211-950	0003-0211-950	0003-0211-950
328	Small scraper	1	0003-0210-950	0003-0210-950	0003-0210-095	0003-0210-950	0003-0210-950
329	Wrench for sight glass	1	0003-4585-000	0003-4585-000	0003-4585-000	0003-4585-000	0003-4585-000

Installation Plan KG 2006 - KG 10006

(Open Feed)

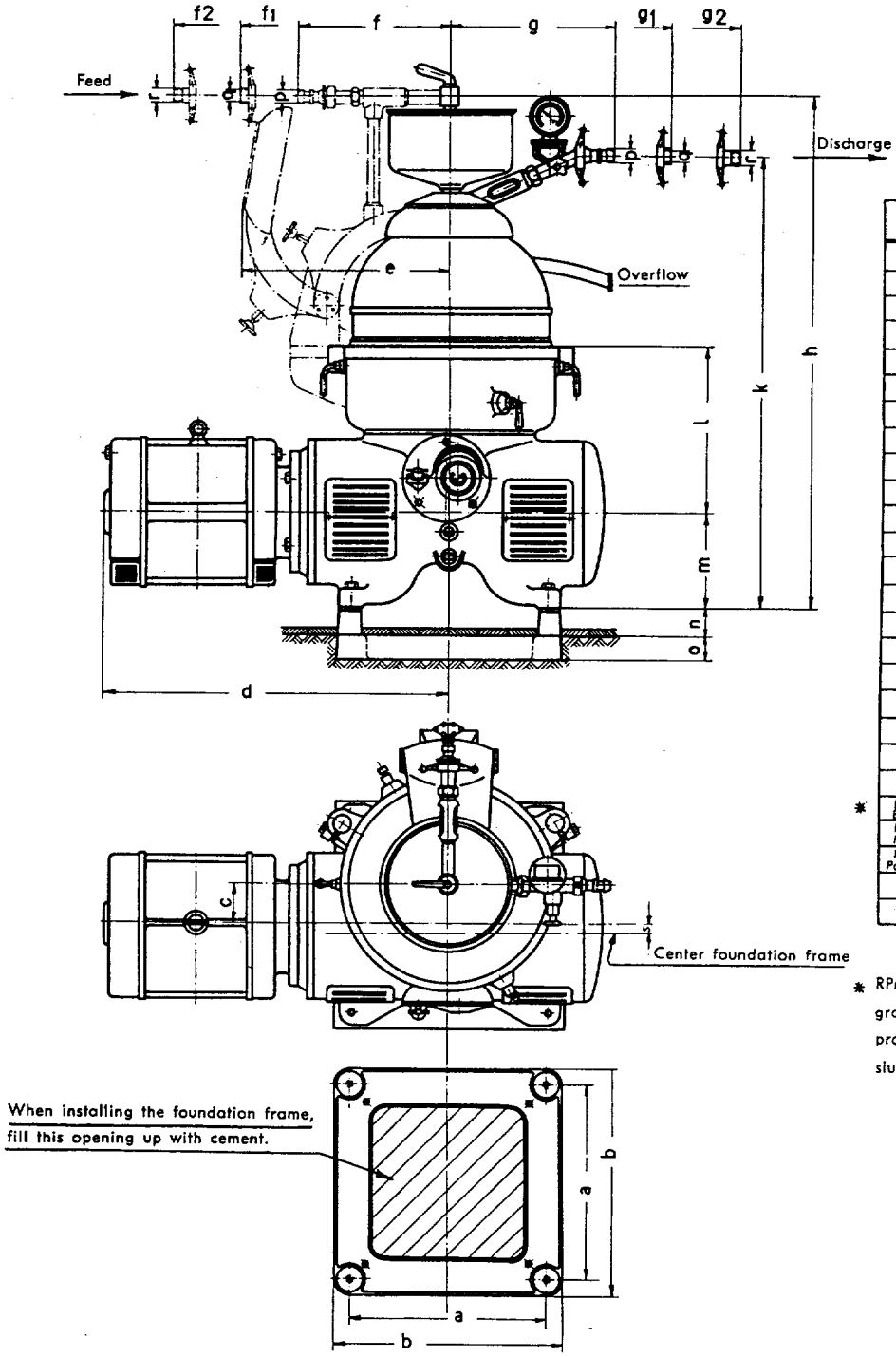

Model	KG 2006	KG 4006	KG 8006	KG 9006	KG 10006
a	13 25/32"	18 7/8"	18 7/8"	21 1/4"	21 1/4"
b	16 1/8"	21 7/8"	21 7/8"	24 5/8"	24 5/8"
c	2 3/4"	4 "	4 "	4 13/16"	4 13/16"
d	26 3/4"	32 9/32"	33 1/2"	35 7/16"	35 7/16"
e	14 49/64"	17 1/8"	20 1/2"	24 13/16"	22 7/16"
f	13 "	14 3/4"	14 3/4"	14 3/4"	14 3/4"
f 1	10 9/16"	12 5/16"	12 5/16"	12 5/16"	12 5/16"
f 2	11 3/4"	13 1/2"	13 1/2"	13 1/2"	13 1/2"
g	15 1/2"	15 1/2"	15 1/2"	15 1/2"	20 "
g1	13 1/8"	13 1/8"	13 1/8"	13 1/8"	17 5/8"
g2	14 5/16"	14 5/16"	14 5/16"	14 5/16"	18 13/16"
h	37 1/2"	48 "	49 1/4"	53 13/64"	55 11/16"
k	34 1/16"	42 5/16"	43 3/8"	42 13/64"	49 "
l	11 5/8"	16 5/8"	16 1/4"	18 1/2"	24 13/16"
m	6 13/16"	9 1/16"	9 1/16"	8 7/8"	8 7/8"
n	3 5/32"	3 9/16"	3 9/16"	2 49/64"	3 9/16"
o	2 "	2 3/8"	2 3/8"	2 3/8"	2 3/8"
p	1 7/32"ø	1 7/32"ø	1 7/32"ø	1 7/32"ø	1 7/32"ø / 1 27/32"ø
q	1 1/8"	1 1/8"	1 1/8"	1 1/8"	1 37/64"
r	1"	1"	1"	1"	1 1/2"
s	21/32"	1 7/64"	1 7/64"	1 59/64"	1 59/64"
* RPM Bowl	8500	7000	6500	5600	4500
RPM Motor	1425	1430	1450	1450	1450
Motor Power HP	5,4	7,5	10	15	15

* RPM of bowl rated for specific gravities of the product to be processed and the separated sludge of up to 1.1 kg/dm³.

Fig. 12

Installation Plan KG 2006 - KG 10006

(Enclosed Feed)

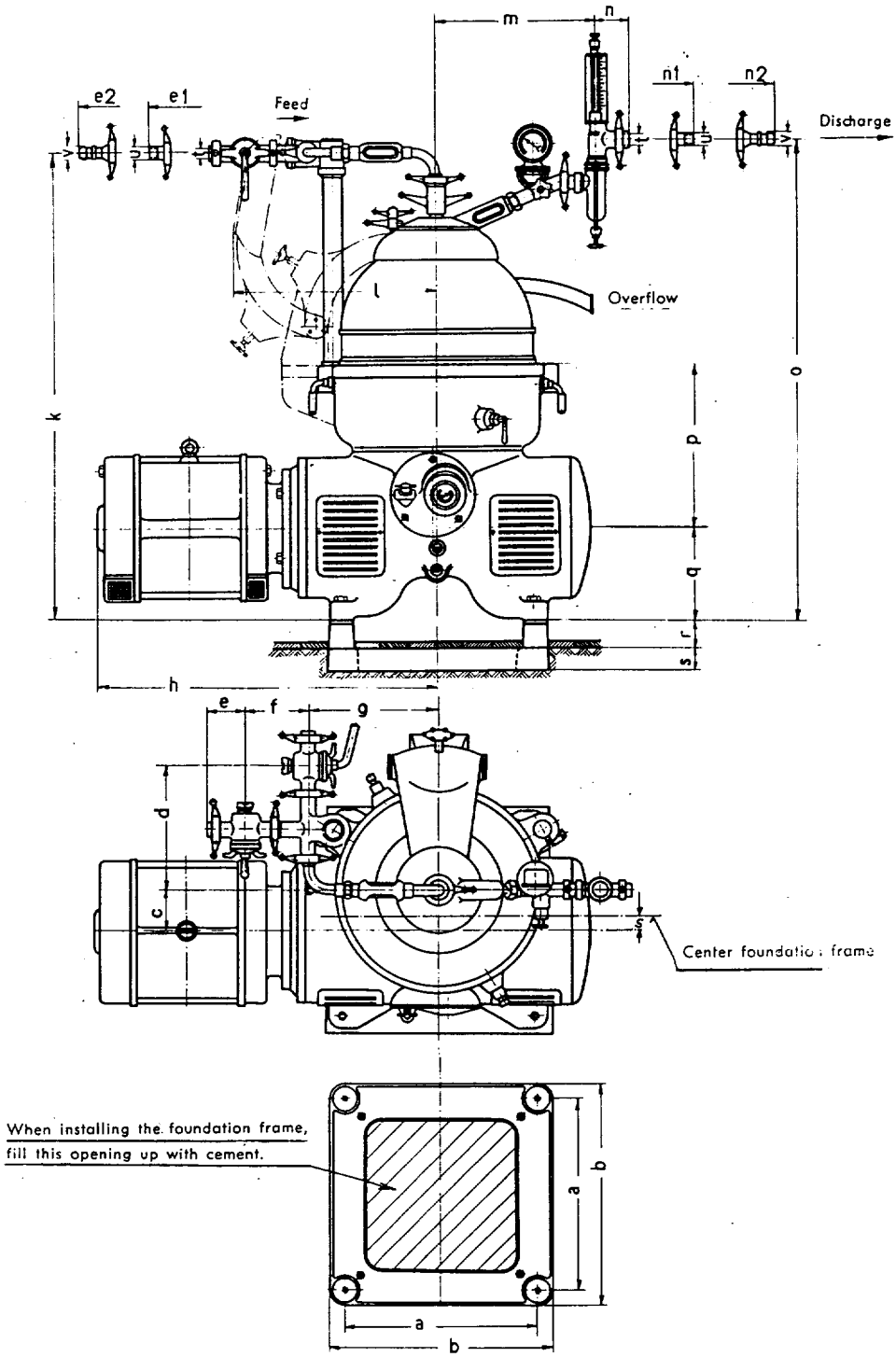

Model	KG 2006	KG 4006	KG 8006	KG 5006	KG 10006
a	13 25/32"	18 7/8"	18 7/8"	21 1/4"	21 1/4"
b	16 1/8"	21 7/8"	21 7/8"	24 5/8"	24 5/8"
c	2 3/4"	4"	4"	4 13/16"	4 13/16"
d	12 3/32"	12 3/32"	12 3/32"	12 3/32"	14 3/4"
e	3 15/64"	3 15/64"	3 15/64"	3 15/64"	3 15/32"
e1	4 1/2"	4 1/2"	4 1/2"	4 1/2"	4 5/8"
e2	5 43/64"	5 43/64"	5 43/64"	5 43/64"	6"
f	6 1/8"	6 1/8"	6 1/8"	6 1/8"	6 1/2"
g	10 1/4"	12 5/8"	12 5/8"	12 5/8"	15 7/8"
h	26 3/4"	32 9/32"	33 1/2"	35 7/16"	35 7/16"
k	36 5/8"	45 1/4"	46 1/2"	50 1/2"	55 7/8"
l	14 39/64"	17 1/8"	20 1/2"	24 13/16"	22 7/16"
m	18 13/16"	18 13/16"	18 13/16"	18 21/64"	22 1/16"
n	3 5/8"	3 5/8"	3 5/8"	3 49/64"	3 7/8"
n1	4 7/8"	4 7/8"	4 7/8"	4 1/2"	5"
n2	6 1/16"	6 1/16"	6 1/16"	6 3/8"	6 3/8"
o	42 3/16"	51"	52"	55 7/8"	57 5/16"
p	11 5/8"	16 5/8"	16 1/4"	18 1/2"	24 13/16"
q	6 13/16"	9 1/16"	9 1/16"	8 7/8"	8 7/8"
r	3 5/32"	3 9/16"	3 9/16"	2 49/64"	3 9/16"
s	2"	2 3/8"	2 3/8"	2 3/8"	2 3/8"
t	1 1/2"	1 1/8"	1 1/8"	1 1/8"	1 33/64"
u	1"	1"	1"	1"	1 1/2"
v	1 3/32"	1 7/32"	1 7/32"	1 7/32"	1 9/32"
w	[illegible]	1 7/64"	1 7/64"	1 59/64"	1 59/64"
* [illegible]	8500	7000	6500	5600	4500
[illegible]	1425	1430	1450	1450	1450
Motor power HP	5,4	7,5	10	15	15

* RPM of bowl rated for specific gravities of the product to be processed and the separated sludge of up to 1.1 kg/dm³.

Fig. 13

Westfalia Separator AG

Unternehmensbereich
Prozeßtechnik

Werner-Habig-Str.1 • D-59302 Oelde • Telefon +49(0)2522/77-0 • Telefax: +49(0)2522/77-2488