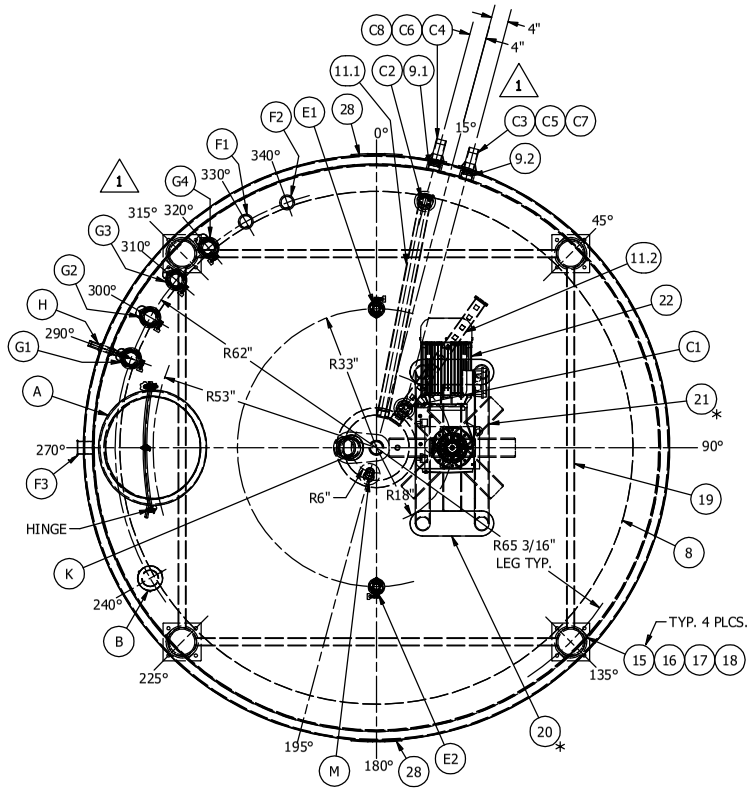

PLAN VIEW
SCALE 1 : 24

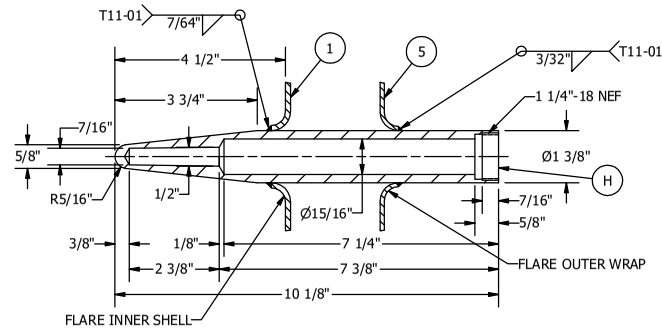

#26P397 RECORDING WELL DETAIL
SCALE 3 : 8
SAME AS ANDERSON #41247

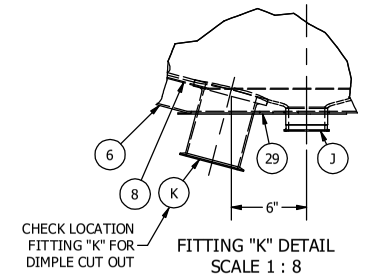

FITTING "K" DETAIL
SCALE 1 : 8

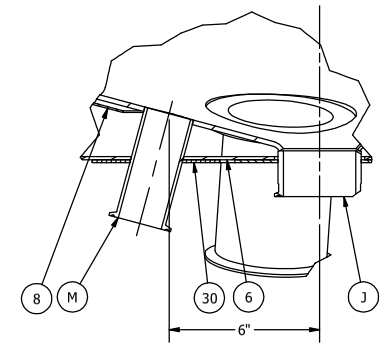

FITTING "M" DETAIL
SCALE 1 : 4

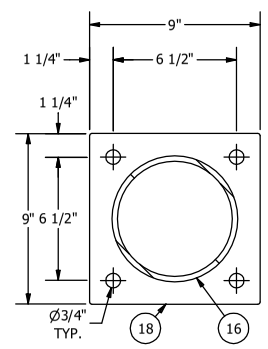

LOAD CELL MOUNT PLATE DETAIL
SCALE 3 : 16

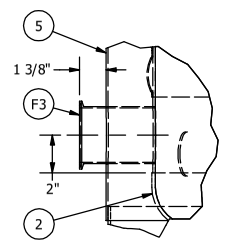

FITTING "F3" DETAIL
SCALE 3 : 16

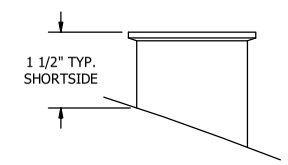

DETAIL TYP. ALL T.C. FERRULES
ON TOP HEAD
SCALE NONE

MATERIAL SCHEDULE

ITEM #	QTY.	SIZE / THICK	MATERIAL	SA #	DESCRIPTION
1	1	10 GA.	316L S.S.	240	INNER SHELL
2	1	7 GA.	316L S.S.	240	INNER BOTTOM HEAD, 15 deg CONE W/ 2" K.R., & 3/4" S.F.
3	1	10 GA.	316L S.S.	--	TOP HEAD (F&D) W/ 150" D.R., 3" K.R., & 1" S.F. - 19 15/16" HEAD DEPTH
4	1	2"	TIW	--	THERMO WOOL INSULATION (SIDES & BOTTOM)
5	1	12 GA.	304 S.S.	--	OUTER WRAP
6	1	10 GA.	304 S.S.	--	OUTER BOTTOM HEAD, 15.00 deg CONE W/ 2" K.R., & 1" S.F. (APPROX. 19" DIA. FLAT)
7	1	16 GA.	304 S.S.	240	HEAT EXCHANGE SURFACE (SIDE WALL CHANNEL) ~247 SQ.FT.
8	1	14 GA.	304 S.S.	240	HEAT EXCHANGE SURFACE (BOTTOM HEAD DIMPLE) - 2 1/4" x 2 1/4" x 3/8" DIA. ~83 SQ.FT.
9	2	10 GA.	304 S.S.	240	SIDE WALL HEADERS
10	4	3/16" THK.	304 S.S.	240	HEADER BAFFLE
11	2	10 GA.	304 S.S.	240	BOTTOM HEAD HEADERS
12	6	2" 11 GA.	304 S.S.	249	INTERNAL H.T.S. WELD SLEEVE
13	2	2" 11 GA.	304 S.S.	249	INTERNAL H.T.S. WELD SLEEVE
14	8	2"	--	--	PIPETITE EXPANSION RING & BOOT FOR HTS FITTING
15	4	10 GA.	304 S.S.	--	LEG TO SHELL PADS
16	4	6" SCH. 40	304 S.S.	--	LEG
17	4	12 GA.	304 S.S.	--	LEG ESCUTCHEON
18	4	1/2" THK.	304 S.S.	--	LOAD CELL MOUNT PLATE
19	4	1 1/2" SCH. 40	304 S.S.	--	LEG BRACING (~85.871 in LG.)
20	2	10 GA.	304 S.S.	--	MOTOR MOUNT REPAD
21	1	--	304 S.S.	--	MOTOR MOUNT ASSEMBLY (1/2" THK. PLATE & 3" SCH. 40)
22	1	20 H.P.	--	--	NORD SINGLE SPEED HELICAL BEVEL GEARMOTOR, 20 H.P., 155 R.P.M., 230/460 VOLT, 3 PHASE, 60 HERTZ, TEFC, FRAME SK 9042.1 AZ-MH 160LP/4, 2 7/16" HOLLOW BORE WITH GRIP MAXX, B14 FLANGE, M5 MOUNTING POSITION, S.S. PAINT, VFD RATED 5-1 TURNDOWN
23	1	3" RD.	316L S.S.	--	MOTOR SHAFT ADAPTOR
24	1	10"	NEOPRENE	--	RUBBER DUST SHIELD - 2 7/8" I.D. HOLE
25	1	3" SCH. 80	316L S.S.	--	CENTER SHAFT
26	3	30" DIA.	316L S.S.	--	TURBINE FLOW AGITATOR W/ (4) 0.375in THK. BLADES & 4.00in O.D. HUB
27	1	--	--	--	GUIDE BEARING ASSEMBLY (316L S.S. & ERTALYTE - 210° F. MAX. SERVICE TEMP)
28	2	1/4" THK.	304 S.S.	--	LIFT PLATE (12" X 12")
29	1	12 GA.	304 S.S.	--	ESCUTCHEON FITTING "J" & "K"
30	1	12 GA.	304 S.S.	--	ESCUTCHEON FITTING "M"

NOZZLE SCHEDULE

	ITEM #	QTY.	STUB MTL	STUB SA #	FLANGE MTL	FLANGE SA #	SIZE / THICK	RATE	DESCRIPTION
	A	1	316L S.S.	--	--	--	24" DIA.	--	MANHOLE ASSEMBLY WITH SUPPORT ARM, HINGE, & NITRILE GASKET
	B	1	SCH. 10 316L S.S.	--	--	--	4" X 6"	--	3 1/2" X SCH. 10 PIPE STUB W/ 6" 304 S.S. TWIST PIN MOUNTED BAYONET VENT ASSEMBLY
	C	8	SCH. 40 304 S.S.	312	--	--	2"	--	JACKET THREADED PIPE NIPPLE
	D	1	316L S.S.	--	--	--	6" X 3"	--	14 WLMP TRI-CLAMP FERRULE W/ SHAFT SEAL & (1) O-RING - (3) SPARE O-RINGS INSTALLED ON SHAFT ABOVE SEAL
	E	2	316L S.S.	--	--	--	3"	--	14 WLMP TRI-CLAMP FERRULE W/ ECOLAB SB-18-3, 316L S.S. 2 1/2" DIA. SINGLE SPRAY BALL W/ 1 1/2" TRI-CLAMP END (40 GPM AT 25 PSIG)
1	F	3	316L S.S.	--	--	--	3"	--	14 WLMP TRI-CLAMP FERRULE
	G	4	316L S.S.	--	316L S.S.	--	4" X 3"	--	14 WLMP TRI-CLAMP FERRULE W/ REMOVABLE NO FOAM INLET
	H	1	316L S.S.	--	--	--	1 1/4" 18 NEF	--	RECORDER WELL (TAYLOR #26P397 OR ANDERSON #41247)
	J	1	316L S.S.	--	--	--	3"	--	#14 MPW TRI-CLAMP FERRULE
	K	1	316L S.S.	--	--	--	--	--	ROSEMOUNT TANK SPUD (1199-0061-0002)
	L	1	NYLON	--	--	--	1" DIA.	--	VENT / LEAK DETECTOR
1	M	1	316L S.S.	--	--	--	2"	--	14 MPHT TRI-CLAMP FERRULE

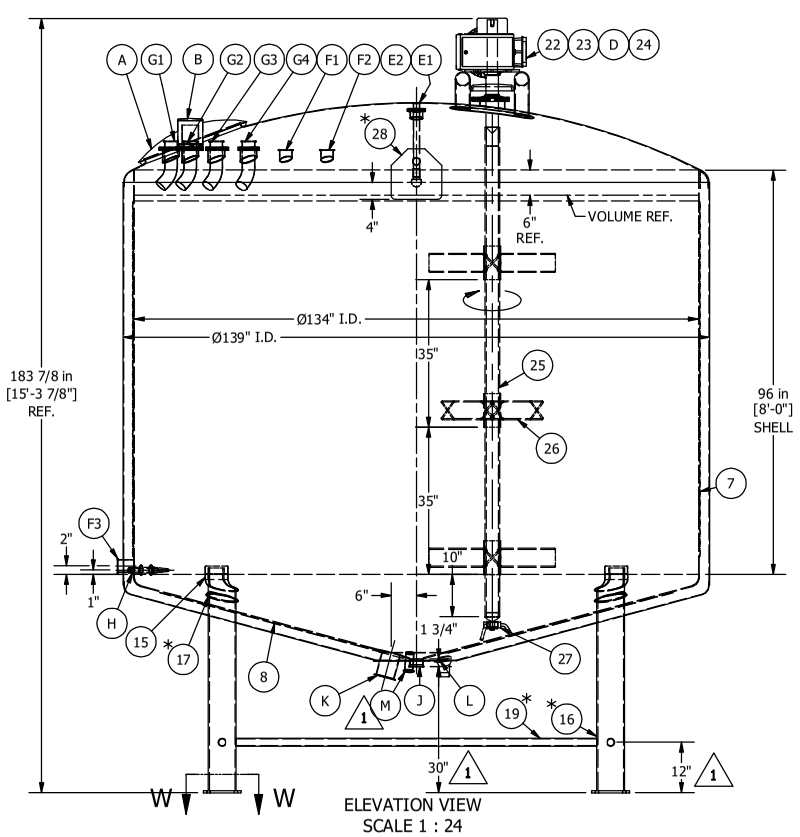

ELEVATION VIEW
SCALE 1 : 24

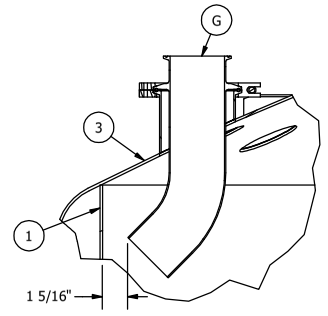

NO-FOAM DETAIL
SCALE 3 : 16

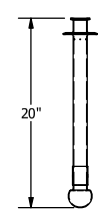

SPRAYBALL DETAIL
SCALE 3 : 32

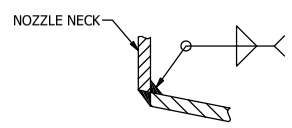

WELD DETAIL TYP.
ALL TOP HEAD FITTINGS
SCALE NONE

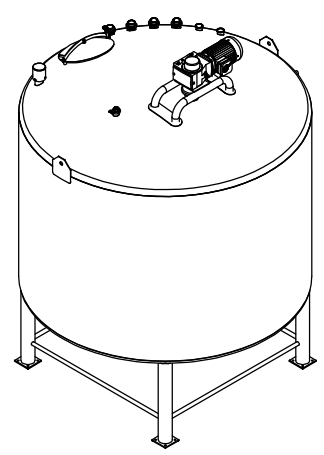

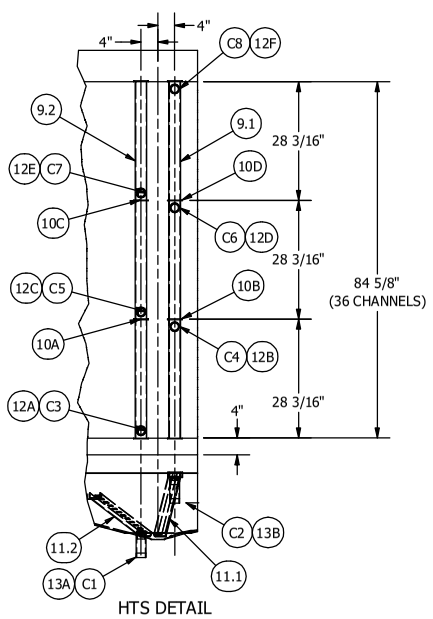

HTS DETAIL
SCALE 1 : 24

SPECIAL NOTES:

1. DIMENSIONS, UNLESS OTHERWISE INDICATED ARE NOMINAL AND STANDARD SHOP TOLERANCES ARE TO BE EXPECTED. MEASUREMENTS FOR ANY FIELD ATTACHMENTS SHOULD BE VERIFIED ON SITE BY OTHERS BEFORE FABRICATION OF THE ATTACHMENTS.
2. IF USED IN CONTACT WITH MATERIALS CONTAINING SALT, CHLORIDES OR OTHER CORROSIVE MATERIALS, THE CORROSION RESISTANCE OF THIS EQUIPMENT IS NOT THE RESPONSIBILITY OF WALKER STAINLESS EQUIPMENT COMPANY.
3. ALL WELDS TO BE CONTINUOUS & FULL PENETRATION UNLESS SHOWN OTHERWISE.
4. EXPOSED INSIDE EDGES OF NOZZLES OR MANHOLES SHALL BE SMOOTH & CORNERS SHALL BE CHAMFERED OR ROUNDED.
5. IT IS THE RESPONSIBILITY OF THE USER TO INSURE THAT THE VESSEL IS ADEQUATELY VENTED TO PREVENT PRESSURE AND OR VACUUM BUILDUP EXCEEDING DESIGN CONDITIONS
6. 1/4" DIA. WEEP HOLE IN ALL SECTIONS OF REINFORCING COLLARS.
7. UNLESS OTHERWISE NOTED ON DRAWING, NOTIFY ENGINEERING IF A NOZZLE 3" PIPE SIZE OR SMALLER CROSSES OR IS WITHIN 1/2" OF A WELD SEAM.
8. JACKET IS DESIGNED FOR HEATING WITH STEAM OR HOT WATER & COOLING WITH GLYCOL OR CHILLED WATER.
9. HTS JACKET DESIGNED TO COOL FROM 80°F TO 44°F WITH 34°F CHILLED WATER IN ~3 HOURS. FLOW RATE 220-240 SPM WITH 13PSI-16PSI PRESSURE DROP. ASSUME U-FACTOR = 100.

REV. DATE	ISSUE	REVISION DESCRIPTION	APP'D BY
06/06/18	1	OUTLET HEIGHT WAS 24". LEG BRACES WERE AT 9". ADD FITTING "M" & "F3". HTS WAS AT 90°. ADD #202 IN TITLE BLOCK. MOVED TOP HEAD FITTINGS.	THA

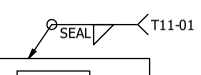

CERTIFIED BY
WALKER STAINLESS EQUIPMENT COMPANY LLC
NEW LISBON, WI

VESSEL	/	PSIG MAWP AT		°F.
MIN. DESIGN METAL TEMP.		°F. AT		PSI
JACKET	75	PSIG MAWP AT	320	°F.
MIN. DESIGN METAL TEMP.	-20	°F. AT	75	PSI
SERIAL NO.	WEP-402394-20	YEAR		
CAPACITY	6000 GALLON	MAT'L	316L S.S.	
MODEL	PZ-CB-SP	DWG.	WEP-402394-20-1A.dwg	

VESSEL NON-CODE: ATMOSPHERIC AT 200 DEG. F.

WALKER ENGINEERED PRODUCTS

LABEL SCHEDULE

ITEM	PART #	QTY.	DESCRIPTION	LOCATION
L1		1	ASME NAME TAG	3" BELOW MANWAY ON WRAP
L2		1	WALKER DECAL	NEAR NAME TAG
L18	GF991-18	1	AIR OUT TANK	ON MANWAY
L27	H0991-27	1	HOT SURFACES	NEAR HTS FITTINGS
L29	RP991-29	1	ROTATING PARTS	ON MANWAY
L30	CP991-30	1	MANHOLE C.I.P.	ON MANWAY

STANDARD INFORMATION

ASME: YES; PER ASME SECTION VIII - DIVISION 1, 2017 EDITION - JACKET ONLY

DESIGN PRESSURE & TEMP.: VESSEL: ATMOSPHERIC PRESSURE AT 200°F. - NON CODE
JACKET: RATED FOR 75 PSIG AT 320°F. / -20°F. - CODE STAMPED

HYDRO TEST AMBIENT: VESSEL: N/A
JACKET: 250 PISG

CORROSION ALLOWANCE: NONE

PASSIVATION REQ'D: NO

SHOP TOLERANCE: ±1/8" , ±2° FOR LOCATION, & ±1/2° FOR LEVELNESS

RADIOGRAPH: NO

N.D.E.: LIQUID PENETRANT LEAK TEST OF ALL VESSEL WELDS IN PRODUCT CONTACT AREAS

P.W.H.T.: NO

TANK CONTENTS: SAUCE | VISCOSITY: 2500 CPS

SP. GR.: 1.2 | DEGREE OF AGITATION: GENTLE

APPROX. EMPTY WEIGHT: 7700 lbmass

FINISH: INTERIOR: SURFACES - #4 SANITARY FINISH (3A STANDARD - Ra RANGE 23-32)
WELDS - GROUND & POLISHED - (3A STANDARD - Ra RANGE 23-32)
EXTERIOR: SURFACES - #4 INDUSTRIAL FINISH (Ra RANGE 33-43)
WELDS - GROUND & POLISHED - Ra RANGE 33-43

EXTERIOR: WELDS - STRIPE BUFFED
*DENOTES THE WELD FINISH FOR THE AREAS MARKED WITH AN ASTERISK

CRATING INSTRUCTIONS: SADDLES

REFERENCE DRAWINGS:

NO. REQ'D 1 SERIAL NO WEP-402394-20

WEP-402394-20-THA

APPROVED FOR CONSTRUCTION
BY THA DATE 07/16/18

A.S.M.E.

ROUTING
FILE
FABRICATOR
QUALITY CONTROL
HEAD DEPT.
PLASMA & BRAKE
PARTS DEPT.
GRIND
CARPENTER

WALKER ENGINEERED PRODUCTS

WALKER ENGINEERED PRODUCTS

SCALE:
DATE: 6/6/2018
DRAWN BY: KSMITH
REVISION: 1

6,000 GALLON PZ-CB-SP JACKETED CONE BOTTOM PROCESSOR #202

JOB: RWS / PROTENERGY NATURAL FOODS
CAMBRIDGE, MD 21613

DRAWING NUMBER: WEP-402394-20-1A.dwg

NOTE! DO NOT SCALE THIS DRAWING!