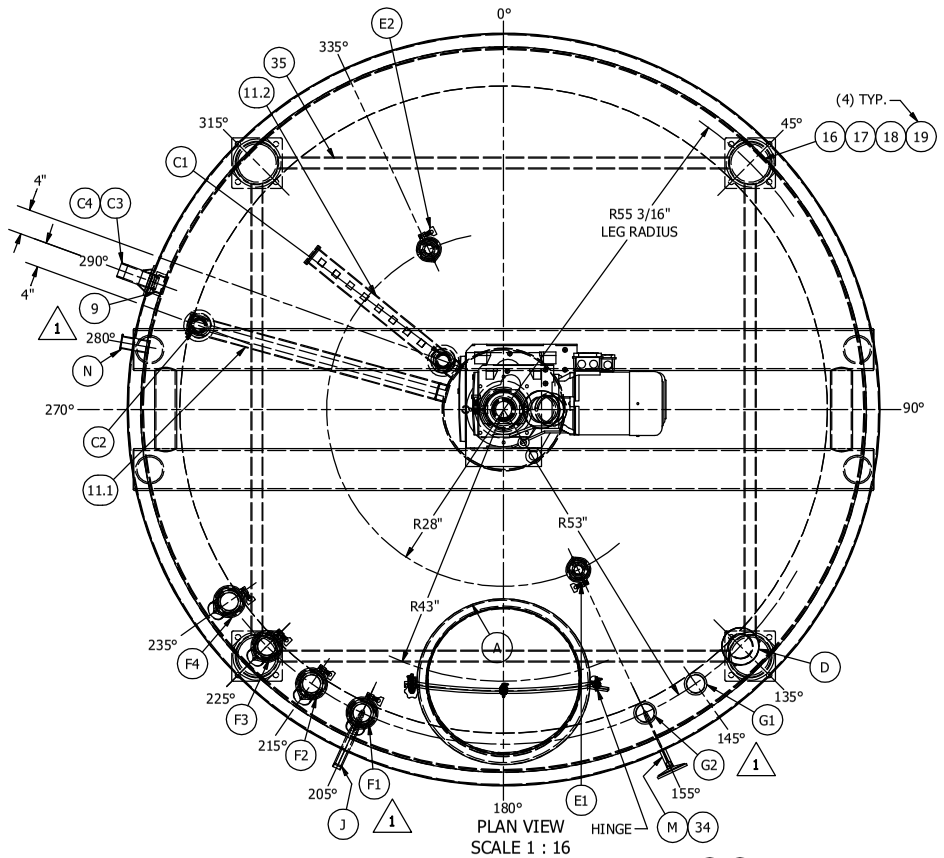

PLAN VIEW
SCALE 1 : 16

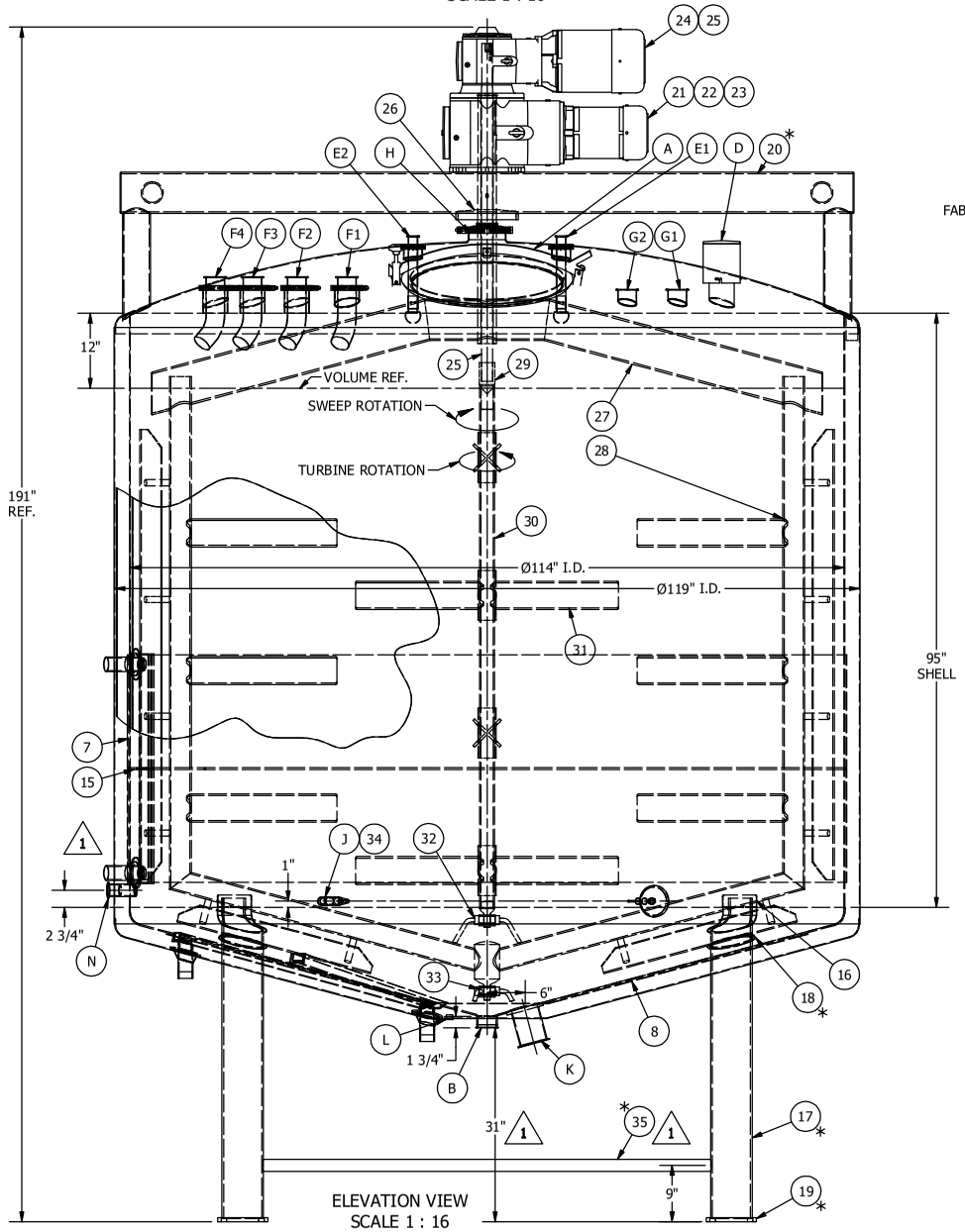

ELEVATION VIEW
SCALE 1 : 16

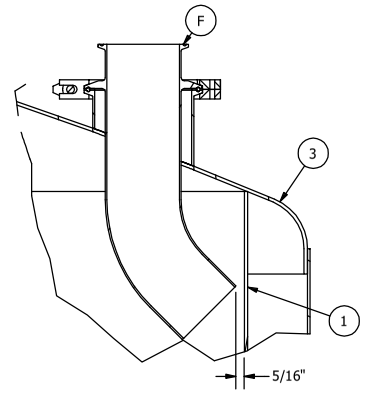

NO FOAM DETAIL
SCALE 1 : 4

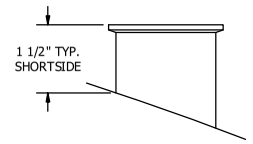

DETAIL TYP. ALL T.C. FERRULES
ON TOP HEAD
SCALE NONE

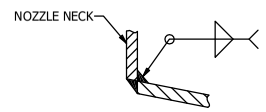

WELD DETAIL TYP.
ALL TOP HEAD FITTINGS
SCALE NONE

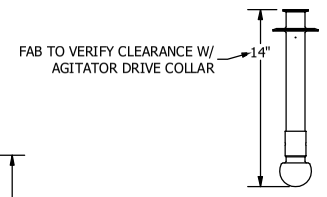

SPRAYBALL DETAIL
SCALE 1 : 8

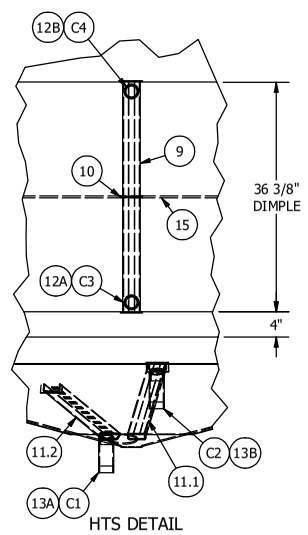

HTS DETAIL
SCALE 1 : 16

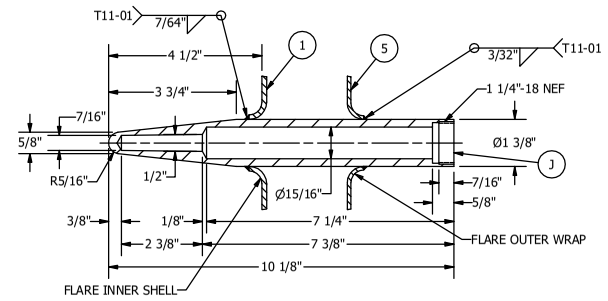

#26P397 RECORDING WELL DETAIL
SCALE: NONE
SAME AS ANDERSON #41247

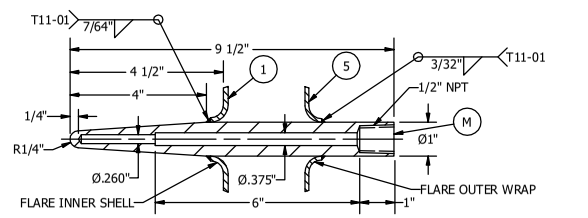

#1300 INDICATING WELL DETAIL
SCALE 3 : 8

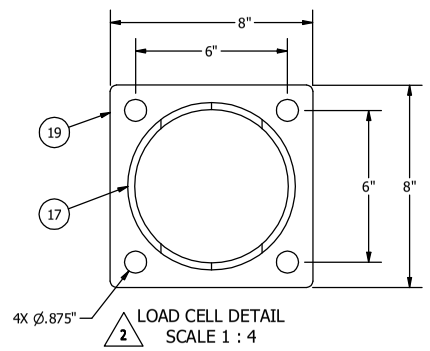

LOAD CELL DETAIL
SCALE 1 : 4

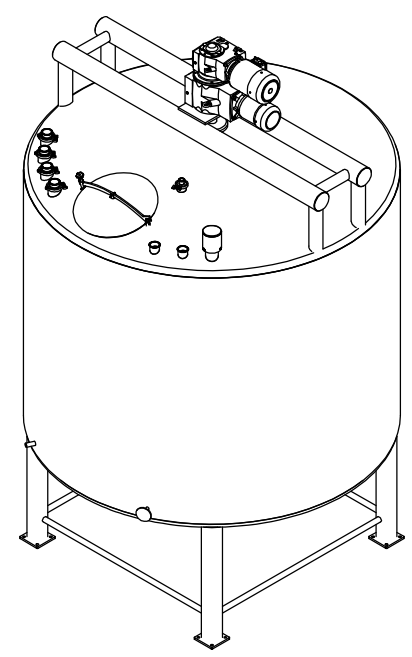

MATERIAL SCHEDULE

ITEM #	QTY.	SIZE / THICK	MATERIAL	SA #	DESCRIPTION
1	1	10 GA.	316L S.S.	240	INNER SHELL
2	1	7 GA.	316L S.S.	240	INNER BOTTOM HEAD, 15 deg CONE W/ 2" K.R. & 3/4" S.F.
3	1	10 GA.	316L S.S.	--	TOP HEAD (F&D) W/ 150" D.R., 2" K.R. & 1" S.F. - 14 11/16" HEAD DEPTH
4	1	2"	TIW	--	THERMO WOOL INSULATION (SIDES & BOTTOM)
5	1	12 GA.	304 S.S.	--	OUTER WRAP
6	1	10 GA.	304 S.S.	--	OUTER BOTTOM HEAD, 15.00 deg CONE W/ 2" K.R. & 1" S.F. (APPROX. 19" DIA. FLAT)
7	1	14 GA.	304 S.S.	240	HEAT EXCHANGE SURFACE (SIDE WALL DIMPLE) 2 1/4" X 2 1/4" SPACING ~88 SQ.FT.
8	1	14 GA.	304 S.S.	240	HEAT EXCHANGE SURFACE (BOTTOM HEAD DIMPLE) 2 1/4" X 2 1/4" SPACING ~58 SQ.FT.
9	1	10 GA.	304 S.S.	240	SIDE WALL HEADERS
10	1	3/16" THK.	304 S.S.	240	HEADER BAFFLE
11	2	10 GA.	304 S.S.	240	BOTTOM HEAD HEADERS
12	2	2" 11 GA.	304 S.S.	249	INTERNAL H.T.S. WELD SLEEVE
13	2	2" 11 GA.	304 S.S.	249	INTERNAL H.T.S. WELD SLEEVE
14	4	2"	--	--	PIPETITE EXPANSION RING & BOOT FOR HTS FITTING
15	1	5/16" RD.	304 S.S.	479	SIDE WALL DIMPLE BAFFLE
16	4	10 GA.	304 S.S.	--	LEG TO SHELL PADS
17	4	6" SCH. 40	304 S.S.	--	LEG
18	4	12 GA.	304 S.S.	--	LEG ESCUTCHEON
19	4	5/8" THK.	304 S.S.	--	FLOOR PLATE
20	1	--	304 S.S.	--	MOTOR MOUNT ASSEMBLY (6" SCH. 40 HORIZONTAL, 4" SCH. 40 VERTICAL, 3" SCH. 40 BRACE, & 3/4" THK. PLATE)
21	1	5 H.P.	--	--	NORD SINGLE SPEED HELICAL BEVEL GEARMOTOR, 5 H.P., 15 R.P.M., 230/460 VOLT, 3 PHASE, 60 HERTZ, TEFC, FRAME SK9052.1 AZ 112MP/4, 2 15/16" HOLLOW BORE WITH 3/4" X 1/2" KEY, B14 FLANGE, M5 MOUNTING POSITION, S.S. PAINT, VFD RATED 5 – 1 TURNDOWN
22	1	3" O.D. X 1/2" WALL	316L S.S.	--	MOTOR SHAFT ADAPTOR
23	1	2 15/16" SHAFT DIA.	C.S.	--	EXTERNAL RETAINING RING (McMASTER CARR #97633A478)
24	1	10 H.P.	--	--	NORD SINGLE SPEED HELICAL BEVEL GEARMOTOR, 10 H.P., 60 R.P.M., 230/460 VOLT, 3 PHASE, 60 HERTZ, TEFC, FRAME SK9032.1 AF-8H 132MP/4, 1 11/16" HOLLOW BORE WITH 3/8" SQ KEY, B5 FLANGE WITH FEMALE PILOT, M5 MOUNTING POSITION, S.S. PAINT, VFD RATED 5 – 1 TURNDOWN
25	1	1 3/4" RD.	316L S.S.	--	MOTOR SHAFT ADAPTOR
26	1	10"	NEOPRENE	--	RUBBER DUST SHIELD - 2 7/8" I.D. HOLE
27	1	6" SCH. 40	316L S.S.	--	DRIVE COLLAR
28	1	3" SCH. 40	316L S.S.	--	SIDE & BOTTOM SWEEP AGITATOR
29	1	2 1/2" RD.	316L S.S.	--	TURBINE SHAFT ADAPTOR
30	1	2" SCH. 80 SEAMLESS	316L S.S.	--	CENTER SHAFT
31	4	42" DIA.	316L S.S.	--	TURBINE FLOW AGITATOR W/ (2) 3/8" THK. BLADES & 2 7/8" O.D. HUB
32	1	--	--	--	GUIDE BEARING ASSEMBLY - UPPER (316L S.S. & ERTALYTE - 210° F. MAX. SERVICE TEMP)
33	1	--	--	--	GUIDE BEARING ASSEMBLY (316L S.S. & ERTALYTE - 210° F. MAX. SERVICE TEMP)
34	1	--	--	--	5" DIAL THERMOMETER W/ 1/2" NPT CONN. & 9" LG. STEM (20°F. - 240°F.)
35	4	1 1/2" SCH. 40	304 S.S.	--	LEG BRACE

NOZZLE SCHEDULE

ITEM #	QTY.	STUB MTL	STUB SA #	FLANGE MTL	FLANGE SA #	SIZE / THICK	RATE	DESCRIPTION
A	1	316L S.S.	--	--	--	24" DIA.	--	MANHOLE ASSEMBLY WITH SUPPORT ARM, HINGE, & NITRILE GASKET
B	1	316L S.S.	--	--	--	3"	--	#14 MPW TRI-CLAMP FERRULE
C	4	SCH. 40 304 S.S.	312	--	--	2"	--	JACKET THREADED PIPE NIPPLE
D	1	SCH. 10 316L S.S.	--	--	--	4" X 6"	--	3 1/2" X SCH. 10 PIPE STUB W/ 6" 304 S.S. TWIST PIN MOUNTED BAYONET VENT ASSEMBLY
E	2	316L S.S.	--	--	--	3"	--	14 WLMP TRI-CLAMP FERRULE W/ ECOLAB SB-18-3, 316L S.S. 2 1/2" DIA. SINGLE SPRAY BALL W/ 1 1/2" TRI-CLAMP END (40 GPM AT 25 PSIG)
F	4	316L S.S.	--	316L S.S.	--	4" X 3"	--	14 WLMP TRI-CLAMP FERRULE W/ REMOVABLE NO FOAM INLET
G	2	316L S.S.	--	--	--	3"	--	14 WLMP TRI-CLAMP FERRULE
H	1	316L S.S.	--	--	--	6" X 3"	--	L14 AM7 TRI-CLAMP FERRULE W/ SHAFT SEAL & (1) O-RING - (3) SPARE O-RINGS INSTALLED ON SHAFT ABOVE SEAL
J	1	316L S.S.	--	--	--	1 1/4" 18 NEF	--	RECORDER WELL (TAYLOR #26P397 OR ANDERSON #41247)
K	1	316L S.S.	--	--	--	--	--	ROSEMOUNT TANK SPUD (1199-0061-0002)
L	1	NYLON	--	--	--	1" DIA.	--	VENT / LEAK DETECTOR
M	1	316L S.S.	--	--	--	1/2" NPT	--	#1300 INDICATING WELL
N	1	316L S.S.	--	--	--	2"	--	14 MPHT TRI-CLAMP FERRULE

CERTIFIED BY
WALKER STAINLESS EQUIPMENT COMPANY LLC
NEW LISBON, WI

UM
W

VESSEL	--	PSIG MAWP AT	---	°F.	
MIN. DESIGN METAL TEMP.	---	°F. AT	---	PSI	
JACKET	75	PSIG MAWP AT	320	°F.	
MIN. DESIGN METAL TEMP.	-20	°F. AT	75	PSI	
SERIAL NO.	WEP-402395-20	YEAR			
CAPACITY	4000 GALLON	MAT'L	316L S.S.		
MODEL	PZ-CB-CR	DWG.	WEP-402395-20-1A.dwg		

VESSEL NON-CODE: ATMOSPHERIC AT 200 DEG. F.

WALKER ENGINEERED PRODUCTS

LABEL SCHEDULE

ITEM	PART #	QTY.	DESCRIPTION	LOCATION
L1		1	ASME NAME TAG	3" BELOW MANWAY ON WRAP
L2		1	WALKER DECAL	NEAR NAME TAG
L18	GF991-18	1	AIR OUT TANK	ON MANWAY
L27	H0991-27	1	HOT SURFACES	NEAR HTS FITTINGS
L29	RP991-29	1	ROTATING PARTS	ON MANWAY

SPECIAL NOTES:

1. DIMENSIONS, UNLESS OTHERWISE INDICATED ARE NOMINAL AND STANDARD SHOP TOLERANCES ARE TO BE EXPECTED. MEASUREMENTS FOR ANY FIELD ATTACHMENTS SHOULD BE VERIFIED ON SITE BY OTHERS BEFORE FABRICATION OF THE ATTACHMENTS.
2. IF USED IN CONTACT WITH MATERIALS CONTAINING SALT, CHLORIDES OR OTHER CORROSIVE MATERIALS, THE CORROSION RESISTANCE OF THIS EQUIPMENT IS NOT THE RESPONSIBILITY OF WALKER STAINLESS EQUIPMENT COMPANY.
3. ALL WELDS TO BE CONTINUOUS & FULL PENETRATION UNLESS SHOWN OTHERWISE.
4. EXPOSED INSIDE EDGES OF NOZZLES OR MANHOLES SHALL BE SMOOTH & CORNERS SHALL BE CHAMFERED OR ROUNDED.
5. IT IS THE RESPONSIBILITY OF THE USER TO INSURE THAT THE VESSEL IS ADEQUATELY VENTED TO PREVENT PRESSURE AND OR VACUUM BUILDUP EXCEEDING DESIGN CONDITIONS
6. 1/4" DIA. WEEP HOLE IN ALL SECTIONS OF REINFORCING COLLARS.
7. UNLESS OTHERWISE NOTED ON DRAWING, NOTIFY ENGINEERING IF A NOZZLE 3" PIPE SIZE OR SMALLER CROSSES OR IS WITHIN 1/2" OF A WELD SEAM.
8. JACKET IS DESIGNED FOR HEATING WITH STEAM OR HOT WATER & COOLING WITH GLYCOL OR CHILLED WATER.

REV. DATE	ISSUE	REVISION DESCRIPTION	APP'D BY
7/24/18	2	LOAD CELLS WERE 9" SQUARE W/ (4) 6 1/2" SPACED HOLES.	THA
06/06/18	1	HTS WAS AT 270°. MOVED TOP HEAD FITTINGS. LOAD CELLS ROTATED 45°. ADD FITTING "N". OUTLET HEIGHT WAS 16". ADD #118 IN TITLE BLOCK. ADD LEG BRACES.	THA

STANDARD INFORMATION

ASME: YES; PER ASME SECTION VIII - DIVISION 1, 2017 EDITION - JACKET ONLY

DESIGN PRESSURE & TEMP.: VESSEL: ATMOSPHERIC PRESSURE AT 200°F. - NON CODE
JACKET: **RATED FOR 75 PSIG AT 320°F. / -20°F. - UM CODE STAMPED**

HYDRO TEST AMBIENT: VESSEL: NONE
JACKET: 250 PISG

CORROSION ALLOWANCE: NONE

PASSIVATION REQ'D: NO

SHOP TOLERANCE: ±1/8" , ±2° FOR LOCATION, & ±1/2° FOR LEVELNESS

RADIOGRAPH: NONE

N.D.E.: LIQUID PENETRANT LEAK TEST OF ALL VESSEL WELDS IN PRODUCT CONTACT AREAS

P.W.H.T.: NONE

TANK CONTENTS: -- | VISCOSITY: 2500 CPS

SP. GR.: 1.2 | DEGREE OF AGITATION: GENTLE

APPROX. EMPTY WEIGHT: 7500 lbmass

FINISH: INTERIOR: SURFACES - #4 SANITARY FINISH (3A STANDARD - Ra RANGE 23-32)
WELDS - GROUND & POLISHED - (3A STANDARD - Ra RANGE 23-32)
EXTERIOR: SURFACES - #4 INDUSTRIAL FINISH (Ra RANGE 33-43)
WELDS - GROUND & POLISHED - INDUSTRIAL FINISH (RA RANGE 33-43)

EXTERIOR: WELDS - STRIPE BUFFED
***DENOTES THE WELD FINISH FOR THE AREAS MARKED WITH AN ASTERISK**

CRATING INSTRUCTIONS: SADDLES

REFERENCE DRAWINGS:

NO. REQ'D 1 SERIAL NO WEP-402395-20

WEP-402395-20-THA

APPROVED FOR CONSTRUCTION
BY THA DATE 07/26/18

UM A.S.M.E.

ROUTING
FILE
FABRICATOR
QUALITY CONTROL
HEAD DEPT.
PLASMA & BRAKE
PARTS DEPT.
GRIND
CARPENTER

WALKER ENGINEERED PRODUCTS

WALKER ENGINEERED PRODUCTS

SCALE:
DATE: 6/5/2018
DRAWN BY: KSMITH
REVISION: 2

4,000 GALLON PZ-CB-CR CONE BOTTOM PROCESSOR TANK #118

JOB: RWS / PROTENERGY NATURAL FOODS
CAMBRIDGE, MD 21613

DRAWING NUMBER: WEP-402395-20-1A.dwg

NOTE! DO NOT SCALE THIS DRAWING!