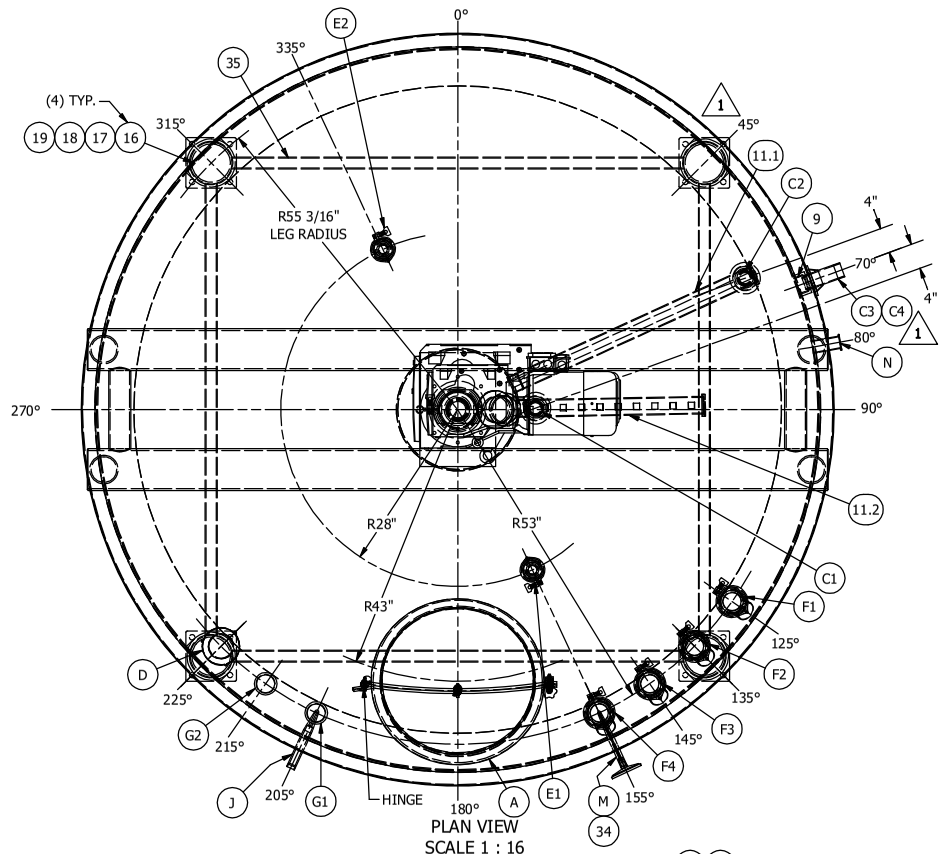


PLAN VIEW
SCALE 1 : 16

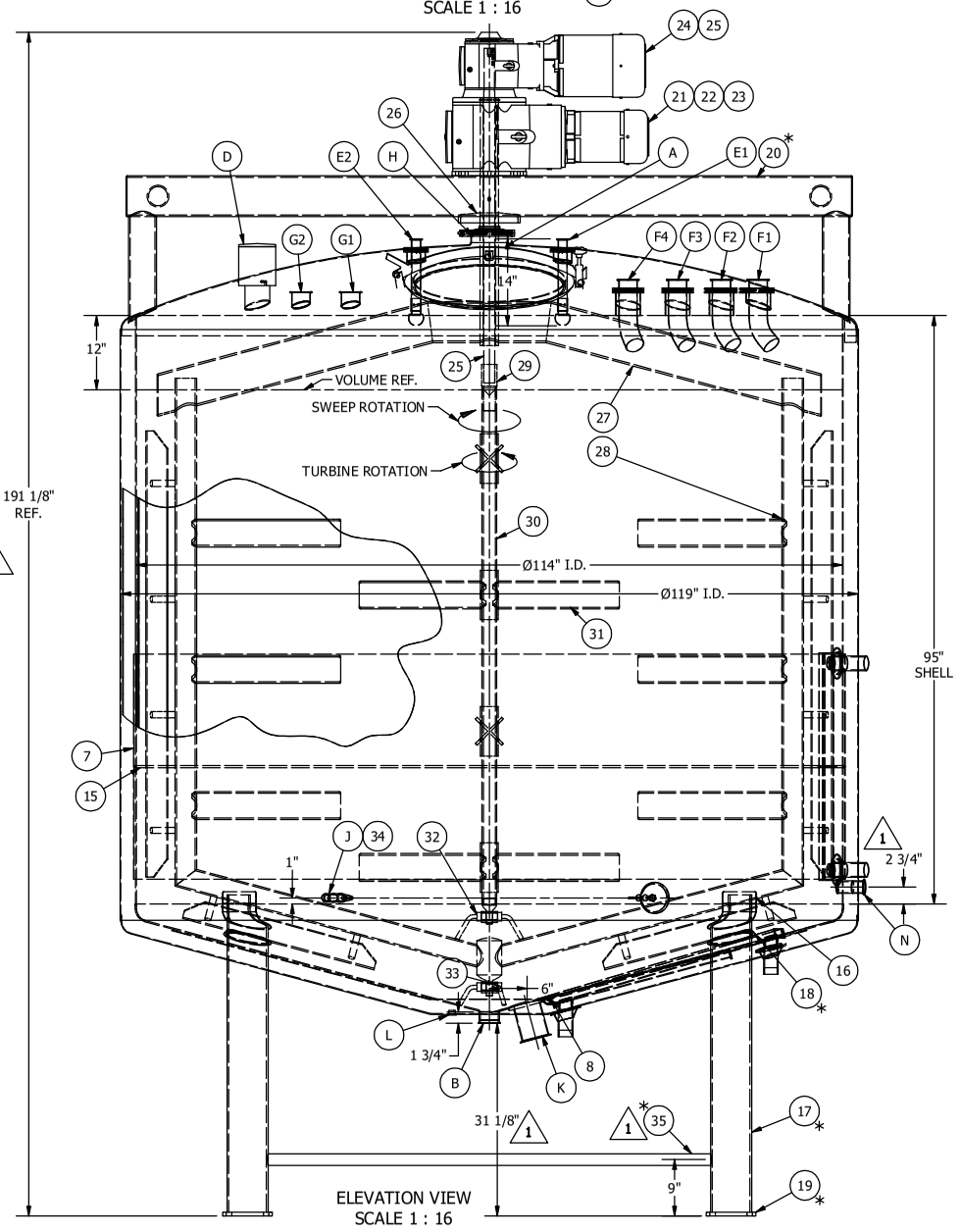


ELEVATION VIEW
SCALE 1 : 16

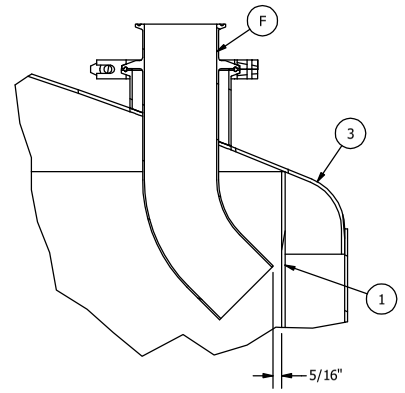


NO FOAM DETAIL
SCALE 1 : 4

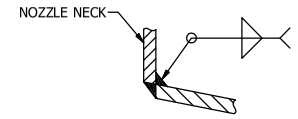


WELD DETAIL TYP.
ALL TOP HEAD FITTINGS
SCALE NONE

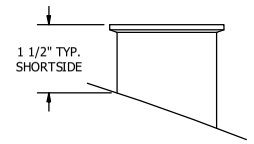


DETAIL TYP. ALL T.C. FERRULES
ON TOP HEAD
SCALE NONE

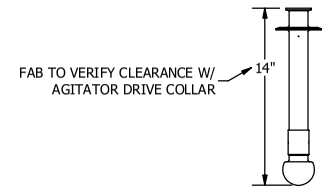


SPRAYBALL DETAIL
SCALE 1 : 8

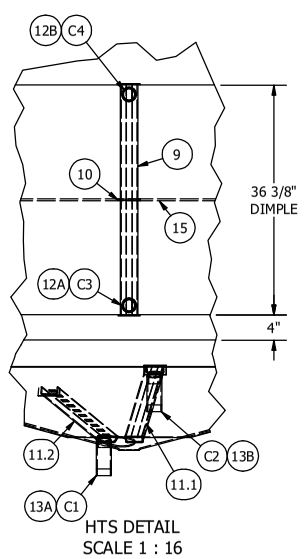


HTS DETAIL
SCALE 1 : 16

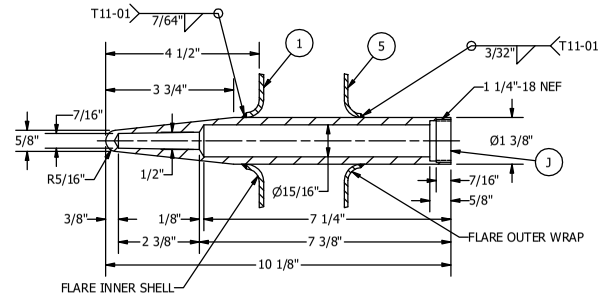


#26P397 RECORDING WELL DETAIL
SCALE: NONE
SAME AS ANDERSON #41247

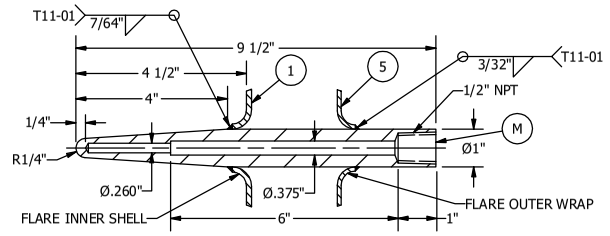


#1300 INDICATING WELL DETAIL
SCALE 3 : 8

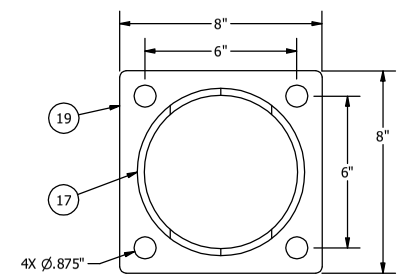


LOAD CELL DETAIL
SCALE 1 : 4

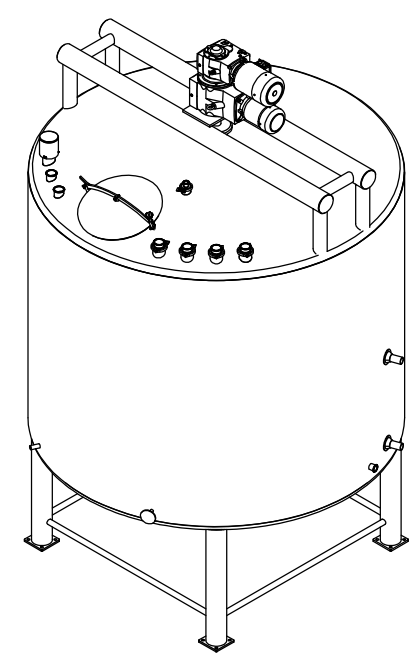

## MATERIAL SCHEDULE

| ITEM # | QTY. | SIZE / THICK | MATERIAL | SA # | DESCRIPTION |
|---|---|---|---|---|---|
| 1 | 1 | 10 GA. | 316L S.S. | 240 | INNER SHELL |
| 2 | 1 | 7 GA. | 316L S.S. | 240 | INNER BOTTOM HEAD, 15 deg CONE W/ 2" K.R. & 3/4" S.F. |
| 3 | 1 | 10 GA. | 316L S.S. | -- | TOP HEAD (F&D) W/ 150" D.R., 2" K.R. & 1" S.F. - 14 11/16" HEAD DEPTH |
| 4 | 1 | 2" | TIW | -- | THERMO WOOL INSULATION (SIDES & BOTTOM) |
| 5 | 1 | 12 GA. | 304 S.S. | -- | OUTER WRAP |
| 6 | 1 | 10 GA. | 304 S.S. | -- | OUTER BOTTOM HEAD, 15.00 deg CONE W/ 2" K.R. & 1" S.F. (APPROX. 19" DIA. FLAT) |
| 7 | 1 | 14 GA. | 304 S.S. | 240 | HEAT EXCHANGE SURFACE (SIDE WALL DIMPLE) 2 1/4" X 2 1/4" SPACING ~88 SQ.FT. |
| 8 | 1 | 14 GA. | 304 S.S. | 240 | HEAT EXCHANGE SURFACE (BOTTOM HEAD DIMPLE) 2 1/4" X 2 1/4" SPACING ~58 SQ.FT. |
| 9 | 1 | 10 GA. | 304 S.S. | 240 | SIDE WALL HEADERS |
| 10 | 1 | 3/16" THK. | 304 S.S. | 240 | HEADER BAFFLE |
| 11 | 2 | 10 GA. | 304 S.S. | 240 | BOTTOM HEAD HEADERS |
| 12 | 2 | 2" 11 GA. | 304 S.S. | 249 | INTERNAL H.T.S. WELD SLEEVE |
| 13 | 2 | 2" 11 GA. | 304 S.S. | 249 | INTERNAL H.T.S. WELD SLEEVE |
| 14 | 4 | 2" | -- | -- | PIPETITE EXPANSION RING & BOOT FOR HTS FITTING |
| 15 | 1 | 5/16" RD. | 304 S.S. | 479 | SIDE WALL DIMPLE BAFFLE |
| 16 | 4 | 10 GA. | 304 S.S. | -- | LEG TO SHELL PADS |
| 17 | 4 | 6" SCH. 40 | 304 S.S. | -- | LEG |
| 18 | 4 | 12 GA. | 304 S.S. | -- | LEG ESCUTCHEON |
| 19 | 4 | 5/8" THK. | 304 S.S. | -- | FLOOR PLATE |
| 20 | 1 | -- | 304 S.S. | -- | MOTOR MOUNT ASSEMBLY (6" SCH. 40 HORIZONTAL, 4" SCH. 40 VERTICAL, 3" SCH. 40 BRACE, & 3/4" THK. PLATE) |
| 21 | 1 | 5 H.P. | -- | -- | NORD SINGLE SPEED HELICAL BEVEL GEARMOTOR, 5 H.P., 15 R.P.M., 230/460 VOLT, 3 PHASE, 60 HERTZ, TEFC, FRAME SK9052.1 AZ 112MP/4, 2 15/16" HOLLOW BORE WITH 3/4" X 1/2" KEY, B14 FLANGE, M5 MOUNTING POSITION, S.S. PAINT, VFD RATED 5 – 1 TURNDOWN |
| 22 | 1 | 3" O.D. X 1/2" WALL | 316L S.S. | -- | MOTOR SHAFT ADAPTOR |
| 23 | 1 | 2 15/16" SHAFT DIA. | C.S. | -- | EXTERNAL RETAINING RING (McMASTER CARR #97633A478) |
| 24 | 1 | 10 H.P. | -- | -- | NORD SINGLE SPEED HELICAL BEVEL GEARMOTOR, 10 H.P., 60 R.P.M., 230/460 VOLT, 3 PHASE, 60 HERTZ, TEFC, FRAME SK9032.1 AF-8H 132MP/4, 1 11/16" HOLLOW BORE WITH 3/8" SQ KEY, B5 FLANGE WITH FEMALE PILOT, M5 MOUNTING POSITION, S.S. PAINT, VFD RATED 5 – 1 TURNDOWN |
| 25 | 1 | 1 3/4" RD. | 316L S.S. | -- | MOTOR SHAFT ADAPTOR |
| 26 | 1 | 10" | NEOPRENE | -- | RUBBER DUST SHIELD - 2 7/8" I.D. HOLE |
| 27 | 1 | 6" SCH. 40 | 316L S.S. | -- | DRIVE COLLAR |
| 28 | 1 | 3" SCH. 40 | 316L S.S. | -- | SIDE & BOTTOM SWEEP AGITATOR |
| 29 | 1 | 2 1/2" RD. | 316L S.S. | -- | TURBINE SHAFT ADAPTOR |
| 30 | 1 | 2" SCH. 80 SEAMLESS | 316L S.S. | -- | CENTER SHAFT |
| 31 | 4 | 42" DIA. | 316L S.S. | -- | TURBINE FLOW AGITATOR W/ (2) 3/8" THK. BLADES & 2 7/8" O.D. HUB |
| 32 | 1 | -- | -- | -- | GUIDE BEARING ASSEMBLY - UPPER (316L S.S. & ERTALYTE - 210° F. MAX. SERVICE TEMP) |
| 33 | 1 | -- | -- | -- | GUIDE BEARING ASSEMBLY (316L S.S. & ERTALYTE - 210° F. MAX. SERVICE TEMP) |
| 34 | 1 | -- | -- | -- | 5" DIAL THERMOMETER W/ 1/2" NPT CONN. & 9" LG. STEM (20°F. - 240°F.) |
| 35 | 4 | 1 1/2" SCH. 40 | 304 S.S. | -- | LEG BRACE |

## NOZZLE SCHEDULE

| ITEM # | QTY. | STUB MTL | STUB SA # | FLANGE MTL | FLANGE SA # | SIZE / THICK | RATE | DESCRIPTION |
|---|---|---|---|---|---|---|---|---|
| A | 1 | 316L S.S. | -- | -- | -- | 24" DIA. | -- | MANHOLE ASSEMBLY WITH SUPPORT ARM, HINGE, & NITRILE GASKET |
| B | 1 | 316L S.S. | -- | -- | -- | 3" | -- | #14 MPW TRI-CLAMP FERRULE |
| C | 4 | SCH. 40 304 S.S. | 312 | -- | -- | 2" | -- | JACKET THREADED PIPE NIPPLE |
| D | 1 | SCH. 10 316L S.S. | -- | -- | -- | 4" X 6" | -- | 3 1/2" X SCH. 10 PIPE STUB W/ 6" 304 S.S. TWIST PIN MOUNTED BAYONET VENT ASSEMBLY |
| E | 2 | 316L S.S. | -- | -- | -- | 3" | -- | 14 WLMP TRI-CLAMP FERRULE W/ ECOLAB SB-18-3, 316L S.S. 2 1/2" DIA. SINGLE SPRAY BALL W/ 1 1/2" TRI-CLAMP END (40 GPM AT 25 PSIG) |
| F | 4 | 316L S.S. | -- | 316L S.S. | -- | 4" X 3" | -- | 14 WLMP TRI-CLAMP FERRULE W/ REMOVABLE NO FOAM INLET |
| G | 2 | 316L S.S. | -- | -- | -- | 3" | -- | 14 WLMP TRI-CLAMP FERRULE |
| H | 1 | 316L S.S. | -- | -- | -- | 6" X 3" | -- | L14 AM7 TRI-CLAMP FERRULE W/ SHAFT SEAL & (1) O-RING - (3) SPARE O-RINGS INSTALLED ON SHAFT ABOVE SEAL |
| J | 1 | 316L S.S. | -- | -- | -- | 1 1/4" 18 NEF | -- | RECORDER WELL (TAYLOR #26P397 OR ANDERSON #41247) |
| K | 1 | 316L S.S. | -- | -- | -- | -- | -- | ROSEMOUNT TANK SPUD (1199-0061-0002) |
| L | 1 | NYLON | -- | -- | -- | 1" DIA. | -- | VENT / LEAK DETECTOR |
| M | 1 | 316L S.S. | -- | -- | -- | 1/2" NPT | -- | #1300 INDICATING WELL |
| N | 1 | 316L S.S. | -- | -- | -- | 2" | -- | 14 MPHT TRI-CLAMP FERRULE |

T11-01 SEAL

UM W

CERTIFIED BY
WALKER STAINLESS EQUIPMENT COMPANY LLC
NEW LISBON, WI

| | | | | | |
|---|---|---|---|---|---|
| VESSEL | --- | PSIG MAWP AT | --- | °F. | |
| MIN. DESIGN METAL TEMP. | --- | °F. AT | --- | PSI | |
| JACKET | 75 | PSIG MAWP AT | 320 | °F. | |
| MIN. DESIGN METAL TEMP. | -20 | °F. AT | 75 | PSI | |
| SERIAL NO. | WEP-402395-10 | YEAR | | | |
| CAPACITY | 4000 GALLON | MAT'L | 316L S.S. | | |
| MODEL | PZ-CB-CR | DWG. | WEP-402395-10-1A.dwg | | |

VESSEL NON-CODE: ATMOSPHERIC AT 200 DEG. F.

WALKER ENGINEERED PRODUCTS

## LABEL SCHEDULE

| ITEM | PART # | QTY. | DESCRIPTION | LOCATION |
|---|---|---|---|---|
| L1 | | 1 | ASME NAME TAG | 3" BELOW MANWAY ON WRAP |
| L2 | | 1 | WALKER DECAL | NEAR NAME TAG |
| L18 | GF991-18 | 1 | AIR OUT TANK | ON MANWAY |
| L27 | H0991-27 | 1 | HOT SURFACES | NEAR HTS FITTINGS |
| L29 | RP991-29 | 1 | ROTATING PARTS | ON MANWAY |

## STANDARD INFORMATION

ASME: YES; PER ASME SECTION VIII - DIVISION 1, 2017 EDITION - JACKET ONLY

DESIGN PRESSURE & TEMP.: VESSEL: ATMOSPHERIC PRESSURE AT 200°F. - NON CODE
JACKET: **RATED FOR 75 PSIG AT 320°F. / -20°F. - UM CODE STAMPED**

HYDRO TEST AMBIENT: VESSEL: NONE
JACKET: 250 PISG

CORROSION ALLOWANCE: NONE

PASSIVATION REQ'D: NO

SHOP TOLERANCE: ±1/8" , ±2° FOR LOCATION, & ±1/2° FOR LEVELNESS

RADIOGRAPH: NONE

N.D.E.: LIQUID PENETRANT LEAK TEST OF ALL VESSEL WELDS IN PRODUCT CONTACT AREAS

P.W.H.T.: NONE

TANK CONTENTS: -- | VISCOSITY: 2500 CPS

SP. GR.: 1.2 | DEGREE OF AGITATION: GENTLE

APPROX. EMPTY WEIGHT: 7500 lbmass

**FINISH: INTERIOR: SURFACES - #4 SANITARY FINISH (3A STANDARD - Ra RANGE 23-32)**
**WELDS - GROUND & POLISHED - (3A STANDARD - Ra RANGE 23-32)**
**EXTERIOR: SURFACES - #4 INDUSTRIAL FINISH (Ra RANGE 33-43)**
**WELDS - GROUND & POLISHED - INDUSTRIAL FINISH (RA RANGE 33-43)**

**EXTERIOR: WELDS - STRIPE BUFFED**
***DENOTES THE WELD FINISH FOR THE AREAS MARKED WITH AN ASTERISK**

CRATING INSTRUCTIONS: SADDLES

REFERENCE DRAWINGS:

**SPECIAL NOTES:**

1. DIMENSIONS, UNLESS OTHERWISE INDICATED ARE NOMINAL AND STANDARD SHOP TOLERANCES ARE TO BE EXPECTED. MEASUREMENTS FOR ANY FIELD ATTACHMENTS SHOULD BE VERIFIED ON SITE BY OTHERS BEFORE FABRICATION OF THE ATTACHMENTS.
2. IF USED IN CONTACT WITH MATERIALS CONTAINING SALT, CHLORIDES OR OTHER CORROSIVE MATERIALS, THE CORROSION RESISTANCE OF THIS EQUIPMENT IS NOT THE RESPONSIBILITY OF WALKER STAINLESS EQUIPMENT COMPANY.
3. ALL WELDS TO BE CONTINUOUS & FULL PENETRATION UNLESS SHOWN OTHERWISE.
4. EXPOSED INSIDE EDGES OF NOZZLES OR MANHOLES SHALL BE SMOOTH & CORNERS SHALL BE CHAMFERED OR ROUNDED.
5. IT IS THE RESPONSIBILITY OF THE USER TO INSURE THAT THE VESSEL IS ADEQUATELY VENTED TO PREVENT PRESSURE AND OR VACUUM BUILDUP EXCEEDING DESIGN CONDITIONS
6. 1/4" DIA. WEEP HOLE IN ALL SECTIONS OF REINFORCING COLLARS.
7. UNLESS OTHERWISE NOTED ON DRAWING, NOTIFY ENGINEERING IF A NOZZLE 3" PIPE SIZE OR SMALLER CROSSES OR IS WITHIN 1/2" OF A WELD SEAM.
8. JACKET IS DESIGNED FOR HEATING WITH STEAM OR HOT WATER & COOLING WITH GLYCOL OR CHILLED WATER.

| REV. DATE | ISSUE | REVISION DESCRIPTION | APP'D BY |
|---|---|---|---|
| 7/24/18 | 2 | LOAD CELLS WERE 9" SQUARE W/ (4) 6 1/2" SPACED HOLES. | THA |
| 06/06/18 | 1 | HTS WAS AT 270°. LOAD CELLS ROTATED 45°. ADD FITTING "N". OUTLET HEIGHT WAS 16". ADD #117 IN TITLE BLOCK. TOOK -20 OFF DRAWING. ADD LEG BRACES. | THA |

NO. REQ'D 1 SERIAL NO WEP-402395-10

# WEP-402395-10-THA

APPROVED FOR CONSTRUCTION
BY THA DATE 07/26/18

UM A.S.M.E.

| ROUTING |
|---|
| FILE |
| FABRICATOR |
| QUALITY CONTROL |
| HEAD DEPT. |
| PLASMA & BRAKE |
| PARTS DEPT. |
| GRIND |
| CARPENTER |

WALKER ENGINEERED PRODUCTS

SCALE: | DRAWN BY: KSMITH
DATE: 4/12/2018 | REVISION: 2

4,000 GALLON PZ-CB-CR CONE BOTTOM PROCESSOR TANK #117

JOB: RWS / PROTENERGY NATURAL FOODS
CAMBRIDGE, MD 21613

DRAWING NUMBER: WEP-402395-10-1A.dwg

**NOTE! DO NOT SCALE THIS DRAWING!**