THERMO BLACK CLAWSON INC.

A Thermo Fibertek company

HYDRAPURGE™ II EXTRACTOR-DETRASHER

Installation, Operation, Maintenance, and Service Parts
MODELS: 42-5000, 33-3000, 24-950

Deliver manuals to:

Attention:

Prepared for:

Mill:

Customer order number: Number of manuals:

Shop order number Serial number

Read this manual carefully to learn how to operate and service your equipment correctly; failure to do so could result in personal injury or equipment damage. Keep this manual readily accessible and legible to anyone doing maintenance on or operating this equipment.

Thank you for purchasing a Thermo Black Clawson product.

Contents

Figures and tables are italized

Manual Overview 6
1.0 SAFETY 7
1.1 Safety Introduction 7
Safety Steps 8
Safe Maintenance Overview 9
1.2 Safety Guidelines 10
Safety Guidelines 10
Hydrapurges/Detrashers 13
Special Safety Considerations for the Hydrapurge 13
1.3 Safety Practices 14
Laminated Safety Sign 14
1.4 Safety Signs 15
2.0 EQUIPMENT IDENTIFICATION 17
2.1 Nameplate 17
3.0 GENERAL INFORMATION 18
3.1 Equipment Detail 18
Serial Numbers 18
Renewal Parts 18
3.2 Description 19
Hydrapurge Connections 20
Hydrapurge II Detrashing System 21
Capacity 22
Equipment 22
3.3 Specifications 23
Standard Specifications 23
3.4 Features 24
Rotor 24
3.5 Accessory Equipment 25
Selectpurge 25
4.0 SHIPMENT CHECK 26
4.1 Shipment/Receiving 26
Carrier 26
Shipping Papers 26
Check-Off 26
Unloading Patterns 26
Wooden Boxes (Crates) 26
Bracing Material 26
4.2 Unloading/Handling 27
Lifting, Unloading, and Moving Unit 27
Proper Lifting Method 27
Improper Lifting 28
5.0 STORAGE 29
5.1 Unit Storage 29
6.0 INSTALLATION 30
6.1 Safety Precautions 30

Contents

Figures and tables are italized

6.2 Pre-Installation 31
Foundation 31
Equipment Placement 31
Lifting Equipment 31
Electrical Requirements 31
Piping 31
Leveling Instruments 32
Elevation 32
Containment of Heavy Rejects Flow 32
6.3 Installation 33
Customer Supply 33
Foundation Surfaces 33
Anchor Bolt Pockets 33
Shim Packs 33
Anchor Bolts 33
Recommended Anchor Bolt Method 34
Leveling the Unit 34
Grout 34
6.4 Equipment Set-Up 35
Service Connections 35
Connection to the Furnish Pulper 36
Illustration of Other Service Connections 36
Preferred Hydrapurge II Detrashing System 39
Alternative A 40
Illustration of Alternative A 40
Alternative B 41
Illustration of Alternative B 41
Alternative C 42
Illustration of Alternative C 42
Alternative D 43
Illustration of Alternative D 43
Overpressurization 44
Pneumatic Pressure Transmitter and Switch 44
Electronic Pressure Transmitter and Switch 45
Containment of Rejects Flow 45
6.5 Selectpurge Dewatering Drum 46
Dewatering Conveyors 46
Guarding 46
Guard Locations 47
7.0 OPERATION 48
7.1 Pre-Checkout 48
7.2 Method of Operation 50
Phase I - Extraction 50
Phase IA - Option 50
Phase II - Washing 50

Contents

Figures and tables are italized

Phase III - Light Contaminant Reject 50
Phase IV - Heavy Contaminant Reject 51
Hydrapurge II Operating Sequence 51
Typical Operating Cycle 52
7.3 Operating Variables 53
Consistency 53
Temperature 53
Furnish 53
Contaminants 53
Ragger 53
7.4 Control Guidelines 54
Power Supply 54
Main Power Disconnect 54
Operation Safety Precaution 54
Program Alteration 54
Hardwired Circuitry 55
Safety Recommendation for Maintenance Personnel 55
Control Panels 55
Education and Knowledge Lead to Safety 56
7.5 Operation 57
Control Panel 57
Normal Start-Up 57
Normal Shut-Down 58
Emergency Shut-Down 58
7.6 Adjustments 59
7.7 Avoiding Over Pressurization 60
Causes of Over Pressurization 60
Maximum Hydrapurge Pressure 60
8.0 MAINTENANCE 61
8.1 Routine Maintenance 61
Periodic Inspection 61
Preparing for a Maintenance Check 61
Components Requiring Routine Maintenance 62
8.2 Troubleshooting 63
Troubleshooting Guide 63
8.3 Service Instructions 64
Safety Guidelines 64
Rotor and Extraction Plate 64
Signs of Wear 64
Preparing for a Maintenance Check 64
Opening the Unit 65
Rotor Adjustment 65
Cartridge Bearing Adjustment 65
Closing the Unit 66
Inspection Port 66

Contents

Figures and tables are italized

Accessing Rotor and Extraction Plate Area *67*
Rotor Removal Illustration *68*
Plugging 68
8.4 Packing Box 70
Packing Box 70
Packing Box Water 70
Water Flow 70
Lantern Rings 70
Replacing Packing 70
Packing *71*
Installing Packing Gland 71
8.5 V-Belt Drive 72
Misaligned Belts *72*
Sheave Alignment *73*
Belt Tension *74*
V-Belt Drive 75
8.6 Lubrication 76
Lubrication Points *76*
9.0 SERVICE PARTS 77
9.1 Recommended Parts 77
Recommended Spare Parts *77*
10.0 CUSTOMER INPUT 78
10.1 Quality Assurance Through Customer Input 78
11.0 GLOSSARY 79

Manual Overview

This manual is for general information and guidance. For specific information concerning parts or items, refer to the certified drawings of the equipment.

Your Thermo Black Clawson unit will provide many years of dependable service when installed, operated, and maintained according to our recommended procedures. The instructions in this manual are recommended procedures for installing, operating, and maintaining your unit. Correct installation of the unit is critical. Reasonable operation and maintenance will not compensate for poor installation.

All information, illustrations, and specifications in this manual are based on the latest information available at the time of publication.

Drawings in this manual are only sketches that exist for no other purpose other than to provide a visual reference for the text within this manual. The drawings in this manual are not to be used for construction purposes.

It is the responsibility of the purchaser of this equipment to make sure that operators, maintenance personnel, and anyone else involved with this equipment is aware of this manual, has easy access to this manual, and has read and understands the contents of this manual. It is also the purchaser's responsibility to keep this manual in legible condition.

WE RESERVE THE RIGHT TO MAKE CHANGES AT ANY TIME WITHOUT NOTICE.

Thermo Black Clawson Inc.

605 Clark Street, Middletown, OH 45042-0160

Phone 1-513-424-7400

North America emergency 24-hour service: 1-800-448-5422

Global emergency 24-hour service: 1-513-391-0881

Copyright 1999 Thermo Black Clawson Inc.

1.0 SAFETY

1.1 SAFETY INTRODUCTION

This manual is a guide for safe and trouble-free installation and operation of your Thermo Black Clawson equipment. Follow the recommendations in this manual to ensure the safety of your personnel along with the dependable operation of your Thermo Black Clawson equipment. Your particular situation may require additional procedures and safety measures.

You--the purchaser of this equipment--are responsible for ensuring that your personnel are trained in the safe operation and maintenance of this equipment. We recommend that your personnel obtain refresher sessions covering safety, operation, and maintenance procedures periodically throughout the life of your Thermo Black Clawson equipment. **Note**: Thermo Black Clawson offers qualified field service instructors to help train your operators and maintenance personnel.

FOLLOW THE SAFETY INFORMATION IN THIS MANUAL

RECOGNIZE SAFETY INFORMATION. The triangle to the left with the exclamation mark within it is the international safety alert symbol. When you see this symbol on your equipment or in this manual, be alert to the potential for personal injury. Follow recommended precautions and safe operating practices.

UNDERSTAND SIGNAL WORDS

DANGER

Danger indicates an imminently hazardous situation which, if not avoided, will result in death or serious injury. *Danger* is to be limited to the most extreme situations.

WARNING

Warning indicates a potentially hazardous situation which, if not avoided, could result in death or serious injury.

CAUTION

Caution indicates a potentially hazardous situation which, if not avoided, may result in minor or moderate injury.

NOTE: Notes place special emphasis on information.

Safety Steps

- Carefully read all safety messages in this manual and on your machine safety signs.
- Do not operate equipment until it has been fully integrated into the system.
- Do not perform service or maintenance work on this equipment until all sources of energy have been locked out and any stored energy has been relieved--unit is at zero mechanical state (ZMS).
- Keep safety signs in good condition, clean, and legible.
- Replace missing or damaged safety signs.
- Learn how to operate the machine and how to use controls properly.
- Do not let anyone operate the machine without instructions.
- Keep your machine in proper working condition.
- Do not modify the equipment without written authorization from Thermo Black Clawson. Unauthorized modifications may impair the function, shorten the machine life, and/or render built-in safety features useless.
- Inspect the unit before starting and make sure that the following conditions are met:

    - All guards and covers are in good condition and fastened in place.

    - No parts are loose, worn, damaged, or missing.

    - All personnel are clear of equipment.

Safe Maintenance Overview



- Keep equipment area clean and dry.
- Keep all equipment parts in good condition and properly installed.
- Understand service procedures before you do the work.
- Replace worn, broken, or missing parts.
- Do not operate damaged equipment--fix damage immediately.

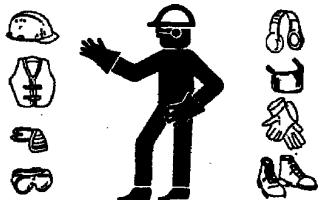

- Wear close fitting clothing and safety equipment appropriate to the job.



- Consult applicable federal, state, and local codes for proper installation and guarding.

1.2 SAFETY GUIDELINES

Do not use or service this equipment until you read and understand the guidelines and instructions below and throughout this manual. If you have any questions, contact your supervisor.

Safety Guidelines

HAZARD	WHAT COULD HAPPEN	PREVENTION
Stock leaks from pipe connections, blind flanges, body joints, open access doors, etc. Water leaks from shower water, inlet dilution water, or other water sources.	**WARNING** Skin contact with stock might result in chemical or thermal skin reaction, such as skin irritation or scalding.	Lock out unit. Follow shut down and start up guidelines. Be sure that you have locked out all energy sources. Tighten or replace loose, leaking connections.
Valves - air and electrically operated.	**WARNING** Amputation or severe injury to fingers, hands, or arms, could result.	Lock out valves and their energy sources and ensure that equipment is at zero mechanical state (ZMS). **NOTE: Controls may not be independent.** Extreme care must be used when isolating power sources. Be sure of what will shut down when energy sources are locked out. Make sure that other automatic equipment connected to source will also shut down. Do not insert fingers, hands, arms, head, or and other body parts into such devices.
Visually inspecting a plugged pipe.	**WARNING** Severe injury to face, eyes, or limbs.	Never look into a plugged pipe. A discharge could injure you.

HAZARD	WHAT COULD HAPPEN	PREVENTION
Motor/drive units	**WARNING** Amputation or severe injury to fingers, arms, or hands could result.	Do not expose electrical units to water. Shut down and lock out unit before cleaning or servicing. Do not operate the unit with covers, hoods, or guards removed. Note: Manual rotation of rotating elements may be required with enclosures removed. Be sure all personnel are clear of unit before manually rotating rotor.
Exceeding design pressure of unit.	**WARNING** Seals, gaskets, or the vessel might fail and cause severe personal injury.	Know the correct design pressure of the equipment. Refer to the manual and the certified drawings. Adhere to proper operating procedures.
Discharged debris from trash chamber.	**WARNING** Cuts, abrasions, skin irritation, and scalding could occur.	Wear eye protection and protective clothing.
V-belts/sheaves, drive shafts	**WARNING** Amputation or severe injury could occur.	Do not operate unit with guards removed. Be sure unit is shut down and lock-outs are in place before installing guards that have been removed.
Confined space	**WARNING** Severe injury or death could occur.	Do not enter the Hydrapurge.

HAZARD	WHAT COULD HAPPEN	PREVENTION
Manual dump valve (hand operated contaminant discharge valve)	**WARNING** Cuts, abrasions, skin irritation, and scalding could occur.	Don't stand where you can be splashed. Wear eye protection and protective clothing. Location of valve is difficult to position for easy access by personnel to open or close the valve. Additional piping may be required to dump contaminants into dumpster Be sure valve placement does not require personnel to be in dumpster to open or close valve.
Automatic dump valve (air or electrically operated contaminant discharge valve)	**WARNING** Cuts, abrasions, skin irritation, and scalding could occur.	Don't stand where you can be splashed. Wear eye protection and protective clothing. Signs should warn of automatic dumping and instruct not to enter port until unit is shut down, brought to zero mechanical state, locked out, and tagged. Outlet from valve must be guarded to prevent anyone from reaching into dump port. Valve is normally closed when the unit is in operation. At end of cycle, valve will open and automatically dump contaminants with no warning. This discharge port may also blind-over or clog.

Hydrapurges/Detrashers

Special Safety Considerations for the Hydrapurge

- Piping systems which permit stock bypass and (where applicable) pressure release valves
- Never work on an operating unit

When it becomes necessary to open an enclosed unit, do the following:

- Close out/divert lines
- Make sure pressure is relieved (where applicable)
- Activate and post lock-out devices
- De-activate remote controlled valves
- Completely drain and clean unit
- Take extreme care when dismantling
- Use mechanical assists when working on the unit
- Never put any part of your body into the machine

Each time a unit is opened for maintenance, make a careful inspection of the internal components. Correct any wear or damage problems that you might discover to avoid possible future component failure or possible unsafe operation.

- Follow start up procedures carefully.
- Do not operate incandescent light bulbs as a proximity sensor. The in-rush current will cause an overload.
- Do not operate a proximity sensor from a wall outlet without a load. This is considered a dead short and can cause catastrophic damage to non short-circuit protected sensors.
- Do not directly operate a motor with a proximity sensor. The in-rush current can cause an overload. Always use a motor starter, relay, or other appropriate device

1.3 SAFETY PRACTICES

Post the laminated safety sign (provided by Thermo Black Clawson and pictured below) in plain view on or near the equipment at installation and keep it clean.

SAFETY INSTRUCTIONS

STOCK PREPARATION AND PULP MILL EQUIPMENT

Failure to follow these safety instructions may result in serious personal injury or death.

DO NOT PROCEED until you READ and UNDERSTAND these instructions.

1. READ and UNDERSTAND the machine's instruction/operation manual and ALL applicable OSHA regulations (29CFR1010.261).

2. FOLLOW the SHUT DOWN PROCEDURE in the manual.

3. The machine must be brought to a ZERO MECHANICAL STATE and LOCKED OUT with YOUR PADLOCK BEFORE any maintenance, inspection, cleaning, adjusting, or servicing is performed.

a) The MOTOR MAIN POWER DISCONNECT switch must be LOCKED OUT.

b) CHECK DISCONNECT. Try to start motor BEFORE proceeding further.

c) ALL SOURCES OF POWER AND FLOW OF MATERIAL must be SHUT OFF including BLEED OFF of pressure and LOCKING OUT ALL **pneumatic, hydraulic, electrical circuits, steam systems, chemical systems, gas systems, and flows of material stock.**

NOTE: See the glossary in the equipment manual to obtain the definition of zero mechanical state.

NEVER REMOVE another person's lockout (padlock) or tag.

DO NOT assume the machine is locked out. ALWAYS check yourself.

NOTE: If services are not independent of the main supply, DO NOT PROCEED--contact your supervisor.

d) Place or attach a "DANGER - PERSONNEL WORKING" sign near lockout.

e) BLOCK any rotating elements to prevent accidental rotation.

4. DO NOT ENTER vessel or unit unless you have at least ONE OTHER PERSON OUTSIDE the unit at all times. Certain vessels require use or harness, gas masks, and other specialized safety equipment.

5. Upon completion, follow the START UP PROCEDURES in this manual.

6. NEVER START the machine UNLESS

a) All personnel are clear of the machine. b) All doors and hatches are closed.

c) All guards and covers are in place.

If you have any questions, contact your supervisor.

Middletown, Ohio 45042-2117 USA

THERMO BLACK CLAWSON INC.

A Thermo Fibertek company

Toll Free 24 Emergency Service: 800-448-5422

Laminated Safety Sign

1.4 SAFETY SIGNS

Thermo Black Clawson furnishes safety signs with each piece of equipment. These signs are factory installed and should remain on the unit for the life of the machine and should be kept clean and legible. Do not remove the signs unless replacement signs are in hand and installed immediately after the old signs are removed. The following safety signs are attached to the unit.

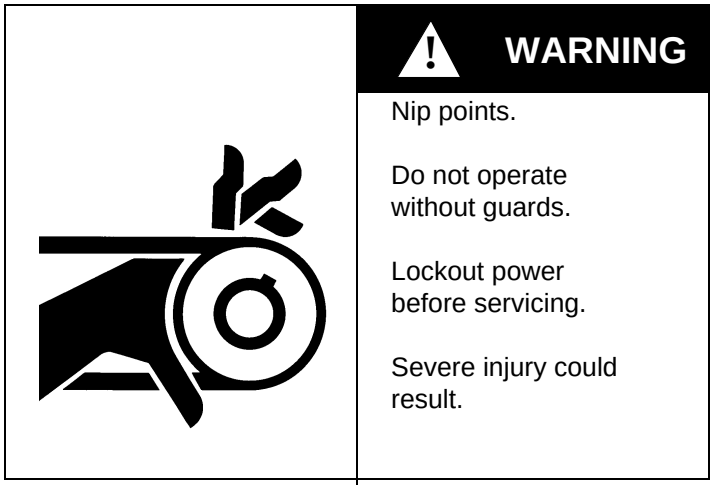

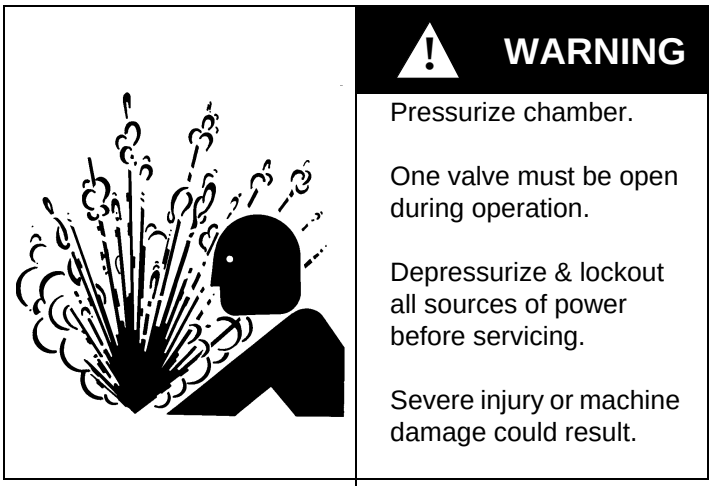

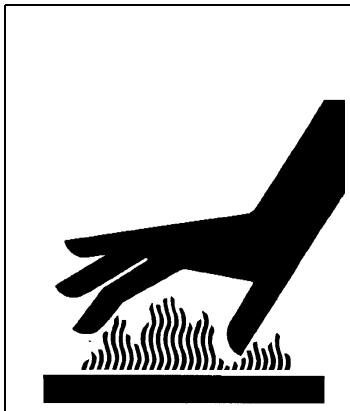

WARNING

Hot surfaces.

Do not touch.

Severe injury
could result in injury.



DANGER

Remote operation. Hazard-
ous voltage.

Lockout all sources of
power before servicing.

Do not operate without
guards.

Severe injury or death will
result.

2.0 EQUIPMENT IDENTIFICATION

2.1 NAMEPLATE

Product identification numbers include the serial number, job or shop order number, and model number. They are provided to help identify this unit if it needs service.

Thermo Black Clawson needs these numbers when you order parts.

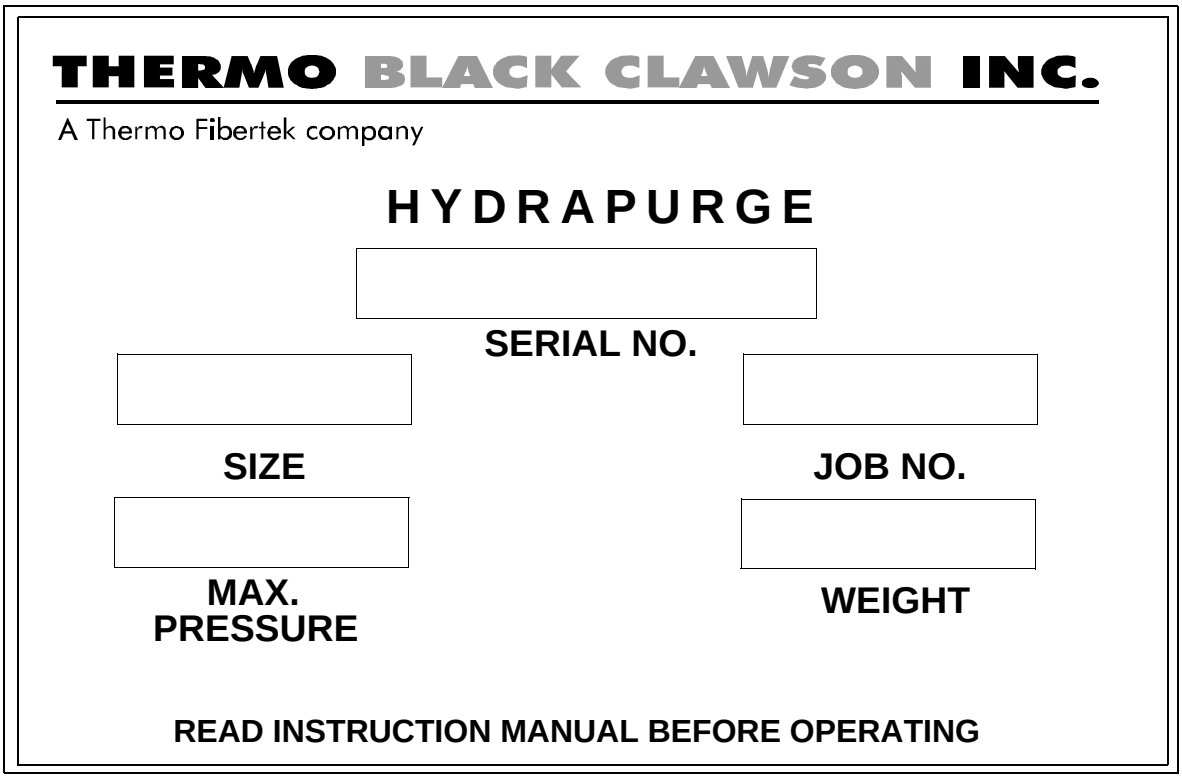

3.0 GENERAL INFORMATION

3.1 EQUIPMENT DETAIL

Your Thermo Black Clawson unit is designed to give trouble-free operation with minimum maintenance. However, certain precautions and procedures must be observed in handling, installing, and servicing the unit to obtain optimum performance.

The information in this manual should cover most situations. Should questions arise that are not covered in this manual, contact us for additional information:

Customer Service

Thermo Black Clawson Inc.

605 Clark Street, Middletown, OH 45042-0160

Phone 1-513-424-7400

North America emergency 24-hour service: 1-800-448-5422

Global emergency 24-hour service: 1-513-391-0881

Serial Numbers

The serial numbers is on the nameplate and the certified drawings. When inquiring about service or maintenance problems, always provide the serial number, size, and type of unit.

Renewal Parts

Orders for renewal parts should state the serial number(s) and include the item number, description, and part number shown on the parts list of the certified drawings. **Part numbers are not specified in this manual.** Refer to your certified drawings for part numbers.

3.2 DESCRIPTION

The Thermo Black Clawson Hydrapurge II Detrasher is designed to remove plastics, styrofoam, and other lightweight contaminants, as well as heavy debris, directly from the waste paper pulper tub. The contaminants are removed from the tub before they break down small enough to pass through the holes of the extraction plate. With constantly increasing amounts of plastic and other types of contaminants in waste paper furnish, the Hydrapurge II Detrasher prevents contaminant build-up in the pulper tub that causes loss of production, wasted power, excessive downtime for cleanout, and increased wear. The Hydrapurge II Detrasher is a proven, reliable means of maintaining full capacity operation in waste furnish pulpers. See “Hydrapurge II Detrashing System” on page 21.

A side stream is taken from the pulper tub to the Hydrapurge II. The rotor processes the fiber in this stream, sending good fiber downstream through the holes in the extraction plate. Contaminants build up in the HP II body until it becomes necessary to wash and discharge the rejects to a dewatering drum.

The rotor is mounted on a heavy-duty pedestal drive shaft with a cartridge bearing arrangement and V-belt drive.

The extraction plate is mounted behind the rotor and contains perforations sized for particular applications.

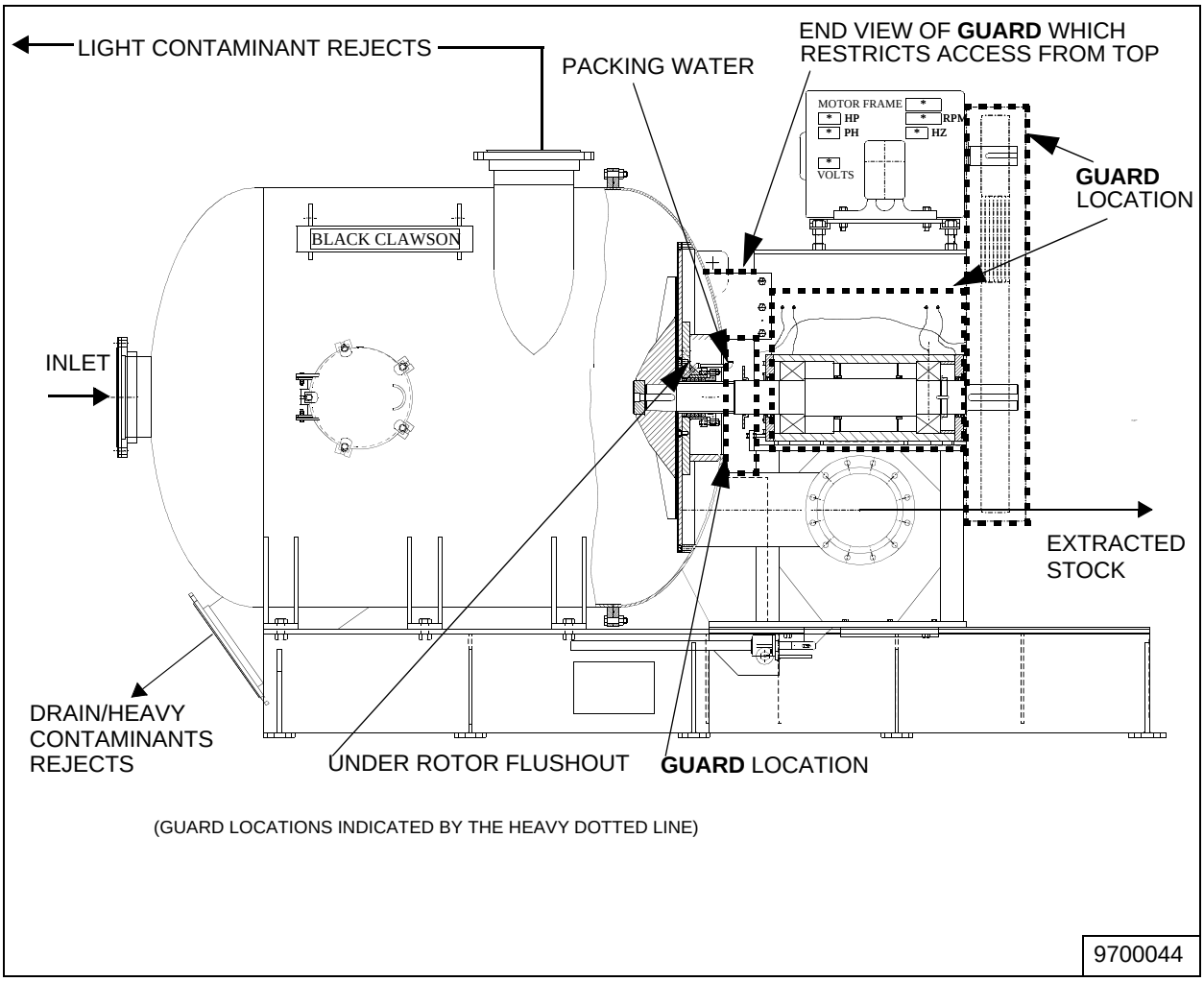

Hydrapurge Connections

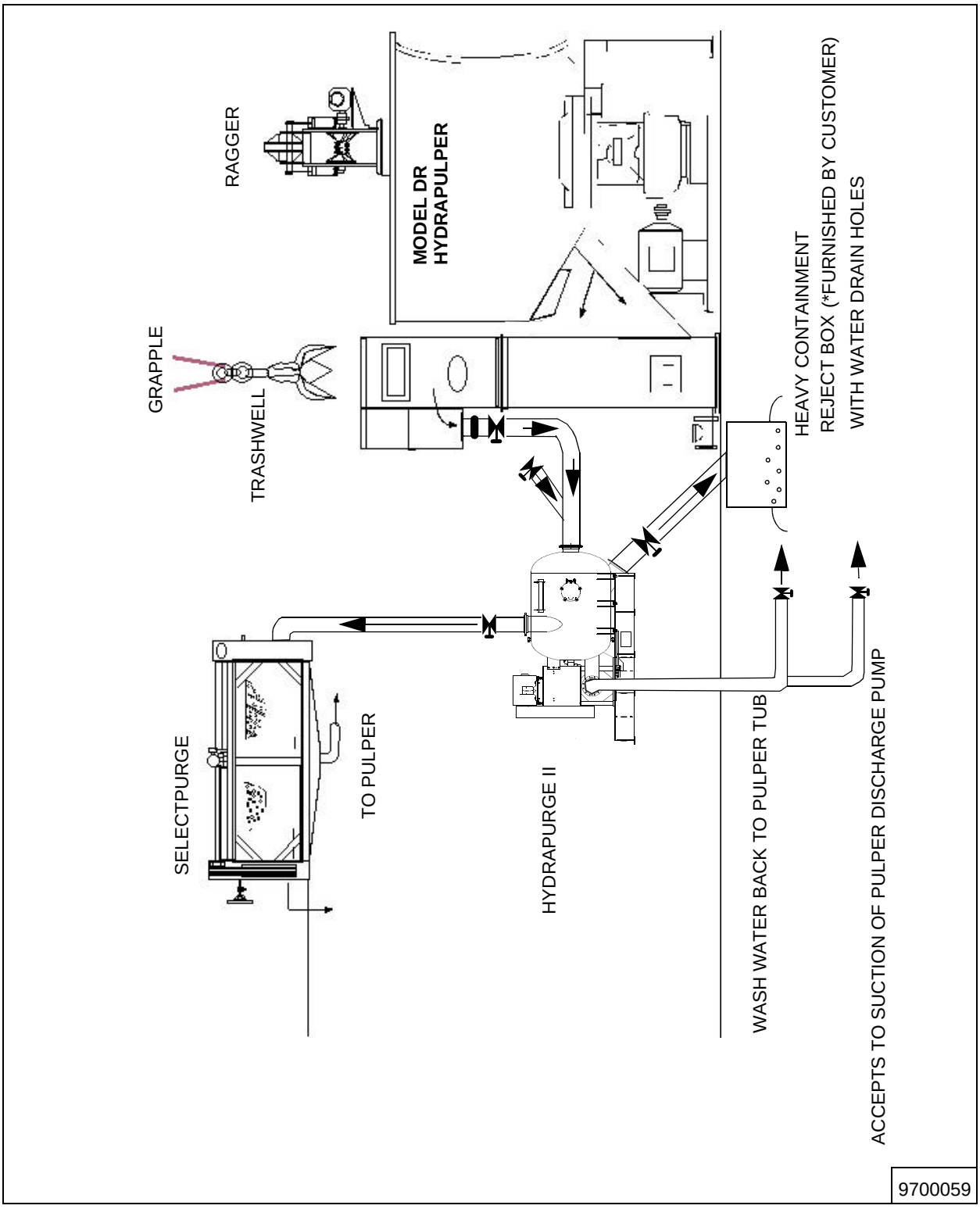

Hydrapurge II Detrashing System

Capacity

The total cycle is typically from 12 to 14 minutes, allowing 4 to 5 cycles per hour. Depending on the model size of the Hydrapurge II and the size of the furnish pulper, the amount of flow processed and detrashed by the Hydrapurge II can be calculated. Typically, the Hydrapurge II will process one Hydrapulper tub volume every 30 minutes. The amount of contaminants removed depends on the condition of the incoming furnish to the pulper, but can be as much as 1 cubic yard an hour in highly contaminated systems. Because the contaminants removed by the Hydrapurge II system are primarily plastics, wood, and other lightweight rejects, they are suitable for further dewatering.

Equipment

The Hydrapurge II is manufactured in three sizes: 24-950, 33-3000, and 42-5000. All three units have a rotor mounted on a heavy duty shaft and cartridge bearing pedestal drive arrangement. An extraction plate is mounted behind the rotor on the rear wall of the body. The extraction plate has perforations sized according to the particular application.

A side mounted inspection door is provided for internal viewing of the Hydrapurge II body **only after the unit has been shut down, brought to a zero mechanical state and locked out, and pressure relieved.**

The three Hydrapurge II sizes are used in conjunction with Selectpurge Model 3000, 4500, and 5000 respectively.

The system can be furnished complete with a control panel containing a programmable controller which sequences and times each phase of the complete cycle. A front-mounted monitor allows for quick and easy timing changes. An ammeter measures power loading and automatically initiates the wash and reject phases if the unit begins to overload from an unusually large amount of contaminants or wet strength.

3.3 SPECIFICATIONS

The specifications below are standard. Refer to your certified drawings to verify the specifications of your unit.

WARNING

Operating this equipment beyond the maximum pressure could cause seal, gasket, or vessel failures which could result in severe injury or death.

Standard Specifications

	Model 24 - 950	Model 33 - 3000	Model 42 - 5000
Rotor	24 inch Powr-Savr	33 inch Powr-Savr	42 inch Vokes
Rotor speed (RPM)	451	322	270
Extr. plate perforation diameter	3/8 inch	3/8 inch	3/8 inch
Motor	60 HP; 1,800 RPM	100 HP; 1,200 RPM	150 HP; 1,200 RPM
Unit volume - gallons / liters	400 / 1,500	850 / 3,200	1,400 / 5,200
Extraction capacity (tons per day)	35-50	50-75	75-100
Flow rate (average GPM)	400	700	1,200
Pulper capacity (tons per day)	350	600	1,000
Inlet flange (inches)	10	12	14
Extracted stock flange (inches)	6	8	12
Water flange (inches)	4	6	8
Lt. cont. discharge flange (inches)	10	12	14
Drain/heavy cont. discharge flange (inches)	12	14	16
Recirc. water flange (inches)	6	8	12
Maximum design pressure (PSI)	75	75	75
Shipping weight (pounds)	5,000	8,500	15,500
Operating weight (pounds)	7,000	15,000	27,200
Seal type	Wet-packing	Wet-packing	Wet-packing
Packing box water	1 GPM	1 GPM	1 GPM
Selectpurge model	3000	4500	5000
Rotor weight (pounds)	150	400	550

3.4 FEATURES

- Maintains full capacity operation in waste furnish pulpers, decreasing or eliminating down-time for cleanout.
- Removes plastic contaminants in large pieces, with little degradation.
- Largest volume of contaminants and lightweight plastics are removed at the operating floor level.
- Increased pulper throughput.
- Protects against tramp metal damage by providing heavy contaminant discharge valve.
- Simple operation, minimum controls required.
- Can be retrofitted to most existing waste paper pulping systems.
- Eases burden of downstream equipment by removing contaminants directly from the pulper tub.
- External rotor adjustment
- Extraction chamber and bearing stand one-piece design.

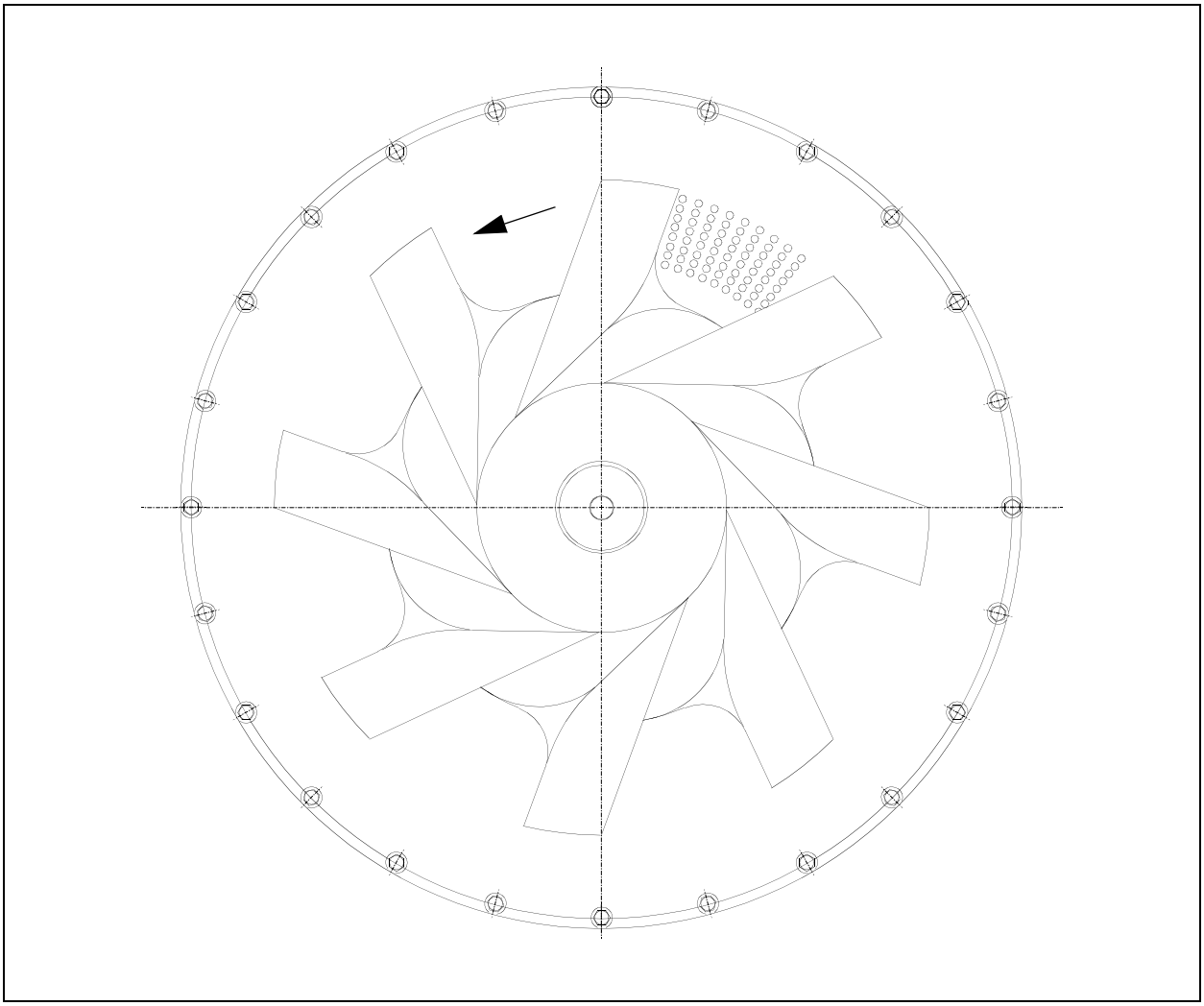

Rotor

3.5 ACCESSORY EQUIPMENT

Thermo Black Clawson offers a variety of peripheral equipment to use in conjunction with our secondary fiber processing equipment. Generally these products are sold as optional accessories. The Hydrapurge II can be used with either Thermo Black Clawson's Selectpurge dewatering drum or other dewatering conveyors, which Thermo Black Clawson can provide.

The Hydrapurge II bottom contaminant discharge valve is usually supplied by the customer. An interlocking device should also be installed to prevent an accidental discharge from the Hydrapulper to the Hydrapurge II when the Hydrapurge II contaminant discharge valve is open.

We recommend that you select a fail-close automatic valve for the Hydrapurge II bottom contaminant discharge valve and that you guard the valve to prevent anyone from reaching into the Hydrapurge body for any reason.

A plant utilities shut down will actuate all valves (open/close) and could result in an employee being injured or deluged from the batch being inadvertently dumped. Therefore, all valves should be fail-close and programmed to close upon shut down of the unit except for the light reject valve which should be fail-open.

Safety signs should be posted warning everyone that automatic equipment is in operation and the dangers involved. Additionally, people working with or around the equipment should receive periodic safety training warning of potential dangers and safe procedures.

Thermo Black Clawson offers complete system design or individual units to integrate into an existing system. Your local Thermo Black Clawson Sales Manager or our Systems Engineering Group is available to assist you with your specific application requirements.



Selectpurge

4.0 SHIPMENT CHECK

4.1 SHIPMENT/RECEIVING

Carrier

Thermo Black Clawson units and accessory equipment are shipped by truck.

Shipping Papers

One set of shipping papers is attached to the shipment in plain view to those unloading the unit. Another copy of the shipping papers was mailed to your receiving department.



WARNING

Verify weights shown on shipping papers with certified drawings and determine if your crane or hoist can lift the heaviest item safely.

Check-Off

During unloading, check-off parts from shipping papers. Report shortages to Thermo Black Clawson within 24 hours. File damage claim against transportation company within 24 hours.

Unloading Patterns

Trucks are generally unloaded from back to front. The crane operator must be sure of a clear lift or the piece being lifted may swing against other parts and cause damage.

Wooden Boxes (Crates)

Clamps, bolts, nuts, cap screws, eyebolts, and other small parts are shipped in one or more wooden boxes. **Do not store these boxes outdoors.**

Bracing Material

Leave wood blocks, steel strapping, and other bracing material in place until hoisting sling is in place and the piece is ready to be lifted.

4.2 UNLOADING/HANDLING

Lifting, Unloading, and Moving Unit

- Check to be sure that eyebolts and hooks are attached securely and have appropriate lifting rating.
- Straighten the sling as the slack is removed. Test by allowing the weight of the piece to be supported by the crane while the piece is not more than one or two inches above the truck bed.
- Lift pieces carefully and smoothly. With cast parts, the flanges will break next to the cored holes if pieces are jerked suddenly by the crane.
- Use properly sized rigging.
- All lifting and rigging must comply with federal, state, and local safety codes.

WARNING

Never stand underneath equipment that is being lifted. To do so is to risk severe personal injury or death.

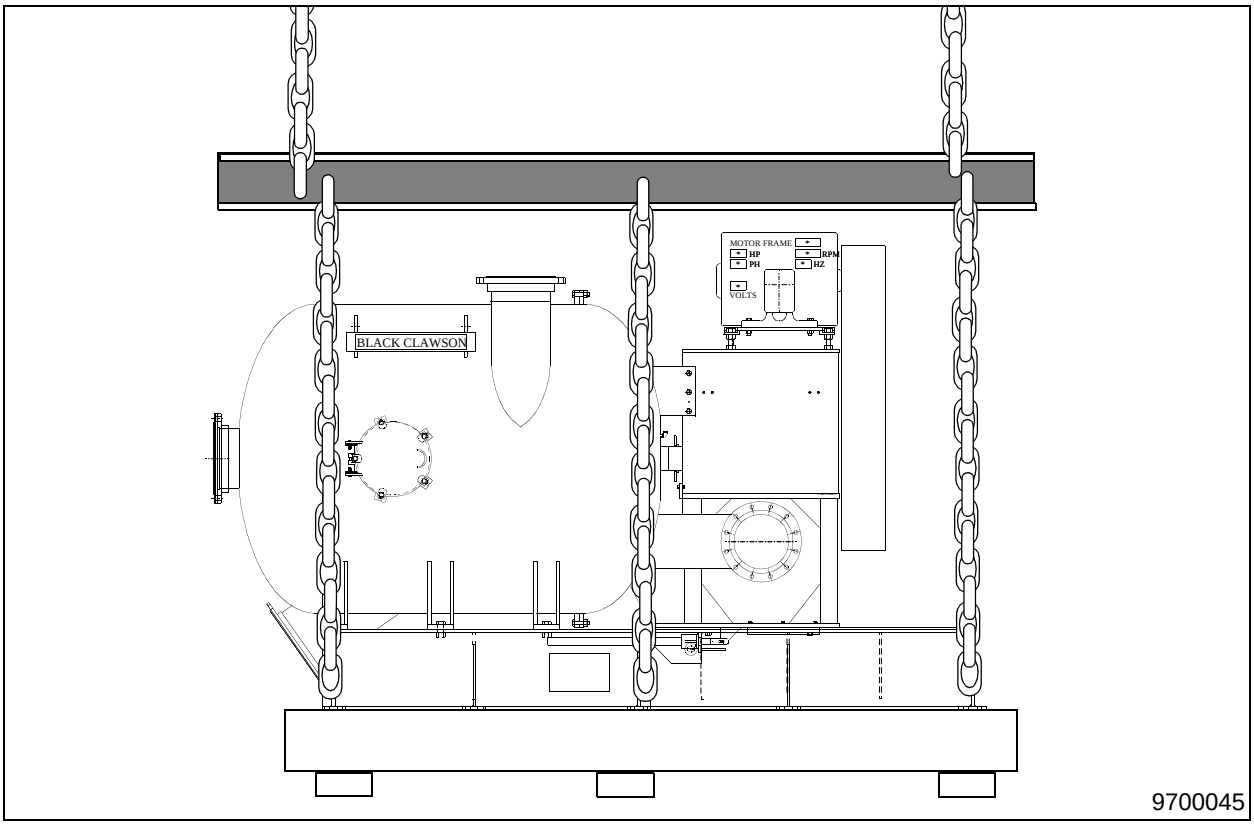

Proper Lifting Method

- To remove unit from skid or to move the unit into position when it is off the skid, use the lifting lugs located on the unit base.
- Use shipping weight as a guide to determine lifting requirements. Verify that lifting equipment has sufficient capacity.
- Do not lift unit by chaining or slinging around pipe connections or motor stand.
- Use a spreader bar to prevent damage to the unit when lifting.
- Pad any contact points between the tank and the chains or slings.

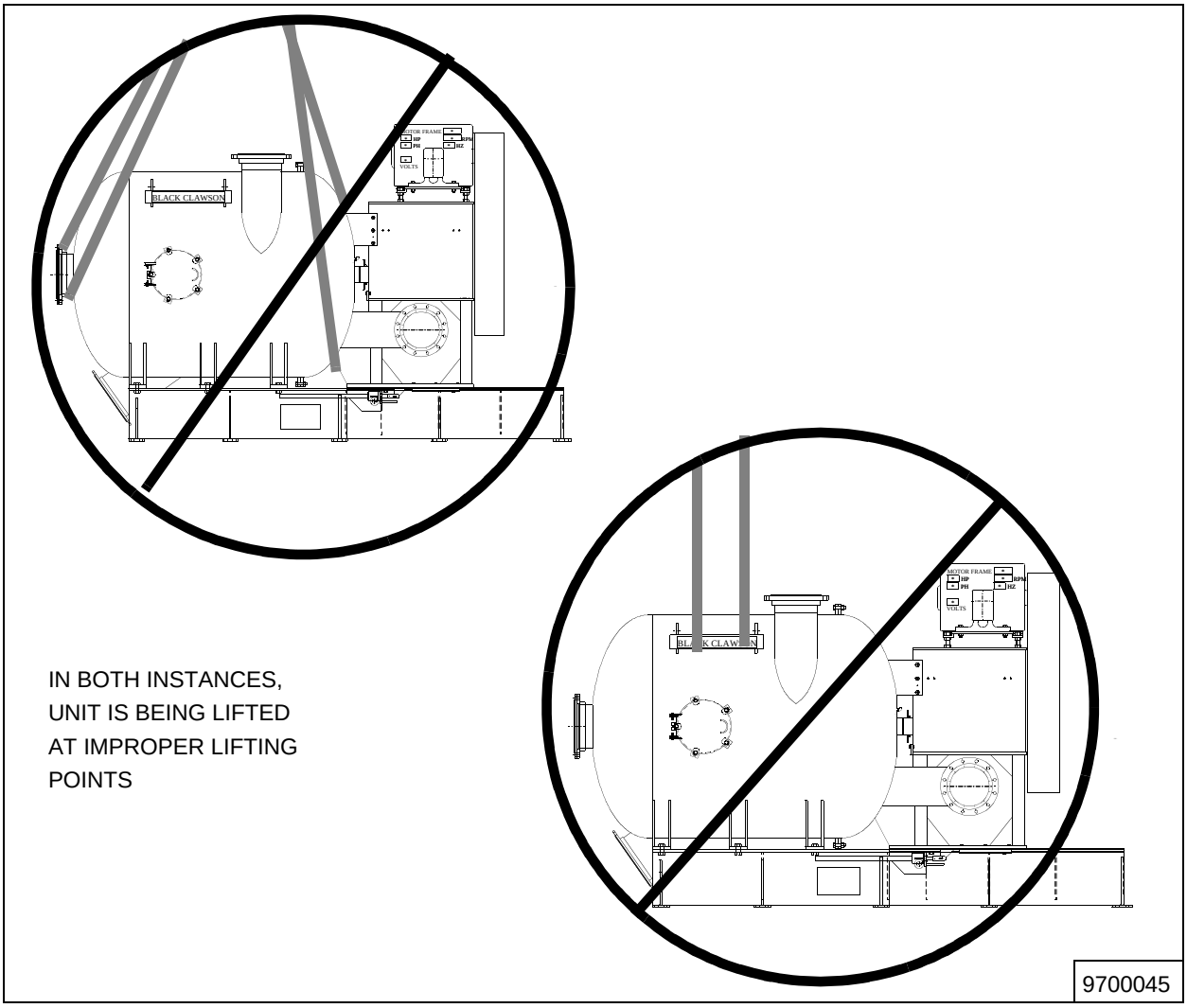

Improper Lifting

5.0 STORAGE

5.1 UNIT STORAGE

Take the following precautions to minimize potential damage to the unit if outside storage is planned:

- Cover equipment with waterproof covering.
- Do not allow water to accumulate in or on the unit, especially if the weather conditions approach freezing (32 degrees Fahrenheit) or below.
- Coat the mild steel extensions of the drive shaft with a rust inhibitor or rust prevention substance.
- Flood bearings with a non-oxidizing lubricant.
- Protect screw jack mechanisms, especially the exposed threaded rod, with a rust inhibitor or rust prevention substance.
- Do not store items such as valves, cylinders, switches, etc. outside.
- Consult the drive unit manual for any special storage requirements for the drive.

NOTE:

At the time of installation, all protective coatings must be removed carefully to prevent damage to the seals, etc. Bearings must be flushed and lubricated with lubricants that are clean and meet the specifications for the bearing application.

THERMO BLACK CLAWSON ASSUMES NO LIABILITY AS TO THE SPECIFIC STORAGE REQUIREMENTS FOR EQUIPMENT OR COMPONENTS.

6.0 INSTALLATION

6.1 SAFETY PRECAUTIONS

ATTENTION OPERATORS AND MAINTENANCE PERSONNEL! Read and make sure that you understand all of the safety information and correct procedures before using or servicing this equipment. This manual should be available to you at all times.

Do not modify the machine without authorization. Modifications could affect the function of the machine, shorten machine life, or render built-in safety features useless.

Never start the machine unless the following conditions are met:

- All personnel are clear of the machine.
- All doors and/or hatches are closed.
- All guards and covers are in place.

See *Operation* section for complete start-up procedure.

Do not exceed the maximum design pressure. Maximum design pressure of this unit is stated on the certified drawings.

Lock out machine before servicing. All energy sources and stock supply must be shut-off and locked out with your padlock before and during installation, maintenance, inspection, cleaning, or adjusting this unit. Unit must be at zero mechanical state (ZMS) before any service work is done.



WARNING

Never remove another person's lock-out (padlock) or tag.

Check disconnect. Try to start motor before servicing unit.

Bleed off pressure and lock out all pneumatic, hydraulic and steam systems, electrical circuits, chemical and gas systems, water, and stock flow.

Do not proceed if services are not independent of the main supply. Contact your supervisor.

Follow installation and maintenance procedures in this manual along with your company's safety guidelines.

Use valves designed for lock-out and tagging. All valves used on this equipment should be designed to be locked out and tagged. Never operate unit without guards in place.

Tighten sheave bushings to manufacturer's specification. All factory installed attachments are tightened to industry standard torque specifications.

Check torque prior to start up. Tack welding of bolt heads is an accepted industry practice.



CAUTION

Over tightening fasteners can result in failure of bolts and other attachments.

6.2 PRE-INSTALLATION

It will save time if all pre-installation work is completed before the unit is received. This section can be used as a check-list for preparation and installation.

Thermo Black Clawson prepares the following documents for every piece of equipment. They provide critical information for equipment installation.

- **Certified Drawings** - prepared by Thermo Black Clawson upon receipt of your purchase order and your returned approval drawings.
- **Owners' Manual** - sent with certified drawings.
- **Shipping List** - one is sent with the shipment and one is mailed to the mill the day shipment is made.

Foundation

Refer to the certified drawings for foundation information.

Equipment Placement

Certified drawings show space requirements for equipment operation and the anchor bolt plan. Adequate equipment clearances must be considered in your equipment layout. Consideration should be given to maintenance and installation requirements.

When equipment has to be lowered through an opening in the floor above, be sure that it is in correct foundation position before the unit is erected.

NOTE: CHECK THE CERTIFIED DRAWINGS TO DETERMINE IF ANY UNUSUAL CLEARANCE PROBLEMS WILL ARISE WHILE MOVING THE UNIT THROUGH THE MILL.

Lifting Equipment

We have attempted to ensure that the unit weights (not including crating weight) are on the certified drawings for each piece of equipment. If the weight is not on the drawing, contact Thermo Black Clawson. Verify that the hoist or crane at the mill has adequate load capacity to lift the unit safely. If it does not, it will be necessary to lease lifting equipment or contract for the services of a rigger.

Electrical Requirements

Be sure that power cables and controls are properly sized, and can be routed to the unit with a minimum of bends and turns. Verify that the available electricity is correct for the equipment it is to operate.

Piping

Check certified drawings for pipe sizes. Be sure that correct sizes of pipe, fittings, and adapters will be available when the piping is installed. It is essential that all piping be well supported. Also, expansion loops or joints should be properly installed in the connecting pipes to allow for linear expansion. Piping must not be connected to the unit until the grout has hardened and the foundation bolts have been tightened.

Leveling Instruments

The Starrett 12 inch Model 98 is considered as the industrial standard for leveling heavy machinery. Level to within 0.005 of an inch per foot. The level in an ordinary machinist's square is not accurate enough for the installation of this equipment.

Elevation

For proper flow rates through the Hydrapurge II, the top of the Hydrapurge II main body must not be higher than the lowest stock level in the Hydrapulper or farther than 25 feet away. Clearance under the heavy contaminant discharge flange is required for contaminant removal and thickening.

Containment of Heavy Rejects Flow

The heavy rejects flow must be controlled and contained to avoid flooding, splashing, and discharge into areas where people may be affected by the discharge. Installation personnel sometimes underestimate the possible quantity of the heavy rejects discharge flow. It is extremely important to know how much discharge flow can occur and have adequate methods to contain the flow.



WARNING

If you don't control and contain the heavy rejects flow, injuries such as cuts, abrasions, skin irritation, and scalding from splashing debris could occur to anyone standing in the area where an uncontained excessive heavy rejects flow occurs.

6.3 INSTALLATION

Thermo Black Clawson assumes no responsibility for the site preparation and/or construction required for the installation of this equipment. An adequate foundation, determined from the machine weight and floor loading conditions, must be provided.

The general guidelines suggested in this manual are for those individuals involved in installing the unit. It is the responsibility of the customer's erection crew or agents to maintain *As Built* specifications during the installation of the unit. If you have any problems or questions concerning the installation of this equipment, please contact the Thermo Black Clawson Field Service Department.

Customer Supply

The customer is to furnish all foundations, anchor bolts, steel shims, piping, etc. Refer to quotations and certified drawings for a complete listing of parts and hardware furnished by Thermo Black Clawson. Additionally, all grout design and placement of grout is the responsibility of the customer.

Contaminant Discharge

The Hydrapurge II contaminant discharge valve is usually supplied by the customer. An interlocking device should also be installed to prevent an accidental discharge from the Hydrapulper to the Hydrapurge II when the Hydrapurge II contaminant discharge valve is open.

We recommend that you select a fail-close automatic valve for the Hydrapurge II contaminant discharge valve and that you guard the valve to prevent anyone from reaching into the Hydrapurge body for any reason.

The heavy contaminant reject box is also supplied by the customer.

Foundation Surfaces

Clean all loose concrete chips and dust from foundation.

Anchor Bolt Pockets

Remove all debris and dust from anchor bolt pockets before installing sleeves.

Shim Packs

Steel shims will be required to level the unit before it is grouted in place. Mill supply must include 3 inch x 3 inch shims.

Anchor Bolts

Bolts must project at least ¼ inch through the nut when the unit is bolted down. Allow for grout and thickness of soleplate/footpads and nut when determining bolt length. See "Recommended Anchor Bolt Method" on page 34. The certified drawings call out the anchor bolt sizes, typical spacing, and layout. We recommend that anchor bolts be encased in sleeves to make allowance for minor deviations in mounting hole location.

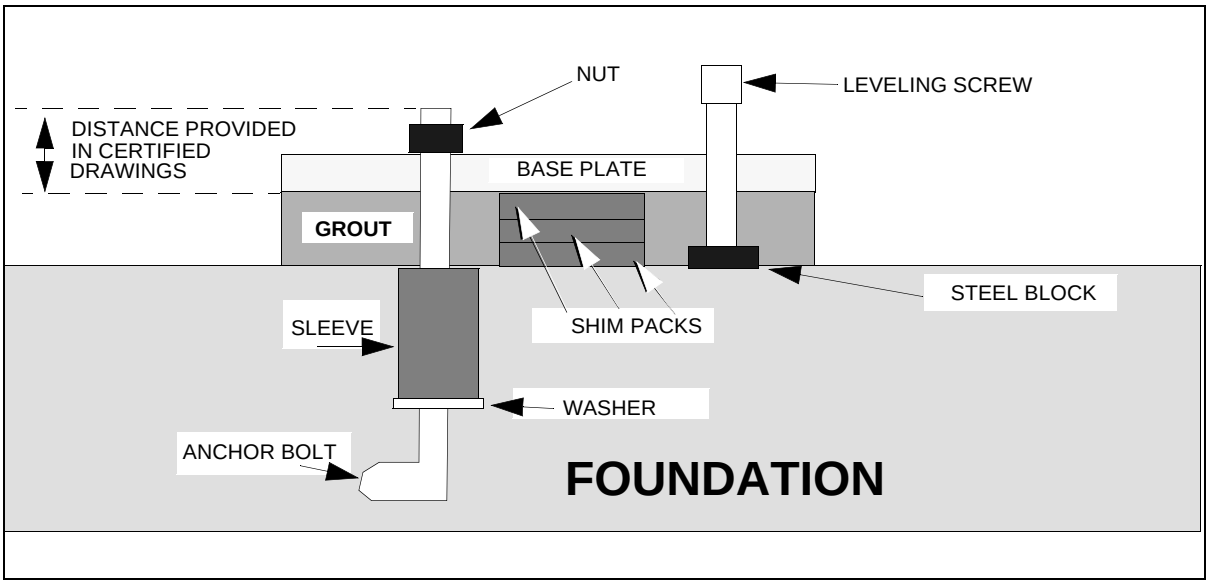

Recommended Anchor Bolt Method

Leveling the Unit

Level the base in both directions by using a precision level and the leveling screws in the foot pads. The top surface of the base is machined and is a reference point to obtain level. Level to within 0.005 of an inch per foot and hard shim both sides of each anchor bolt.

The leveling screws are installed only for leveling and should not carry weight when the anchor bolts are tight. It is good practice to remove the leveling screws at the completion of installation.

Avoid twisting or bowing the base because this will misalign the shaft as well as change the rotor gap. As the anchor bolts are tightened, use the precision level to assure there is no change in level due to a soft foot.

Grout

All grout design and placement of grout is the responsibility of the customer. Deviations from standard grouting practice could result in structural failure. Piping must not be connected to the unit until the grout has thoroughly hardened and the foundation bolts have been tightened. All couplings should be final aligned after the piping is completed.

6.4 EQUIPMENT SET-UP

We recommend that you check the following before proceeding with the connection of the main body:

- Check and tighten all fasteners and bolts to their proper torque specifications.
- Verify that screw jacks, slides and threaded rod are all operating smoothly with no binding or tightness.
- Adjust rotor, if required, to proper running clearance of 0.020 inch to 0.060 inch. See maintenance section for rotor adjustment.
- Consult bearing manufacturer's manual to determine proper procedure for running clearance on bearings. The outboard bearing is the held bearing. It is held on the shaft by a shrink fit and a retaining nut assembly. The inboard bearing is shrunk fit to the shaft.

Service Connections

Motor

The Hydrapurge II is equipped with a screw jack mechanism which is connected to the drive and motor mounting bracket. This device permits easy access for installation and maintenance work. The electrical connection for the motor requires a flexible drop cord long enough to permit the motor and rotor drive assembly to travel a minimum distance of five feet.

Note: It is the mill's responsibility to meet all electrical codes in the area, as well as any federal, state, and county regulations.

V-Belt Drive

After mounting the motor on the motor bracket, install the sheave on the motor shaft and align it with the sheave on the Hydrapurge II drive shaft. Before installing V-belts, check that the rotor will turn freely with no drag. Drag is an indication of improper rotor clearance or incorrect installation of the bearings. Refer to maintenance section if rotor does not turn freely. Install the V-belts and adjust the belts for proper tension.

Piping

The pipe and fittings should be carefully selected and of sufficient size to keep friction losses as low as possible. Avoid all unnecessary elbows, bends, and fittings as they increase the friction losses. Verify that elevation requirements of the installation have been met.

Valves

The type of valve to install in each line is given in the following service connection recommendations.



WARNING

Automatic valves should be piped fail-close so that all valves will close in the event of air pressure loss except for the light reject valve which should be fail-open.

Connection to the Furnish Pulper

The following installation arrangement shows a connection from the overflow feed box on the side of the trashwell to the feed flange of the Hydrapurge II. The length of pipe between the trashwell and the Hydrapurge II should be limited to a maximum of 25 feet. This distance should be adequate for making the discharge line connection from the trashwell to the Hydrapurge II. This arrangement is normally used in new pulper and detrashing system installations and represents our recommended installation of the Hydrapurge II. It provides a positive separation of heavy and light contaminants, dilutes and improves the flow through the detrashing systems, and facilitates trashwell operation.

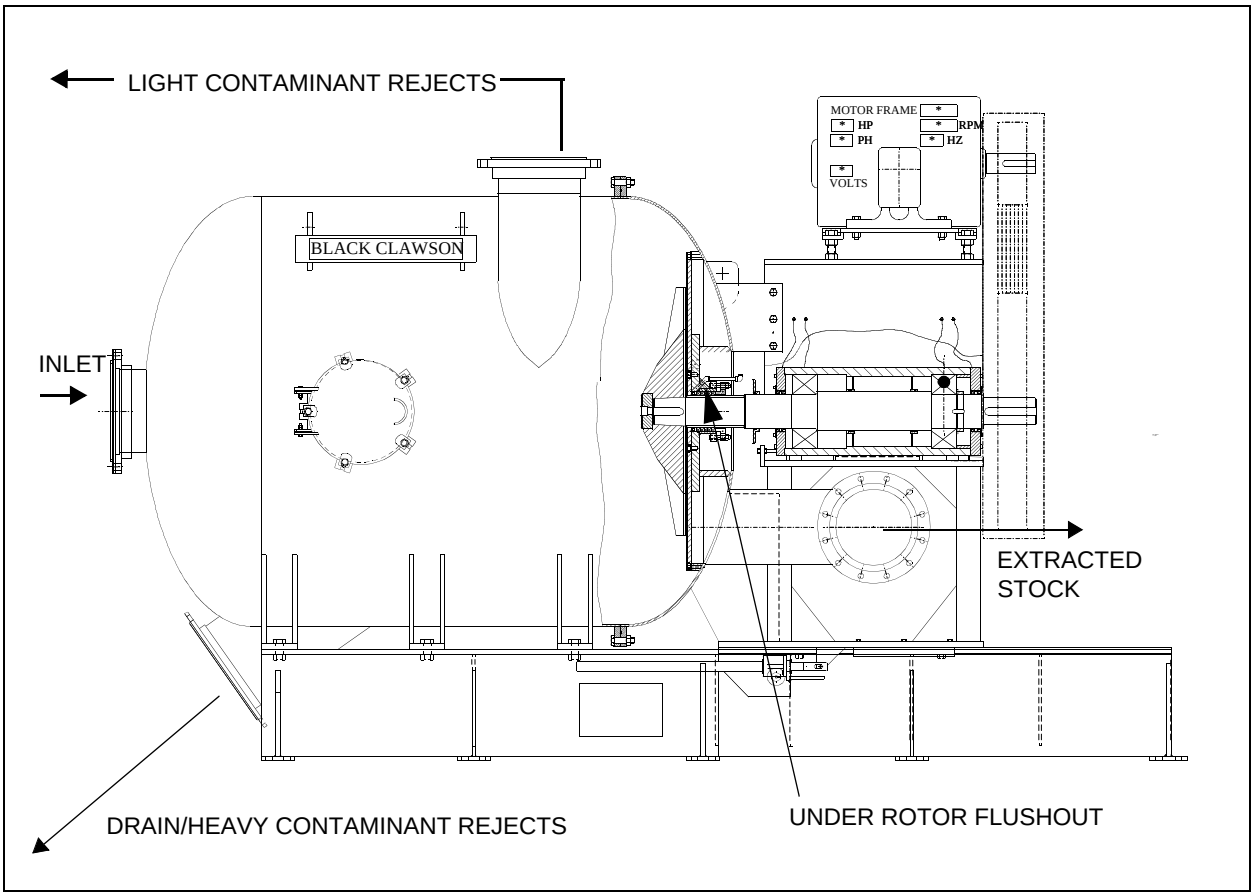

Illustration of Other Service Connections

Inlet Feed Connection

This needs to be 10 inches (24-950), 12 inches (33-3000) or 14 inches (42-5000) and fitted with an automatic knifegate valve. The control valve is placed in the line between the pulper and the Hydrapurge II, but on the pulper side of the section of pipe where the wash/dilution water enters.

Wash/Dilution Water Connection

This connection should be 4 inches (24-950), 6 inches (33-3000), or 8 inches (42-5000) pipe which enters the inlet pipe to the Hydrapurge II at a 45 degree angle, approximately midway between the pulper and the Hydrapurge II. The wash/dilution water line is required for contaminant washing and to provide the flow and pressure required to reject the light contaminants to the Selectpurge. The water supply can come from the mill's white water loop, but should be controlled by a handwheel valve at the loop connection to reduce the water pressure to the proper PSI at your mill. NOTE: The maximum design pressure of the Hydrapurge II is 75 PSI. The control valve to be fitted into this pipe to control the flow of wash water into the Hydrapurge II is to be an automatic knifegate valve.

Extracted Stock Connection

The extracted stock connection: (6 inches, 8 inches, or 12 inches for the 24-950, 33-3000 and 42-5000 respectively), on the Hydrapurge II extraction chamber is to be direct connected to the suction of the pulper dump pump. This line should be on the shortest path to the pump suction with as few elbows and elevation changes as possible. The line should enter the pump suction line at a 45 degree angle in the direction of stock flow. The control valve is to be an automatic knifegate valve. Also, we advise installing a manual drain valve in the extracted stock line, ahead of the automatic valve.

Recirculated Wash Water Line

This line angles off of the extracted stock line and is the same diameter as the extracted stock line. It is piped back to the pulper tub, and should enter the pulper just over the tub wall or into the side above the stock level. This line should be a minimum of 10 feet below the inlet line of the Selectpurge dewatering drum. This line may be plumbed into the extracted stock line just before the extracted stock accept valve. An automatic knifegate valve is required.

Light Contaminant Discharge Line Connection

This line is 10 inches diameter in the 24-950, 12 inches diameter in the 33-3000, and 14 inches in the 42-5000. It connects to the flange located at the top of the Hydrapurge II body. The pipe extends to the Selectpurge dewatering drum. The valve in this line should be an automatic knifegate valve.

The horizontal length of the contaminant discharge pipe should be kept to a minimum, with as few bends and elbows as possible. Vertical height recommendation is a minimum of 10 feet above the top of the pulper tub.

The discharge end of the pipe as it enters the Selectpurge should expand to 16 inches diameter and have a partial cover angled down at 15-20 degree, or a 45 degree angle elbow, to direct the flow into the first section of the drum. This is shown on general assembly drawings which accompany a Selectpurge.

Drain/Heavy Contaminant Discharge Connection

This flange diameter is the same size or larger as the inlet flange size, and is located below the inlet flange on the lower center of the front dished portion of the body. Flow from this connection will be the volume of the Hydrapurge II body. Dumping the contents of the Hydrapurge II through this connection is only required if heavy contaminants are trapped in the Hydrapurge II.

It may not be necessary to drain the Hydrapurge II body through this discharge on a regular basis, but only on occasion. A large flow will result from opening this connection, and this flow will need to be contained in a receptacle of sufficient size and sturdiness. An automatic or manual knifegate valve is required. This valve should be interlocked with the inlet valve to prevent an accidental discharge from the Hydrapulper tub to the Hydrapurge II when the drain/heavy contaminant discharge valve is open. This valve must be guarded to prevent personnel from reaching into the body of the unit. Because installations are different from mill to mill, guarding may be required and is the responsibility of the mill.

Containment of Heavy Rejects Flow

The heavy rejects flow must be controlled and contained to avoid flooding, splashing, and discharge into areas where people may be affected by the discharge. Installation personnel sometimes underestimate the possible quantity of the heavy rejects discharge flow. It is extremely important to know how much discharge flow can occur and have adequate methods to contain the flow.



WARNING

If you don't control and contain the heavy rejects flow, injuries such as cuts, abrasions, skin irritation, and scalding from splashing debris could occur to anyone standing in the area where an uncontained excessive heavy rejects flow occurs.



WARNING

To avoid the possibility of personal injury, don't reach or look into the unit.



WARNING

Mill supplied guards must conform to applicable standards including, but not limited to, OSHA 1910.212, OSHA 1910.217, ASME B15.1, and EN 294.

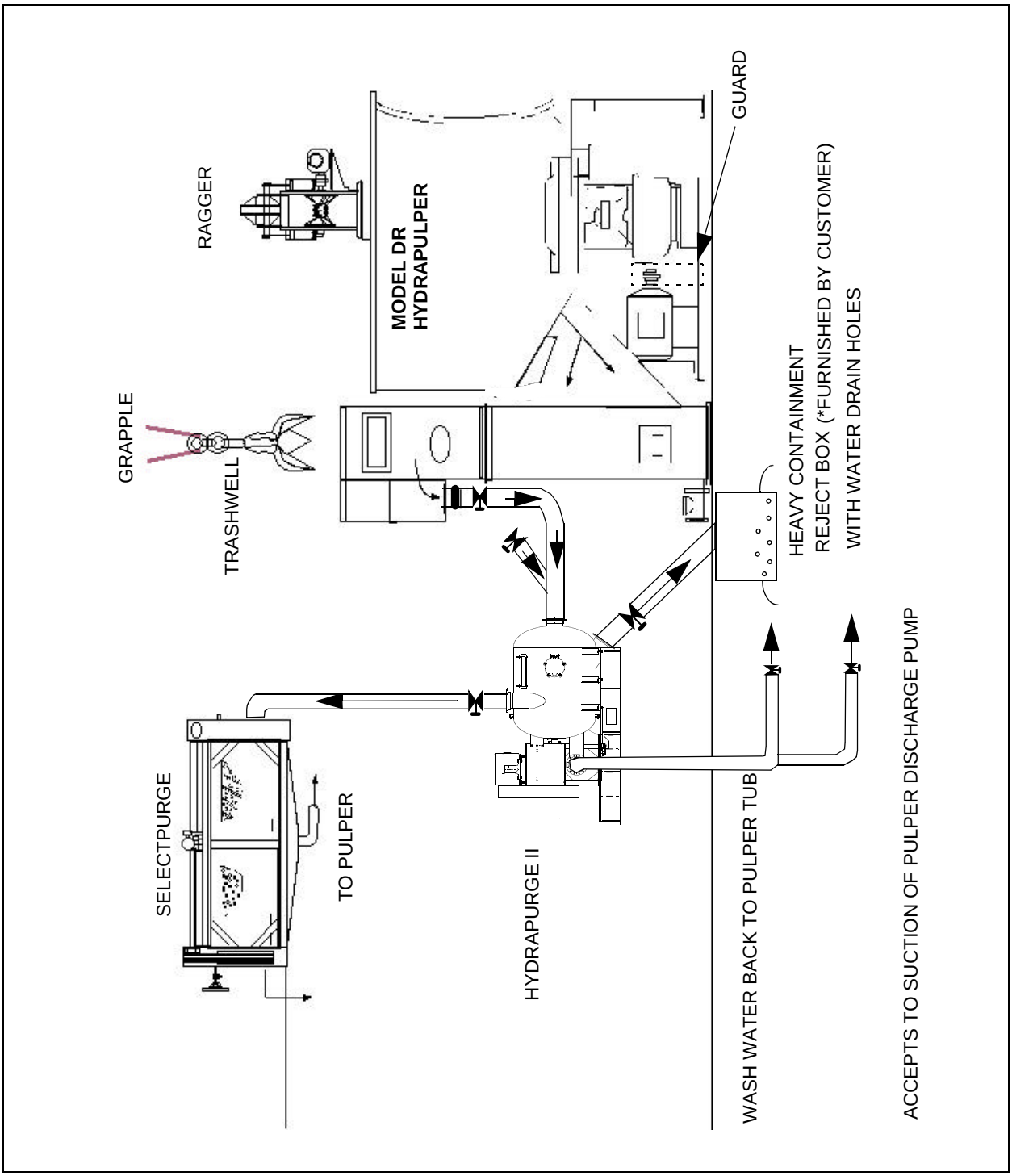

Preferred Hydrapurge II Detrashing System

In existing or new pulping systems with no trashwell or systems that have another type of junk removal system, there are alternative options for connection which are shown and described in the following pages.

Alternative A

A double compartment weir box module could be attached to the side of the pulper tub to feed the Hydrapurge II.

The box attachment is called a junk chute module and consists of a two compartment rectangular box with an adjustable weir level. The module connects to the pulper tub at the junk opening in the bottom of the tub. At the base of the module is a double valve (16 inch or 18 inch) junk trap which collects heavy contaminants.

A flow exits the pulper tub through the junk opening and flows up inside the compartment of the module. Any large heavies drop into the double valve chamber, and the flow continues up the inside compartment over the weir level and into the Hydrapurge II. During normal operation, the top valve of the double valve junk trap is open and the bottom valve is closed. When the chamber is full of heavy debris, the top valve is closed and the bottom valve is opened, allowing the heavy contaminants to fall out into a collection receptacle.

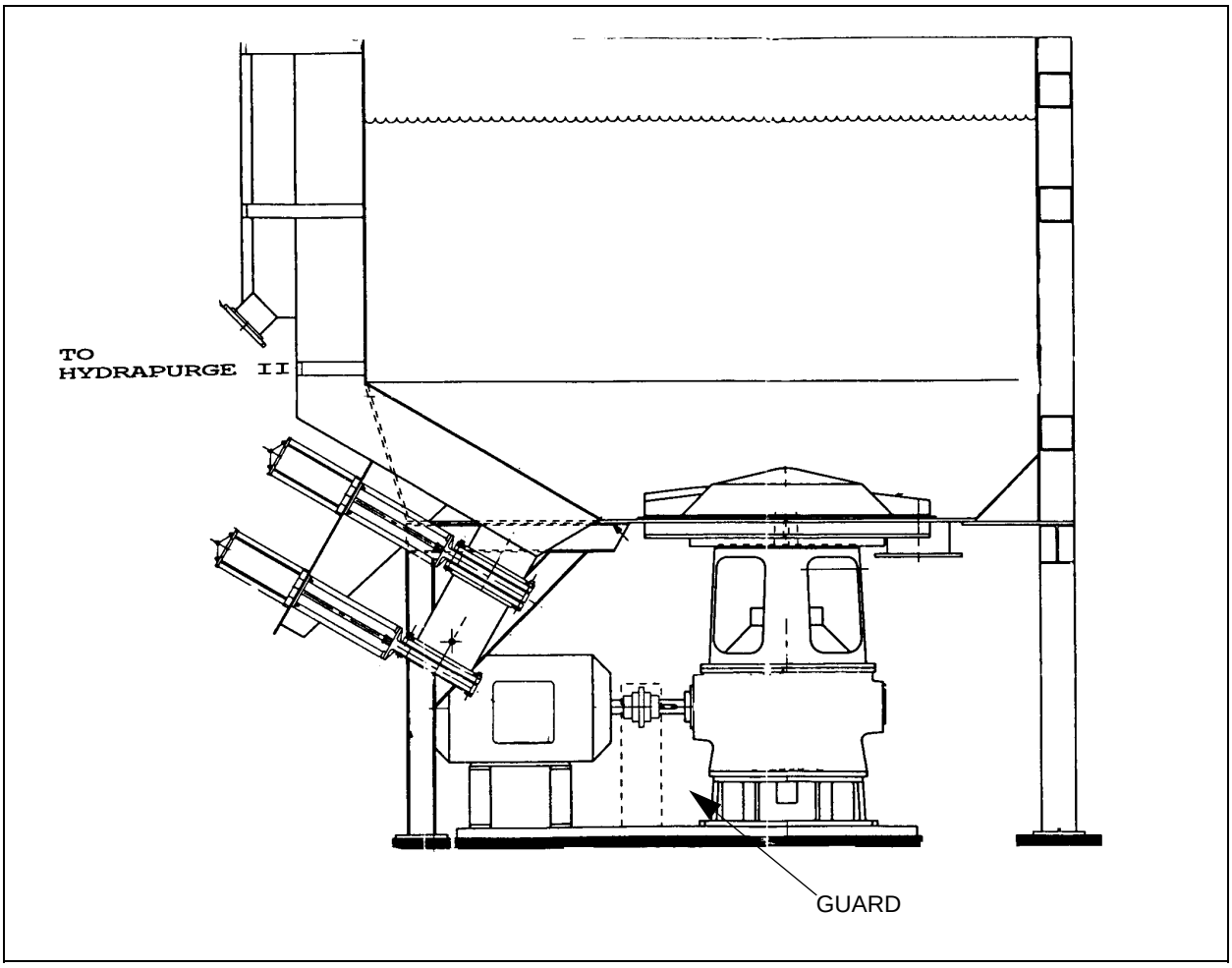

Illustration of Alternative A

Alternative B

The pipe feeding the Hydrapurge II can be connected directly into the wall of the pulper tub, in the straight wall section above the conical tub bottom, but 1½ feet to 2 feet below the lowest point of the operating level. A small deflector shield should be placed around the upstream side of the opening as it enters the pulper to lessen the possibility of large heavy contaminants entering the inlet to the Hydrapurge II.

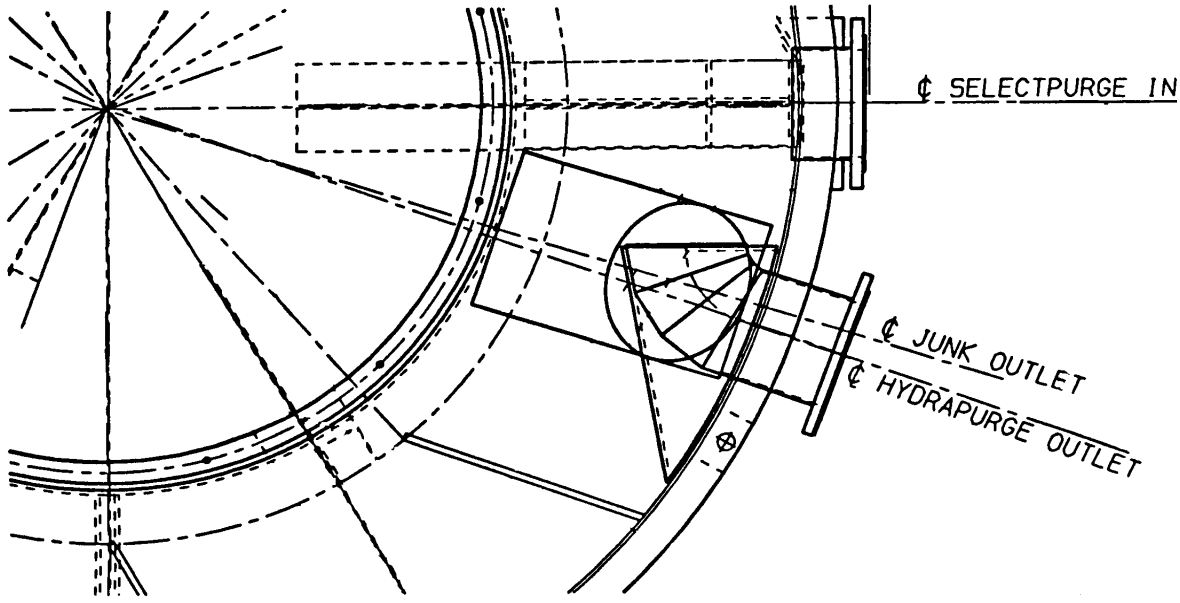

PARTIAL VIEW OF HYDRAPULPER SHOWING HYDRAPURGE OUTLET

Illustration of Alternative B

Alternative C

The inlet pipe to the Hydrapurge II can be connected to the top leg of the junk chute between the pulper tub and the bucket and chain junk remover or the trashwell.

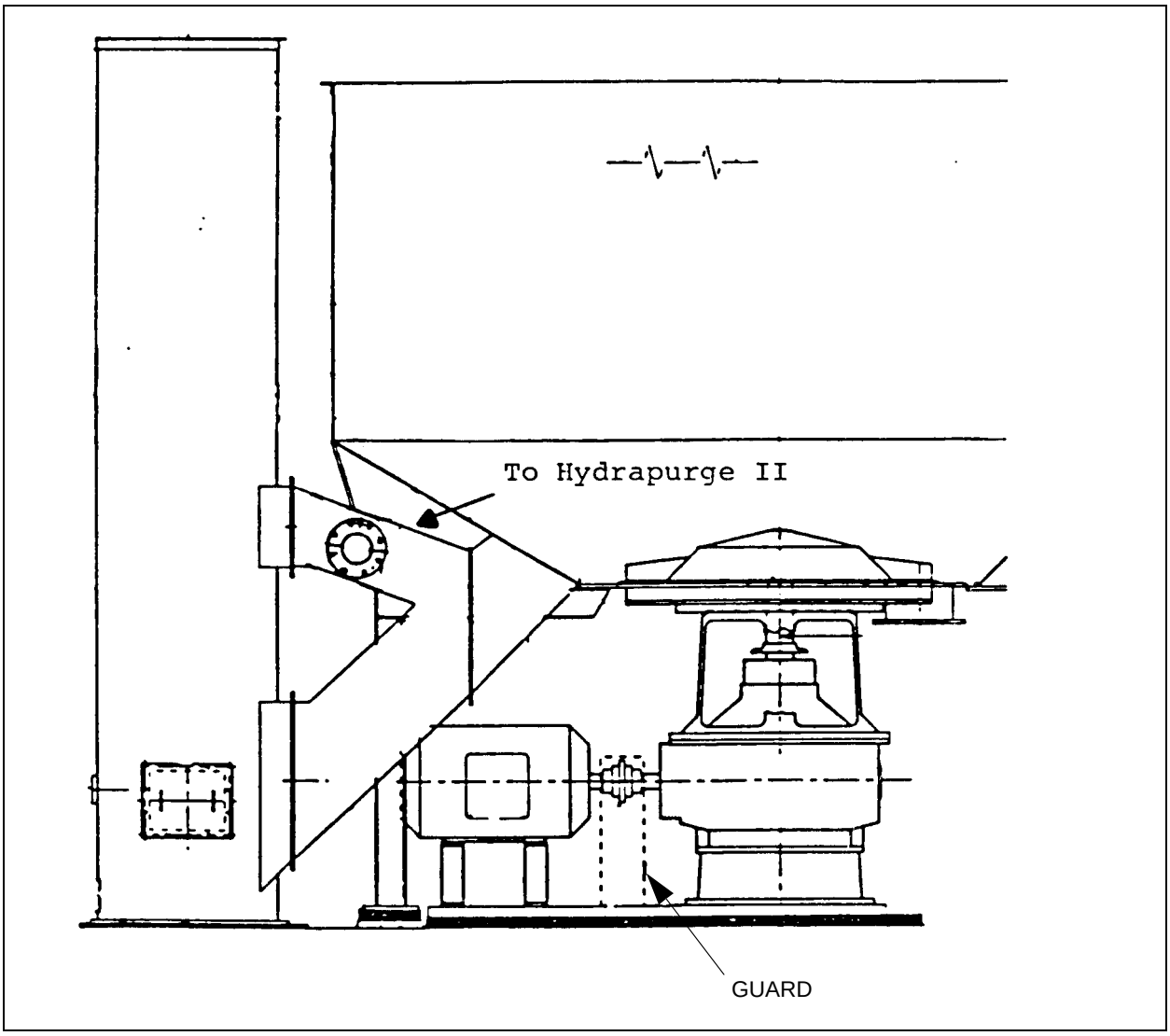

Illustration of Alternative C

Alternative D

An alternate method for connection to an existing bucket and chain junk remover is to connect the feed line for the Hydrapurge II on the outboard flat wall of the junk remover, directly across from the top leg of the junk chute.

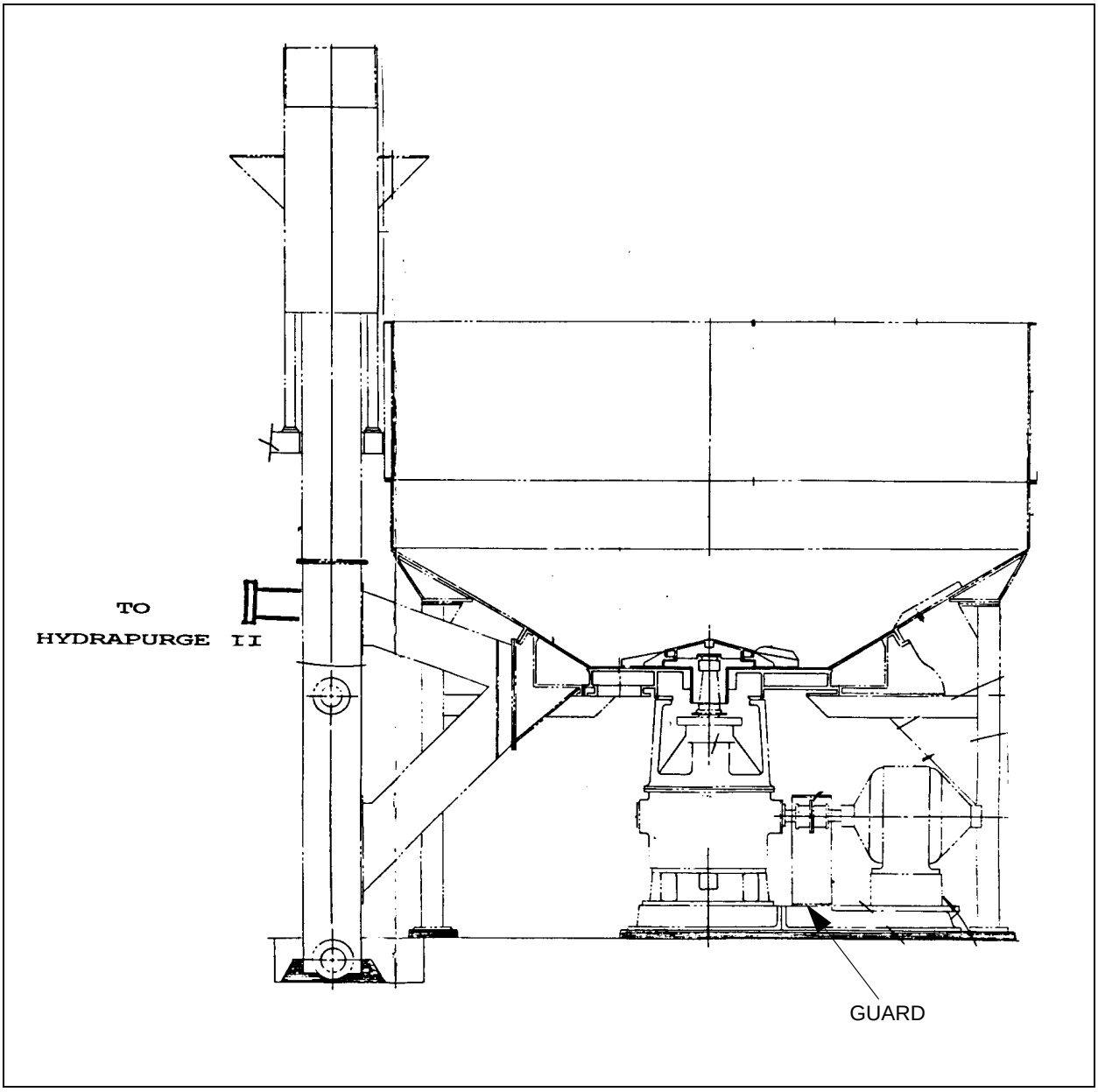

Illustration of Alternative D

For additional design information, contact your local Thermo Black Clawson Sales Manager or Thermo Black Clawson's System Engineering Group in Middletown, Ohio.

Overpressurization

To help keep your equipment from overpressurizing, install a pressure transmitter and switch as show in the illustrations that follow.

Install the pressure transmitter on the unit or between the feed valve and the unit.

Set the pressure switch to trip at 3 to 5 PSI below the maximum pressure of the unit. Connect the pressure switch to the control system to initiate the overpressurization shut down sequence upon tripping.

Before putting the unit into service, simulate an overpressurization condition to verify proper overpressurization shut down.

We recommend the following sequence for overpressurization shut down.

- Stop main motor.
- Stop feed pump (if used).
- Close dilution valve.
- Open feed valve.
- Open light reject valve.

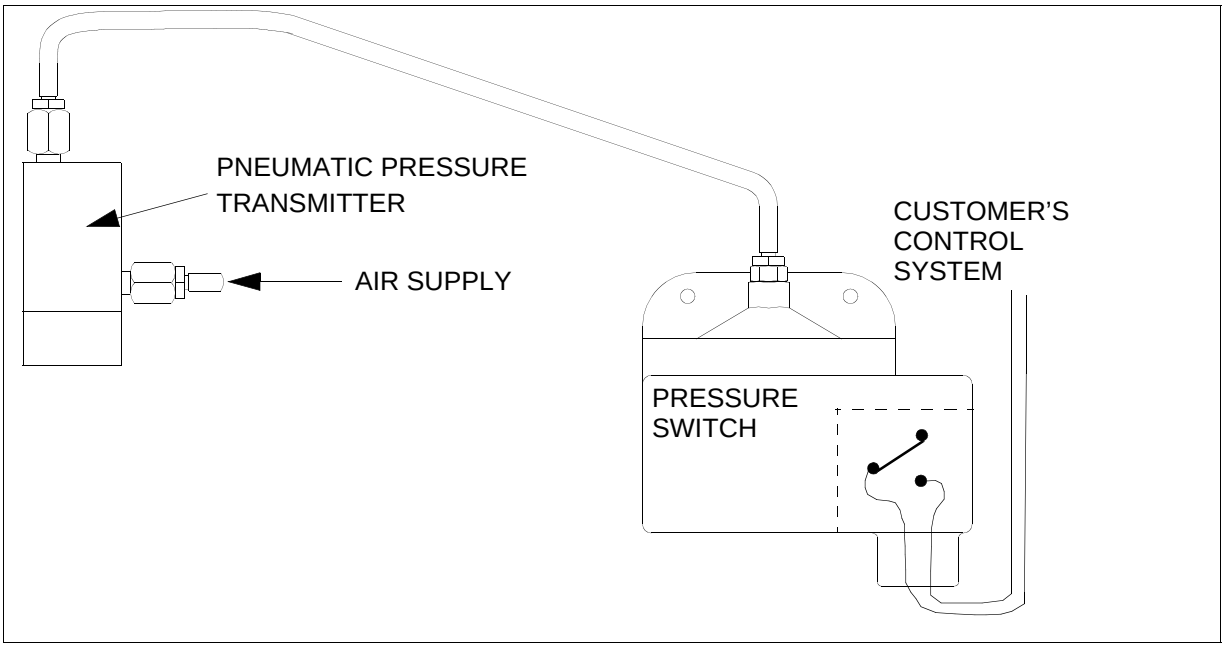

Pneumatic Pressure Transmitter and Switch

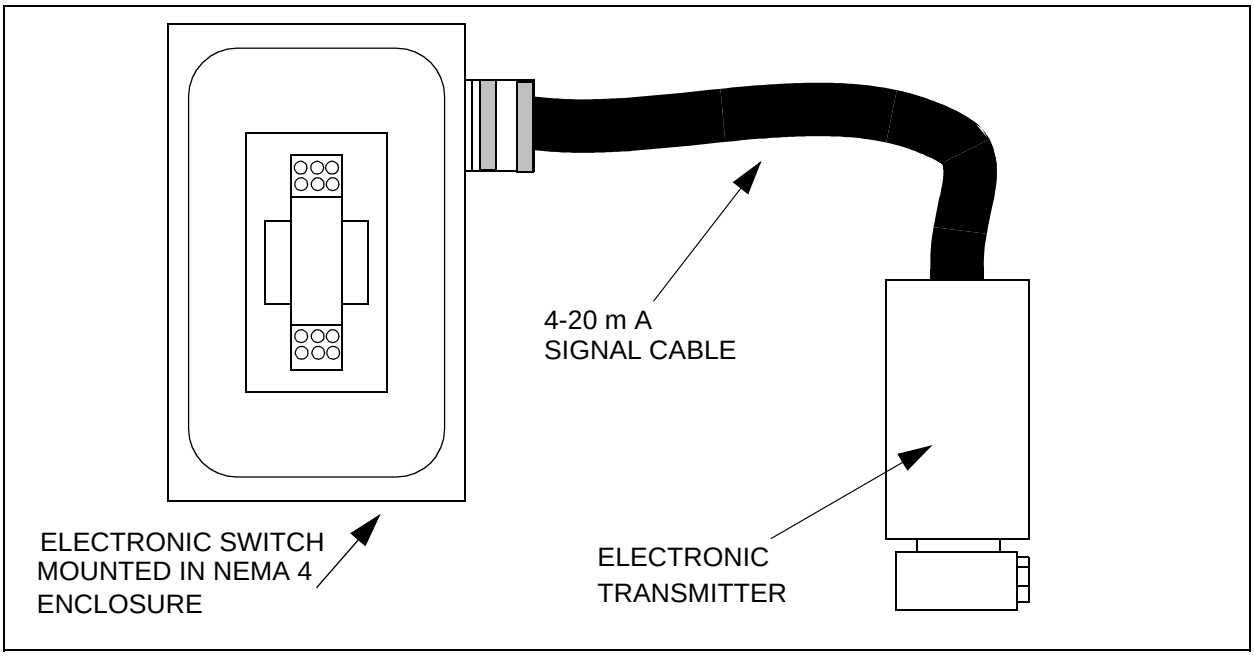

Electronic Pressure Transmitter and Switch

WARNING

Failure to install a pressure transmitter and switch or set the switch to trip as described in this section could result in personal injury or machine damage.

Containment of Rejects Flow

The rejects flow must be controlled and contained to avoid flooding, splashing, and discharge into areas where people may be affected by the discharge. Installation personnel sometimes underestimate the possible quantity of the rejects discharge flow. It is extremely important to know how much discharge flow can occur and have methods to contain the flow.

WARNING

If you don't control and contain the rejects flow, injuries such as cuts, abrasions, skin irritation, and scalding from splashing debris could occur to anyone standing in the area where an uncontained excessive rejects flow occurs.

6.5 SELECTPURGE DEWATERING DRUM

The Selectpurge is specially suited to the Hydrapurge II because it can receive a large flow in a short period of time without flooding and can handle large contaminants. The contaminant discharge flow from the Hydrapurge II to the Selectpurge drum can be as high as 2,000 GPM or more. Contaminants can be as large as gallon milk jugs and pieces of wood up to 2 inch x 4 inch x 16 inch.

Thermo Black Clawson offers Selectpurge units in sizes to optimize the operation of each Hydrapurge II model. Selectpurge Model 3000 is usually used with the Hydrapurge II Model 24-950, the Model 4500 Selectpurge with the 33-3000 Hydrapurge II, and the Model 5000 Selectpurge with the 42-5000 Hydrapurge II. The installation of the Selectpurge is covered more fully in the manual that accompanies a Selectpurge upon delivery. However, it is worth noting a few specifications for the Selectpurge during the installation of the Hydrapurge II.

- The Selectpurge should be installed above the operating floor of the furnish pulper, directly above the Hydrapurge II as much as possible. Horizontal distances of more than 40 feet are not recommended.
- The elevation of the Selectpurge should be high enough to allow the water and fiber accepts to gravity drain back to the pulper tub. The centerline of the inlet to the Selectpurge should be a minimum of 10 feet and a maximum of 20 feet above the pulper tub lip.
- The accept trough beneath the Selectpurge and a top cover are standard supply with the Selectpurge.
- Maximum feed consistency to the Selectpurge is 1%.
- The last 5 to 6 feet of the piping to the Selectpurge should be a spool piece to allow removal for maintenance on the Selectpurge and should expand in diameter.
- The Selectpurge has some positioning flexibility. For information on this, Call Thermo Black Clawson's Engineering Department in Middletown, Ohio.

Dewatering Conveyors

A specially designed rejects dewatering conveyor can be supplied with the Hydrapurge II. Positioned beneath the bottom rejects drain, the conveyor will accept the flow of contents from the body of the Hydrapurge II. Water drains through perforations in the basket of the dewatering conveyor. As the rejects thicken, they adhere to a rubber belt conveyor angling out of the drainage basket. The rejects can be directed conveniently to a dumpster for disposal. Two sizes are available: the H3-30 inch for the Hydrapurge II models 24-950 and 33-3000; and the H4-60 inch for the Hydrapurge II 42-5000.

Guarding

The Hydrapurge II heavy contaminant discharge valve must be guarded to prevent anyone from reaching into the Hydrapurge body for any reason.



WARNING

Mill supplied guards must conform to applicable standards including, but not limited to, OSHA 1910.212, OSHA 1910.217, ASME B15.1, and EN 294.

Because installations are different from mill to mill, guarding may be required and is the responsibility of the mill.

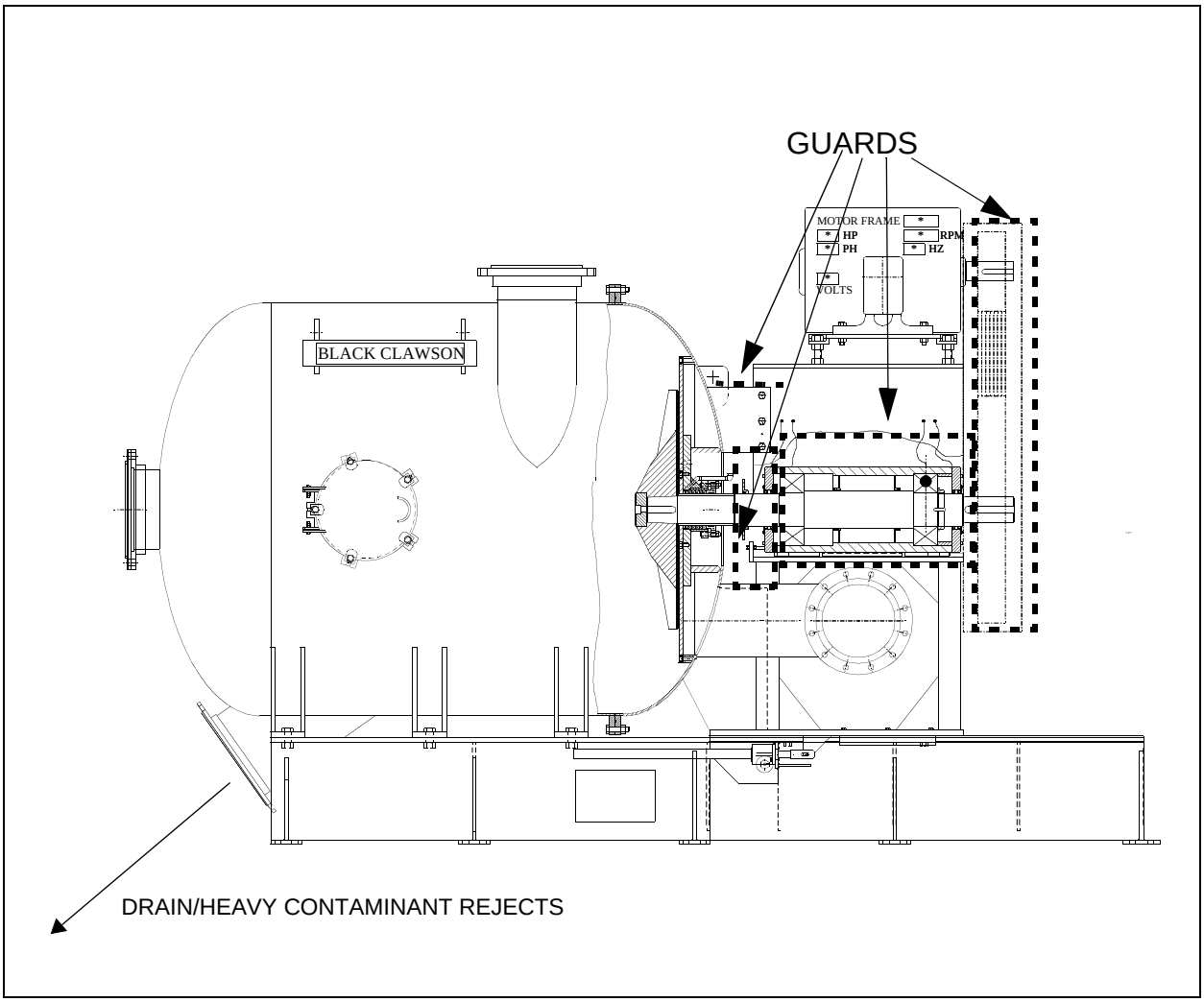

Guard Locations

7.0 OPERATION

7.1 PRE-CHECKOUT

Many programmable solid state systems have the capability of simulating operation in a mode known as *Test Mode* or *Dry Run Mode*. These modes allow a user to check a program and correct obvious programming errors with outputs disabled. Unexpected machine motion and possible damage to equipment is avoided. These modes can also be used to verify proper system operation after a repair.

Many programmable systems provide for *Force On* and *Force Off* of inputs and outputs. These functions can reduce troubleshooting and maintenance time by enabling personnel to bypass certain operations without physically operating switches on a machine.

WARNING

Use care when using *Force* functions to avoid exposing personnel to hazardous machine motions or process operations which might cause severe personal injury or death.

Mechanical start-up involves the following steps, which must be carried out in sequence:

- Inspect the installation before the power is connected.
- Disconnect motors and other devices that cause machine motion.
- Test inputs.
- Test outputs.
- Enter and verify your program.
- Test the system with motors and other motion-causing devices reconnected.
- Go through a *dry run* of the application.

The purpose of these procedures is to isolate such problems as wiring mistakes, equipment malfunction, and programming errors in a systematic, controlled manner. Go through these procedures very carefully. Following a given set of steps will help avoid possible personal injury and equipment damage.

WARNING

During all phases of motion check-out, station a person ready to operate the power switch if necessary.

Inspect and make sure of the following before starting the unit:

- All guards and covers are in good condition and fastened in place.

- No parts are loose, worn, damaged, or missing.
- All personnel are clear of the equipment.

A FIRST-TIME CHECKOUT SHOULD INCLUDE THE FOLLOWING:

- Measure the clearance gap between the bottom of the rotor and top of the deflector strips on the extraction plate. This is preset at the factory to a clearance of 0.020 inch - 0.060 inch. If the clearance is not between 0.020 inch and 0.060 inch at the closest point, reset the gap (see maintenance section). Measurements should be taken at the rotor vane tip in four equally spaced locations around the extraction plate. The point of the tightest clearance should be used to determine and measure necessary adjustments.
- Inspect the packing box area to ensure that the packing has been installed. The unit is shipped without packing. Also, check that the packing box water connection has been made. Packing box water requirements are approximately 1 GPM. Packing box includes the lantern ring, packing, and a split packing gland.

Note: These connections must have unions and valves that can be separated to retract the extraction chamber.

- Check bearing lubrication (see “Lubrication Points” on page 76 for lubrication points). Spherical roller bearings are used in the drive assembly. You should always grease these bearings before start-up. The lubricant must be non-corrosive to roller bearings and must be neutral in reaction. It should contain no grit, abrasives, or fillers; it should not precipitate sediment; and should have moisture resistant characteristics. The lubricant must have good resistance to oxidation. Refer to the manufacturer’s recommendation bulletin.
- Check V-belts for proper tension.
- Torque all fasteners to the specifications listed on your certified drawings. For any unspecified torque values on fasteners used in the Hydrapurge II, you should always apply the standard fastener industry torque values as required by grade, material, size, and thread type of the fastener.
- Check the motor to verify correct rotation of rotor. This can be verified by observing the rotation of the shaft and sheave, which will turn clockwise when viewed from the motor end. The direction of rotation is marked by an arrow on the back of the Hydrapurge II body.
- Energize the control panel and allow it to time through a complete cycle to check the timing sequence and the operation of the valves. The timing of each phase has been preset at the factory. After start-up and observation of the operating conditions, the time for each phase can be easily adjusted to suit the conditions.
- Operate the system on water for several cycles to determine proper flow through, motor loads, and to check for leaks.

7.2 METHOD OF OPERATION

The Hydrapurge II operates on a cycle basis extracting stock directly from the pulper tub for a period of time. Fiber is accepted through a perforated extraction plate located behind the back wall mounted rotor, sending it directly downstream by connection of the accept line to the suction of the pulper discharge pump. Plastics and other lightweight debris build up inside the body of the Hydrapurge II. Periodically the light contaminants and small heavy contaminants are washed and purged to the Selectpurge Dewatering drum, or some other dewatering device, for thickening and removal from the system. Heavier weight contaminants are discharged from the valve located near the bottom of the feed end of the body.

Phase I - Extraction

For approximately 8 minutes (actual time period is adjustable and depends on the production rate, type of furnish, contaminant level, and other variables), a flow is extracted from the pulper tub by opening the inlet valve and the extraction valve on the Hydrapurge II. The flow is processed inside the Hydrapurge II by the action of a small, low speed Vokes rotor mounted in the rear wall. A perforated extraction plate is located behind the rotor. Stock is extracted through this extraction plate and is sent directly downstream for further processing. As the flow from the pulper tub is processed through the Hydrapurge II during this phase, the contaminants build up inside the body of the Hydrapurge II. This build-up is indicated by the motor load reading on the ammeter in the control panel (the motor load typically increases as the amount of contaminants build up inside the Hydrapurge II body).

Phase IA - Option

An optional defibering step can be included when excessive amounts of wet strength fiber is being added to the pulper furnish mix. In this step, all valves, except the inlet valve, are closed, allowing additional defibering time in the Hydrapurge II body.

Phase II - Washing

When the extraction phase has timed out or when the motor load has reached a preset amount on the control panel ammeter, the second phase begins. At this point, the wash/dilution water valve opens, introducing wash water at 15-20 PSI into the Hydrapurge II to wash the fiber from the contaminants. We recommend that the inlet valve be left open for 15-30 seconds after the wash/dilution valve opens to relieve pressure and to back flush the inlet line. The light contaminant reject discharge valve opens as the inlet valve closes to relieve pressure. The washing phase typically lasts for 2-3 minutes. The extracted wash water can be sent downstream or typically, during the last half of the wash cycle, it can be recirculated to the pulper tub.

Phase III - Light Contaminant Reject

As the washing phase finishes, the stock extraction valve and/or recirculation valve closes. The pressure from the wash water and the pumping action of the rotor purges the water and contaminants from the body of the Hydrapurge II. This material is sent to a dewatering device, such as the Thermo Black Clawson Selectpurge (see “Hydrapurge II Detrashing System” on page 21 and “Selectpurge” on page 25). This unit is a perforated drum, supported and driven by two sets of 4 belts and a 5 or 10 horsepower motor. An internal spiral conveys the contaminants down the length of the drum and discharges them off the end at 12-15% consistency while the water drains

through the perforations, flowing by gravity back to the pulper. The Selectpurge is specially suited for this application as it is able to accept a large volume of flow in a short period of time. Recommended elevation of the Selectpurge is a minimum of 10 feet to a maximum of 20 feet above the pulper tub. The contaminant reject phase typically lasts for 30 seconds, after which both the reject discharge valve and the wash water valve close. The inlet valve and the stock extraction valve reopen and another cycle begins.

Phase IV - Heavy Contaminant Reject

This phase is not usually timed into the control sequence of the valves because it only needs to be run occasionally in most installations. The drain/heavy contaminant discharge valve can be opened at the end of the light contaminant discharge cycle to remove accumulated heavy debris. The valve positions for this phase are indicated in the following illustration. If the drain/heavy contaminant discharge becomes plugged, see “Plugging” on page 68 for unplugging instructions.

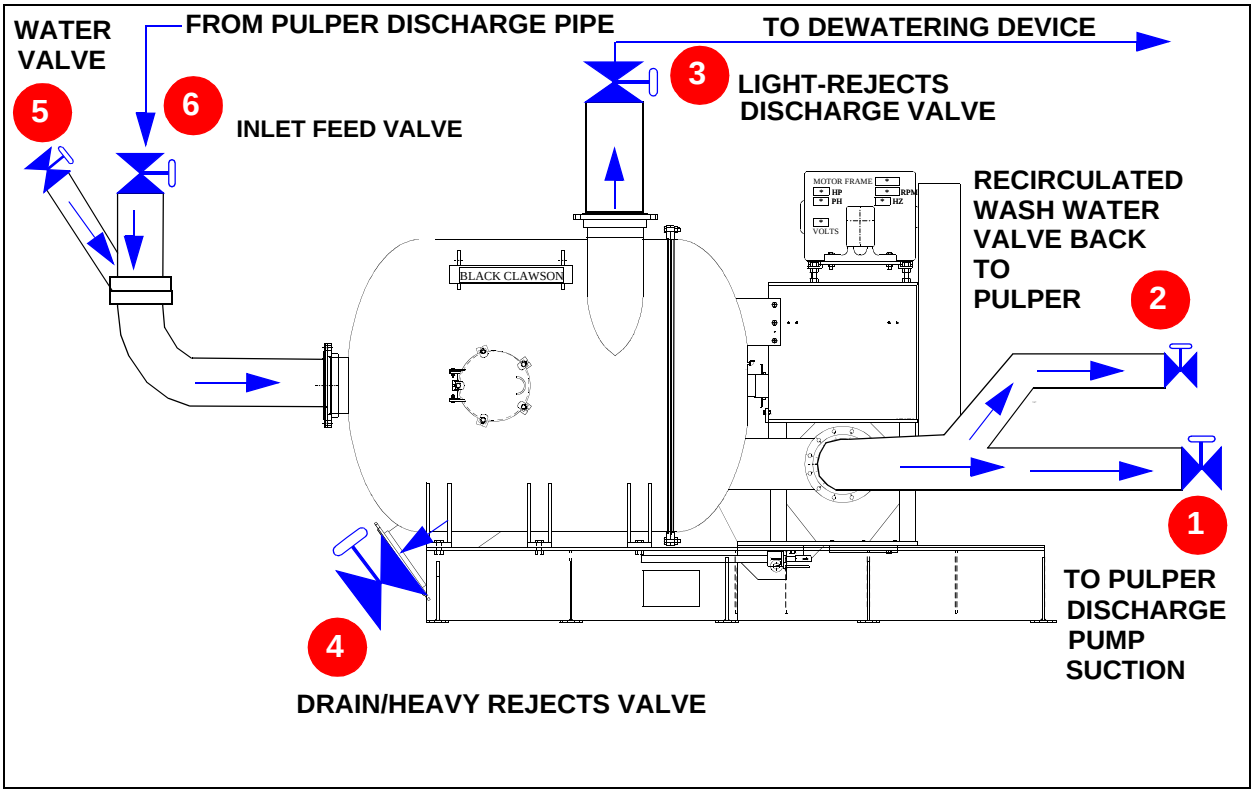

Hydrapurge II Operating Sequence

Typical Operating Cycle

PHASE	EXTRACTION VALVES		REJECT VALVES		WATER VALVE	INLET VALVE	DURATION
	1	2	3	4	5	6	
EXTRACTION	*O*	*C*	*C*	*C*	*C*	*O*	8 MIN.
DEFIBERING	*C*	*C*	*C*	*C*	*C*	*O*	2 MIN.
WASHING I	*O*	*C*	*C*	*C*	*O*	*O*	15 SEC
WASHING II	*O*	*C*	*O*	*C*	*O*	*C*	60 SEC
WASHING III	*C*	*O*	*O*	*C*	*O*	*C*	60 SEC
REJECTING	*C*	*C*	*O*	*C*	*O*	*C*	75 SEC
HEAVIES REJECT (OPTION)	*C*	*C*	*C*	*O*	*C*	*C*	(5 SEC)
O = open; *C* = closed. Total sequence time is 13.5 minutes (4.5 cycles per hour). For each hour of operation, the Hydrapurge II extracts downstream stock for approximately 36 minutes.							

7.3 OPERATING VARIABLES

Efficient operation of the Hydrapurge II enables it to detrash a correctly sized pulper sufficiently to allow the pulper to operate at peak production. The following factors affect the operation of the Hydrapurge II detrashing system and its ability to remove contaminants from the pulper.

Consistency

The consistency in the Hydrapurge II during the extraction phase of the cycle should be maintained in the 2.5% to 3.5% range. If the consistency drops lower than this, the defibering efficiency decreases. If the consistency is higher, the contaminant separation decreases, limiting efficiency. In addition, high consistency decreases the flow through the Hydrapurge II, and would also increase the time required for the washing phase.

Temperature

Most waste paper furnish pulpers are operated in the 120 to 140 degrees Fahrenheit or higher range. Lower temperatures affect the efficiency of the detrashing system by decreasing the defibering efficiency and reducing contaminant separation and movement into the detrashing system. Also, if there is wet strength in the furnish which requires high temperatures to break down, less of it will break down in the pulper and it will get into the Hydrapurge II system. Since the wet strength is very difficult to break down, it will act as a contaminant being rejected by the Hydrapurge II.

Furnish

Some types of furnish, such as bottle carrier or other wet strength furnishes are very difficult to break down, requiring more pulping time in the pulper and in the Hydrapurge II. This will decrease the capacity of the Hydrapurge II. Other furnishes break down more easily, requiring little time in the Hydrapurge II. This allows a longer extraction phase and increased flow rate, which increases the capacity of the system.

Contaminants

If the incoming furnish to the pulper is highly contaminated with a high percentage of non-pulpable debris, these contaminants get into the Hydrapurge II and build up very rapidly. This will reduce the time in the extraction phase, which will decrease the fiber accept capacity of the Hydrapurge II, but not necessarily the contaminants removal efficiency since more will be rejected to the Selectpurge. The total cycle time will go down but there will be a greater number of cycles per hour.

Ragger

The Hydrapurge II is not designed to replace the ragger in a dirty waste paper pulping system. An efficiently operated ragger is still needed because the Hydrapurge II will not remove wires from the pulper tub. If not removed by the ragger, the wires from the furnish bales will ball up inside the pulper tub, which will decrease pulper throughput, waste power, and increase wear. Small pieces of wire which have broken off could be carried into the Hydrapurge II and would be removed through the drain/heavy contaminant dump valve, located at the bottom of the dished section of the Hydrapurge II body. The ragger will also catch large sheets of plastic, rags, and other large contaminants which could cause plugged lines if they got into the Hydrapurge II.

7.4 CONTROL GUIDELINES

Safety considerations are an important element of proper troubleshooting procedures. Actively thinking about safety of yourself and others, as well as the condition of your equipment is of primary importance. Several safety areas are discussed below.

Power Supply

Before working on a power supply, always remove the AC power source at the main disconnect switch. When using more than one power supply, be sure to disconnect all of them.

Main Power Disconnect

The main power disconnect switch should be located where operators and maintenance personnel have quick and easy access to it. Ideally, the disconnect switch is mounted on the outside of the enclosure so that it can be accessed without opening the enclosure. In addition to disconnecting electrical power, de-energize all other sources of power (pneumatic and hydraulic) before working on a panel controlled machine or process.



WARNING

When troubleshooting, never reach into the machine to actuate a device. Unexpected machine motion could occur and result in serious injury.

Operation Safety Precaution

When troubleshooting any control panel problem, have all personnel remain clear of the machine. The problem could be intermittent, and sudden unexpected motion could occur. Have someone ready to operate an emergency stop switch in case it becomes necessary to shut off power to the machine.

Program Alteration

There are several causes of alteration to the user program, including extreme environmental conditions, electromagnetic interference (EMI), improper grounding, improper wiring connections and unauthorized tampering. If you suspect the memory has been altered, check the program against an approved version such as on the EEPROM memory module.

Hardwired Circuitry



WARNING

Circuits that are installed on the machine for safety reasons, including over-travel limit switches, stop push buttons, and interlocks, should always be hardwired in series so that when any one device opens, the master control relay is de-energized, thereby removing power to the machine. Never alter these circuits to defeat their function. Serious injury or machine damage could occur.

Safety Recommendation for Maintenance Personnel

All maintenance work should be done by qualified personnel familiar with construction, operation, and hazards involved with the equipment.

Follow the appropriate work practices of the National Fire Protection Association (NFPA) for Electrical Standards for Industrial Machinery.

Make-Do testing devices such as incandescent lamps have low impedance. The low impedance of these devices can effectively change a voltage level from logic *1* condition to a logic *0* condition when attempting to make a measurement. Unexpected machine motion can result if an output to a controlled device is energized as a result. Neon lamps do not respond to voltages typically used in logic circuits (e.g. 32 VDC or less). Use of a neon lamp tester could lead to false conclusions about the voltage present in a circuit.

High input impedance meters are required to obtain accurate voltage measurements in high impedance circuits. Unless otherwise specified by the manufacturer, a meter with an input impedance of ten (10) megohms or greater is recommended for making voltage measurements. The meter must also have sufficient sensitivity to measure logic level voltages; some meters do not respond to low voltages.

Control Panels

The control panels are designed using all NEMA (National Electrical Manufacturer's) and/or UL (Underwriter's Laboratory) approved components suited for the environment in which it is being placed. Every effort is made to adhere to the NEC (National Electrical Code), OSHA (Occupational Safety and Health Act), ANSI (American National Standards Institute), and mill standards as they apply to your application.

The power feed should include an equipment grounding conductor to bond the enclosure to building earth ground.



DANGER

Touching live electrical wires will cause death or serious injury.

- Power feed should have a disconnect or breaker capable of being locked in the open position.
- Wire field devices per certified installation drawings furnished with the control panel.
- Route field wiring to separate the AC from the DC and/or low level signals.

All the electronic instruments were factory programmed to a fail safe state (if a component failure occurs). The panels include a power push button that, when pushed, will power down the main processor, closing all valves.

Education and Knowledge Lead to Safety

Planning for an effective solid state circuit requires enough knowledge to make basic decisions that will render the system safe as well as effective. Everyone who works with a solid state control should be educated in its capabilities and limitations. This includes in-plant installers, operators, service personnel, and system designers.

7.5 OPERATION

Control Panel

A standard, basic control panel can be used to operate the Hydrapurge II detrashing system. The control panel supplied by Thermo Black Clawson includes the following:

- NEMA 4X stainless steel enclosure
- *Start/Stop* push-buttons for Hydrapurge II motor with adjustable setpoint ammeter for load control.
- *Power On/Emergency Stop* maintained push-button switch.
- *Auto/Manua*l selector switch.
- Auto Mode: timed sequence of control valves via programmable controller.
- Manual Mode: illuminated push-buttons for opening control valves.
- Illuminated push-buttons for indicating valve open.
- Monitor for monitoring or changing time of cycle.
- Spare EEPROM memory module.
- User's manual for the programmable controller.
- Another control alternative is to control the Hydrapurge II system operation using the mill's Distributed Control System. Thermo Black Clawson will provide all necessary logic information.

Normal Start-Up

Don't start the machine until the following conditions are met:

- All personnel are clear of the machine.
- All doors and/or hatches are closed.
- All guards and covers are in place.

When the preceding conditions are met, begin the start-up procedure as follows:

- Turn on packing box water to Hydrapurge II packing box (fresh water).
- Turn on the under-rotor flush water valve (white water).
- Energize control panel, manual mode.
- Start up Selectpurge dewatering drum and showers. (Optional sequencing includes operating the Selectpurge only during the wash and reject phases.)
- Start Hydrapurge II.
- Open wash/dilution water valve, inlet valve, stock extraction valve, recirculation valve, and light contaminant discharge valve manually to determine that all are in good working condition.
- Turn the control panel to automatic mode.

Normal Shut-Down

- Turn control panel to manual mode. (Setting the panel to manual mode closes all valves except for the light reject valve.)
- Open stock extraction valve, inlet valve, and dilution water valve for about 30 seconds.
- Close inlet valve to allow water to wash through for 3 to 4 minutes.
- Close extraction valve and reject to Selectpurge for 2 to 3 minutes.
- Close wash/dilution water valve.
- Close the under-rotor flush water valve.
- Shut down Hydrapurge II unit.
- Shut down the Selectpurge dewatering drum and showers.

If drain/heavy contaminant dump valve is plugged, the unit must be shut down and locked out, and all pressure must be relieved. Carefully follow procedure "Plugging" on page 68 for unplugging. NOTE: For extended shut-downs, the inlet line should be cleared to avoid plugging and the packing water may be turned off as an option.



WARNING

Do not perform service or maintenance work on this equipment until all sources of energy have been locked out and any stored energy has been relieved--unit is at zero mechanical state (ZMS).

Emergency Shut-Down



WARNING

Automatic valves should be piped fail-close so that all valves will close in the event of air pressure loss except for the light reject valve which should be fail-open.

- Shut down the Hydrapurge main drive as quickly as possible.
- Turn panel to *manual*. (Setting the panel to manual mode closes all valves except for the light reject valve.)
- Shut down Selectpurge main drive as quickly as possible.
- Shut off packing water, flush water, and any other sources of energy. Bring the Hydrapurge to a zero mechanical state*.

***zero mechanical state** - *see definition in glossary of this manual.*

7.6 ADJUSTMENTS

Monitor motor load on the Hydrapurge II to determine if adjustments to the cycle should be made.

Phase I - Extraction

At the beginning of the extraction phase, the motor load should be 50% to 70% of full load. As this phase times out, the motor load typically will slowly increase as consistency and contaminant load build up. A built-in safety feature will automatically take the cycle out of the extraction phase and into the wash phase if the motor load gets too close to full load (preset on the control panel ammeter). If this occurs frequently, every other or every third cycle, the length of the extraction phase should be reduced. If, however, the motor load remains consistently well under full load at the end of the extraction phase, the length of this phase can be increased, processing more flow from the pulper and increasing contaminant removal.

Phase IA - Defibering

This phase, if used, should only be long enough to further defiber difficult furnishes such as wet strength. Excessive time may promote contaminant degradation.

Phase II - Washing

As the washing phase progresses, the motor load will gradually decrease. In addition, the consistency of the Hydrapurge II extracted stock will decrease. The wash cycle should be only long enough to drop the extracted stock consistency to 0.5% to 0.75%. Excessive washing will reduce the detrashing capacity of the system and overly dilute downstream stock or the pulper tub. Typically, two body volumes minimum are required for adequate washing.

Phase III - Rejecting Light Contaminants

This only needs to be long enough to ensure removal of most of the contaminants from the body of the Hydrapurge II and to drop the motor load down to the beginning amp reading. The amount of rejects off the end of the Selectpurge drum can be monitored to determine if Phase III needs to be adjusted. Typically two body volumes minimum are required for adequate rejecting.

Phase IV - Rejecting Heavy Contaminants

This phase only needs to be run if there is a build-up of heavy contaminants in the Hydrapurge II body. This is indicated by excessive noise in the unit. Approximately one body volume should be drained from the unit.

Sample Ports

The end of the Selectpurge dewatering drum is the best inspection point for determining the operating condition of the detrashing system. The quantity and condition (size of contaminants, amount of fiber in contaminants, amount of water in contaminants, etc.) will give a good indication of how the system is running.

In addition, a sample line should be put into the extracted stock line to test consistency and quality of accepts from the Hydrapurge II.

7.7 AVOIDING OVER PRESSURIZATION



WARNING

The maximum design pressure of the Hydrapurge II is 75 PSI. Over pressurizing the unit will cause rupture, which could result in death or serious injury to anyone standing nearby

Causes of Over Pressurization

- Incorrect application
- Incorrect process control (valve sequence)
- Valved off or plugged stock lines
- Process conditions that are unusual

Maximum Hydrapurge Pressure

The maximum design pressure for Thermo Black Clawson's Hydrapurge II is as follows:

- Maximum design pressure for all models: 75 PSI.

8.0 MAINTENANCE

8.1 ROUTINE MAINTENANCE

Perform a general inspection of the equipment at least every three months or every 1,000 hours of running time. Locating and eliminating minor problems will extend the service life of the unit.

Periodic Inspection

Perform a general inspection and tightening of the machine twice a year. Locating and eliminating minor problems will assure long and dependable service. In many instances, periodic inspections will eliminate costly shut-downs and delays.

WARNING

Follow your prescribed safety procedures and those listed in this manual to prevent accidental starting while inspecting or servicing the unit.

Preparing for a Maintenance Check

To prepare for a maintenance check, shut down the unit according to “Normal Shut-Down” on page 58 and bring it to a zero mechanical state (ZMS) and lock out all sources of energy. Close and lock out all valves to prevent any possibility of stock or water entering the unit. Drain and depressurize the unit before performing any service work. A wash down of internal parts and surfaces may be required.

WARNING

The Hydrapurge II is a confined space which must not be entered. To ignore this warning risks severe personal injury or death.

Components Requiring Routine Maintenance

COMPONENT	SERVICE	FREQUENCY
bearings	lubricate	weekly
v-belts and sheaves	check tension, alignment, and wear	monthly
rotor	check clearances and wear	monthly
extraction plate	check for wear and plugged perforations	monthly
screw jack assembly	grease threads	before and after every use
slideways	clean and remove stock build-up	before and after every use
packing box	inspect sleeve and packing for wear	monthly

8.2 TROUBLESHOOTING

Troubleshooting Guide

CONDITION	CHECK FOR
low capacity, frequent plugging	- extraction plate worn, plugged holes, damaged deflector strip - speed of motor - rotor vanes worn or damaged - consistency and/or level of contaminants
excessive noise	- rotor and extraction plate clearance - mechanical failure of bearings, packing box - heavy debris build-up in main body
low power consumption	- low motor speed - v-belts slipping
high power consumption	- build-up of debris in main body - mechanical failure of bearings, packing box - rotor and extraction plate clearance - plugged light reject valve or line - no flow - debris caught under rotor or on rotor tips
excessive vibration	- unbalanced rotating assembly - rotating assembly not seated on drive shaft - loose hold-down bolts on drive assembly - excessive clearance in bearings

The following wear indicators will help you to determine when repairs are required:

- Change in motor load amperage from initial start-up readings.
- Change in the time required for stock extraction.
- Rounded edges on the top and bottom of rotor vanes.
- Worn holes in extraction plate.
- Clearance between extraction plate and rotor not between 0.020 inch and 0.060 inch.

8.3 SERVICE INSTRUCTIONS

Safety Guidelines

- Bring the unit to ZMS.
- Close and lock out all valves to prevent any possibility of stock or water entering the unit.
- Lubricating bearings while the unit is in operation is allowable only if the lube lines are piped to an outside safe location.
- Drain and depressurize the unit before performing any service work.

Rotor and Extraction Plate

Because the function of the Hydrapurge II is to concentrate and remove trash and debris from the furnish pulper, it is operating continuously in an abrasive and high wear environment. Although constructed of hardened chrome with wear resistant material on the vane faces, the rotor and extraction plate will wear at a faster rate than you may be accustomed to for other pulping units in the mill. Therefore, inspect these items frequently until you have established a routine.

Signs of Wear

- Motor load readings drop from initial start-up readings.
- Defibering efficiency drops off, indicated by poor quality accepts and more fiber in the rejects.
- A visual inspection of the rotor shows rounded edges on the vanes, and the extraction plate has worn areas around the perforations.
- Rotor/extraction plate clearance exceeds the recommendation of 0.020 inch to 0.060 inch.

The rotor can be rebuilt by Thermo Black Clawson or by any of our authorized service centers, located throughout the United States. Contact your Customer Service Representative at the Middletown, Ohio office for additional information.

The extraction plate has holes for the hold-down bolts drilled on both sides, allowing the extraction plate to be flipped when one side is worn. Deflector strips need to be installed on the second side before it is used.

To keep downtime to a minimum, we suggest that you have a spare rotor and extraction plate on hand.



WARNING

Follow your prescribed safety procedures and those listed in this manual to prevent accidental starting while inspecting or servicing the unit.

Preparing for a Maintenance Check

To prepare for a maintenance check, shut down the unit according to “Normal Shut-Down” on page 58 and bring it to a zero mechanical state (ZMS) and lock out all sources of energy. Close and lock out all valves to prevent any possibility of stock or water entering the unit. Drain and depressurize the unit before performing any service work. A wash down of internal parts and surfaces may be required.

Opening the Unit

The Hydrapurge II is furnished with a five-ton screw jack mechanism. This device will enable you to slide the drive, motor, rotor, extraction plate, and extraction chamber back from the Hydrapurge II body. Fully extended, this will travel a distance of approximately 30 inches. This will provide necessary space for maintenance personnel to perform any necessary repairs or adjustments on the unit.

Note: Motor electrical connection must be made with a flexible drop cord that is long enough to permit the motor and rotor assembly to travel a minimum distance of five (5) feet.

For some repairs, the drive unit must be removed from the Hydrapurge II body. The following steps should be followed:

- Check that all services are locked out and tagged.
- Remove the bolts from the extracted stock flange connections.
- Spray wash the slideways to remove stock and debris.
- Disconnect flange connections for the packing box water supply; drain the packing box.
- Remove the bolts holding the drive assembly to the base.
- Remove the bolts holding the extraction chamber to the main body.
- Use ratchet and socket wrenches on hex nut on the screw jack mechanism to slide the drive assembly away from the main body.

Rotor Adjustment

To adjust the bearing cartridge and rotor clearance, use the adjustment nuts located on the inboard side of the bearing stand.

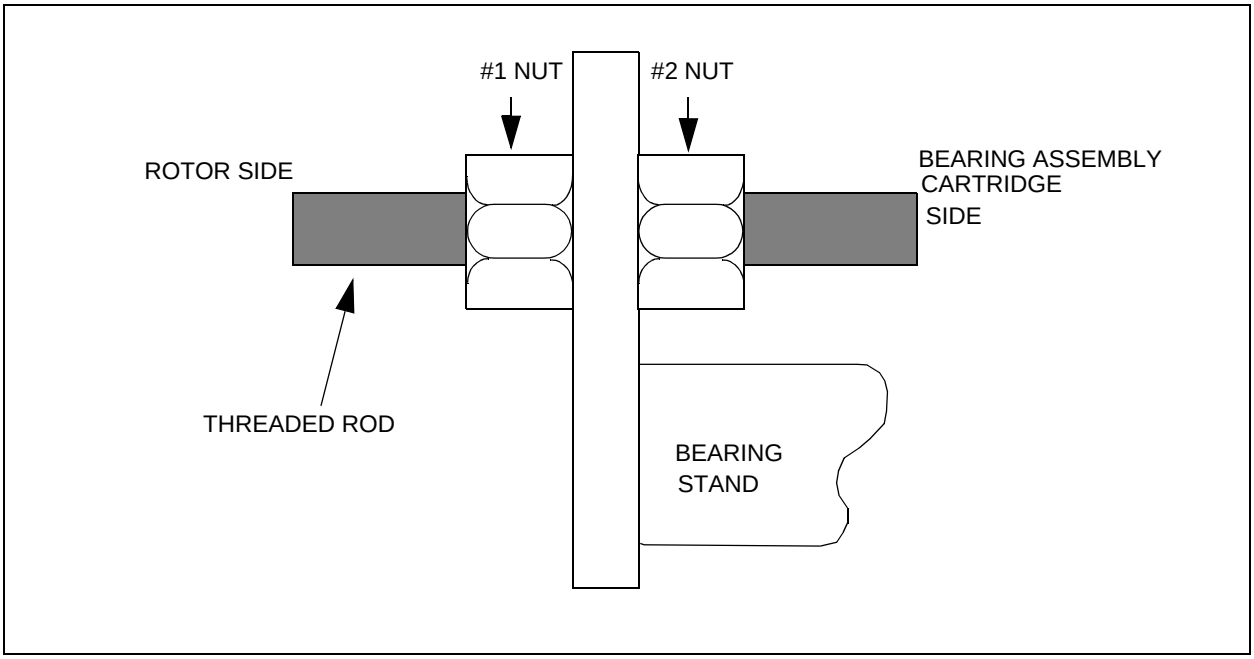

Cartridge Bearing Adjustment

To close rotor running clearance, loosen #1 nuts and tighten #2 nuts. To open rotor running clearance, loosen #2 nuts and tighten #1 nuts.

- With the unit locked out, rotate the rotor by hand using the sheaves.
- While doing this, adjust #1 nut and #2 nut to reduce the rotor gap until it can be felt rubbing the deflector strips on the extraction plate.
- Use a dial indicator to adjust the bearing assembly to 0.020 - 0.060 of an inch.
- After rotor adjustment, check sheave alignment.
- Physically measure rotor to bedplate clearance inside the unit.

The above procedure should not be mistaken as giving a uniform rotor gap because this will not be a measurement which would indicate rotor wear. To check for wear, open the unit to gain full access to inspect foil and deflector strip condition.

Closing the Unit

- Spray wash the slideways, extraction chamber flange, inside of main body, and the body/ extraction chamber flanges.
- Lubricate screw assembly.
- Perform a visual check to verify that all tools, parts, and hardware have been removed from inside the main body.
- Close the unit.
- Replace the bolts connecting the extraction chamber to the main body.
- Replace the bolts holding the drive assembly to the base. Verify that drive assembly has been put back into its original position before tightening the bolts to lock the assembly into place.
- Check that all valves are in good operating condition and that they are in correct position for start up (open or closed).
- Follow start-up procedures described in “Normal Start-Up” on page 57.

Inspection Port

The Hydrapurge II includes a hinged inspection port on the side of the main body. After the unit has been shut down, depressurized, and brought to Zero Mechanical State, this port can be opened to provide a quick inspection of the main body, rotor, and extraction plate, or to pressure wash the inside of the main body and the extraction plate.

Under no circumstances should anyone enter the Hydrapurge II through the inspection port.



WARNING

The Hydrapurge II is a confined space. Under no circumstances should anyone enter the Hydrapurge II through the inspection port. To ignore this warning risks severe personal injury or death.

Opening the Inspection Port

- Check to see that all services have been locked out and tagged and that unit is at zero mechanical state.
- Open heavies dump to drain unit.
- Loosen the five bolts on the inspection port and swing the bolts away from the port.
- Open the inspection port to perform any necessary service work.

Closing the Inspection Port

- Perform a visual check to verify that all tools, parts, and hardware have been removed from the main body.
- Clean the mating surfaces of the inspection port and the O-ring.
- Install O-ring into the groove.
- Close the inspection port.
- Swing bolts back into position over the port and hand tighten the bolts.
- Check the mating surfaces for uniform spacing.
- Finish tightening all bolts and check mating surface for proper seal.
- Follow correct procedure for start-up of unit.

Accessing the Rotor / Extraction Plate Area

- Remove the bolts from the body flanges.
- Remove the hold down bolts on the bottom of the drive assembly.
- Loosen the guide clamp on each side of the drive assembly base.
- Clean the plastic slides on the base.
- Use the connecting screw jack assembly to move the drive / extraction chamber to the full open position.
- Inspect the O-ring and replace if necessary.

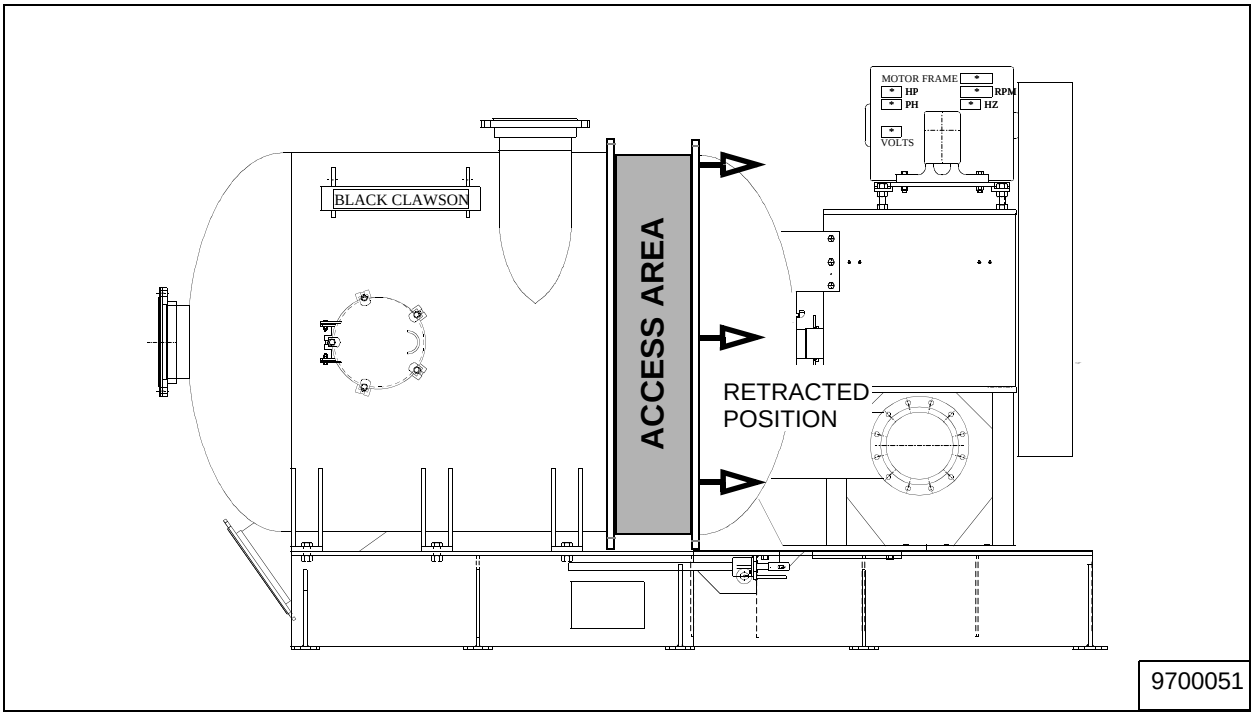

Accessing Rotor and Extraction Plate Area

Rotor Removal

See “Rotor Removal Illustration” on page 68.

- Remove the rotor cap.
- Invert the rotor cap.

- Insert the socket-head cap screws into the inverted rotor cap and tighten the socket-head cap screws. This will pull the rotor off of the shaft.

WARNING

To avoid injuring yourself seriously, don't place yourself in a position in which you can be struck by the rotor when the rotor is freed.

- Use a sling to capture and secure two arms of the rotor. Lift with a force just sufficient to remove the rotor's weight from the extension bar.
- Remove the socket-head cap screws and rotor cap.
- Remove the rotor.

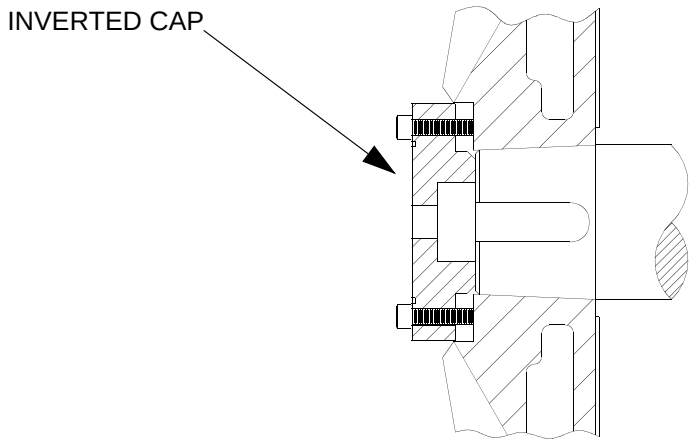

Rotor Removal Illustration

Rotor Assembly

- Clean the shaft and coat with a thin coating of grease.
- Replace the rotor and assemble hold down cap and center bolt.
- Tack weld rotor cap and center bolt.

NOTE: the welder's ground lead must be connected to the rotor and not the machine base.

- Replace the body flange O-ring and bolts.
- Replace the hold down bolts in the drive assembly base.

Plugging

WARNING

Never look into a plugged pipe or put your hand into a plugged pipe. The pipe could suddenly unplug and injure you very seriously.

The main function of the Hydrapurge II is to handle trash of varying sizes and shapes, therefore, there is a possibility that an oversized contaminant could get into the lines and cause a plug. A plug in the system can be determined by a decrease or absence of rejects to the Selectpurge. There are three possible places for the Hydrapurge II to plug. Plugs in the inlet line or in the light contaminant discharge line are handled with one procedure; a plug in the heavy contaminant discharge is handled in a very different manner.

Follow instructions carefully for unplugging the unit. There are different procedures, depending on the location of the plug.

Inlet Line or Light Discharge Line Plugging

- Turn control panel to manual mode. (Setting the panel to manual mode closes all valves except for the light reject valve.)
- Open wash water and inlet valves to flush out the inlet line back to the pulper tub.
- Flush remainder of the inlet line plus the light contaminant discharge line.
- Close the inlet line valve and check to see if flow of contaminants is re-established to the Selectpurge.
- Turn control panel back to auto mode.

Note: This procedure should clear most plugs. If, after several attempts to clear lines by this method, the unit remains plugged, it will be necessary to take the system off-line, lock out the machine and bring it to Zero Mechanical State, and manually clean out the lines.

Heavy Contaminant Discharge Line Plugging

- Turn control panel to manual mode.(Setting the panel to manual mode closes all valves except for the light reject valve.)
- Open drain/heavy contaminant discharge valve.



WARNING

Before opening this valve, depressurize the unit and make sure that no one is near the drain/heavy contaminant discharge valve.

Note: If the drain/heavy contaminant discharge valve remains plugged, take the unit off line, lock out the inlet and wash/dilution water valves, and bring the unit to Zero Mechanical State. Drain water from the body through the extraction chamber (a manual drain valve should be installed in the extracted stock line, ahead of the automatic valve). Open the unit by moving the drive assembly back on the jack screws. Manually unplug the dump valve.

8.4 PACKING BOX

Packing Box

The packing box consists of a lantern ring, packing, and packing gland. These components seal the drive shaft where it passes through the body of the unit. A packing sleeve is used to absorb the wear created by the packing. This sleeve is fitted either to the drive shaft or the outside diameter of the rotor hub when it extends through the packing area. The lantern ring contains openings that allow water to reach the packing and sleeve.

Packing Box Water

Packing box water must be clean, fresh water. We recommend that you equip this line with a valve, check valve, and rotometer to prevent plugging the line with stock in the event of loss of water pressure. You might want to interlock this to make sure that packing box water is on before starting the equipment.

NOTE: USE A CHECK VALVE IN ALL WATER SERVICE LINES.

Water Flow

A constant flow of water at the rate of one gallon per minute will prevent clogging the ring and provide proper lubrication of the packing. When the packing box is being repacked, clean the water ports in the lantern ring and test the water flow to the packing box.

NOTE: IT IS CRITICAL THAT THE REQUIREMENTS FOR CLARITY, FLOW, AND PRESSURE OF PACKING BOX WATER BE FOLLOWED.

Lantern Rings

Lantern rings are split to facilitate assembly into the packing box when replacement is necessary. Be sure the lantern ring has clearance around the shaft sleeve. After repacking the box, tighten the packing gland until the water flows out of the packing box in a slow steady trickle.

NOTE: DO NOT TIGHTEN THE PACKING GLAND TOO MUCH OR WATER WILL NOT FLOW AROUND THE SLEEVE AND LUBRICATE THE PACKING.

Replacing Packing

- Shut down and lock out the unit and all service lines. The unit must be at ZERO MECHANICAL STATE (ZMS).
- Shut off and lock out the water line to the packing box.
- Remove the packing gland, packing, and lantern ring.
- Clean the shaft and packing box. Check the diameter for grooves, out of roundness, and for wear. Any of these conditions will result in the packing box leaking after replacing the packing. Depending on the condition of the sleeve, replacement may be required.
- Cut the packing. Whenever possible, the packing should be cut on a mandrel the same size as the shaft. Any available round item can be used. If an exact size is unavailable, use a slightly smaller pipe or rod and build the diameter up using duct tape.
- If a mandrel is not available, use a packing cutter rather than laying the old piece of packing out and cutting a new one the same length. A good packing cutter will enable you to cut a 45

degree angle. Note that in the illustration below the laps of each ring are held together by the rings on either side. In the case of the first and last ring, it is the throat and the packing gland that hold the rings together. If a ring is cut slightly short, there would still be contact between the two ends of the packing if the ends are cut at a 45 degree angle. However, with butt cut ends there is no contact and a likelihood of a leak is increased.

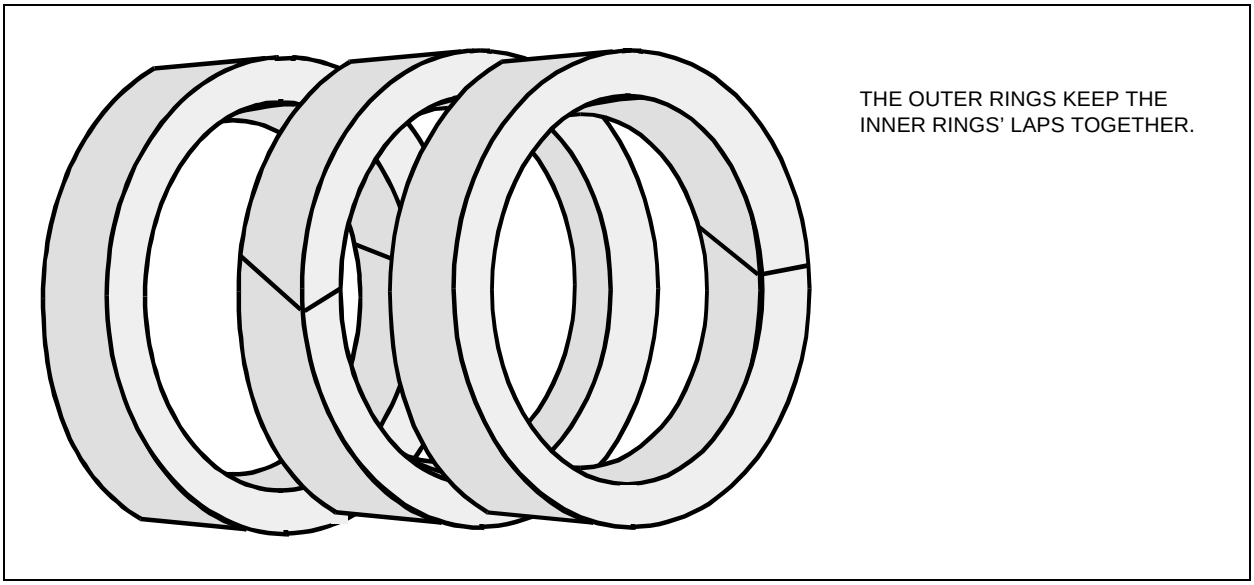

Packing

Installing Packing Gland

Before starting the packing process, check the certified drawings for the proper installation sequence of packing and lantern ring. The lantern ring must line up with the water inlet. It is usually unnecessary to lubricate the packing before installation. However, if the packing box is exceptionally deep (more than 6 rings) it may make installation and seating of the first ring a little easier if a small of amount of petroleum jelly (Vaseline) is applied to the inner surface of the packing or directly to the shaft itself. Never apply the lubricant to the outer surface of the packing–this could enable the packing to spin in the packing box. Install each ring individually, seating the first ring firmly. The laps should be alternated 180 degrees. Install the packing gland and tighten firmly, but not so tight that water cannot get between the packing and the sleeve. Turn on the water and adjust the water flow to a steady drip. If the water gushes out, adjust the water flow, not the packing gland! Start the unit and allow it to run for about 15 minutes before making any adjustments on the packing gland. In most instances, adjustments should be made to the packing box water rather than the packing gland.

8.5 V-BELT DRIVE

Misapplied or incorrectly assembled belts can over-load and cause overheating of the windings or the bearings. Follow instructions of the V-belt manufacturer carefully. A noisy drive should be corrected at once. Visual inspections are also helpful in finding trouble before a breakdown occurs. Rubber and some other belts are affected by oil and other liquids. For oily locations, use oil resistant belts. If the location is oily or dirty, use belts which are resistant to all petroleum derivatives. In case of overheating or bearing failures in the motor or drive shaft spherical roller bearings, check the belts as a possible cause.

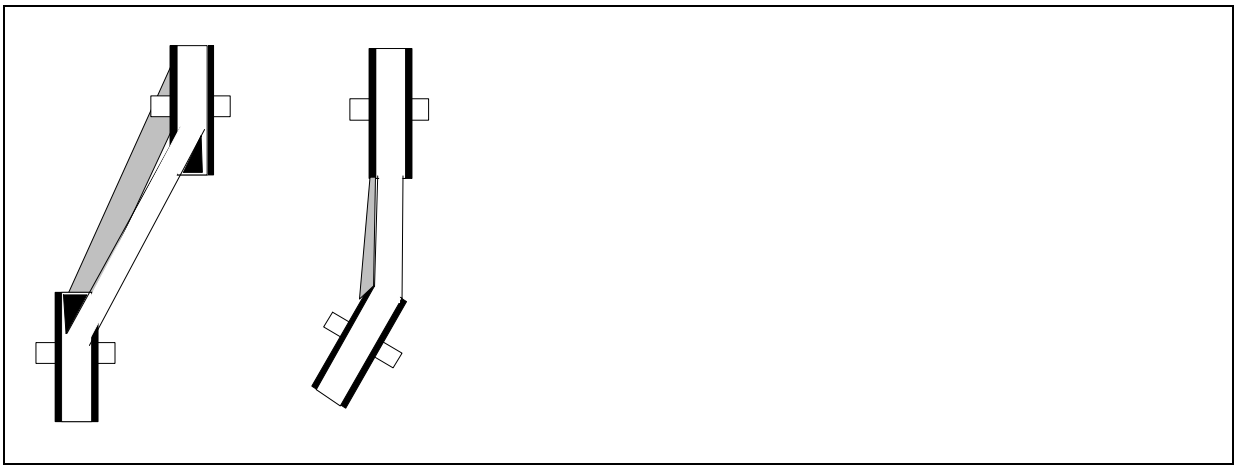

Misaligned Belts

When more than one belt is used on the same sheave they must all be matched (as to length). If one belt fails, the complete set of belts must be replaced with a set of matched belts. This is necessary to distribute the load among all the belts. Bearing overloading results from the use of belts of varying lengths on the same sheaves. It is possible to pull belts so tight that quick failure of the bearings or shafts will result. Sheave must be in line to keep from overloading the motor, as well as to get satisfactory service life from the equipment.

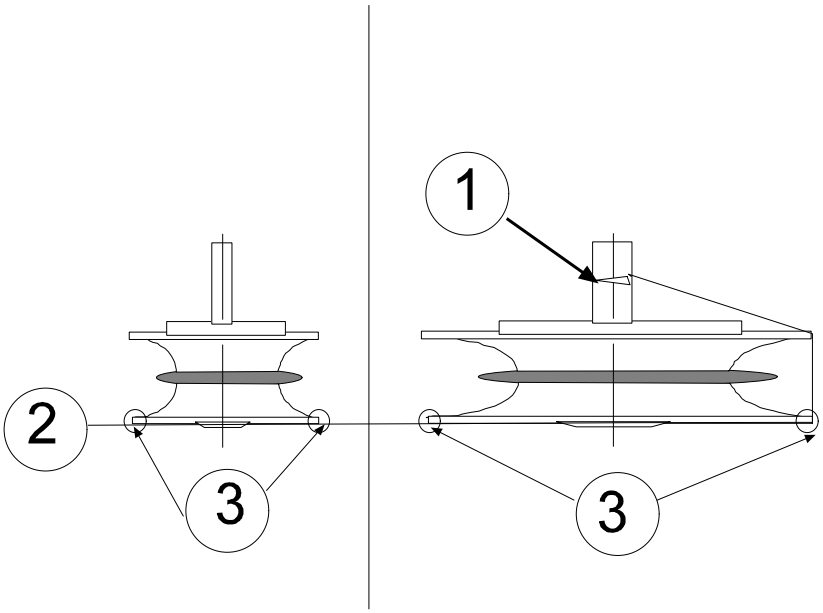

1. CORD TIED TO SHAFT 2. CORD 3. WHERE CORD TOUCHES PULLEYS

Sheave Alignment

When a suitable straight edge is not available, misalignment of sheaves can be detected readily with the aid of a cord as shown in the drawing to the right. Assuming that the shafts are parallel, as they should be, a light, strong cord secured around one shaft and held straight and tight along the sides of both sheaves should just touch at all points as shown. Each sheave can be checked by rotating it, and noting whether or not the rim contact with the cord is disturbed. If either of the rim contacts pull away, it indicates misalignment which must be corrected to obtain expected belt and equipment life.

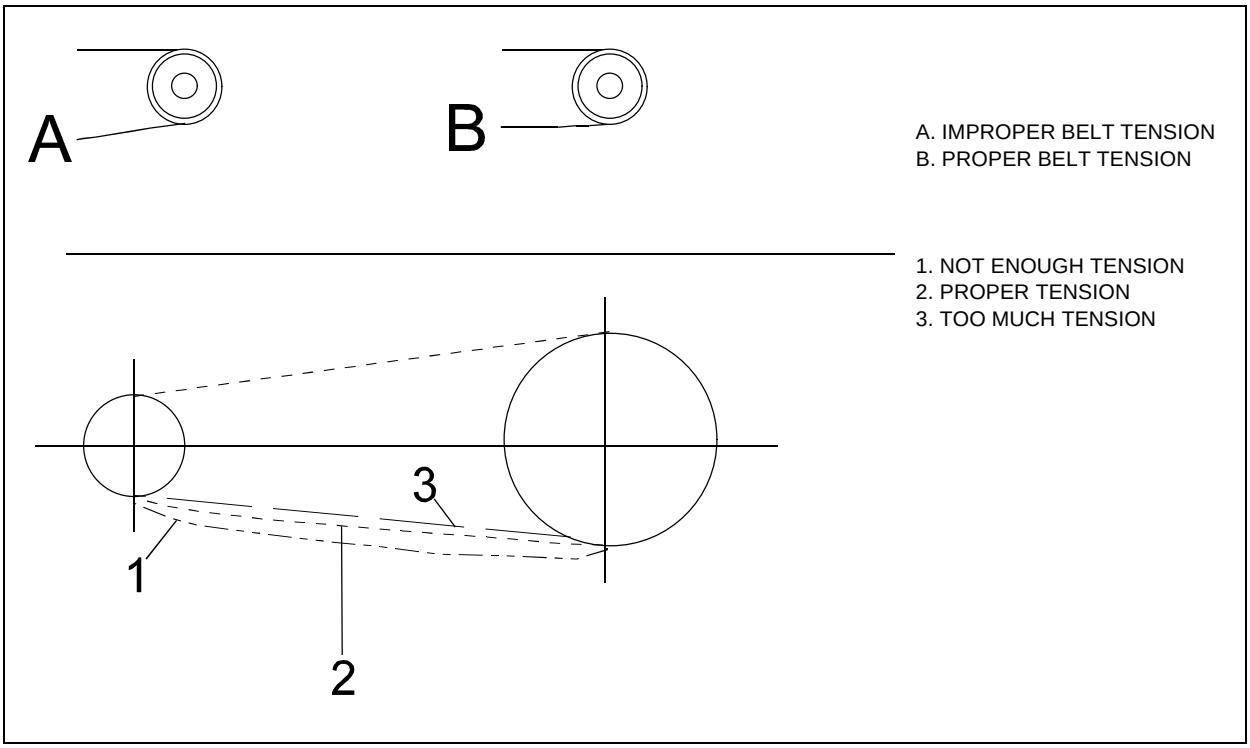

Belt Tension

Proper belt tension is important to provide full grip around the sheaves. While a V-belt does not depend on tension to provide grip, it is dependent on tension for the extent of its grip. As you can see from the diagrams, inadequate tension allows a V-belt to hang away from the bottom of a sheave, reducing the arc of contact. A properly adjusted V-belt is wrapped around the sheave in a full arc. Proper contact is important because horsepower ratings for the different sizes of V-belts are based on a 180 degree arc contact. Actually, this arc varies from one drive to another and allowance is made for the variation when the drive is engineered.

When a properly engineered drive is delivered to you, you must maintain that proper tension and proper contact arc. Otherwise, the belts will slip. Because many mills have no means to measure equipment in terms of pounds-pull, common practice is to measure by rule of thumb. Some of these rules are more superstition than science. Some are good. Perhaps the best one is this:

A slack V-belt feels dead when you thump it with your hand;

a properly taut V-belt has alive springiness.

V-Belt Drive

CONDITION	POSSIBLE CAUSE	TO CORRECT
belt slips (side-walls glazed)	oil on belts	replace belts
	not enough tension	increase tension
mismatched belts	new belts installed with old	replace belts in matched sets
sheave grooves worn unevenly or improper groove angle	shafts not parallel	replace sheaves
		align drive
belt turned over	broken cord caused by pry-ing	replace belts correctly
	impulse loads	apply proper tension
	misalignment	realign drive
	worn sheave grooves	replace sheaves
	excessive vibration	check drive and equipment mounting
		consider banded belts
belt breaks	shock loads	apply proper tension
	heavy starting loads	apply proper tension
	belt pried over sheaves	release tension and re-adjust
	foreign objects in drive	replace belts correctly
		provide drive shroud
belt wear	sheave grooves worn	replace sheaves
	mismatched belts	replace with matched belts
	belt slippage	increase tension
	sheaves misaligned	align sheaves
	oil or heat condition	eliminate oil
		ventilate drive

8.6 LUBRICATION

Use a lithium-based grease, NLGI 2. The following are some of the lubricants that meet the minimum requirements of this specification. Mobil - Mobilith SHC 220 and Texaco - Starplex 2. Note: We don't imply that all products are of the same quality.

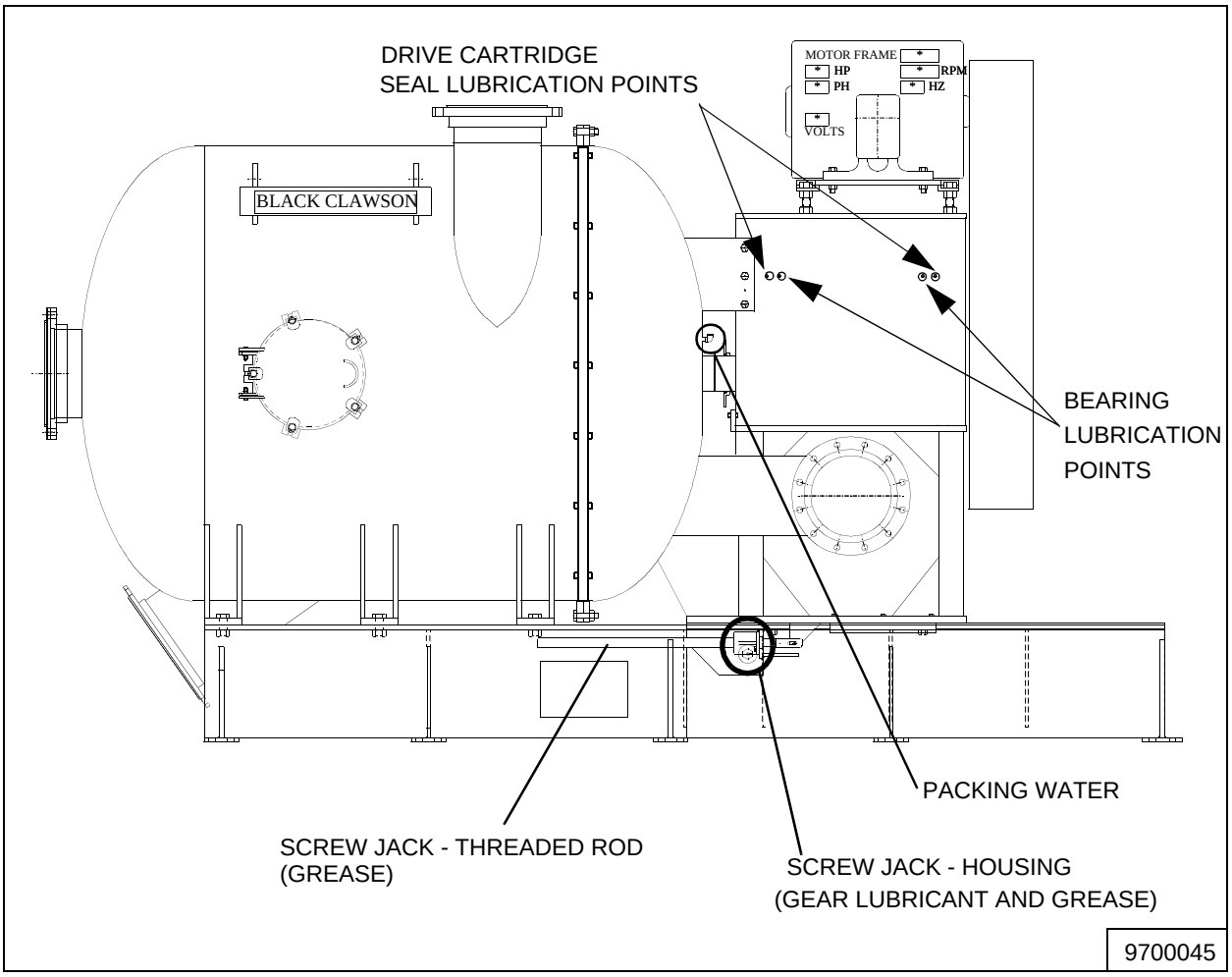

Lubrication Points

COMPONENT	SERVICE	FREQUENCY
bearings	lubricate	weekly
screw jack assembly	apply grease liberally to the screw threads to maintain free operation.	before and after every use
slides	check and keep free from stock buildup; clean and apply grease	before and after every use
cartridge drive	see certified drawings	

9.0 SERVICE PARTS

9.1 RECOMMENDED PARTS

We recommend that you keep the following parts on hand for repairs and routine maintenance. This list does not include specific part numbers for your unit. You should refer to your certified drawings for individual part numbers or, if you would like a list of part numbers for your unit, contact:

Customer Service Department

Thermo Black Clawson Inc.

605 Clark Street, Middletown, OH 45042-0160

Phone 1-513-424-7400

North America emergency 24-hour service: 1-800-448-5422

Global emergency 24-hour service: 1-513-391-0881

Fax: 1+513-422-1168

E-Mail: CUSTSERV@BLACKCLAWSON.COM

IMPORTANT: When ordering spare parts or requesting a parts list, refer to the certified drawings and give the item number, drawing number, and part description, along with the product numbers. (Product identification numbers include the serial number, shop order number and model number.) Generally, allow eight to twelve weeks for delivery.

Do not modify the equipment without written authorization from Thermo Black Clawson. Unauthorized modification may impair the function, shorten the machine life, and/or render built-in safety features useless.

Recommended Spare Parts

DESCRIPTION	RECOMMENDED QUANTITY TO STOCK
rotor	one per unit
extraction plate	one per unit
expansion bearing	one per unit
non-expansion bearing	one per unit
drive shaft with sleeve	one per unit
lantern ring	one per unit
door gasket	one per unit

10.0 CUSTOMER INPUT

10.1 QUALITY ASSURANCE THROUGH CUSTOMER INPUT

As a Thermo Black Clawson customer, you can help us toward our goal of providing high quality manuals that meet or exceed our customers' expectations. We would like to hear from you if you have suggestions or comments that would help us toward this effort. From procedures to safety issues and other areas, your input and concerns are important to us. Perhaps we haven't described something as much as you think we should have. Maybe you have a technique that you'd like to share with us. If you have input that would help us improve our manuals, write or fax your comments to us:

Thermo Black Clawson Inc.

Technical Writing

605 Clark Street

Middletown, OH 45042

Fax: 1+513-424-1168

11.0 GLOSSARY

Term	*Synonym/s* Definition/Function
bangor irons	The bangor irons sweep across the wear plate and extraction plate to keep contaminants from getting under the rotor and rotor body.
confined space	an area which has adequate size and configuration for entry; has limited means of access or egress; and is not designed for continuous occupancy.
EEPROM	Electrically erasable programmable read only memory
EMI	electromagnetic interference
expansion bearing	*free bearing, inboard bearing*
extraction plate	*bedplate, attrition plate* A perforated plate through which stock is forced by rotor and pump.
GPM	gallons per minute
HP	horse power
junk trap	*junk chamber, junk box, trashwell*
lantern ring	*seal water ring, packing box bushing* A nylon, Teflon, cast iron, or brass ring in a packing arrangement at which point water is injected.
NEMA	National Electrical Manufacturers Association
non-expansion bearing	*held bearing, out board bearing*
OCC	old corrugated container
OD T/D	oven dried tons per day
packing box	*stuffing box* A machined passage at the bottom center of a pulper which the shaft passes. The packing box contains compressed fibrous packing to control leakage.
packing box water	*gland water, seal water* Water added to a packing box at the lantern ring to cool and lubricate the packing and shaft sleeve.

Term	*Synonym/s* Definition/Function
packing sleeve	*wear sleeve* A replaceable sleeve mounted to the shaft on which the packing *rides*.
PSI	pounds per square inch
rotor	*vane plate* The propeller-like rotating element that sweeps the extraction plate.
T/D	tons per day
T.I.R.	total indicated runout (on a dial indicator)
wear strips	*deflector strips*
ZMS	zero mechanical state - (1) Every power source that can produce a machine member movement has been locked off; (2) Pressurized fluid (air, oil, or other) power lockoffs (shut-off valves), if used, will block pressure from the power source and will reduce pressure on the machine side port of that valve by venting to atmosphere or draining to tank; (3) All accumulators and air surge tanks are reduced to atmospheric pressure or treated as power sources to be locked off, as stated in paragraph 1 and 2; (4) The mechanical potential energy of all portions of the machine is at its lowest practical value--so that opening of pipe(s), tubing, hose(s), or actuation of any valve(s) will not produce a movement that could cause injury; (5) Pressurized fluid (air, oil, or other) trapped in the machines lines, cylinders, or other components is not capable of producing a machine motion upon actuation of any valve(s); (6) The kinetic energy of the machine members is at its lowest practical value; (7) Loose or freely movable machine members are secured against accidental movement; (8) A workpiece or material supported, retained, or controlled by the machine shall be considered as part of the machine if the workpiece or material can move or can cause machine movement.