21079910-1

ITEM No.		DRAWING No. - PART No.	QTY	MATERIAL	DESCRIPTION
*	*	*	*	********	SEE SHEET #2.

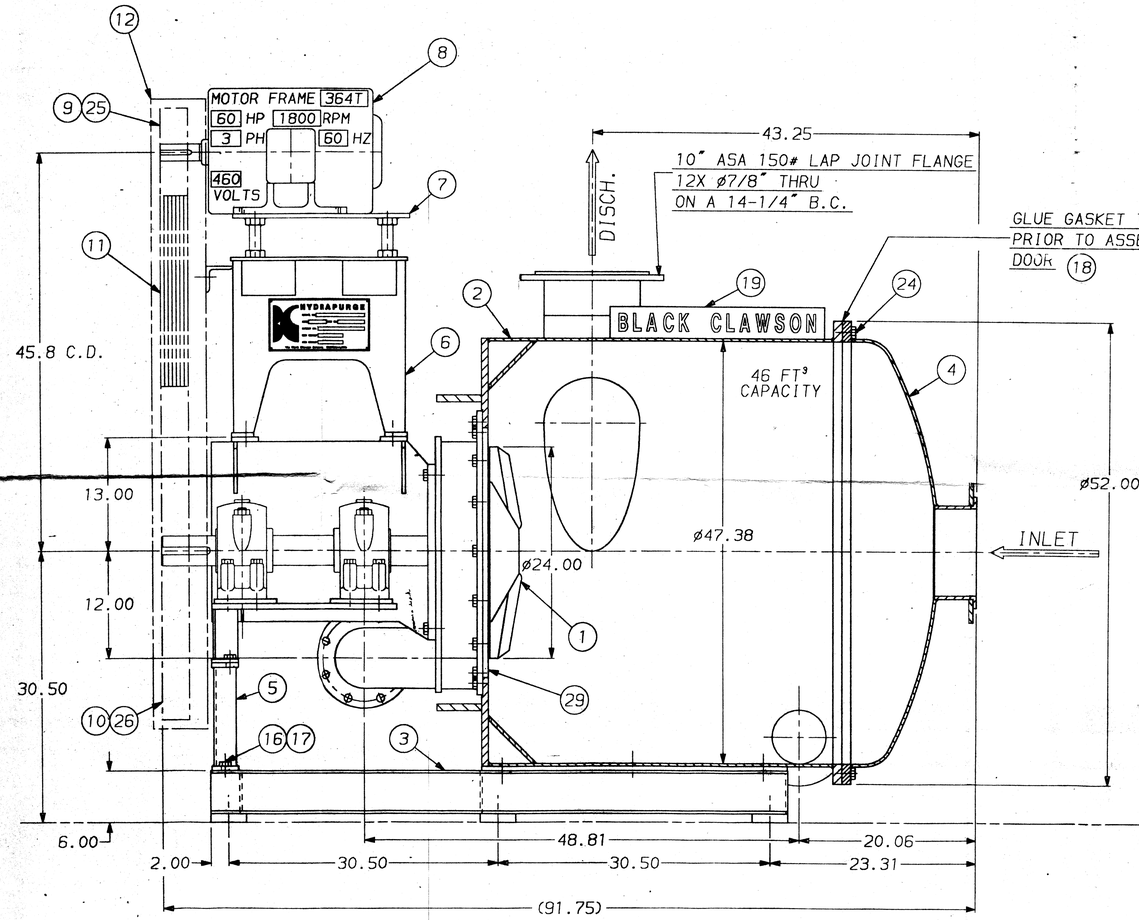

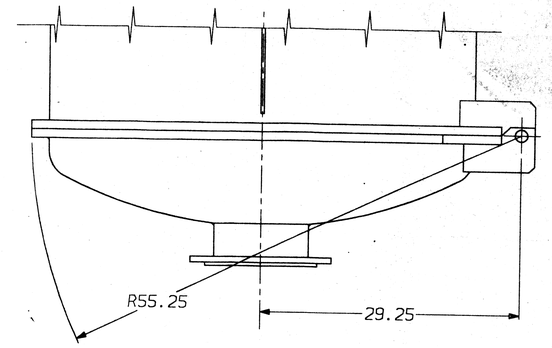

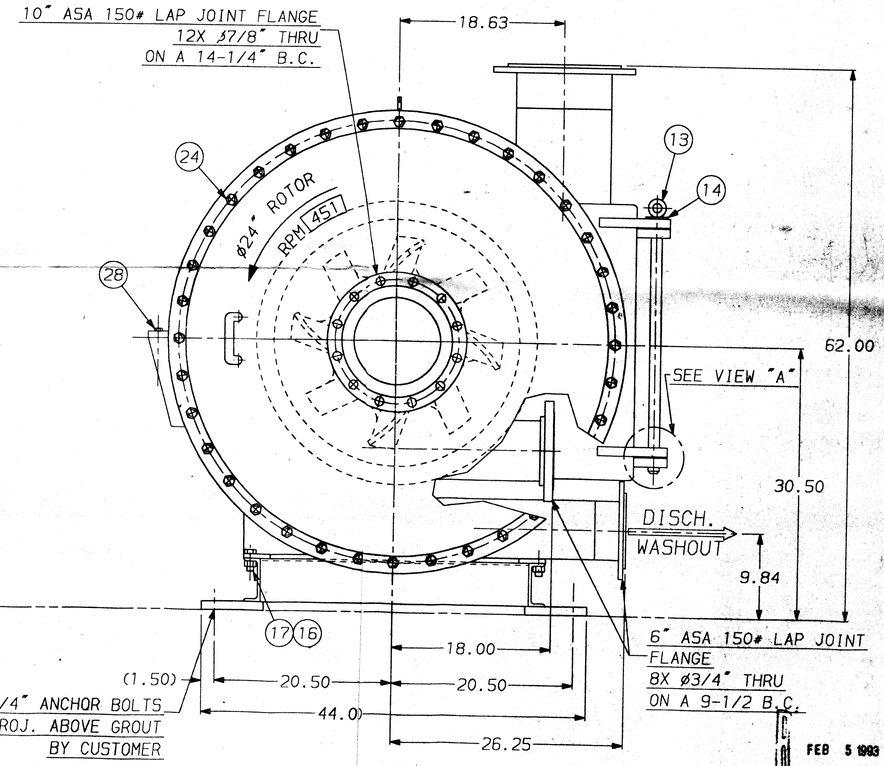

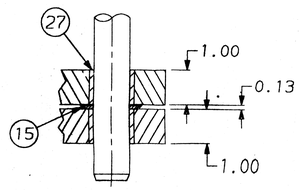

VIEW "A"

SCALE: 1/2 = 1

SEAL WATER- 1-2 GPM
WASH WATER REQUIRED- 15-20 PSI
DESIGN PRESSURE- 75 PSI

SHIPPING WEIGHT (LESS MOTOR) = 5000 lbs
LOADED WEIGHT (LESS MOTOR) = 7000 lbs

TOTAL WEIGHT FULL 8000 lbs.

THIS REVISED DRAWING IS CERTIFIED FOR USE IN CONSTRUCTION WORK FOR:
CUSTOMER-UNITED CORRSTACK INC.
MILL READING, PA.
CUSTOMER ORDER 140-AA
SHARTLE ORDER 2107991
SUPERSEDES DWG. NO. 21079910 REV.1
ORIGINALLY CERTIFIED ON 12-10-92

THE BLACK CLAWSON CO.
SHARTLE DIV.
MIDDLETOWN, OHIO

NEW CERTIFICATION DATE 1-28-93

C.A.D. DRAWING DO NOT UPDATE MANUALLY
DIMENSIONS ARE IN INCHES UNLESS OTHERWISE SPECIFIED
STANDARD TOLERANCES UNLESS OTHERWISE SPECIFIED
METRIC: WHOLE NUMBER ±1; ONE PLACE DECIMAL ±0.3; TWO PLACE DECIMAL ±0.15; ANGULAR ±0.5°
INCH: ONE PLACE DECIMAL ±0.04; TWO PLACE DECIMAL ±0.01; THREE PLACE DECIMAL ±0.005; ANGULAR ±0.5°
THESE LIMITS DO NOT APPLY TO ASSEMBLY OR FOUNDATION PLAN DRAWINGS

ORDER No. 2107991	REF DRG No. 18527910-1	SUPERSEDES	---
SERIAL No. 92-HP24-950-0168	USED ON ---	SUPERSEDED BY	---
CUSTOMER U.C., INC.	WEIGHT ---	PATTERN No.	---

CONFIDENTIAL
This document, including all information contained therein, is the exclusive and confidential property of The Black Clawson Company, and the document and information are not to be copied, reproduced or delivered to others in whole or in part, except with express written permission, and the document is to be returned promptly after having served the purpose for which delivered.
In addition, you agree that the modifications of the equipment relating to this print/document without the prior consent of The Black Clawson Company, which causes or contributes to a defect on such equipment, shall relieve The Black Clawson Company of its warranty obligations and to the extent that such unauthorized modification contributes directly or indirectly, to an injury to any person or damage to property, you hereby agree to indemnify and hold the Black Clawson Company harmless from any liability or claim resulting therefrom.

No.	REVISION	ZONE	DATE	BY	CHKD	SHT. No. APPD. BY
2	EQ. NO. WAS 02-015	*	1-27-93	SM	*/	*
1	UPDATED PER CUSTOMER APPROVAL	*	10DEC92	DKN	*	*

FEB 5 1993

EQUIP. No. 02-203

Black Clawson Company
SHARTLE DIVISION / STOCK PREP SYSTEMS / PULP MILL PRODUCTS
MIDDLETOWN, OHIO

TITLE ASSEMBLY, HP24-950 HYDRAPURGE II

DRAWN M.BROWN	DATE 08 OCT 1992	THIRD ANGLE PROJECTION	SCALE
CHECKED E.S.S.	DATE 12-14-92		1/4
APPROVED S.L.L.S.	DATE 12-15-92		

* DRG. No. 21079910-1 REV 2 SHEET 1 OF 2