technical bulletin

No. MB-311-E

Hydrapurge™ II Detrashing System

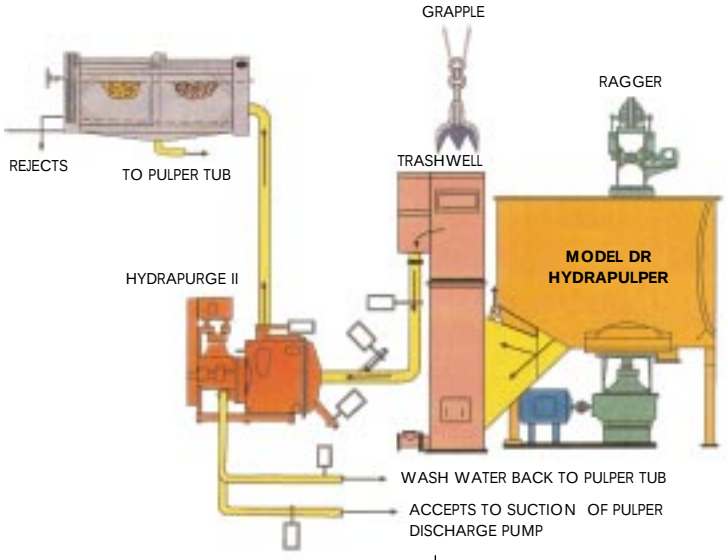

NOTE: This schematic illustrates one method of connecting the Hydrapurge II to the Hydrapulper,® The Hydrapurge II can also be connected directly to the Hydrapulper tub or other junk removal device.

The Kadant Black Clawson Hydrapurge II Detrashing System is designed to remove plastics, styrofoam and other lightweight contaminants as well as heavy debris, directly from the waste paper pulper tub. The contaminants are removed from the tub before they pass through the holes of the extraction bedplate. With constantly increasing amounts of plastic and other types of contaminants in waste paper furnish, the Hydrapurge II Detrashing System prevents contaminant build up in the pulper tub that results in loss of production, wasted power, excessive downtime for cleanout and increased wear. The Hydrapurge II Detrashing System is a proven low-attrition means of maintaining sweet waste furnish pulpers.

OPERATION

The Hydrapurge II Detrasher operates on a cycle basis, extracting stock directly from the pulper tub for a period of time. Fiber is accepted through a perforated bedplate located behind the rotor, sending it directly downstream. Plastics and other lightweight debris build up inside the body of the Hydrapurge II as the stock is extracted. Periodically, the contaminants are washed and purged to the Selectpurge™ Dewatering Drum for thickening and removal from the system. All cycle phases are sequenced and timed with a programmable controller.

FEATURES/BENEFITS

- Keeps pulper sweet; decreasing or eliminating downtime for cleanout
- Removes plastic contaminants in large pieces, with little degradation
- Large volume of contaminants and lightweight plastics removed at operating floor level
- Rotor efficiency & defibering cycle minimizes fiber loss in rejects
- Increased pulper throughput
- Protection against tramp metal damage and wear
- Simple operation; minimum controls required
- Can be retrofitted to most existing waste paper pulping systems
- Eases burden of downstream equipment by removing contaminants directly from pulper tub in their largest form
- Equipped with cartridge drive assembly with external rotor clearance adjustment
- Shaft and rotor are tapered for precision fit
- Side body inspection port allows easy inspection of wear parts for maintenance
- Jacking mechanism moves drive assembly back providing 2' (610mm) of space for easy rotor and bedplate maintenance
- Rated for 75psi (517kPa)
- 316L stainless steel body prevents corrosion
- Chrome rotor and extraction plate for wear resistance
- Reversible extraction plate for extended use

KADANT BLACK CLAWSON

Hydrapurge™ II Detrashing System

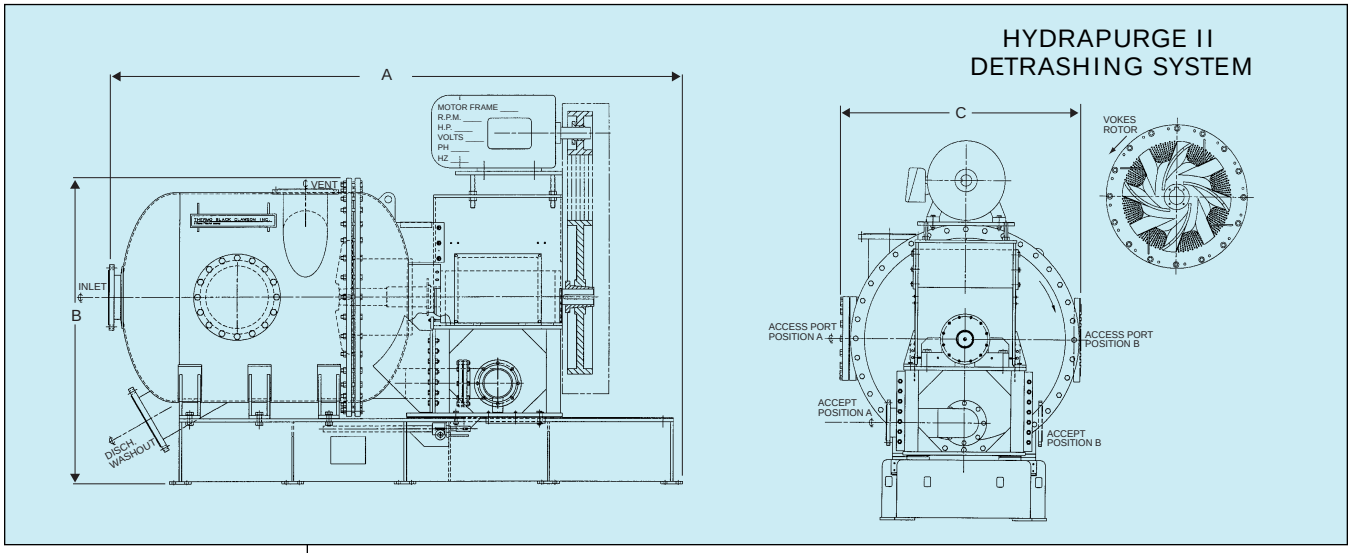

Model		Dimensions A	B	C	Ship Weight lb/kg	Oper. Weight lb/kg
24-950	in.	132.3	72.1	58.5	9500	13000
	mm	3360	1832	1486	4309	5897
33-3000	in.	165.0	88.6	72.2	11750	17500
	mm	4191	2249	1833	5330	7938
42-5000	in.	179.8	110.8	83.4	14000	22000
	mm	4567	2813	2118	6350	9979

Model		Dimensions A	B	C	D	Ship Weight lb/kg	Oper. Weight lb/kg
3000	in.	131.7	64.2	78.9	122.3	7000	10000
	mm	3345	1630	2004	3106	3175	4535
4500	in.	187.9	64.2	78.9	122.3	8000	11700
	mm	4772	1630	2004	3106	3630	5310
5000	in.	187.9	96.2	103.5	158.2	13300	20400
	mm	4772	2442	2628	4018	6030	9255

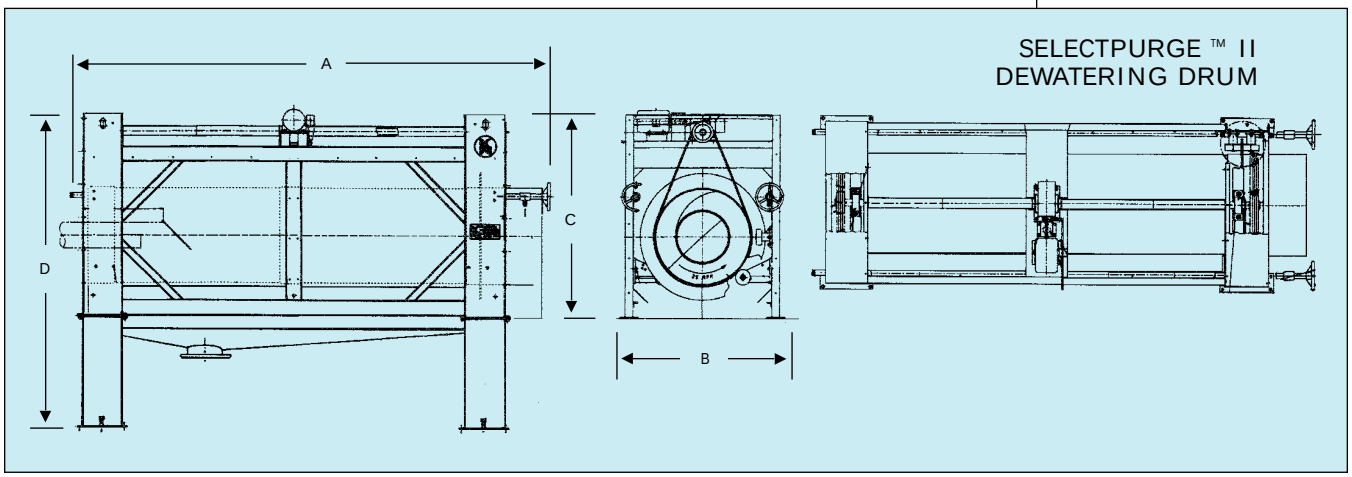

GENERAL DIMENSIONS - NOT CERTIFIED
FOR CONSTRUCTION OR INSTALLATION

GUARDS OMITTED FOR CLARITY BUT
PERIMETER GUARDS ARE RECOMMENDED

KĀDANT
BLACK CLAWSON

7312 Central Parke Boulevard, Mason, OH 45040 USA +1 513.229.8100 Fax +1 513.229.8194 www.kadantbc.com