21079910-2

ITEM No.		DRAWING No. PART No.	QTY	MATERIAL	DESCRIPTION
21	*	1501757	1	ZINC	EQUIPMENT NAMEPLATE.
22	*	1503607	2	ZINC	DANGER SIGN.
23	*	1503608	2	ZINC	WARNING SIGN.
24	*	1001707	36	18-8 STN STL	HEX HEAD CAP SCREW- 3/4-10NC-2A X 2-1/2 LG.
25	*	1015824	1	CARBON STL	BUSHING, E TYPE QD #2 3/8 SHAFT, 5/8 X 5/16 KW.
26	*	1015940	1	CARBON STL	BUSHING, F TYPE QD #3-7/16 SHAFT 7/8 X 3/16 KW.
27	*	1503084	4	CARBON STL	BEARING, JOURNAL.
28	*	1001506	1	18-8 STN STL	HEX HEAD CAP SCREW- 1/2-13NC-2A X 2 LG.
29	*	X11563A5001	1	410 STN STL	BEDPLATE, EXTRACTION WITH #1/4 HOLES.
30	*	1503612	2	ZINC	WARNING SIGN.
31	*	1503613	2	ZINC	DANGER SIGN.
32	*	1026602	60	18-8 STN STL	DRIVE SCREW- #6-2A X 3/8 LG.
33	*	1503293	1	PLASTIC	SAFETY INSTRUCTIONS.
34	*	1505009	1	PAINT	PAINT- PORTER 308, PRIMER.
35	*	1505118	1	PAINT	PAINT- PORTER 4361, INTERMEDIATE COAT.
36	*	1505119	1	PAINT	PAINT- PORTER 4310, COLOR: VERDE GREEN 3A099V.
37	*	1600817	1	316 STN STL	CUST. EQUIPMENT TAG

ITEM No.		DRAWING No. PART No.	QTY	MATERIAL	DESCRIPTION
1	*	3014413	1	316L STN STL	SUB-ASSEMBLY, DRIVE AND ROTOR.
2	*	3010825	1	316L STN STL	TANK.
3	*	X11263A3001	1	CARBON STL	BASE.
4	*	2006431	1	316L STN STL	DOOR.
5	*	2006433	1	CARBON STL	LEG, SUPPORT.
6	*	X29403Z3022	1	CARBON STL	STAND, MOTOR.
7	*	X25363A3003	1	CARBON STL	PLATE, MOTOR MOUNTING.
8	*	BY CUSTOMER	REF	*******	MOTOR- 60 HP, 1200 RPM, 364T FRAME.
9	*	1017515	1	CARBON STL	SHEAVE, DRIVE 9.75 O.D., 5V 4 GROOVE.
10	*	1017530	1	CARBON STL	SHEAVE, DRIVEN 37.5 O.D., 5V 4 GROOVE.
11	*	1019522	1	RUBBER	BELT, MATCHED SET OF 4-5VX-1700.
12	*	X19703Z3019	1	CARBON STL	GUARD, BELT.
13	*	2006142	1	CARBON STL	PIN, HINGE.
14	*	1008612	1	18-8 STN STL	TYPE A PLAIN WASHER NARROW - 1-1/4.
15	*	1503083	2	STL/TEFLON	BEARING, THRUST.
16	*	1000604	8	S.A.E. GR.2	HEX HEAD CAP SCREW- 3/4-10NC-2A X 1-3/4 LG.
17	*	1036806	8	CARBON STL	HEAVY HEX FULL NUT- 3/4-10NC-2B.
18	*	2005442	1	NEOPRENE	GASKET, TANK.
19	*	1500013	2	ZINC	CORPORATE NAMEPLATE.
20	*	1500017	1	ZINC	CORPORATE EMBLEM.

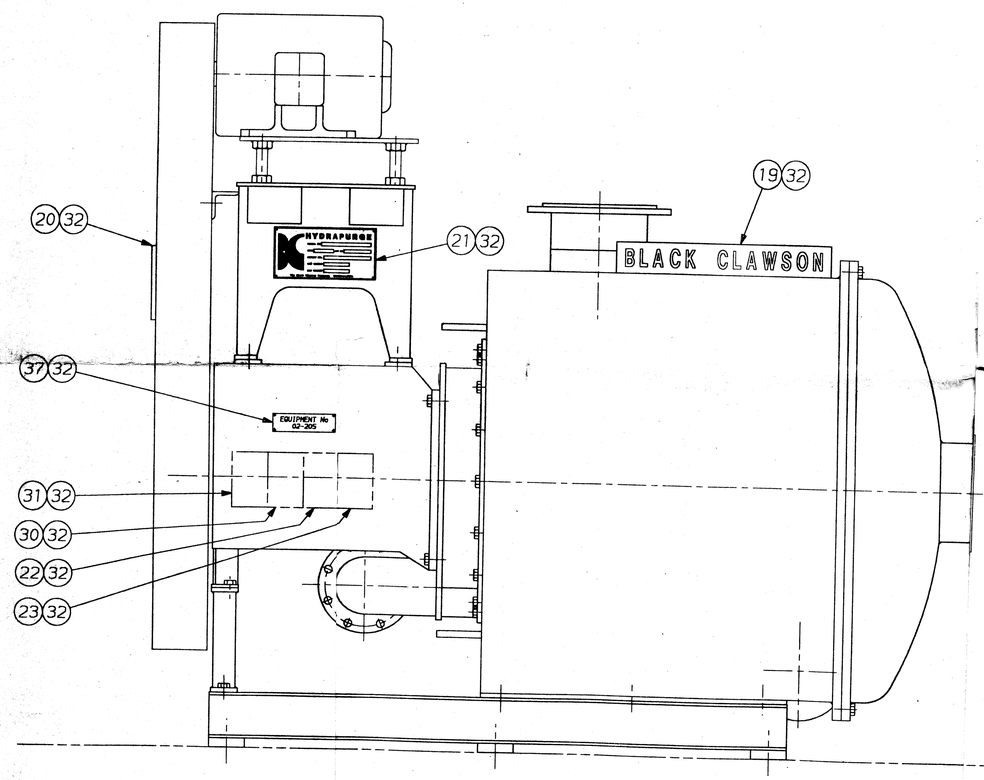

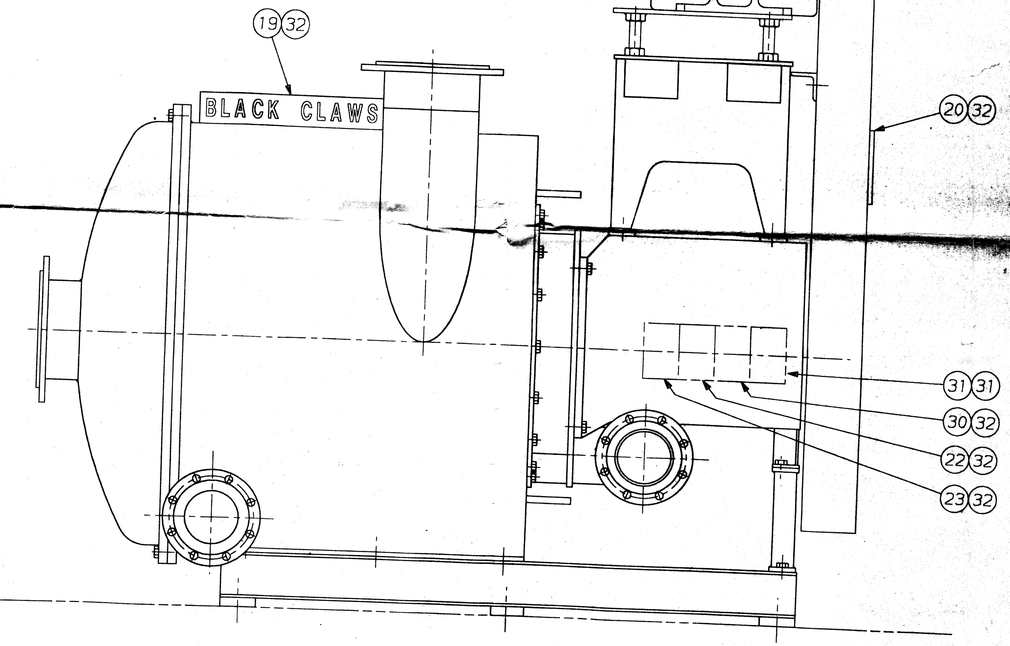

EQUIP. No. 02-205

FEB 5 1993

THIS REVISED DRAWING IS CERTIFIED FOR USE IN CONSTRUCTION WORK FOR:

CUSTOMER-UNITED CORRSTACK INC.
MILL READING, PA.
CUSTOMER ORDER 140-AA
SHARTLE ORDER 2107991
SUPERSEDES DWG. NO. 21079910 REV.1
ORIGINALLY CERTIFIED ON 12-10-92

THE BLACK CLAWSON CO.
SHARTLE DIV.
MIDDLETOWN, OHIO

NEW CERTIFICATION DATE 1-28-93

C.A.D. DRAWING DO NOT UPDATE MANUALLY

DIMENSIONS ARE IN INCHES UNLESS OTHERWISE SPECIFIED
STANDARD TOLERANCES UNLESS OTHERWISE SPECIFIED

METRIC		INCH	
WHOLE NUMBER	±1	ONE PLACE DECIMAL	±0.04
ONE PLACE DECIMAL	±0.3	TWO PLACE DECIMAL	±0.01
TWO PLACE DECIMAL	±0.15	THREE PLACE DECIMAL	±0.005
ANGULAR	±0.5°	ANGULAR	±0.5°

THESE LIMITS DO NOT APPLY TO ASSEMBLY OR FOUNDATION PLAN DRAWINGS

ORDER No. 2107991	REF DRG No. 21527910-2	SUPERSEDES	---
SERIAL No. 92-HP24-950-0169	USED ON ---	SUPERSEDED BY	---
CUSTOMER U.C., INC.	WEIGHT ---	PATTERN No.	---

CONFIDENTIAL

This document, including all information contained thereon, is the exclusive and confidential property of The Black Clawson Company, and the document and information are not to be copied, reproduced or delivered to others in whole or in part, except with express written permission, and the document is to be returned promptly after having served the purpose for which delivered.

In addition, you agree that the modification of the equipment relating to this print/document without the prior consent of The Black Clawson Company, which causes or contributes to a defect on such equipment, shall relieve The Black Clawson Company of its warranty obligations and to the extent that such unauthorized modification contributes to, directly or indirectly, to an injury to any person or damages property, you hereby agree to indemnify and hold The Black Clawson Company harmless from any liability or claim resulting therefrom.

No.	REVISION	ZONE	DATE	BY	CHKD	SHT. No. APPD. BY
*	SEE SHEET #1					

Black Clawson Company
SHARTLE DIVISION / STOCK PREP SYSTEMS / PULP MILL PRODUCTS
MIDDLETOWN, OHIO

TITLE ASSEMBLY, HP24-950 HYDRAPURGE II

DRAWN M.BROWN	DATE 09 OCT 1992	THIRD ANGLE PROJECTION	SCALE
CHECKED E.S.S.	DATE 12-14-92		1/8
APPROVED S.L.L.S	DATE 12-15-92		
* DRG. No. 21079910-2		REV 2	SHEET 2 OF 2

BCC.D

PLOTTED: 28 JAN 1993 - 08:09:49 - S.MACHEN