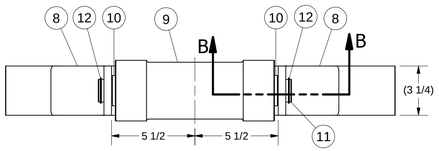

DETAIL A
ROLLER DETAIL

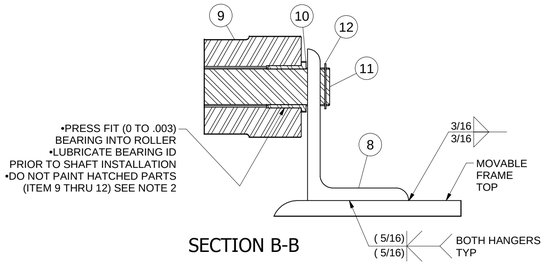

SECTION B-B

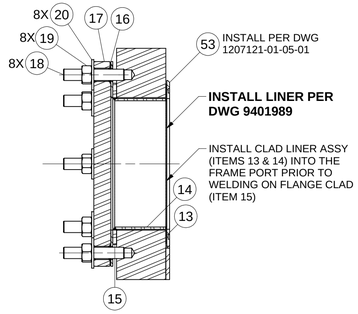

SECTION E-E
(2 PLCS: 1F & 2F W/FLANGE)
(2 PLCS: 3F & 4F W/O FLANGE)

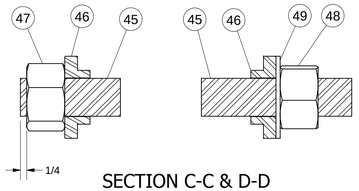

SECTION C-C & D-D
14 PLACES
USE DRAWING 9401011
Ø1-1/2" COMPRESSION BOLT ASSEMBLY

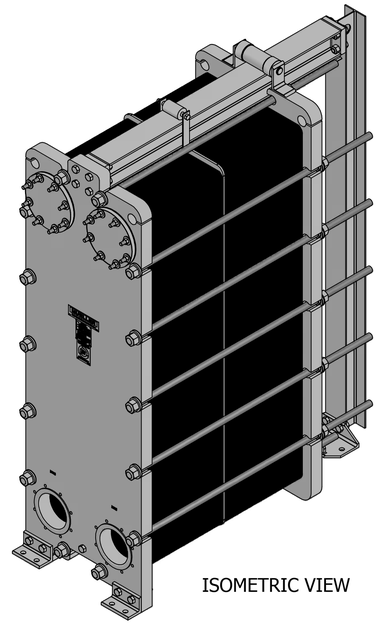

ISOMETRIC VIEW

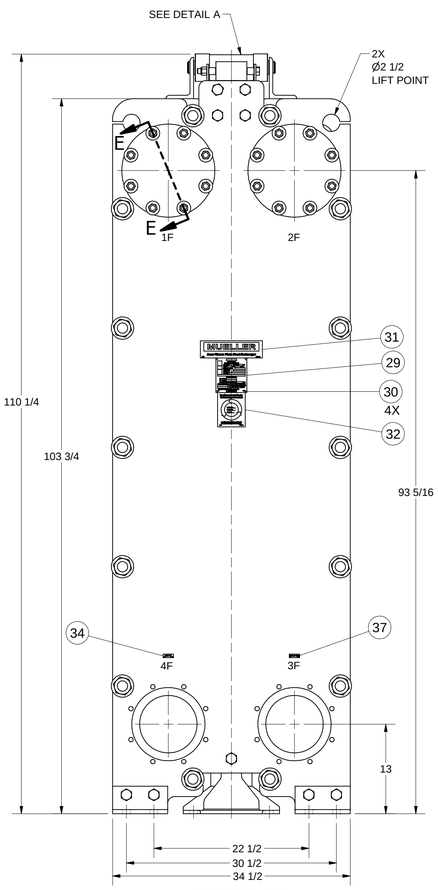

FRONT VIEW

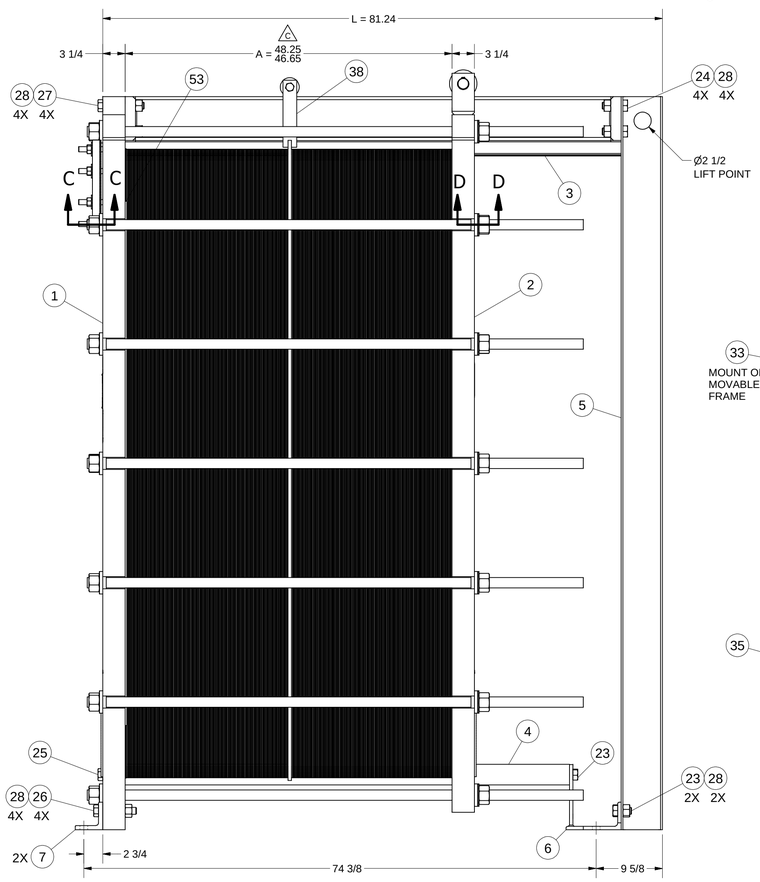

SIDE VIEW

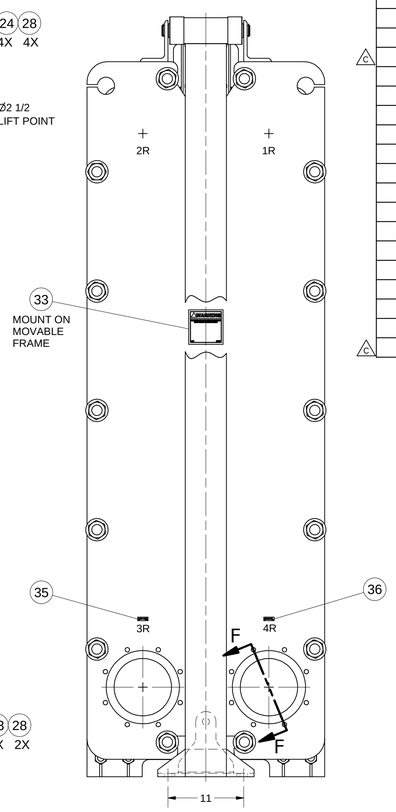

BACK VIEW

PARTS LIST

ITEM NO.	QTY	PART NO.	DESCRIPTION	MAT'L TYPE	DOC. REQ'D	DWG NO.
1	1	9401956	FR FXD AT217-150 MACH 8" @ 1,2,3,4F 3-1/4" THK	CS SA516 GR.70 NORMALIZED	MTR	9401956
2	1	9401957	FR MVB AT217-150 MACH 8" @ 3R & 4R 3-1/4" THK	CS SA516 GR.70 NORMALIZED	MTR	9401957
3	1	9401920	UPPER GUIDE BEAM ASSY AT217 72" LG	W6x25 HRCS A36 + TEE 304 SS		9401918
4	1	9401951	LWR GUIDE TUBE ASSY Ø3" X 64-1/2" LG	304/304L SS SA249W		9401949
5	1	9401958	SUPPORT REAR BEAM AT217-150 W6X15	HRCS A36		9401958
6	1	9401987	MOUNT REAR SUPPORT DROP DOWN WELDMENT AT217-150 1/2" THK	HRCS A36		9401987
7	2	9401319	MOUNTING FRONT FRAME ANGLE 5/8"X4"X4" X 8"LG	HRCS A36		9401319
8	2	9401985	HANGER ROLLER ANGLE L6" X 4" X 1/2"	HRCS A36		9401985
9	1	9401344	ROLLER Ø4 X 10-1/2" LG	304 SS SA479		9401344
10	2	9401368	BEARING FLANGED SLEEVE 1-1/2"ID X 1-3/4"OD X 1-1/2"LG, Ø2" FLG 3/16"THK	BRONZE ALLOY 932 (SAE 660)		
11	1	9401346	SHAFT ROLLER AT307 & AT314 Ø1-1/2" X 12-3/4" LG GROOVED ENDS	304 SS SA479		9401346
12	2	9401369	RING RETAINING EXTERNAL 1-1/2" X .05"THK ASME B18.27.1	15-7 OR 17-7 PH SS		
13	4	9401990	FLANGE FACING 8" AT217 16GA	316/316L SS 2B SA240	MTR	9401444
C 14	4	9401991	SLEEVE CLAD 8" AT217 8" PIPE SCH 10S X 3-3/8" LG	316/316L SS SA312W	MTR	9401989
15	6	9861561	FLANGE CLAD 8" AT65WL 1/4" THK	316/316L SS HRAP SA240	MTR	9401445
16	2	9804067	GASKET FLANGE 8" .125" THK	BUNA-N FDA WHITE	COC	BH00014
17	2	9806493	FLANGE BLIND 8" CL 150 RF ANSI B16.5	316/316L SS SA-182	COC	
18	16	9806430	STUD THREADED 3/4-10NC X 4" LG CL.2 (ALL-THREAD)	CS ZINC PLATED SA-193-B7	MTR	
19	16	9806453	NUT HEAVY HEX 3/4-10NC	CS ZINC PLATED SA-194-2H	COC	
20	24	3204013	WASHER FLAT 3/4"	CS ZINC PLATED		
21	2	9401993	STUB END 8" SCH 10 TYPE A CLAD SLEEVE (CUT-TO-LENGTH 3-1/4" LG)	316/316L SS SA403	COC	9401993
22	2	9401988	GASKET PORT NBR-FDA AT217 10.00" X 9.25" X 1/8" THK	NBR-FDA DURO 73±5	COC	9400423
23	3	9401999	SCREW CAP HH 1-8UN X 2" LG	CS ZINC PLATED A325 GR.1		
24	4	9402002	SCREW CAP HH 1-8UN X 3" LG	CS ZINC PLATED A325 GR.1		
25	1	9860068	SCREW CAP HH 1-8UN X 5" LG	CS ZINC PLATED A325 GR.1		
26	4	9812220	SCREW CAP HH 1-8UN X 5-1/2" LG	CS ZINC PLATED A325 GR.1		
27	4	9401342	SCREW CAP HH 1-8UN 6" LG	CS ZINC PLATED SA-193-B7		
28	14	9804609	NUT HEAVY HEX 1-8UN CL.2B	CS ZINC PLATED SA-194-2H		
29	1	9806662	PLATE DATA 'ASME/PHE' 20GA X 5" X 4.5"	304 SS		
30	4	8801929	STUD DRIVE-LOK #4 Ø5/16 RND HEAD	304 SS		
31	1	9830105	PLATE NAME 'MUELLER/ACCU-THERM' LGE 9" X 2.5" X .005" THK	MYLAR W/3M#468 ADHESIVE		
32	1	9830028	LABEL 'RECYCLE PART' 4" X 5" X .005" THK	MYLAR W/3M#468 ADHESIVE		
33	1	9830107	LABEL 'WARNING' 5" X 5" X .005" THK	MYLAR W/3M#468 ADHESIVE		
34	1	9804765	LABEL 'HOT IN' 1.5" X .5 "X .005"	MYLAR W/3M#468 ADHESIVE		
35	1	9804766	LABEL 'HOT OUT' 1.5" X .5" X .005" THK	MYLAR W/3M#468 ADHESIVE		
36	1	9804763	LABEL 'COLD IN' 1.5 "X .5" X .005" THK	MYLAR W/3M#468 ADHESIVE		
37	1	9804764	LABEL 'COLD OUT' 1.5" X .5" X .005" THK	MYLAR W/3M#468 ADHESIVE		
C 38	1	1207121-01-02-01-038	DIVIDER PLATE ASSY AT217 W/GASKET GROOVE 1/2" THK	CS PAINTED W/316L SS INSERTS	MTR	1207121-01-04-01
39	183	9401819	PLATE .4MM 217H PUNCHED R1234	316/316L SS SA240	COC	
40	184	9401821	PLATE .4MM 217V PUNCHED R1234	316/316L SS SA240	COC	
41	1	9401923	PLATE .4MM 217V PUNCHED R1200	316/316L SS SA240	COC	
42	2	9401924	PLATE .4MM 217V PUNCHED R0034	316/316L SS SA240	COC	
43	368	9401925	GASKET HX 217 FLOW NBRP	NBRP (PEROXIDE CURED)	COC	
44	2	9401926	GASKET HX 217 END NBRP	NBRP (PEROXIDE CURED)	COC	
45	14	9400834	ROD ALL THREAD 1 1/2-8UN X 72" LG ANSI B1.1 CLASS 2 THD	17-4 SS H1100/H1150 SA564	MTR	ASSY 9401011
46	28	9830335	WASHER LOCK COMPRESSION 1-1/2" (Ø3-1/4" RND)	304 SS SA479		SD0000699
47	14	9402004	NUT HEAVY HEX 1 1/2-8UN	304 SS SA-194 GR.8	COC	
48	14	9807644	NUT HEAVY HEX 1 1/2-8UN	ALUM BRONZE ALLOY C630 SB150	COC	SD0000074
49	14	3200273	WASHER FLAT 1.562"ID X 3.250" OD .14" THK	304 SS		
50	210 OZ	9831120	PAINT HS BLUE WILKOTHANE PANTONE 288	POLYURETHANE		
51	4	9818008	SCREW CAP HH 3/4-10NC X 7-1/2" LG	CS ZINC PLATED SAE GR.5		
52	4	3204020	NUT HEX 3/4-10NC	CS ZINC PLATED		
C 53	1	1207121-01-02-01-053	SHIM PLATE ASSEMBLY AT217	SS SA240	MTR	1207121-01-05-01

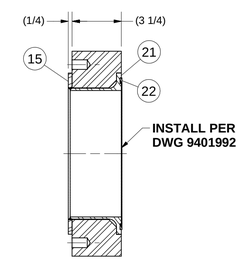

SECTION F-F
(2 PLCS: 3R & 4R)

NOTES:
1. ALL DIMENSIONS ARE IN INCHES UNLESS SPECIFIED OTHERWISE.
2. FRAME IS DESIGNED PER ASME SECTION VIII, DIV.1
3. DO NOT INSTALL ROLLER ASSY ITEMS 9-12 PRIOR TO SANDBLAST. USE TEMPORARY ROD:
   - SANDBLAST ALL EXTERIOR C/S SURFACES AND CLEANING-OFF (REMOVE) ALL GRIT.
   - PAINT ALL C/S SURFACES WITH WILKOTHANE HS BLUE PAINT. ACHIEVE 3-5 MILL DRY FILM THICKNESS.
4. PLATE PACK: ITEMS 39-44.
5. ITEMS 51, 52 AND 20 (QTY-8) ARE USED FOR SHIPPING PALLET HARDWARE.
6. EST EMPTY WT: 12,004 LBS

DRAWN BY	D.A. BROWN	DATE	9/4/2012
DESIGN REVIEWED BY	C. KEULER	DATE	9/5/2012
PROCESS REVIEWED BY		DATE	
STRUCTURAL REVIEWED BY		DATE	

TITLE
ACCU-THERM ASSEMBLY DETAIL AT217-150 DATA SHEET NO. 164435-01.02A

This drawing and any print thereof is the property of the PAUL MUELLER CO.,Springfield, Mo., and is subject to return on request of this company.The information shown is confidential and the recipient by accepting this drawing agrees not to use any information contained thereon in any manner which will be detrimental to the PAUL MUELLER CO.

MUELLER
P. O. BOX 828 / SPRINGFIELD, MISSOURI 65801-0828, U.S.A.

DRAWING NO.
1207121-01-02-01

REVISIONS

REV	DESCRIPTION	BY	DATE	REVIEW	DATE
C	ITEM 14 CHG MATL TYPE FROM SA240* ITEM 38 CHG FROM 9401996* ADD ITEM 53* CHG PLATE PACK LENGTH FROM 48.00/46.40	DAB	10/15/2012	CRK	10/15/2012
B	CHG ITEM 39 WAS 184, ITEM 40 WAS 182 AND ITEM 41 WAS 2	DAB	9/21/2012	CRK	9/21/2012
A	RELEASED FOR PRODUCTION	DAB	9/5/2012	CRK	9/5/2012

ORIGINAL DOCUMENT SIZE D