DRAWING NUMBER 2200-2-47

PLAN HOLD CORPORATION • IRVINE, CALIFORNIA

First Angle Projection Do Not Scale

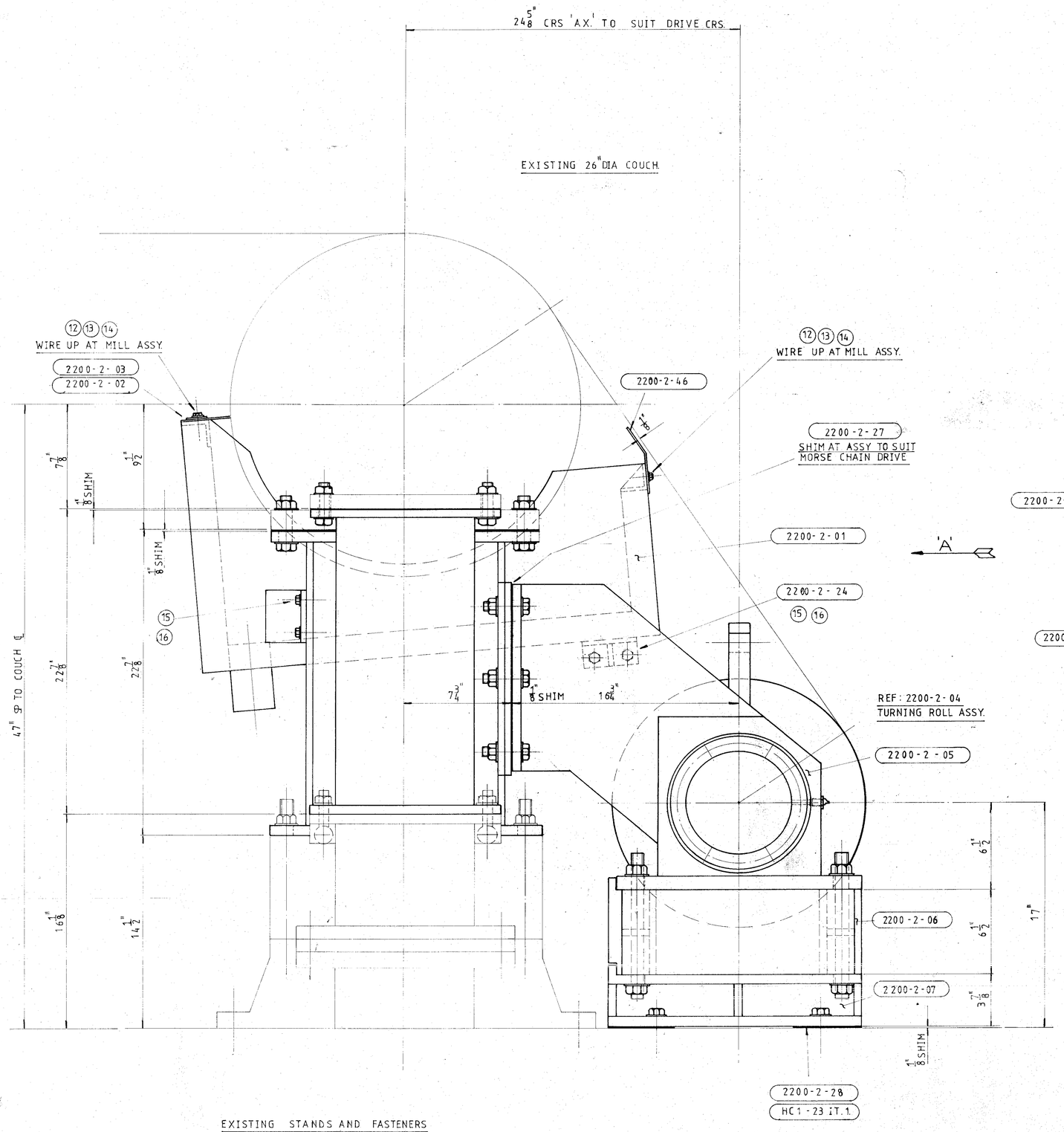

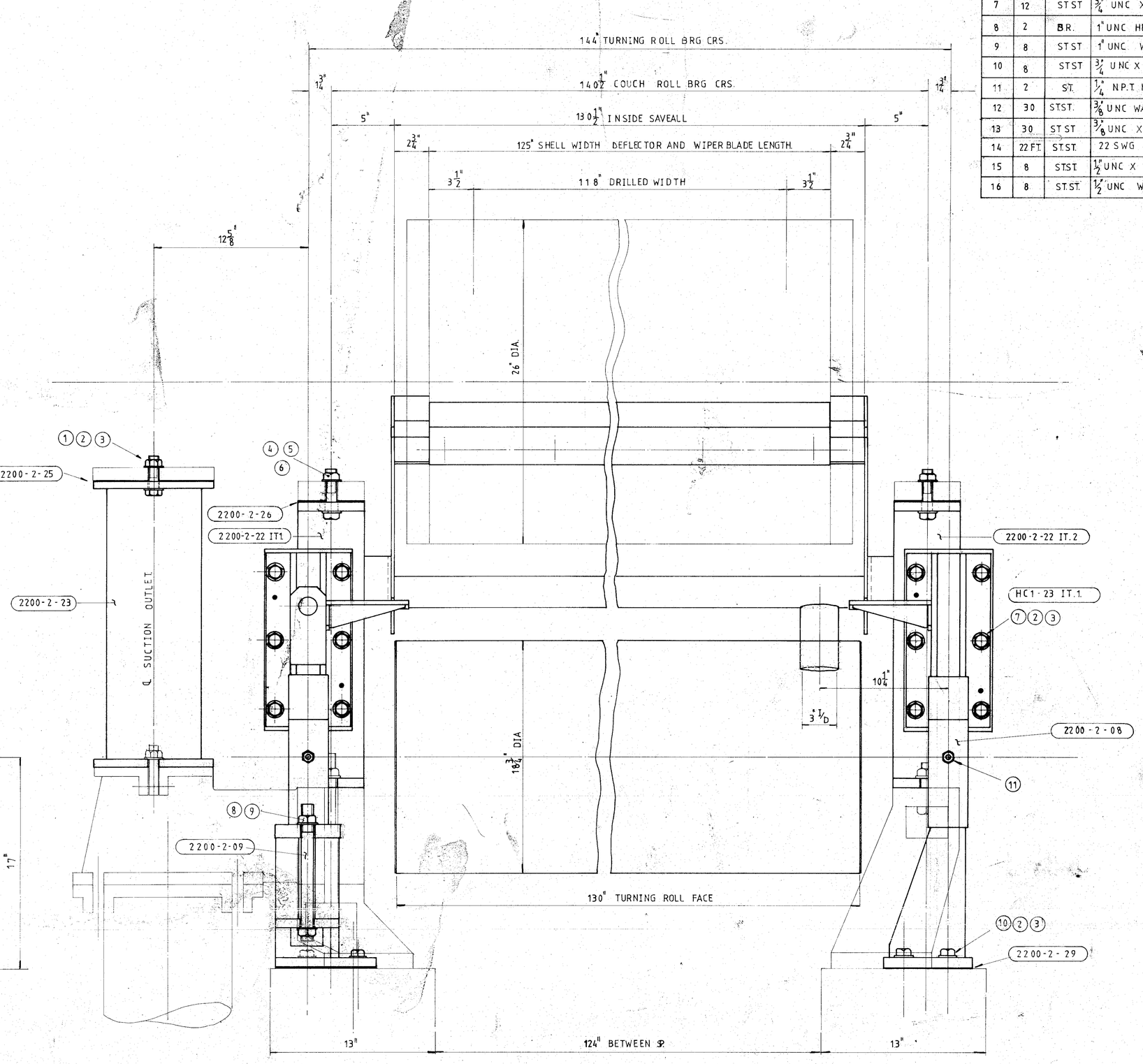

ITEM	QTY	MATL.	DESCRIPTION
1	2	ST.S.T.	3/4" UNC X 2 1/2" LG HEX HD SCREW
2	22	ST.ST	3/4" UNC WASHERS
3	22	ST.S.T.	3/4" UNC HEX NUTS
4	4	ST.S.T.	7/8" UNC X 3 1/2" HEX HD SCREW
5	4	ST.ST	7/8" UNC WASHERS
6	4	ST.ST	7/8" UNC HEX NUTS
7	12	ST.ST	3/4" UNC X 3" LG HEX HD SCREW.
8	2	BR.	1" UNC HEX NUTS
9	8	ST.ST	1" UNC WASHERS
10	8	ST.ST	3/4" UNC X 1 3/4" LG HEX HD SCREW.
11	2	ST.	1/4" N.P.T. HEX LUBRICATOR.
12	30	ST.ST.	3/8" UNC WASHER
13	30	ST.ST	3/8" UNC X 1/2" LG HEX HD SCREW.
14	22 FT	ST.ST.	22 SWG WIRE
15	8	ST.ST	1/2" UNC X 3/4" LG HEX HD SCREW
16	8	ST.ST.	1/2" UNC WASHER

EXISTING STANDS AND FASTENERS SHOWN THUS :-

NEW MATL :-

FRONT VIEW IN DIRECTION ARROW 'A' REAR

LPT# 44M0118-1

μ ins.	μ m	
250	6,3	ROUGH MACHINE
125	3,2	FINE MACHINE
63	1,6	SMOOTH MACHINE
32	0,8	LINNISH
16	0,4	POLISH
8	0,2	
4	0,1	
2	0,05	

MACHINING SHOWN THUS ✓
SURFACE FINISH TO C.L.A. INDEX No. BSS 1134

GENERAL MACHINING TOLERANCES:
UP TO 200 mm ± 0.13 mm
8 ins ± 0.005 ins
OVER 200 mm ± 0.25 mm
8 ins ± 0.01 ins

ISSUE	REVISION	INITIAL	DATE
5			
4			
3			
2			

Title ARRGT COUCH & TURNING ROLL Matl.

Scale 3" = 1' Issue 1 Drawn PWP Date NOV.78 Checked PWP Order Title LINCOLN #4

Drg. No. 2200-2-47

Holder Consultants Ltd.