Dräger

# Caleo®

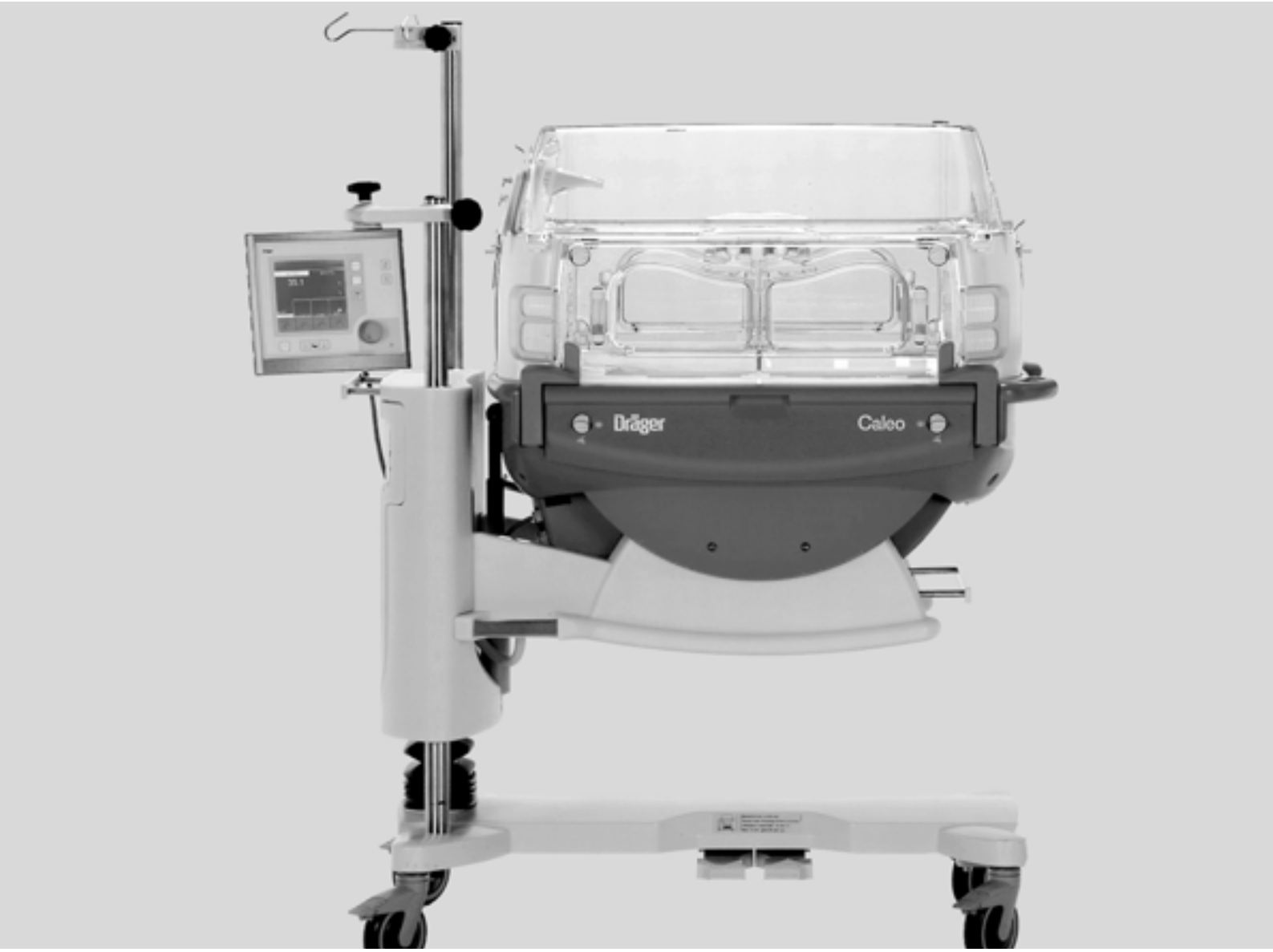


**WARNING**
**To properly use this medical device, read and comply with these Instructions for Use.**

## Neonatal incubator
## Software 2.n
## Instructions for Use

## How to use the Instructions for Use

**The headline...**
**specifies the subject of the main chapter.**
for fast orientation and navigation.

**The page...**
**contains instructions for use of the unit**
combine text and illustrations. The information is translated directly into practical actions showing the user how to use the unit.

**The left-hand column...**
**contains text**
The text provides explanations and instructs the user step-by-step in the practical use of the product, with short, clear instructions in easy-to-follow sequence.

- Dots refer to actions.

**1** Numbers refer to the illustrations next to the text and to the sequence of actions in the case of operations consisting of several steps.

**The right-hand column...**
**contains illustrations**
The illustration shows the relationship to the text and the orientation to the device. The elements mentioned in the text are highlighted, and unnecessarydetails are omitted. The user is guided by screens confirming the various steps required for each action.

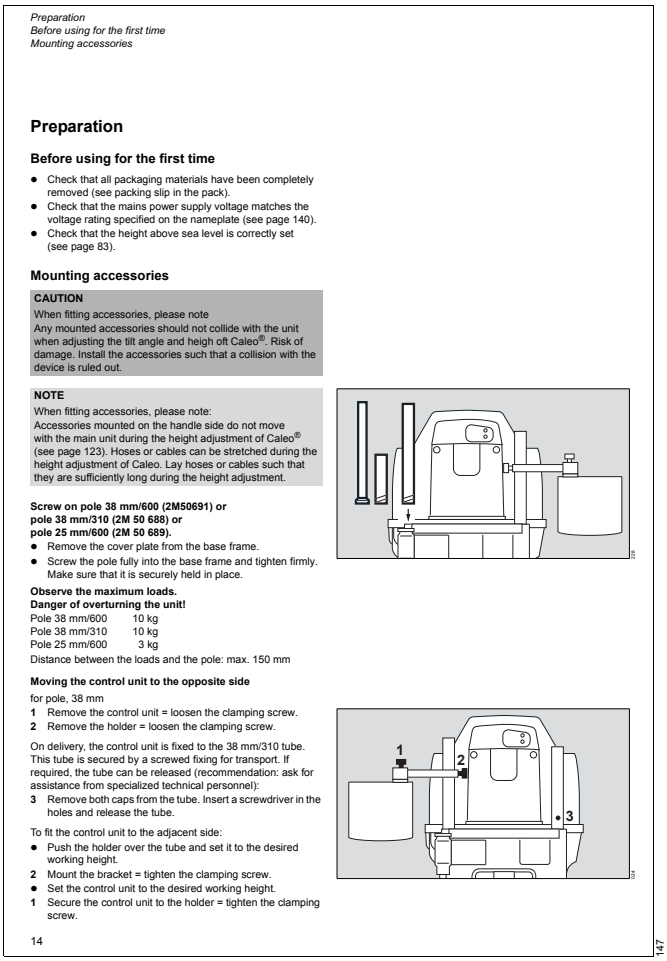

*Preparation*
*Before using for the first time*
*Mounting accessories*

**Preparation**

**Before using for the first time**

- Check that all packaging materials have been completely removed (see packing slip in the pack).
- Check that the mains power supply voltage matches the voltage rating specified on the nameplate (see page 140).
- Check that the height above sea level is correctly set (see page 83).

**Mounting accessories**

**CAUTION**
When fitting accessories, please note
Any mounted accessories should not collide with the unit when adjusting the tilt angle and heigh oft Caleo®. Risk of damage. Install the accessories such that a collision with the device is ruled out.

**NOTE**
When fitting accessories, please note:
Accessories mounted on the handle side do not move with the main unit during the height adjustment of Caleo® (see page 123). Hoses or cables can be stretched during the height adjustment of Caleo. Lay hoses or cables such that they are sufficiently long during the height adjustment.

**Screw on pole 38 mm/600 (2M50691) or pole 38 mm/310 (2M 50 688) or pole 25 mm/600 (2M 50 689).**

- Remove the cover plate from the base frame.
- Screw the pole fully into the base frame and tighten firmly. Make sure that it is securely held in place.

**Observe the maximum loads.**
**Danger of overturning the unit!**

| | |
|---|---|
| Pole 38 mm/600 | 10 kg |
| Pole 38 mm/310 | 10 kg |
| Pole 25 mm/600 | 3 kg |

Distance between the loads and the pole: max. 150 mm

**Moving the control unit to the opposite side**

for pole, 38 mm
**1** Remove the control unit = loosen the clamping screw.
**2** Remove the holder = loosen the clamping screw.

On delivery, the control unit is fixed to the 38 mm/310 tube. This tube is secured by a screwed fixing for transport. If required, the tube can be released (recommendation: ask for assistance from specialized technical personnel):
**3** Remove both caps from the tube. Insert a screwdriver in the holes and release the tube.

To fit the control unit to the adjacent side:

- Push the holder over the tube and set it to the desired working height.

**2** Mount the bracket = tighten the clamping screw.

- Set the control unit to the desired working height.

**1** Secure the control unit to the holder = tighten the clamping screw.

14



147

## Safety Information Definition

**WARNING**
**A WARNING statement provides important information about a potentially hazardous situation which, if not avoided, could result in death or serious injury.**

**CAUTION**
A CAUTION statement provides important information about a potentially hazardous situation which, if not avoided, may result in minor or moderate injury to the user or patient or in damage to the medical device or other property.

**NOTE**
A NOTE provides additional information intended to avoid inconvenience during operation.

# Table of contents


| | |
|---|---|
| For Your Safety and that of Your Patients | 4 |
| Intended Use | 6 |
| What's what | 8 |
| Preparation | 14 |
| Check readiness for operation | 32 |
| Operation | 40 |
| Cleaning, disinfecting and sterilizing | 94 |
| Maintenance intervals | 106 |
| Disposal | 109 |
| Message – Cause – Remedy | 112 |
| Error – Cause – Remedy | 118 |
| Technical Data | 120 |
| Description | 126 |
| Order List | 143 |
| Parts List | 146 |
| Index | 147 |

## Definition of target groups

Users, maintenance personnel and professionals are defined as the target groups for this medicine device.
These target groups were trained to handle the medical device and have the necessary specialized knowledge and training, the necessary know how to use, install, prepare, maintain or repair the medical device.
Dräger points out that only the defined target groups should use, install, prepare, maintain or repair the medical device.

**User**

Users are persons who may use the medical device in accordance with its intended purpose.

**Maintenance personnel**

Maintenance personnel are persons who are responsible to the owner or operator for the maintenance of the medical device.
Maintenance personnel are persons who install, prepare or maintain the medical device in working condition.

**Professionals**

Professionals are persons who may perform repair jobs or complex maintenance jobs on the medical device.

# For Your Safety and that of Your Patients

### General Safety Information

The following WARNING and CAUTION statements apply to general operation of the medical device.
WARNING and CAUTION statements specific to subsystems or particular features of the medical device appear in the respective sections of these Instructions for Use or in the Instructions for Use of another product being used with this device.

### Strictly follow these Instructions for Use

**WARNING**
**Any use of the medical device requires full understanding and strict observation of all sections of these Instructions for Use. The medical device may be used only for the purpose specified on page 6 under "Intended use" in connection with a suitable patient monitoring system (see page 5). Strictly observe all WARNING and CAUTION statements throughout these Instructions for Use and all statements on medical device labels. Failure to observe these safety information statements constitutes a use of the medical device that is inconsistent with its intended use.**

### Maintenance

**WARNING**
**The medical device must be inspected and serviced regularly by professionals who possess the required qualifications due to their training and their experience. Repair of the medical device must also be performed by trained personnel with additional product-specific DrägerService training.**
**Dräger recommends that a service contract is obtained with DrägerService and that all repairs are performed by DrägerService. Dräger further recommends that only authentic Dräger repair parts are used for maintenance.**
**If the above are not complied with, the correct functioning of the medical device may be compromised.**
**See chapter "Maintenance".**

### Safety checks

The medical device must be subject to regular safety checks.
See chapter "Maintenance".

### Accessories

**WARNING**
**Only the accessories mentioned in the order list have been tested and approved for use with the medical device.**
**Therefore, it is strongly recommended that only these accessories are used in conjunction with the medical device. Otherwise, the correct functioning of the medical device may be compromised.**

### Connected devices

**WARNING**
**Risk of electric shock and of device malfunction**
**Any connected devices or device combinations not complying with the requirements mentioned in these Instructions for Use may compromise the correct functioning of the medical device. Before operating any combination of devices, refer to and strictly comply with the Instructions for Use for all connected devices and device combinations.**

### Not for use in areas of explosion hazard

**WARNING**
**This medical device is neither approved nor certified for use in areas where combustible or explosive gas mixtures are likely to occur.**

### Safe connection with other electrical equipment

**CAUTION**
Risk of patient injury
Electrical connections to equipment not listed in these Instructions for Use or these Assembly Instructions must only be made when approved by each respective manufacturer.

### Connection to other devices

Device combinations approved by Dräger (see Instructions for Use of the individual devices) meet the requirements of the following standards:

– IEC 60601-1 (EN 60601-1st, 2nd Edition)
  Medical electrical equipment
  Part 1: General requirements for safety
– IEC 60601-1-1 (EN 60601-1-1)
  Medical electrical equipment
  Part 1-1: General requirements for safety
  Collateral standard: Safety requirements for medical electrical systems
– IEC 60601-1-2 (EN 60601-1-2)
  Medical electrical equipment
  Part 1-2: General requirements for safety
  Collateral standard: Electromagnetic compatibility; Requirements and tests
– IEC 60601-1-4 (EN 60601-1-4)
  Medical electrical equipment
  Part 1-4: General requirements for safety
  Collateral standard: Programmable electrical medical systems

If Dräger devices are connected to other Dräger devices or third-party devices and the resulting combination is not approved by Dräger, the correct functioning of the devices may be compromised. The owner is responsible for ensuring that the resulting system meets the requirements of the applicable standards.

Strictly observe Assembly Instructions and Instructions for Use for each networked device.

### Patient safety

The design of the medical device, the accompanying documentation, and the labeling on the medical device are based on the assumption that the purchase and the use of the medical device are restricted to professionals, and that certain inherent characteristics of the medical device are known to the user. Instructions and WARNING and CAUTION statements are therefore largely limited to the specifics of the Dräger medical device.

These Instructions for Use do not contain references to various hazards which are obvious to professionals who operate this medical device as well as references to the consequences of medical device misuse, and to potentially adverse effects in patients with different underlying diseases. Medical device modification or misuse can be dangerous.

**CAUTION**

Risk of patient injury.
Do not make therapeutic decisions based solely on individual measured values and monitoring parameters.

### Patient monitoring

The user of the medical device is responsible for choosing suitable monitoring that provides appropriate information about medical device performance and the patient's condition.

Patient safety may be achieved by a wide variety of means ranging from electronic surveillance of medical device performance and patient condition to simple, direct observation of clinical signs.

The responsibility for selecting the best level of patient monitoring lies solely with the user of the medical device.

### Functional safety

The essential performance characteristics consist of a controlled and monitored air-conditioning of the incubator interior with user-defined settings for the monitoring functions.

– Air temperature
– Relative humidity
– $O_2$ enrichment (optional)

or, if a set limit is exceeded, an appropriate alarm. The medical device is equipped with basic safety features to reduce the possibility of patient injury while the cause of an alarm is remedied.

### Information on Electromagnetic Compatibility

General information on electromagnetic compatibility (EMC) according to international EMC standard IEC 60601-1-2:

Medical electrical equipment is subject to special precautionary measures concerning electromagcompatibility (EMC) and must be installed and put into operation in accordance with the EMC information provided on page 139.

Portable and mobile RF communications equipment can affect medical electrical equipment.

**WARNING**

**Do not connect connectors with an ESD warning symbol and do not touch the pins of such connectors without implementing ESD protective measures. Such protective measures may include antistatic clothing and shoes, touching a ground stud before and during connection of the pins, or using electrically insulating and antistatic gloves. All relevant personnel must be instructed in these ESD protective measures.**

**WARNING**

**Do not use skin temperature control on children who are in a state of shock, or have fever! Skin temperature is considerably higher than usual. The control function would overcool the incubator, resulting in the risk of hypothermia.**

**WARNING**

**Only use the integrated scale to determine the weight of the patient.**
**Failure to follow the Operating Instructions can lead to severe inaccuracies in measuring the patient's weight. To safeguard critical therapeutic decisions based on the patient's weight, the weighing result should be checked against a reference measurement on an external scale.**

# Intended Use

Therapy system for premature babies and sick neonates up to a body weight of 5 kg or a body length of 55 cm, for the controlled supply of warmth, humidity* and $O_2$ enrichment* in the patient capsule.
For the therapy of twins, the total body weight is limited to 5 kg.

**Locations of use**

Clinical environment in which premature babies or neonates-require controlled climate parameters.

The device may only be used by properly trained personnel under the supervision of qualified medical personnel familiar with the currently known risks and benefits of using an incubator.

**Therapy and care options**

- Heat therapy through air temperature control or skin temperature control
- Humidification
- $O_2$-Therapy through controlled $O_2$ enrichment
- Normal and intensive care via access ports or a large front flap
- Bed with pivoting adjustment for raising and lowering the head

**With Monitoring for**

- Air temperature
- Skin temperature
- Relative humidity
- $O_2$ concentration
- weight*

* optional equipment feature

# What's what

**What's what** . . . . . 8

Front view . . . . . 8
Side view, connections . . . . . 8
Top view, bed . . . . . 9
Connections on the back of the Control Unit . . . . . 9

**Operating concept** . . . . . 10

Control panel . . . . . 10
Screen . . . . . 11

# What's what

## Front view

**1** Canopy (2M 51 108)
**2** Access ports
**3** Front flap
**4** Handle for transport
**5** Housing
**6** Drawer (2M 50 565)*
**7** Pedals for height adjustment*
**8** Height adjustable pillar*/Housing support
**9** Connection for water heater (LuerLock)
**10** X-ray drawer/removable bed
**11** Screen
**12** Control panel
**13** Pillar element
**14** Double wall* (2M 51 150)

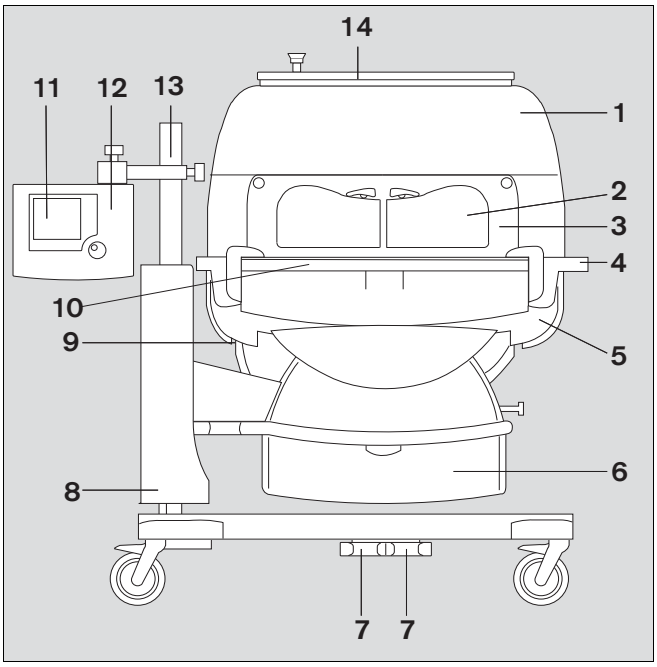

111

## Side view, connections

**15** Central alarm indicator
**16** Sensor unit, temperature connections
**17** Mains power connection
**18** On/off switch
**19** Fresh air filter flap
**20** Connection for $O_2$ control*
**21** Water container (2M 50 040)*
**22** Tubing grommet (2M 50 385)
**23** Side flap
**24** Tubing grommet (2M 50 412)
**25** Feeding grommet plug (2M 51 109)
**26** Trolley castor with direction lock
**27** Trolley castors with brakes

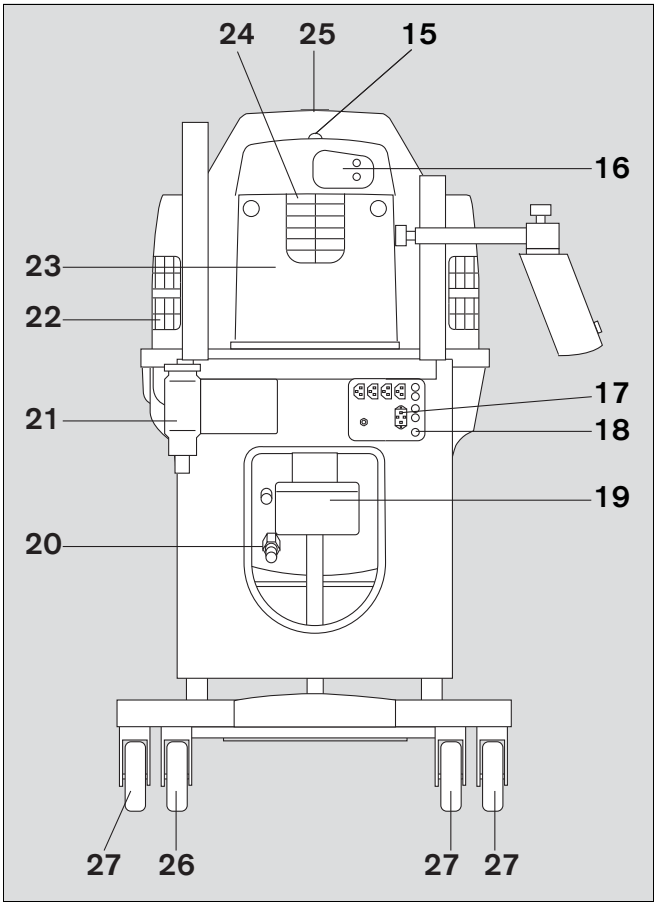

112

* optional equipment feature

## Top view, bed

**1** Spirit levels
**2** Hot air duct

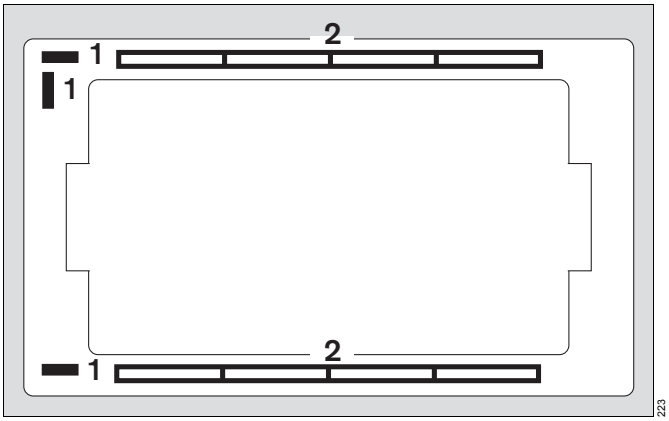


## Connections* on the back of the Control Unit

**3** Nurse call
**4** MEDIBUS*
**5** Service RSB (Remote Service Box)

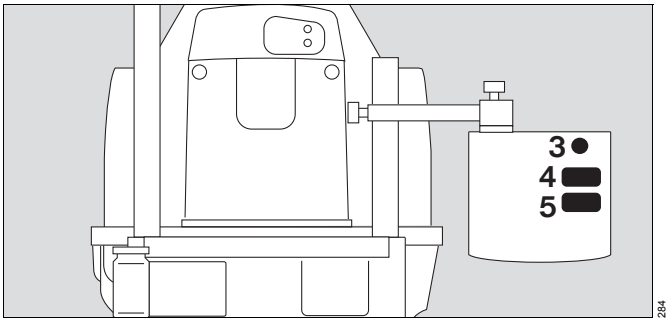


* optional equipment feature

# Operating concept

## Control panel

### Hard Keys

these permanently defined keys enable the user to select various functions of Caleo®:

**1** Scale*
**2** Bed tilt
**3** Menu selection/configuration
**4** Changeover key: air/skin temperature control
**5** Trend display
**6** Suppress alarm tone
**7** Lock key pad function
**8** Rotary knob

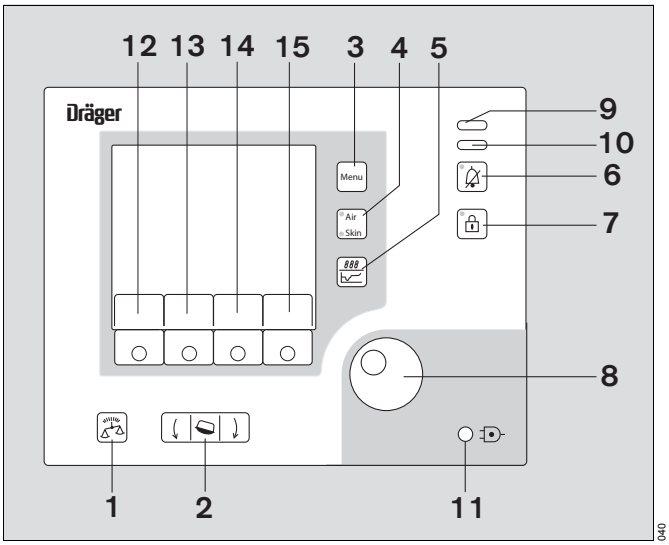


### Visual signals indicate alarm situations

**9** Red bar LED**
**10** Yellow bar LED***
**11** Power failure alarm

### Soft Keys

These keys, with variable functions defined by different labels on the screen, guide the user through the specific routines of the unit, from preparing for use to shutting down the unit.

Depending on the current menu, different soft keys with varying functions and labels are activated. Only the soft keys required for the current menu actually appear. This precaution keeps the display clear, preventing any confusion for the user.

When a soft key is pressed, its function is activated and the relevant menu is displayed on the screen.

In the standard screen, the soft key labels are as follows:

**12** Air/skin temperature
**13** Humidity*
**14** $O_2$*
**15** Day and Night

* Optional equipment feature
** Warning – immediate action is required
*** Caution – rapid action is required

**Rotary knob**

A single rotary knob is used to select and set parameters.

- Turn knob = select
- Press knob = confirm

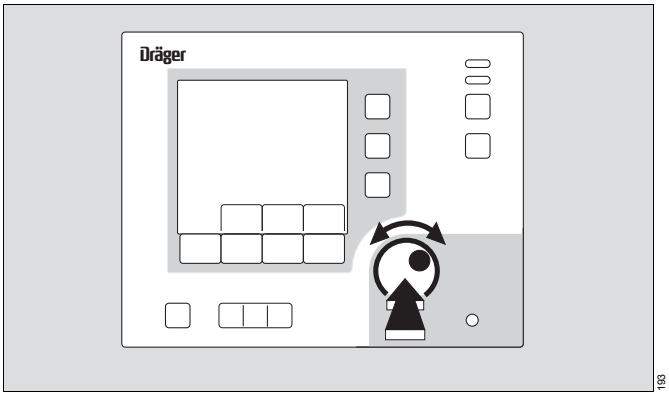


## Screen

By default, the measured values are displayed as numeric values (standard screen).

– Set values and actual measured values for air temperature/skin temperature
– Set values and actual measured values for relative humidity*
– Set values and actual measured values for $O_2$ concentration*
– Day and Night (to adjust the brightness of the screen)
– Alarms and warnings

The screen display can also include a trend graph.

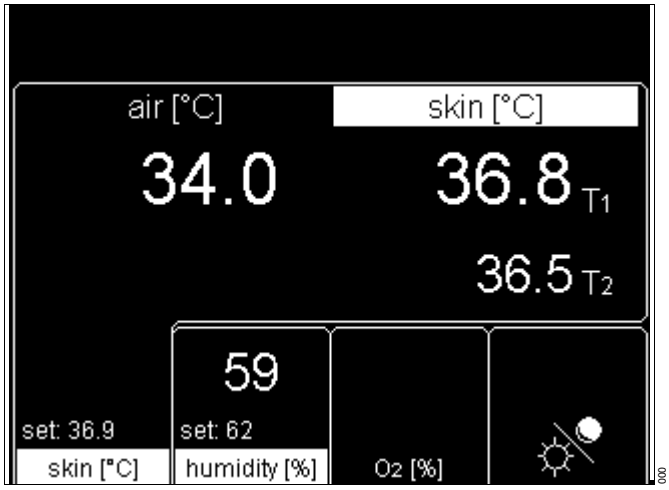


* optional equipment feature

# Preparation

**Preparation** . . . . . 14

Before using for the first time . . . . . 14
Mounting accessories . . . . . 14
Doors, ports and bed . . . . . 20

**Check readiness for operation** . . . . . 32

Before First-time Use . . . . . 32
Before Every Use . . . . . 32

# Preparation

## Before using for the first time

- Check that all packaging materials have been completely removed (see packing slip in the pack).
- Check that the mains power supply voltage matches the voltage rating specified on the nameplate (see page 140).
- Check that the height above sea level is correctly set (see page 83).

## Mounting accessories

**CAUTION**
When fitting accessories, please note
Any mounted accessories should not collide with the unit when adjusting the tilt angle and heigh oft Caleo®. Risk of damage. Install the accessories such that a collision with the device is ruled out.

**NOTE**
When fitting accessories, please note:
Accessories mounted on the handle side do not move with the main unit during the height adjustment of Caleo® (see page 123). Hoses or cables can be stretched during the height adjustment of Caleo. Lay hoses or cables such that they are sufficiently long during the height adjustment.

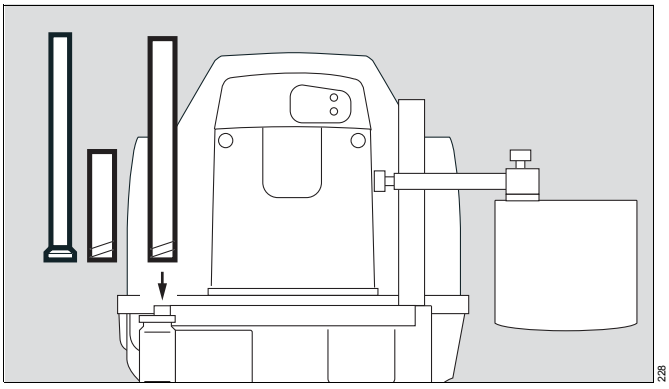


**Screw on pole 38 mm/600 (2M50691) or**
**pole 38 mm/310 (2M 50 688) or**
**pole 25 mm/600 (2M 50 689).**

- Remove the cover plate from the base frame.
- Screw the pole fully into the base frame and tighten firmly. Make sure that it is securely held in place.

**Observe the maximum loads.**
**Danger of overturning the unit!**

| | |
|---|---|
| Pole 38 mm/600 | 10 kg |
| Pole 38 mm/310 | 10 kg |
| Pole 25 mm/600 | 3 kg |

Distance between the loads and the pole: max. 150 mm.

**Moving the control unit to the opposite side**

for pole, 38 mm

**1** Remove the control unit = loosen the clamping screw.
**2** Remove the holder = loosen the clamping screw.

On delivery, the control unit is fixed to the 38 mm/310 tube. This tube is secured by a screwed fixing for transport. If required, the tube can be released (recommendation: ask for assistance from specialized technical personnel):

**3** Remove both caps from the tube. Insert a screwdriver in the holes and release the tube.

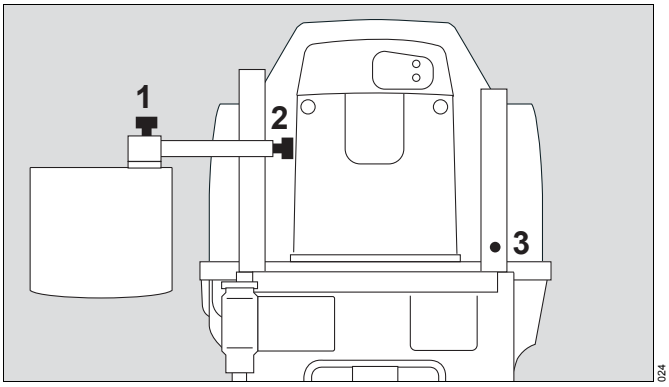


To fit the control unit to the adjacent side:

- Push the holder over the tube and set it to the desired working height.

**2** Mount the bracket = tighten the clamping screw.

- Set the control unit to the desired working height.

**1** Secure the control unit to the holder = tighten the clamping screw.

**NOTE**
Contol unit without space for free swivel movement.
Risk of damage to control unit.
Make sure there is sufficient space to swivel the unit.

**WARNING**
**Mounting the control unit on the handle side.**
**Only specialized technical personnel may move the control unit from the wall side to the handle side or vice versa.**
**Else there is danger of wrong installation and therefore, risk of injury to the user.**

- To install the basic pole (2M 50 680), see page 16.
- Screw in the extension pole 38/600 (2M 50 691) or pole 38/310 (2M 50 688).
- Refit the control unit as specified in the Assembly Instructions.

**CAUTION**
The cable to the control unit must not be removed from the cable guides on the basic pole. Risk of damage.
Without sufficient swivelling space, the cable may get damaged.
Make sure there is sufficient space to swivel and tilt the unit.

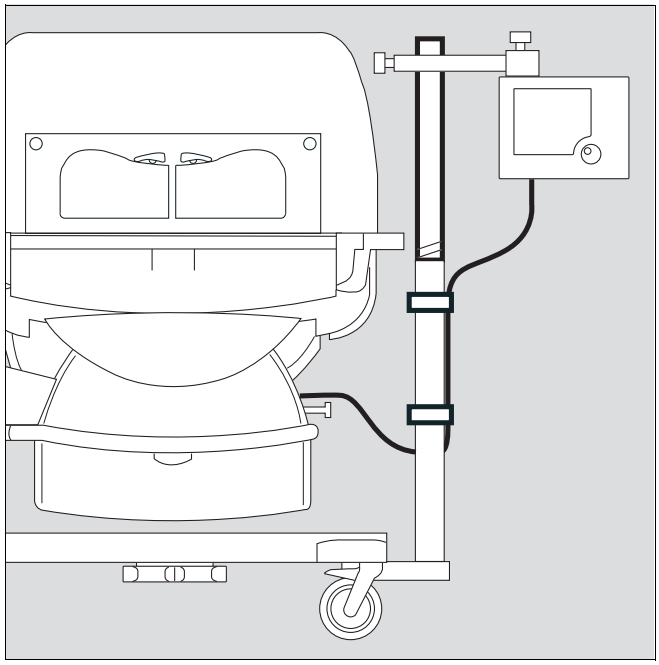


**Infusion support (2M 21 514)**

for pole, 38 mm
Max. load per hook 3 kg

- Push the fixing claw onto the stand pillar.
- Push the infusion holder into the fixing and secure it firmly with the clamping screw.

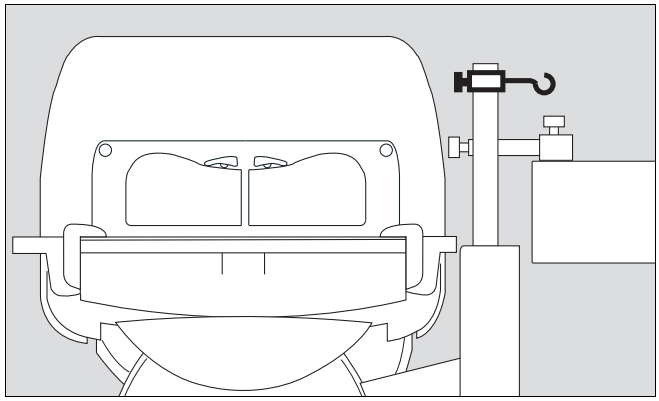


**Swivel table (2M 21 186)**

for pole, 38 mm
For small parts, max. load 3 kg

- Place the clamp of the swivel table on the stand pillar and tighten the clamping screw.

**CAUTION**
Without sufficient swivelling space, the cable may get damaged.
Make sure there is sufficient space to swivel and tilt the unit.

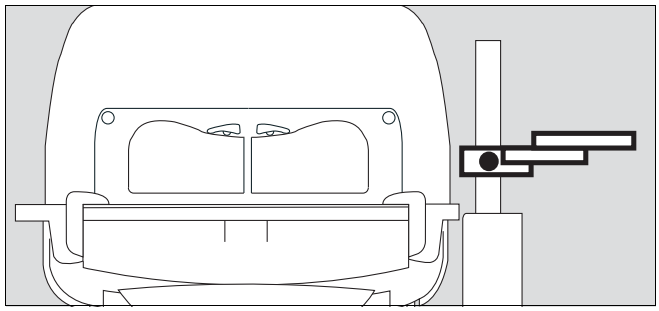

**Compact rail (2M 85 337)**

for pole, 38 mm
Max. load 5 kg.

**WARNING**
**Only specialized technical personnel should perform the installation, else there is risk of incorrect installation and therefore, risk of injury to the user.**

For fixing accessories, e.g.
– $O_2$ monitor

- Adjust the height of the compact rail to the required height of the mounted accessory.

**1** Fit the compact rail to the pole = push the compact rail over the pole and
**2** fasten with the screws.

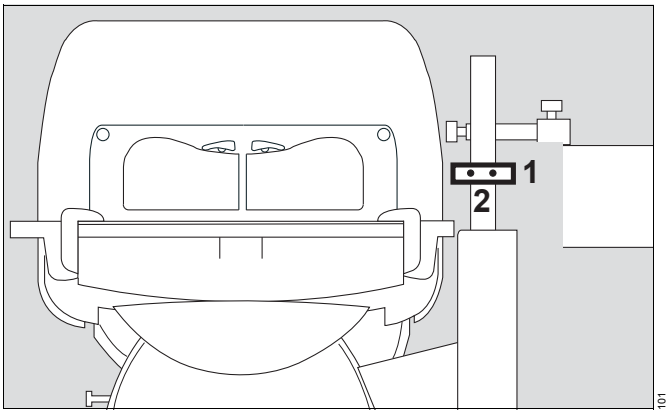


**Bronchial aspiration system (2M 85 125)**

Follow the separate Instructions for Use of the bronchial aspirator.

- Fix the bronchial aspirator holder to the standard rail on the wall side or handle side.
- Tighten the clamping lever.
- Establish the hose connections.

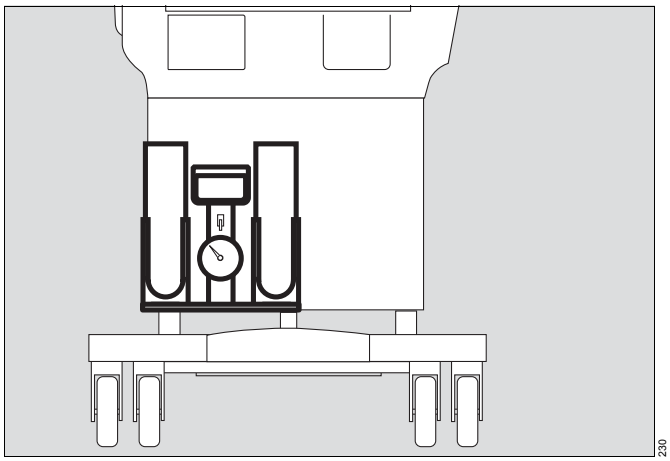


**Basic pole (2M 50 680)**

Maximum load 10 kg

**WARNING**
**Only specialized technical personnel should perform the installation, else there is risk of incorrect installation and therefore, risk of injury to the user.**

- Mount as specified in the Assembly Instructions.

For fixing accessories, e.g.
– For additional pole extensions, see page 17.
– Swivel table (2M 21 186), see page 15.
– Monitor support plate (2M 50 085), see page 18.

Distance between the loads and the pole: max. 150 mm

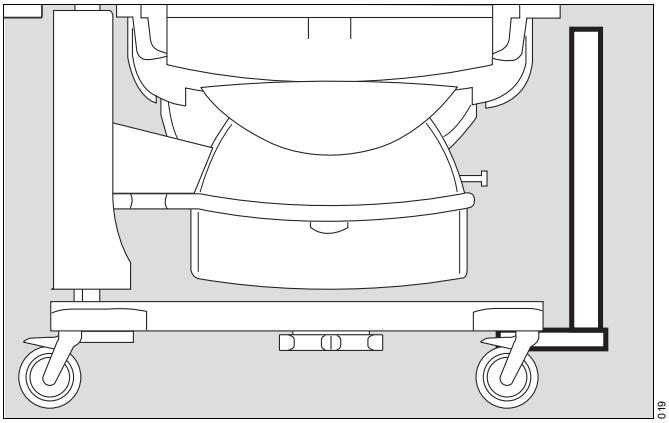

**Shelf 3020 (M 24 678)**

Maximum load must not exceed 2 kg!

- Hang the shelf from the standard rail on the wall or handle side and secure in position.

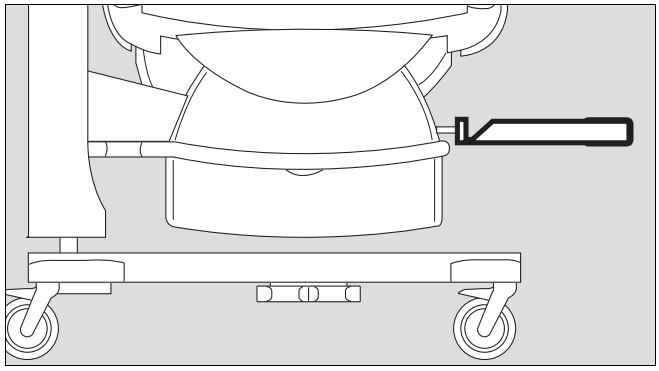


**Pole extensions**

The following poles can be fixed to the base pole as extensions:

– Pole 38 mm/600 (2M 50 691) or
– Pole 38 mm/310 (2M 50 688) or
– Pole 25 mm/600 (2M 50 689).

- Screw the pole into the base pole as far as it will go and tighten securely. Make sure that it is securely held in place.

Observe the maximum loads:

| | |
|---|---|
| Pole 38 mm/600 | 5 kg |
| Pole 38 mm/310 | 5 kg |
| Pole 25 mm/600 | 3 kg |

Distance between the loads and the pole: max. 150 mm

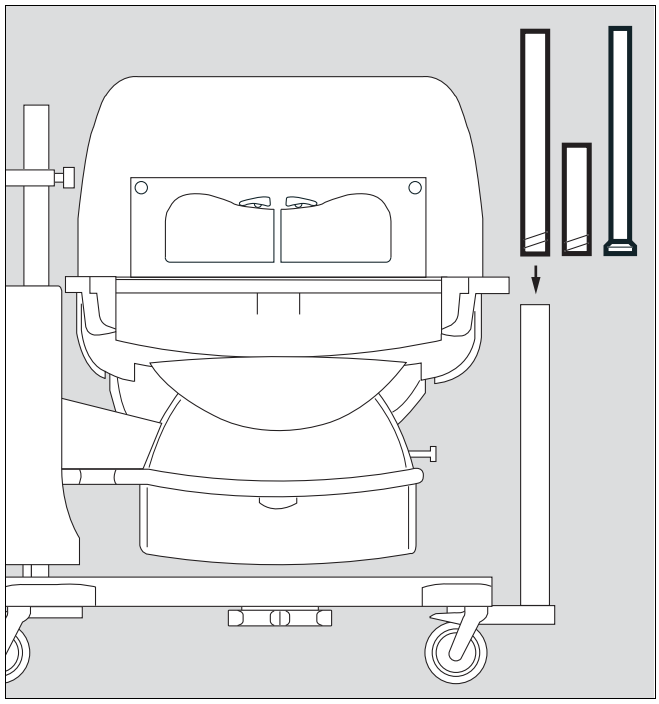

**Monitor shelf (2M 50 085)**

The monitor shelf can be mounted on the wall side and/or the handle side.
Maximum load must not exceed 20 kg!
Shelf for monitor and ventilation equipment.

**WARNING**
**Only professionals should perform the installation, else there is risk of incorrect installation and therefore, risk of injury to the user.**

To mount the monitor support plate,
– on the wall side, use a second pole 38 mm (see page 14),
– on the handle side, use a second base pole (see page 16) with a pole extension 38 mm (see page 16).

- Mount as specified in the Installation Instructions.
- Fit the monitor shelf = slide the shelf over both 38 mm poles and

**1** fix in place with the screws.

**CAUTION**
The vertical stability can be affected if the shelf is placed too high. Threat to patient or user.
To obtain safe veritical stability, observe maximum installation height.

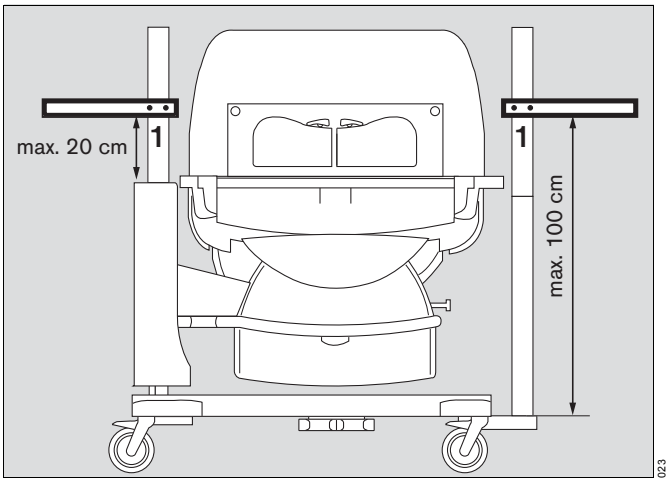


**Hose holder for ventilation hoses (84 11 075)**

- Open the front flap.
- Raise the bed and pull it out of the incubator.
- Push the mattress slightly to one side.
- Place the hose holder in the mounting hole in the bed and fasten from underneath with the locking screw.
- Replace the bed in the incubator and close the front flap.

The hose holder can be fixed to any of the four corners of the bed.

**2** Clip the ventilation hoses and cables into the clips at the end of the ventilation hose holder.

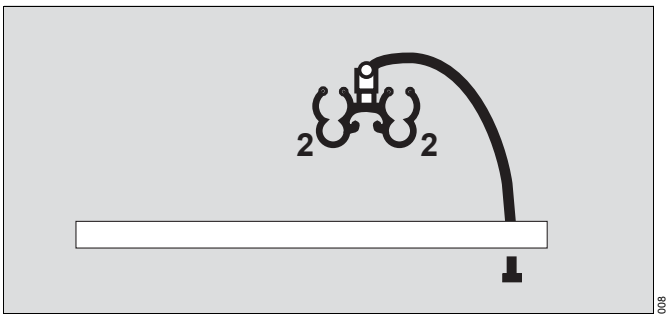

**$O_2$ enrichment with $O_2$ control***

**1** Screw the $O_2$ connection hose to the underside of the incubator.

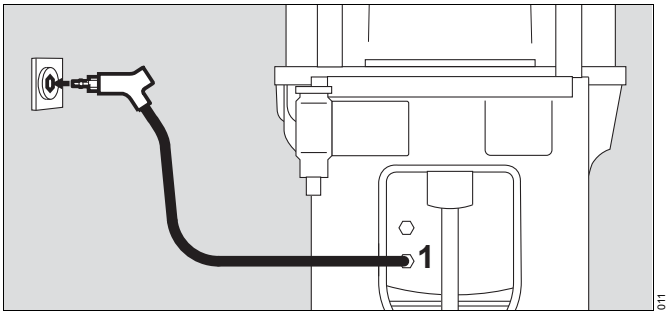


**NOTE**
In case of a loose $O_2$ connection hose a leakage in the compressed gas inlet occurs, supply pressure in the device is too low.
Check the hose for tight connection.

- Insert the probe into the outlet of the central $O_2$ supply pipeline and place it in the "Park" position (see the associated Instructions for Use).
  **The permissible gas pressure is between 300 and 600 kPa.**

**$O_2$ monitor**

Monitoring the $O_2$ concentration with the help of an $O_2$ monitor with alarm limits:

- Fix the $O_2$ monitor to the compact rail using the holder.
- Place the sensor capsule in Caleo®.
- Route the sensor cable through one of the flexible tubing grommets. Where applicable, push the sensor plug into the socket of the $O_2$ monitor (e.g. Oxydig or MiniOx 3000) until it audibly clicks into place (see separate Instructions for Use of $O_2$ monitor).

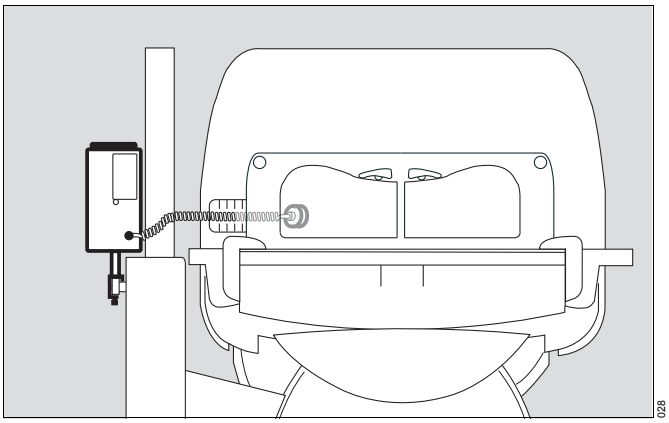


**Vacuum mattress (2M 17 909)**

The contour of the vacuum mattress can be altered as required and is then maintained after air evacuation of the mattress.
Extreme positions can therefore be obtained for special applications. The mattress can remain in the incubator.

- Open the front flap.
- Insert and preform the vacuum mattress.
- Place the patient on the mattress and adjust the mattress to the desired shape.
- Connect the vacuum mattress to the hose of the suction system.

**2** Open the valve and evacuate the vacuum mattress.
**2** Close the valve and disconnect the hose.

- Close the front flap.

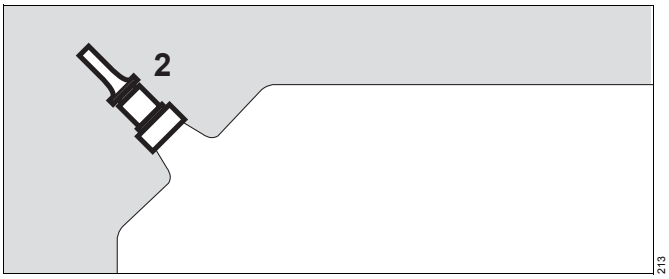


**Fitting the drawer (2M 50 565)**

Maximum load must not exceed 7 kg.

**WARNING**
**Only specialized technical personnel should perform the installation, else there is risk of incorrect installation and therefore, risk of injury to the user.**

- Mount as specified in the Installation Instructions.
- Fit the drawer = slide the drawer box into the groove in the base frame.

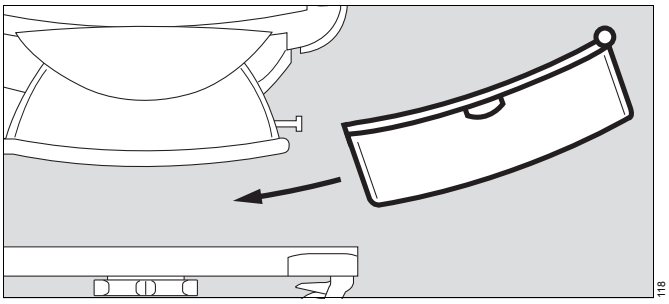


* optional equipment feature

## Doors, ports and bed

### Access ports

To open the access port:

**1** Press down the knurled area of the locking bolt. The access port opens.

To close the access port:

- Press the access port closed until the locking bolt engages.

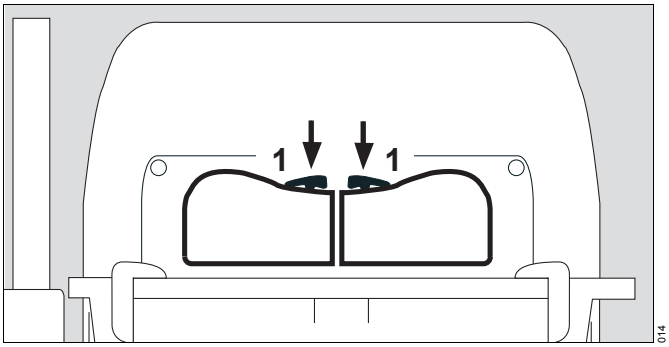


### Front flap

To open the front flap:

**2** Turn the two knobs inwards to the vertical position. The red latch becomes visible.

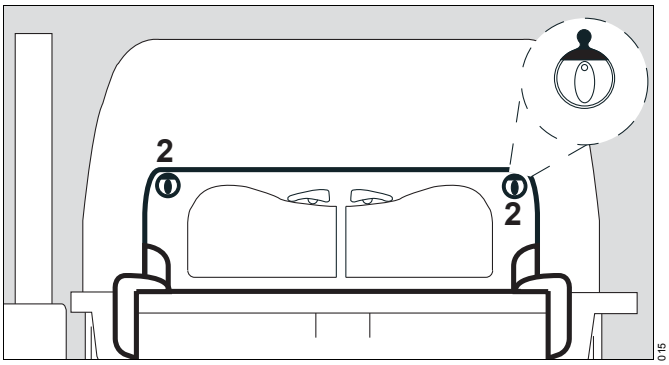


- Lower the front flap until it hangs down vertically towards the floor.

Take care not to trap hoses and cables in the moveable double wall of the front flap!

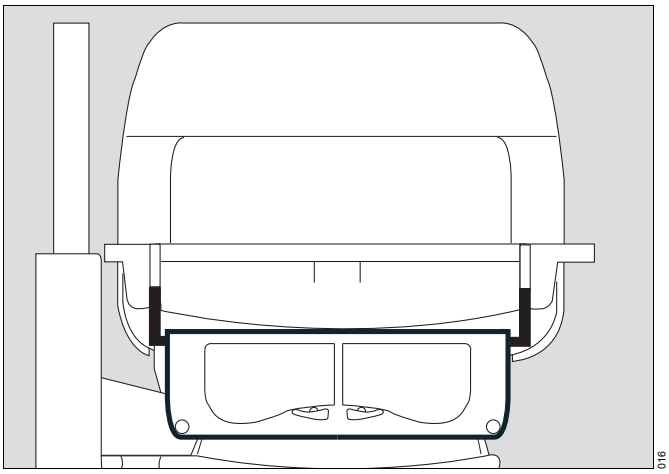


To close the front flap:

- Raise the front flap and press into position,

**3** Turn the two locking knobs outwards to the horizontal position until you feel them click into place.

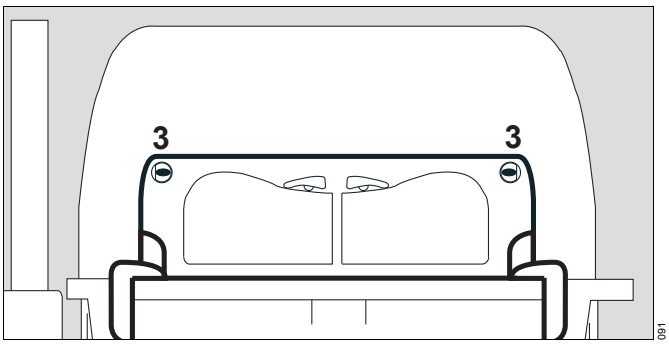


**WARNING**
**Flap can open on its own, danger to patients.**
**Make sure that both locking knobs are engaged. The red latches must no longer be visible.**

**WARNING**
**Danger of excessive cooling or overheating of the patient. If the moveable double wall is not parallel to the front flap, the hot air duct is interrupted.**
**The moveable double wall must be positioned parallel to the front flap. Align the moveable double wall if necessary!**

**Side flap**

- The side flap is opened and closed the same way as the front flap (see page 20).

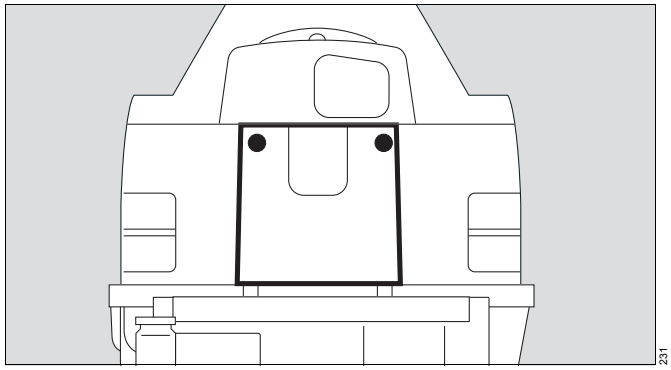


**Double wall***

The double wall (2M 51 150) can only be fastened to the canopy (2M 51 108).

Fitting the double wall

**1** Pull the plunger up as far as it will go.
The red shaft of the plunger will then be visible.

- Place the double wall on the hood.

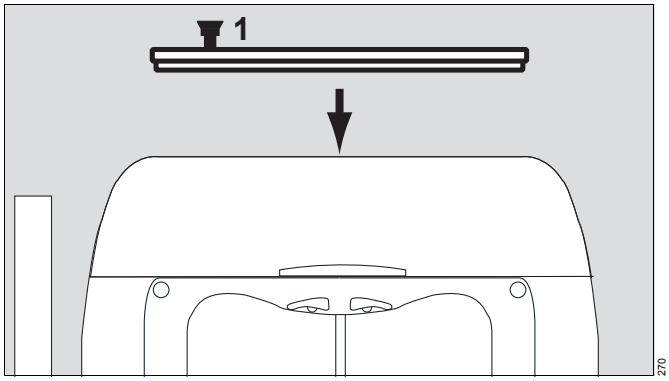


**2** Position the centering lugs in the recesses in the hood.

**3** Place the bore sleeve of the double wall assembly in the hole for the "feeding grommet" plug.

- Lay the contour seal (gasket) of the double wall evenly on the hood.

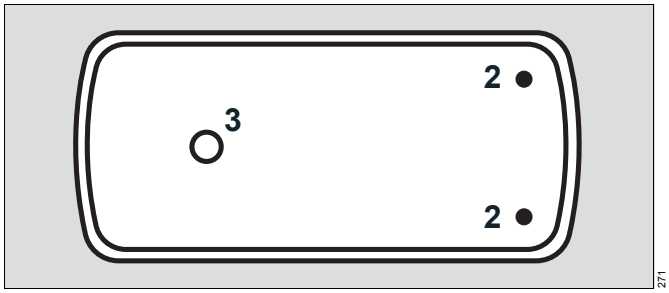


Securing the double wall

**4** Push the plunger down into the sleeve until it engages.
The red shaft of the plunger must no longer be visible.

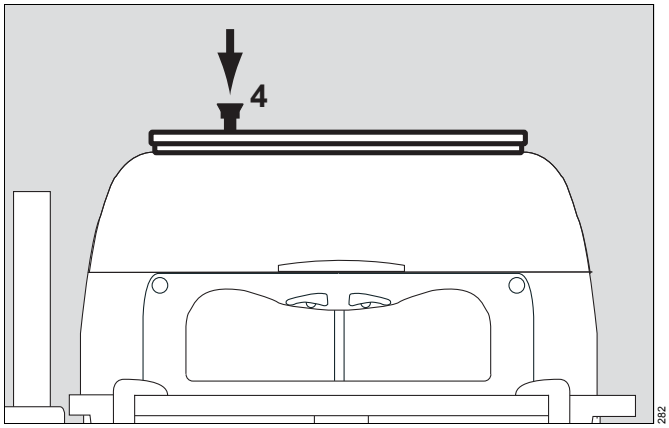


* optional equipment feature

Removing the double wall

**1** Pull the plunger up as far as it will go.
The red shaft of the plunger will then be visible.

**2** Grip the double wall with both hands and lift it off.

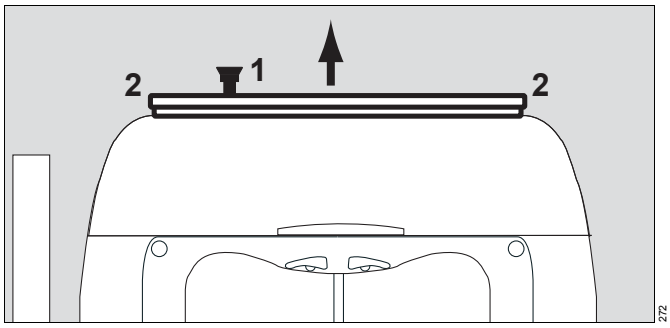


Storing the double wall

- Fix the hanger (2M 51 152) to the compact rail of the Caleo.

**3** Hook the double wall by its plunger to the hanger.

**CAUTION**
If Caleo is lowered too far, the double wall may touch the floor. Risk of damage.
Observe the set height of the Caleo.
Make sure that if the Caleo is lowered the double wall does not touch the floor.

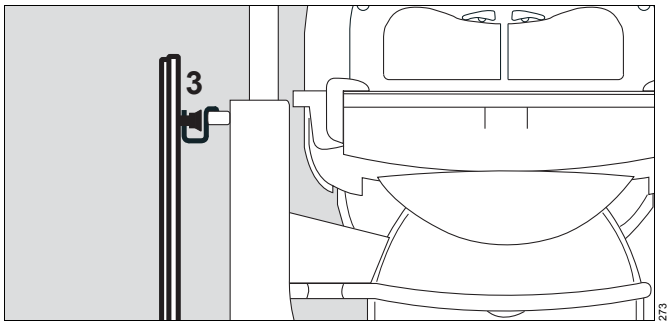


**Canopy**

To open the canopy:

**4** Grasp the handle of the canopy
and

**5** open it (approx. 60°).

**WARNING**
**Danger of overturning the canopy.**
**Do not tilt the canopy over the side. Tip the canopy only longitudinally, as shown.**

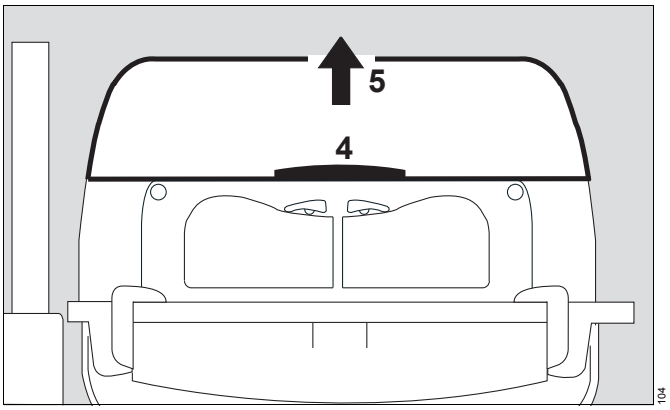


**6** Raise the side canopy prop, and lower the canopy until the prop is fixed in the slot in the canopy.

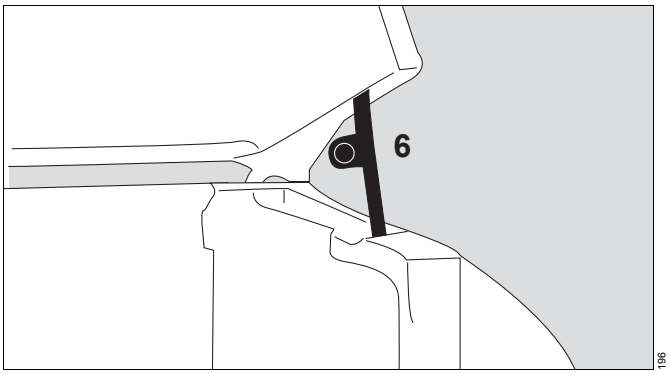


To close the canopy:

**4** Grasp the handle on the canopy and raise it slightly.

**6** Fold down the prop
and

- close the canopy.

The canopy can be opened from both sides.

To remove the canopy:

**1** Hold the canopy with both hands using the handles on the side.

**2** Lift the canopy horizontally off the pillar elements.

To replace the canopy:

**2** Replace the canopy horizontally, so that the guide pins fit into the holes in the pillar element.

**NOTE**
Take care of the sensor unit, risk of damage.

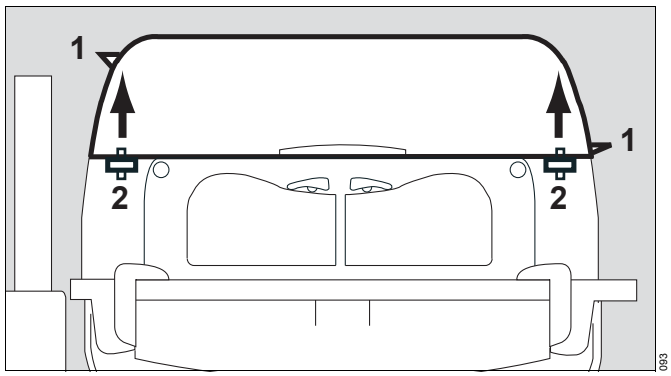


**Removing the bed**

Maximum load must not exceed 5 kg

- Open the front flap and fold it down.

Pull the bed out:

**3** Turn both knobs to the vertical position marked ,

**4** Grasp the bed by the recessed handle or by the knobs and pull it out towards the front as far as it will go.

**WARNING**
**Patient can fall out! Danger to the patient.**
**When the bed is pulled out, the patient must be monitored constantly to prevent the risk of a fall.**

**CAUTION**
The bed can be damaged when leaning on it, maximum load 5 kg.
Do not lean or rest any weight on the bed when it is pulled out.

- After carrying out the care operations, push the bed back until it clicks into place. Turn the knobs to the horizontal position marked , and close the front flap.

**WARNING**
**If the bed is not fully pushed in, danger of interruption of the hot air duct. The result may be excessive cooling or overheating of the patient.**
**Slide the bed in fully.**

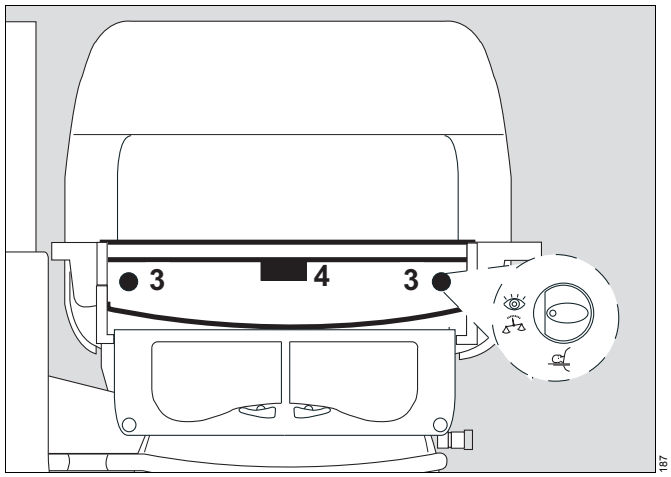

**Using the X-ray drawer**

The X-ray drawer can be pulled out when the front flap is either open or closed.

To open the X-ray drawer:

**1** Turn both knobs to the horizontal position marked ,
**2** pull the drawer out by the recessed handle or the knobs.
- Insert or remove the X-ray cassette. Recesses are provided in the X-ray drawer for positioning.

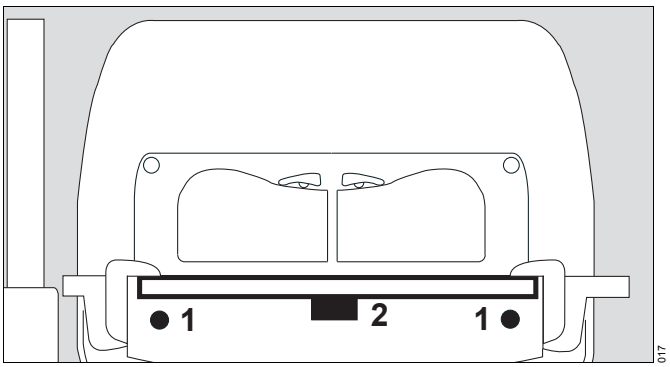


**NOTE**

Do not use the pulled-out X-ray drawer as writing support or bed for the patient. Do not store anything on the drawer!
Risk of injury to patient or damage.
Do not lean on the drawer.

To close the X-ray drawer:

**2** push the drawer inwards under the bed until it tangibly clicks into place.

**WARNING**

**If the X-ray drawer is not fully pushed in, danger of interruption of the hot air duct. The result may be excessive cooling or overheating of the patient.**
**Slide the X-ray drawer in fully.**

**Grommets**

**3** Tubing grommet (2M 50 412)
**4** Tubing grommet (2M 50 412) for high-frequency ventilation*
**5** Hose modules (2M 50 385)
**6** The feeding grommet plug (2M 51 109) can only be used if no double wall is attached to the canopy.

- Route the cables or hoses through the flexible tubing grommets

The hose holder for vetilation hoses is provided to route ventilation hoses and cables through Caleo® (page 18).

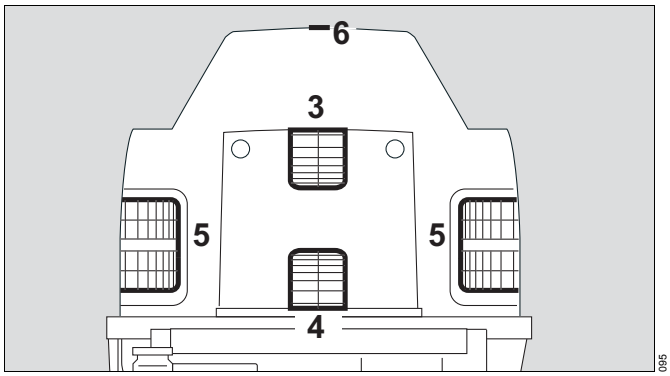


**Hose fixing devices***

The hose fixing devices (2M 51 140) can only be attached to hose modules with pins (2M 51 139). Hose fixing devices act as guides for hoses and cables.

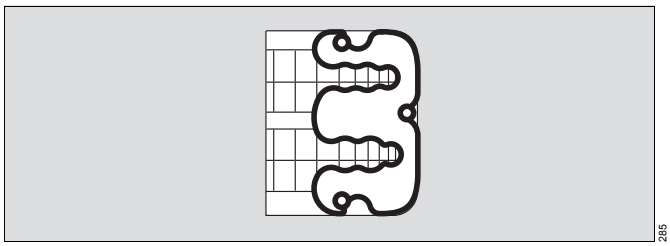


* optional equipment feature

**Drainage module***

The drainage module (2M 51 142) can only be mounted onto the pillar elements (2M 51 154 and 2M 51 156).
The drainage module facilitates the installation of hoses for patient drainage.

- Open the side flap.

**1** Positioning the hoses in the drainage module.

- Close the side flap.

**CAUTION**
Hoses that are not routed correctly and safely without obstruction can kink, tear or become squashed!
Ensure that all hoses are routed correctly and safely without obstruction.

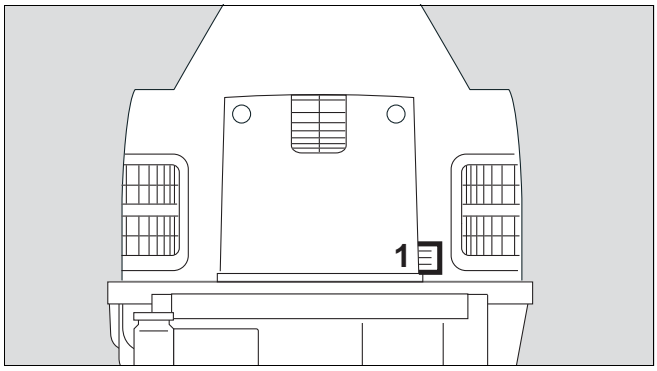


**Drawer (2M 50 565)**

Drawer for storing items required for nursing or treatment.
The drawer is accessible from both sides.

Open the drawer:

**2** grasp the drawer by the handle and pull it out as far as it will go.

- Place the required material in the drawer.

Close the drawer:

**2** push the drawer back in by the handle.

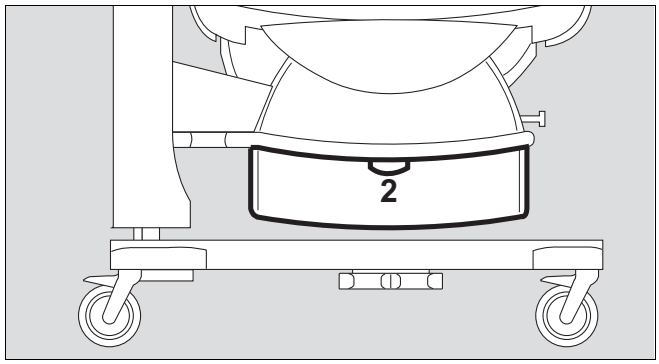


* optional equipment feature

**Trolley with variable height adjustment***

To use the height adjustment facility:

- Switch on Caleo® (see page 44).

**1** Press the left pedal – Caleo® is lowered.

**2** Press the right foot pedal – Caleo® is raised.

- Adjust to a comfortable working height.

When the height stops changing, the trolley is at its end position. Release the pedal.

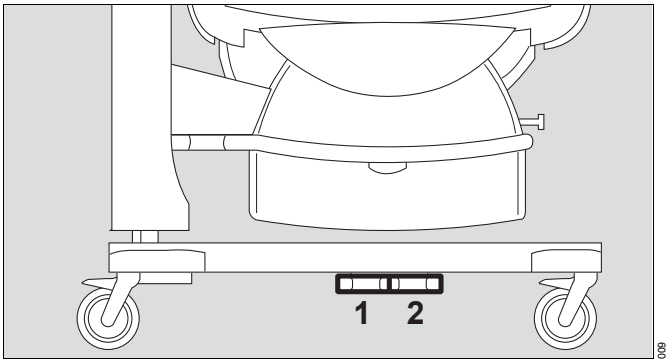


**WARNING**

**Too short hoses or cables can kink, tear or become squashed.**
**Hoses and cables must be long enough not to kink, tear or become squashed!**

**CAUTION**

Objects stored under the drawer can lead to damage.
Do not store anything under the drawer!

**NOTE**

The height adjustment and bed-tilt mechanism cannot be operated at the same time! Function interruption.
Activate only the height adjustment or bed-tilt mechanism.

**NOTE**

Height adjustment is not suitable for steady operation.
Function interruption
The height adjustment can only be operated for max.
6 minutes during one hour.

**Trolley castor with direction lock**

- Activate the lock lever: the castor will be locked in the lengthways direction (longitudinal axis of device).

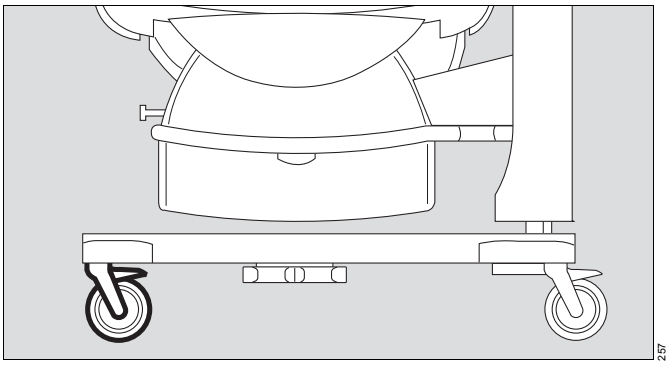


**The castor with direction lock does not have a brake.**
**When parking the unit, apply the brakes of all braked castors.**

**WARNING**

**The castor with direction lock does not have a brake.**
**The device can start moving on its own.**
**When parking the unit, apply the brakes of all braked castors.**

* optional equipment feature

**Bed tilt**

To tilt the bed:

- Switch on Caleo® (see page 44).

**1** Press key = the bed will be lowered on the sensor unit side.
**2** Press key = the bed will be raised on the sensor unit side.

- Adjust the bed to the required tilt angle.

The end position is reached when the tilt angle stops changing. Release the key.

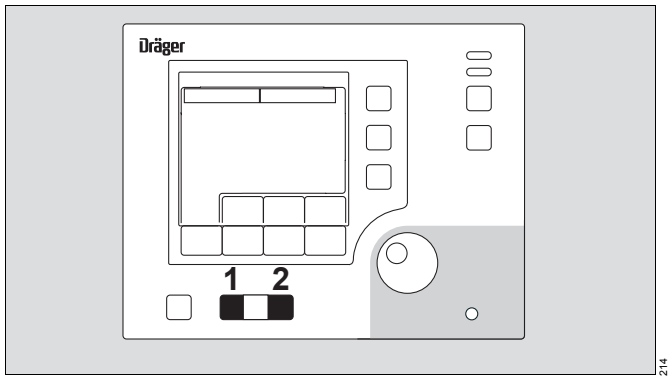


**NOTE**
When the bed-tilt mechanism is actuated, the entire housing of the Caleo® incubator is tilted. Provide protection to patients, if necessary.

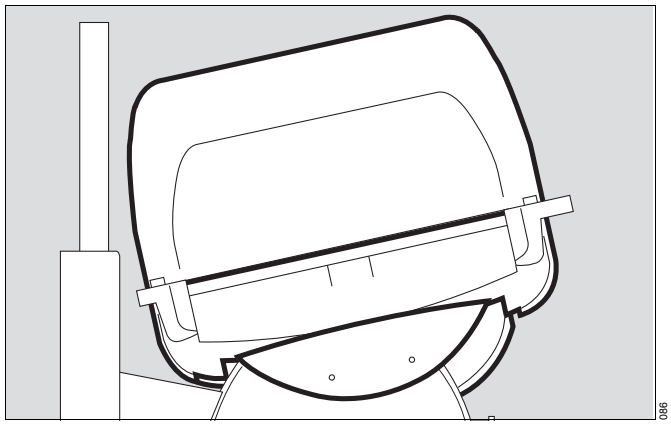


**WARNING**
**Too short hoses or cables can kink, tear or become squashed.**
**Hoses and cables must be long enough and be guided such that they do not kink, tear or become squashed!**

**NOTE**
The height adjustment and bed-tilt mechanism cannot be operated at the same time! Function interruption.
Activate only the height adjustment or bed-tilt mechanism.

**CAUTION**
Possible risk of being crushed, risk of injury.
Do not reach in between the housing and the housing support while the housing is moving.

**Setting the bed to the horizontal position**

- Caleo® must be switched on (see page 44).

**1** Press key = the bed will be raised on the control unit side.
**2** Press key = the bed will be lowered on the control unit side.

The spirit levels show whether the bed is horizontal.

**3** Spirit levels for the horizontal alignment of Caleo® in the transverse axis.
**4** Spirit level for the horizontal alignment of Caleo® in the longitudinal axis. When using the integrated scale (optional, see "Weighing scale" on page 88), make sure that the unit is on a level floor before setting.

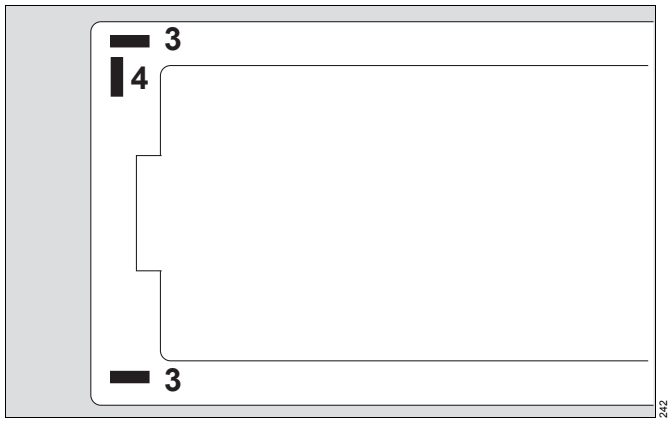

**Using humidifier systems**

**NOTE**
Possible malfunction due to use of non-distilled or non-sterile water.
Only use demineralized water (e.g. Aqua dest.)! Do not use any additives!

**Water tank (2M 50 040):**

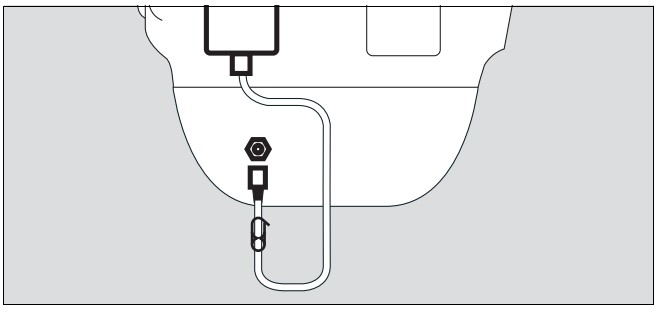

- Disinfect hands.
- Open the water tank = lift up the cap.
- Fill the water tank with demineralized water (Aqua dest.). Always fill the water tank to the full level marking.
  Capacity: **2.8 L**
  **Do not use any additives!**
- Close water tank = push down the cap.
- Prepare a fresh transfer set (MX 17 018).
- Close the clamp on the transfer set.
- Pierce the silicone nozzle of the water tank with the pin of the transfer set.
- Open the clamp on the transfer set.
- Bleed the transfer set (let sterilised water drain off).
- Close the clamp on the transfer set.
- Open the clamp on the transfer set.
- Switch on the humidification module on Caleo® and set the humidity value (page 59).
- Water tank empty = Water shortage alarm is triggered on Caleo®.

**Minimum water quality requirements**

To avoid impairment of function and long-term material damages, please use only water with the following minimum quality for humidication:
– Demineralized water (e.g. Aqua dest.) or
– Demineralized water with a conductivity <20 µS/cm
Do not use any mineral-containing water, e.g. tap water.

**Water heater**

The water heater does not have any components that must be dismantled for the preparation.
Execute the Cleaning Mode after each change of patient.
While preparing the interior of the incubator, ensure that no liquids such as detergents penetrate into the water heater.

**Water bag**

**NOTE**
Use only original sealed bag. Do not use additives or confuse with infusion solutions. Risk of patient injury.
Only use original sealed bags filled with demineralized water (e.g. Aqua dest.). Do not use any additives! Do not confuse with infusion solutions!

- Disinfect hands.
- Prepare a new transfer set (MX 17 018) and a water bag with distilled water (e.g. Aqua dest.).
- Close the clamp on the transfer set.

- Insert the pin of the transfer set into the connector of the water bag.
- Open the clamp on the transfer set.
- Bleed the transfer set (let sterilized water drain off).
- Close the clamp on the transfer set.
- Open the clamp on the transfer set.
- Switch on the humidification module on Caleo® and set the humidity value (page 59).

Replacing the water bag:
Water bag empty = Water shortage alarm is triggered on Caleo®.

- Disinfect hands.
- Close the clamp on the transfer set.
- Replace the water bag and reopen the clamp.

**Integrated socket strip**

The integrated socket strip offers the option of connecting
– Infusion pumps
– Devices for $SpO_2$ measurement.

Connections may only be made by specialized technical personnel.

Caleo does not monitor the power supply to external devices.

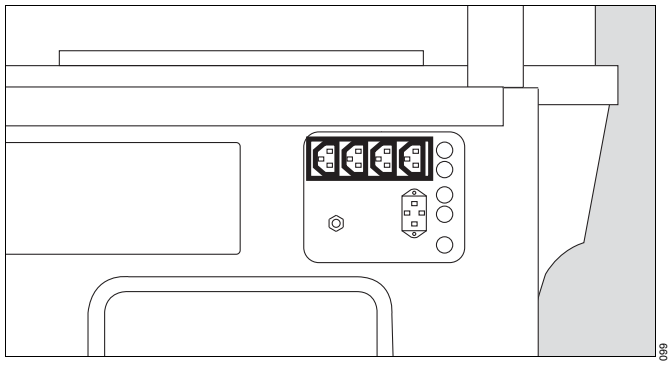


**WARNING**
**The user or patient can be in danger of a electric shock if the power consumption of accessories or the ground leakage current is too high.**
**Do not exceed the maximum power input of the connected accessories (all 4 sockets together: max. 2 A). The maximum permissible ground leakage current must not be exceeded. For the leakage current of Caleo® without socket strip see "Technical Data" on page 120**

**Connecting the nurse call***

The nurse call has a socket on the rear of the control unit for connecting alarm signals to a central hospital alarm system.

- Allow only professionals to install the kit.
  For information on parameters please see Technical Data, page 122.
- The 6-pin round DIN plug (female connector) must be connected to the lead for the central hospital alarm system by a professional.

Connection 3 to 5 will be closed and the nurse call is activated in the event of an alarm with a high risk potential or if there is a serious equipment fault.

* optional equipment feature

**WARNING**
**Do not connect the central hospital alarm system to Caleo if Caleo is not connected to the mains power supply via a mains power cable. Electric power may pose a hazard in all other cases.**
**The central hospital alarm system may only be connected to the nurse call if Caleo is connected to the mains power supply via a mains power cable or if it has been grounded via the grounding bolt on the back of the device.**

**1** Plug the connector into the » ⏚ « socket on the back of the control unit and screw into place.

- Take care to route the connection cable so that it does not get damaged.
- Ensure that the connector cannot be pulled out accidentally.
- Check correct operation of connected nurse call system.

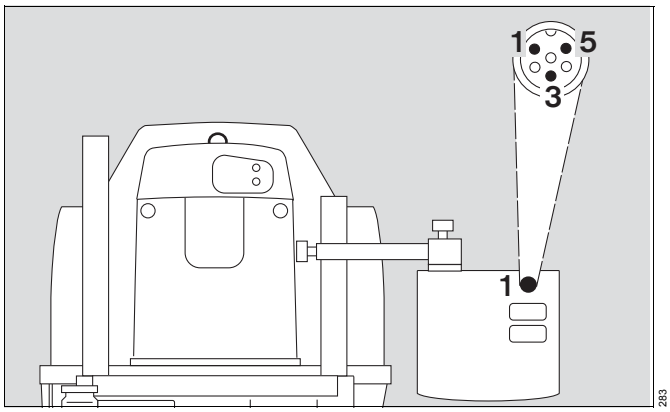


**WARNING**
**Alarm messages with a low risk potential are not forwarded via nurse call. Danger to the patient.**
**Only alarm messages with a high risk potential or serious device faults are transmitted via nurse call.**

– Warning messages* are displayed in the top line of the screen.
– Caution* and advisory messages* are not transmitted.
– A power failure will not be reported by nurse call.
  Use a separate system to monitor the power supply.
– The nurse call is also activated when the internal acoustic generator in the device is defective.

**WARNING**
**Connection of a nurse call does not relieve staff of their duty to check patient data at regular intervals. Otherwise there is potential risk to patient.**
**Screen displays must be checked regularly.**

**WARNING**
**A fault in any of the components in the link between nurse call and central hospital alarm system (e.g. in the electronics for nurse call in Caleo, in the Caleo power supply unit or in the alarm generator of the central hospital alarm system, etc.) may result in failure of the nurse call. Risk potential for patient**
**Check that the connection between nurse call and central hospital alarm system is correct.**

The hospital-side connections to the central hospital alarm system typically use only one channel. The electronics for the nurse call consequently also use only one channel.

* See "Alarm descriptions" on page 138

**MEDIBUS interface***

Serial interface for connecting up to medical devices which comply with IEC/ EN 60601-1, for transmitting the incubator status data (actual values, set values, alarms).
For information on parameters please see Technical Data, page 122.

**WARNING**

**Do not connect external devices to Caleo if Caleo is not connected to the power supply socket via a power cable or if there is no grounding via the grounding bolt on the back of the unit. Electric power may pose a hazard in all other cases.**

**Only connect external devices to the interfaces if Caleo is connected to the power supply socket via the power cable or the device is grounded via the grounding bolt on the back of the unit.**

**1** Insert the plug into the »Medibus« socket on the back of the control unit and screw it on tightly.

- Take care to route the connection cable so that it does not get damaged.
- Ensure that the connector cannot be pulled out accidentally.

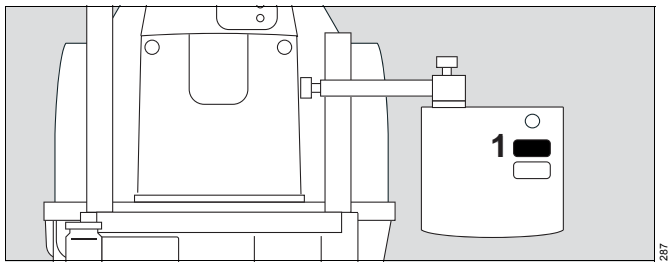


**NOTE**

All data that are transmitted to connected medical devices are for information only and may not be used as the sole basis for clinical decisions.

* optional equipment feature

# Check readiness for operation

## Before First-time Use

- Check that the mains power supply voltage matches the voltage rating specified on the nameplate (see page 140).
- Check that the height above sea level is correctly set (see page 83).

## Before Every Use

- Check that the system has been cleaned and disinfected in conformity with the regulations of the hospital. (see "Cleaning, disinfecting and sterilizing" on page 94).
- Check that an adequate gas supply is available for the equipment to be used.
- Check that the required add-on parts and therapy equipment are available and in good working condition. Use only reprocessed parts. Check readiness for operation in accordance with the relevant Instructions for Use.
- Check that there are no cracks or sharp, chipped edges on the incubator hood.
- Check that the hinges and catches on the hood are in proper working order.
- Check that the cables and hoses have been routed correctly and safely.
- If the control unit is mounted on the handle side, check that the cable to the control unit is routed through the cable guides on the basic pole.
- Check that there is sufficient space for adjusting the tilt angle and height.
- Connect the power plug to the mains supply.
- Check the nurse call system* prior to each use. Trigger an appropriate alarm, e.g. switch Caleo to skin temperature mode and remove the skin temperature sensors. If the nurse call system does not sound an alarm, call DrägerService.
- Check that the slits of the sensor unit are not fouled.

**WARNING**

**Do not use socket strips to connect the power supply of the Caleo®.**

**The patient leakage current and the ground leakage current may rise above the permitted limits if the grounding cable fails when equipment is connected to the socket strip. The risk of electric shock cannot be excluded.**

**Do not use socket strips to connect the power supply of the Caleo®.**

**WARNING**

**If the following checks are not performed before using the device, the patient may be endangered.**

**Before using the unit, make sure that the following tests have been performed**

---

* optional equipment feature

Disinfect hands before each test!

**WARNING**
**If the access ports do not open and close correctly, danger to the patient.**
**Check that the access ports are securely closed**

**1** Open the access port = press down the knurled area of the locking bolt.
- Press the access port closed until the locking bolt engages in the locked position.
- Try to open the access port outwards by pulling it by the edge – it must not open.

If the access port does not remain securely closed:
- Call DrägerService.

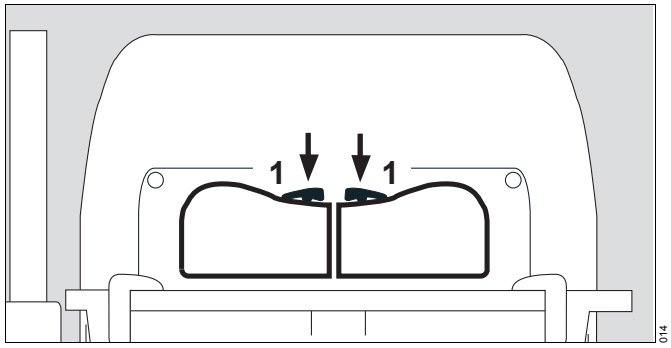


**WARNING**
**If the front flap and the moveable double wall are without secure fit, danger to the patient.**
**Check the front flap and the moveable double wall for a secure fit.**

- Open the front flap and fold it down (see page 20).

**2** Raise the front flap, press it closed and turn the two locking knobs outwards until they tangibly engage in the horizontal position.

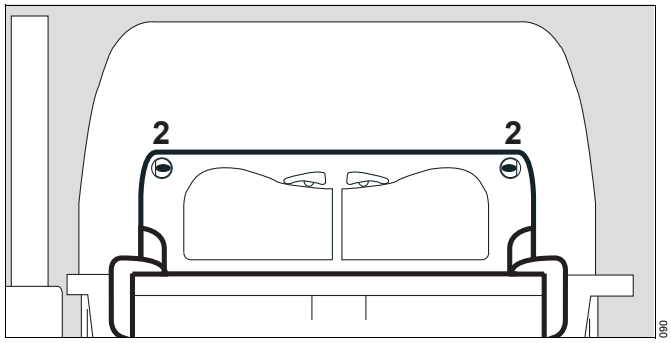


**WARNING**
**If locking knobs are not securely engaged, danger to the patient.**
**Make sure that both locking knobs are engaged. The red latches must no longer be visible.**

**WARNING**
**Danger of excessive cooling or overheating of the patient. If the moveable double wall is not parallel to the front flap, the hot air duct is interrupted.**
**The moveable double wall must be positioned parallel to the front flap. Align the moveable double wall if necessary!**

If the front flap does not stay in place, the red latches are visible or the double wall cannot be moved:
- Call DrägerService.

**WARNING**
**If the side flap does not have stable base, danger to the patient. Check that the side flap is securely engaged.**

- Open the side flap and fold it down (see page 21).

**3** Fold up the side flap and press it closed. Turn the two locking knobs outwards until they tangibly engage in the horizontal position.

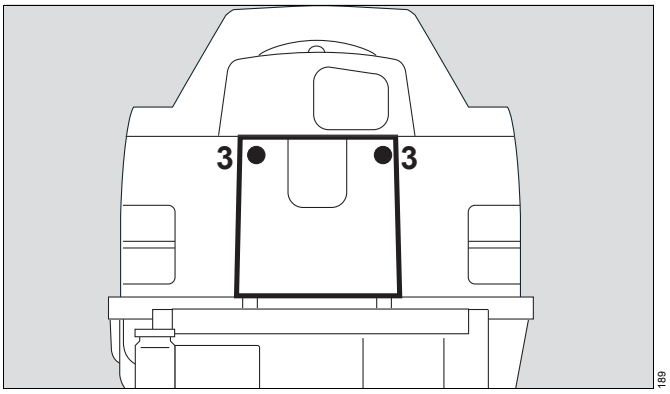


**WARNING**
**If locking knobs are not securely engaged, danger to the patient.**
**Make sure that both locking knobs are engaged. The red latches must no longer be visible.**

If the side flap fails to remain engaged or if the red latches are visible:

- Call DrägerService.

**WARNING**
**If the double wall is not securely engaged, danger to the patient. Check that the double wall is firmly seated.**

**1** Check that the double wall is securely attached to the hood by attempting to lift it off with light force.

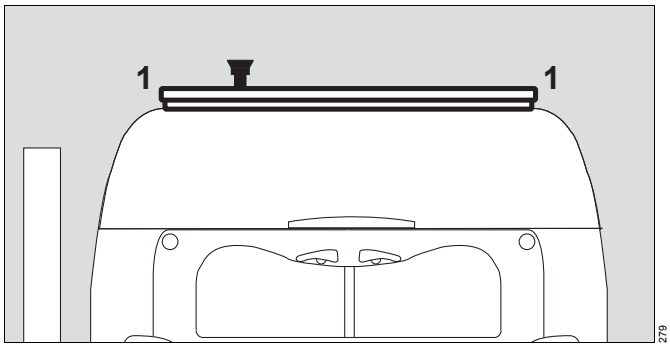


If the double wall is not securely attached to the hood or the double wall or parts of the locking mechanism are damaged:

- Do not use the double wall.
- Call DrägerService.

**WARNING**
**If the hood is loose, danger to the patient and user. Check that the hood is firmly seated.**

**2** Grasp the handle and open the canopy.

**3** Lift open the canopy (approx. 60°).

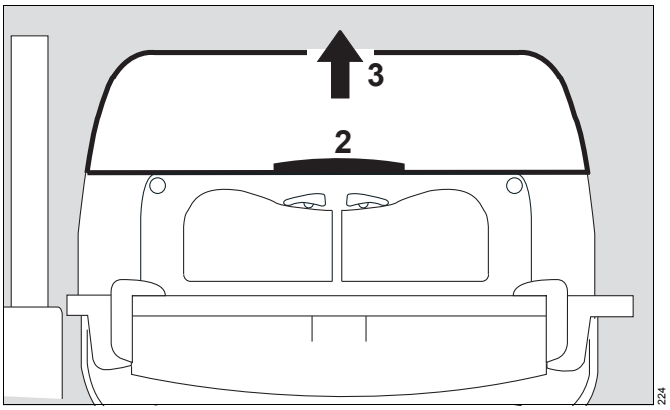

**4** Raise the side prop.
- Lower the canopy until the prop is secured in the slot of the canopy.
- Repeat the test on the other side.

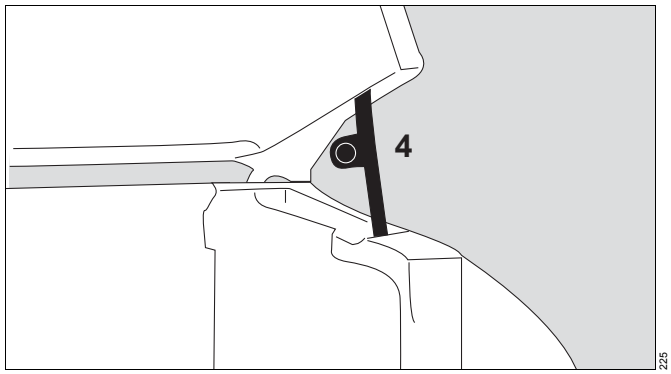


If the canopy fails to remain open:
- Call DrägerService.

**1** Hold the canopy with both hands using the handles on the side.
**2** Lift the canopy horizontally off the pillar elements.

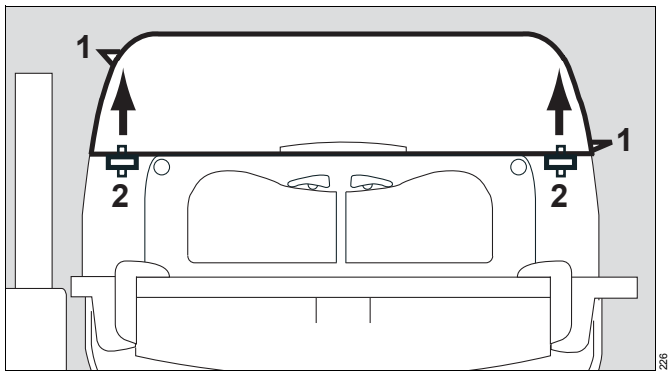


If the canopy props are damaged:
- Call DrägerService.

**WARNING**
**If the trough is loose, danger to the patient.**
**Check that the trough is firmly seated.**

- Remove the hood.
- Remove the mattress.
- Remove the bed.

**3** Check the catches of the trough.
- Place the bed on the trough.
- Place the mattress on the bed.
- Refit the hood.

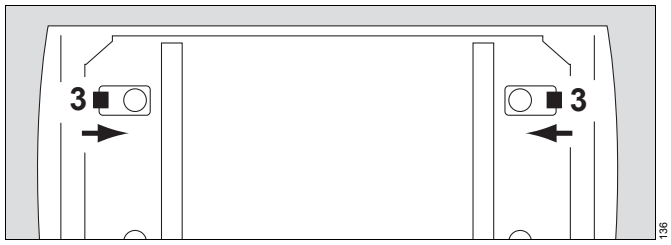


If the catches for the trough are damaged:
- Call DrägerService.

**Removing the bed**

- Open the front flap and fold it down.

**4** Turn both knobs to the vertical position marked ,

**5** Grasp the bed by the recessed handle or by the knobs and pull it out towards the front as far as it will go.

**5** Push the bed back until it clicks into place,

**4** Turn both knobs to the position marked .

- Close the front flap.

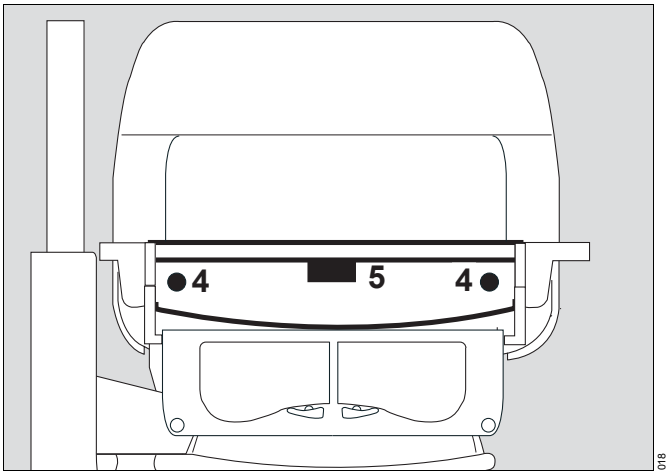


If the bed cannot be pulled out or pushed in or if the knobs are damaged:

- Call DrägerService.

**WARNING**

**If the bed is not fully pushed in, the hot air duct will be interrupted, causing the control system to malfunction. The result may be excessive cooling or overheating of the patient.**

**Slide the bed in fully.**

**WARNING**

**If the self-test is not activated, the acoustic alarm generator may be faulty. Danger to the patient.**

**Activate the self-test, check acoustic alarm generator.**

**1** Switch on the unit = press the on/off switch until it clicks into position.

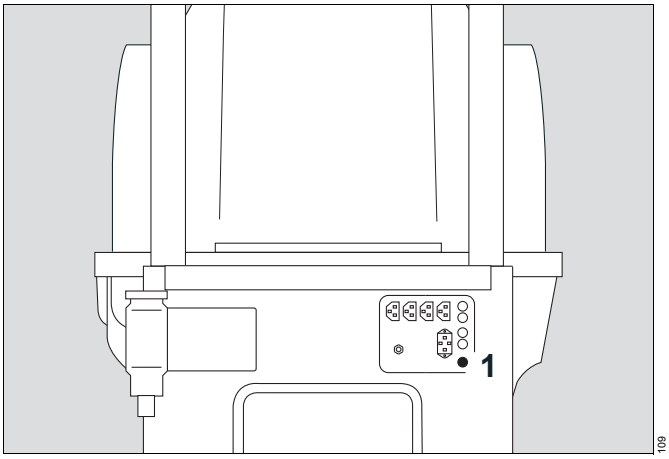


During the self-test, the functions of the machine are checked.

The audible signal, alarm beep sequence, screen displays and LEDs must be checked by the user.

– An audible warning signal and an alarm beep sequence are sounded.

If the warning signal or alarm beeps are not sounded,

- Call DrägerService.

– The screen and LEDs initially go dark and are then lit.

If individual pixels fail to light up or screen images are burned in, or if the LEDs fail to light up,

- Call DrägerService.

– The opening screen is displayed.

If the opening screen is not displayed,

- Call DrägerService.

The unit is switched on.

**Check the bed-tilt mechanism**

**1** Tilt the bed.

During the tilting process, the entire housing of the Caleo® must move uniformly. If not:

- Call DrägerService.

**CAUTION**

Danger of getting crushed between housing and housing support if the position is tilted, danger to the patient.

Do not reach in between the housing and the housing support while the housing is moving.

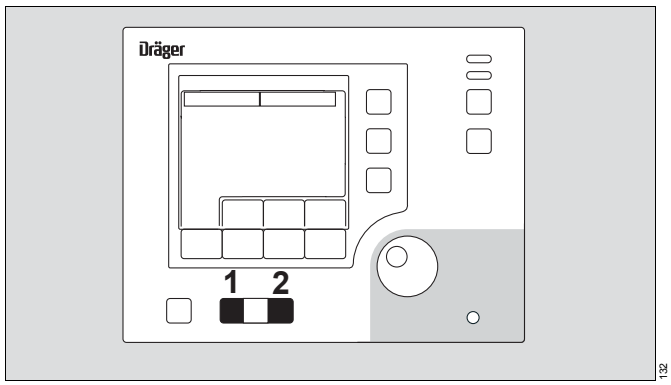


**2** Return the bed to the horizontal position (see page 27).

- The spirit levels in the bed show whether the bed is horizontal. This check is especially important when using the built-in weighing scale (see page 88)!

If the spirit levels are damaged:

- Call DrägerService.

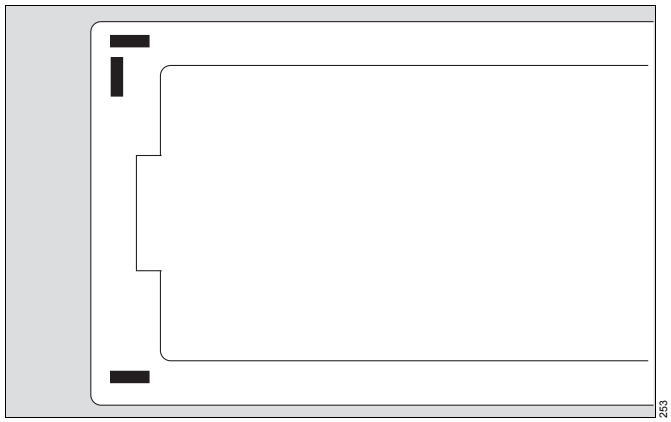


**Check the height adjustment mechanism***

- Operate both foot pedals in succession to raise and lower the Caleo® (see page 26).
- Then adjust to a comfortable working height.

When adjusting the height, the entire housing of the Caleo® must rise or descend uniformly. If not:

- Call DrägerService.

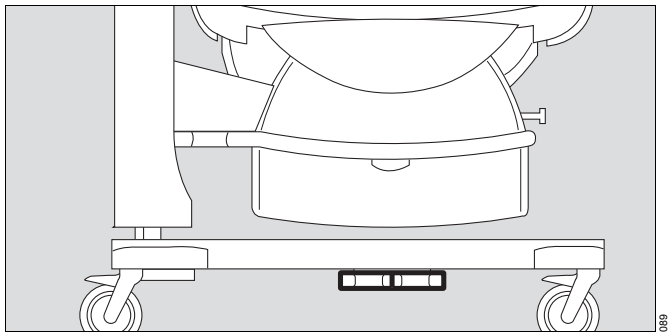


**Check power failure alarm**

- Remove the mains plug.

**3** The power failure LED must flash.

An intermittent tone must start. The volume of this tone must remain constant for at least 30 seconds.

If the volume decreases too soon:

- Leave the incubator connected to the mains and switched on for 24 hours to recharge the battery.
- Repeat the test.

If the volume again decreases too soon:

- Call DrägerService.

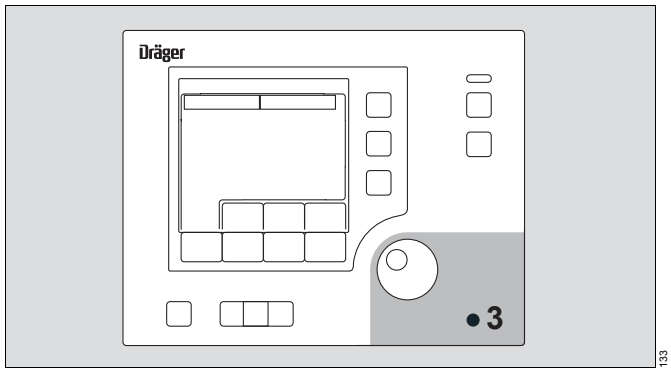


* optional equipment feature

**Check the fresh air filter**

- To simplify the removal of the fresh air filter, tilt the device page 27.

**1** Check the expiry date: see the label on the unit.

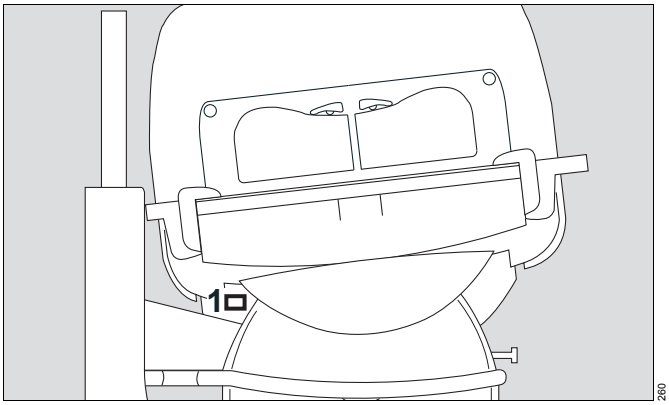


**2** Press down the knurled part of the clip and open the filter flap.

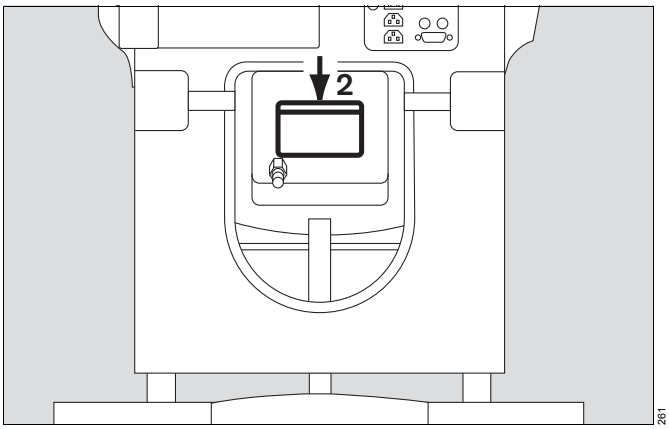


If a filter is already in position:

- Check the condition of the filter.

Replace the filter when

– the filter is fouled, damaged or moist.
– the expiry date has been reached.
– the filter has been used with an infectious patient.

- Discard the old filter.
- Fit a new filter.

**Inserting the filter:**

- Insert the filter in the open filter flap.

**2** Close the filter flap.
Make sure that filter flap clicks in place.

- Write down the expiry date of the new filter (2 months after installation) on the label.

**1** Stick the label to the device.

When operating the unit with skin temperature sensors, it is important that the sensors are tested before being used on the unit (see "Using skin temperature measurement" on page 49).

## The incubator is ready for operation when all checks have been carried out successfully.

# Operation

**Operation** . . . . . 40

Precautions . . . . . 40
Switching on Caleo® . . . . . 44
Using air temperature control . . . . . 45
Alarms . . . . . 48
Using skin temperature measurement . . . . . 49
Changing over between air/skin temperature control . . . . . 51
Using skin temperature control . . . . . 53
Alarms . . . . . 56
Using humidity control . . . . . 58
Setting AUTO humidity . . . . . 59
Manually adjusting the set value . . . . . 59
Alarms . . . . . 61
Using $O_2$- control . . . . . 62
Adjusting the set value . . . . . 63
Alarms . . . . . 65
Using "Day and Night" . . . . . 66
Selecting menus . . . . . 67
Kangaroo mode . . . . . 67
Alarms . . . . . 69
Trend display . . . . . 71
Trend analysis . . . . . 74
Trend selection . . . . . 76
Cleaning Mode . . . . . 78
Configuration . . . . . 81
Activating configuration mode . . . . . 81
Language/date/time . . . . . 82
Setting system parameters . . . . . 83
Setting alarms . . . . . 84
$O_2$ Sensor Information . . . . . 86
Viewing software information . . . . . 86
Lock key pad functions . . . . . 87
Alarm suppression . . . . . 87
Weighing scale . . . . . 88
Weighing without tare . . . . . 91
Ending operation . . . . . 92
Switch off the device . . . . . 92

# Operation

## Precautions

Before each use, check that the unit is ready for operation (see page 32).

**WARNING**
**Risk of extubation or danger of deconnection, risk to patient.**
**Ensure that all hoses and cables are routed correctly and safely without obstruction!**

**NOTE**
Do not leave lively patients unmonitored, risk to patient possible.
Lively patients must be observed with particular care.

**WARNING**
**If the hood, front flap, side flap or access ports are open or the bed is pulled out or the hose modules removed, watch the patient continuously to prevent any possibility of their falling out of the incubator.**

**CAUTION**
The bed can be damaged when leaning on it, maximum load 5 kg.
Do not lean or rest any weight on the bed when it is pulled out.

**WARNING**
**A cold device can cool the patient, risk to patient.**
**Allow time for the incubator to warm up before use (page 121).**

**CAUTION**
Risk to patient due to uncontrolled increase in air temperature due to external heat sources, such as sunlight, heat lamps, spot lamps and electric cushions.
Avoid additional heat sources.

**WARNING**
**Risk to patient due to too low or too high core temperature.**
**The patient's core temperature must be regularly monitored with an independent thermometer.**

**WARNING**
**Risk to patient due to treatment decisions on the basis of the measured skin temperature by unauthorised persons.**
**The conclusions to be drawn from the measured skin temperature are the responsibility of the attending physicians.**

**WARNING**
**Risk to patient due to skin temperature control, patients suffering from shock or fever can be undercooled or over heated.**
**Skin temperature control mode must not be used on babies who are in shock or who have high temperature!**

**WARNING**
**Risk to patient if skin temperature control mode is used on twins.**
**Caleo exercises control on only one patient. Danger of hypothermia or overheating.**
**For twins, the air temperature control mode must be used.**

**WARNING**
**Risk to patient of hypothermia or overheating if the positions of the skin temperature sensors are confused. Skin temperature control is exercised with the yellow skin temperature sensor (T1).**
**Make sure not to confuse the positions of the skin temperature sensors.**

**WARNING**
**Risk of burns to patient if a cloth is placed on the hot air duct.**
**The hot air control is disrupted, causing a risk of burning if the air from the hot air duct is channelled directly to the patient.**
**Do not place any cloth on the hot air duct.**

**WARNING**
**Risk to patients and/or user if not all the braked castors are locked. The castor with direction lock does not have a brake.**
**When parking the unit, apply the brakes of all braked castors.**

**NOTE**
When treating larger babies, their increased heat production could lead to a rise in the air temperature inside the Caleo®.
Remove the double wall.

**NOTE**
Disruption of the control of Caleo if there is a difference between ambient temperature and incubator air temperature of <3 °C.
The room temperature must be at least 3 °C lower than the air temperature in the Caleo® incubator.

**CAUTION**
Risk to patient due to possible cross infection when treating twins.
Pay attention to the risk of cross-infection.

**WARNING**

**Fire hazard from supply of $O_2$**

- **Avoid open fire or smoking. Textiles, oil and plastics can very easily catch fire and burn rapidly in an $O_2$-enriched atmosphere.**
- **All fittings and seals in contact with oxygen must be kept free of oil and grease!**
- **Open valves on $O_2$ cylinders slowly.**
- **Do not use Caleo® in the presence of flammable anaesthetic gases or disinfecting agents. Risk of explosion.**
- **Do not use or keep flammable liquids, such as alcohol, ether or acetone, in Caleo®!**
- **Do not use any electrical appliances in the patent capsule unless this equipment is expressly designed for use in explosion-hazard areas.**

**WARNING**

**Physiological risk to patient due to increased $O_2$ supply. When making treatment decisions pay attention to physiological risks from $O_2$.**

**NOTE**

Physiological risk to patient due to increased $O_2$ supply. During $O_2$ therapy, monitor the $O_2$ concentration with a separate $O_2$ monitor.

**WARNING**

**Risk to the patient due to of hyperoxemia (possibility of damage to the eyes) or hypoxemia (possibility of brain damage) from $O_2$ therapy. The air in the incubator should only be enriched with $O_2$ when prescribed by a doctor.**

**Oxygen is classified as a drug. $O_2$ enrichment must be controlled on the basis of measured $O_2$ saturation in the patient's blood or $SaO_2$ or $SpO_2$). Otherwise, there is a danger of hyperoxemia (possibility of damage to the eyes) or hypoxemia (possibility of brain damage).**

**WARNING**

**Risk of impairment of device functioning due to the precipitation of atomized substances.**

**Medicaments and similar substances must not be atomized in the patient capsule.**

**CAUTION**

Risk of damage to sensor unit from covering or impurities or use as fastening point.

Do not cover the sensor unit and do not fasten anything on it. Keep the slits of the sensor unit free of impurities.

**WARNING**

**Physiological risk to patient due to increased $CO_2$ concentration.**

**In the event of a power failure, the $CO_2$ level in the patient capsule may rise due to an insufficient supply of fresh air.**

**Heed the risk of $CO_2$ poisoning, re-stablish power supply connection.**

**CAUTION**

Alarm cannot be detected via the central alarm indicator if the alarm is suppressed (see page 139).

Always pay attention to the bar LEDs and the alarm signal on the control unit.

**WARNING**

**Danger to patient from wrongly actuated front flaps.**

**When closing the front flaps, make sure that the patient is not lying in the closing path. The front flaps are not shut correctly until the red latches are no longer visible.**

**When opening and closing the front flaps, make sure that hoses and cables are not caught in the moveable double wall!**

**The moveable double wall must be positioned parallel to the front flap otherwise the warm air duct may be obstructed!**

**WARNING**

**Danger to patient from wrongly actuated side flaps.**

**When opening and closing the side flaps, make sure that the hoses and cables are routed safely and clear of any obstructions!**

**The side flaps are not shut correctly until the red latches are no longer visible.**

**CAUTION**

To avoid bacterial contamination when reaching through the access ports into the patient capsule of Caleo, observe suitable hygiene measures and, if possible, do not touch the surface of the patient capsule.

**CAUTION**

Danger to patient from wrongly used hood.

The hood must not be used as a shelf for laying clothing, instruments etc.

Do not hang any objects from the hooks for the double walls.

Before moving the hood, make sure that nothing has been laid on top of it.

When fitting and removing the canopy, hold it firmly in your hand. The canopy prop must engage correctly. Do not lift the hood when the canopy is open. Do not tilt the hood over the side. When closed, make sure that the canopy sits firmly in place.

**WARNING**

**Hoses and/or cables risk being trapped when tilting the Caleo® and when opening and closing the front flap.**
**Ensure that all hoses and cables are routed correctly and safely without obstruction!**

**NOTE**

Risk of damage to control unit due to improper handling
Position the control unit so that the screen is clearly visible from the working area. Do not mechanically load the cable by e.g. hanging objects from it. If the control unit is mounted on the handle side, never remove the cable to the control unit from the cable guides on the basic pole.
Do not place any liquid containers above the control unit.

**CAUTION**

Risk of damage to Caleo or accessories when adjusting the tilt angle and height.
When fitting accessories, please note: The accessory equipment must not collide with the unit when adjusting the tilt angle and height of Caleo®.

**NOTE**

Risk of damage to Caleo or accessories when adjusting the tilt angle and height.
When fitting accessories, please note: The accessory equipment on the handle side does not move with the main unit during height adjustment of Caleo® (see page 123). Position accessories such that there is sufficient free space.

**WARNING**

**Risk of tilting over if the maximum load of the accessories is exceeded.**
**Observe the maximum loads of the accessories.**

**WARNING**

**Kangaroo mode**
**Danger to patient of hypothermia or overheating.**
**The patient's core temperature must be monitored constantly as it is not part of the automatic temperature control.**
**Particular attention must be paid to vital parameters of critical patients.**

**When using Phototherapy**

**WARNING**

**Danger to patient of overheating.**
**Absorption of light through the patient's skin will supply heat. This may increase the core temperature.**
**Monitor the core temperature of the patient regularly with particular care during phototherapy.**

**WARNING**

**Reduce the set value of air temperature approx. 15 minutes before starting phototherapy by approx. 2 °C.**
**Decrease the set value for humidity.**
**The room temperature must be at least 3 °C lower than the air temperature in the Caleo® incubator. This value applies to Dräger Type 4000 phototherapy units.**
**When using other phototherapy units, especially units without a built-in fan, the temperature in the Caleo® incubator may rise even more sharply.**
**Phototherapy may only be used with a stand.**

**WARNING**

**Fluid balance can be affected adversely by phototherapy.**
**The supply of fluid to the patient must be increased, e.g. by parentral infusion, to compensate for the increased loss of water during phototherapy.**

**WARNING**

**The phototherapy light and Caleo® hood must not be covered with cloths, aluminium foil or other materials in order to boost the phototherapeutic effect to avoid the risk of overheating the patient.**
**Do not cover the phototherapy light and hood of Caleo with cloth, aluminium foil etc.**

**Weighing scale**

**WARNING**

**If you fail to observe the Instructions for Use (see page 88), considerable measuring errors may occur when determining the patient weight.**
**Only use the built-in scale to determine the weight of the patient.**
**To back up critical therapeutic decisions that are based on the weight of the patient, check the measured weight with the help of a reference measurement carried out on an external scale.**

**Transport within hospitals**

**WARNING**

**During internal transport outside the hospital building, the castors can be damaged or dislodged. Risk of toppling over.**
**An even floor surface must be ensured when moving the Caleo.**
**Do not use Caleo® outside the hospital building.**
**The Caleo® may only be moved when empty.**

**High noise levels**

**NOTE**

Excessive noise levels that can disturb the patient may be caused by:

– using oxygen hoods and delivering pressurised gases,
– wear on the bearings of the fan motor,
– Storage of parts on the hood, hence do not place any parts on the hood.

Observe the specified maintenance intervals, see page 106.

**Cleaning Mode**

**WARNING**

**Danger to the patient.**
**Use the Cleaning mode only if Caleo® is empty.**

**WARNING**

**Risk of burning from the heater!**
**Allow Caleo® to cool down before stripping it down.**

**WARNING**

**Risk of slipping due to moisture under the Caleo. During or after the Cleaning mode, condensation could form under the housing of the Caleo®!**
**AUTO humidity can be used to minimise the effect of condensation (page 135).**

**Electrical safety**

**WARNING**

**With add-on devices that do not conform to IEC 60601-1, the risk of an electric shock cannot be ruled out if there is an error.**
**Only use electromedical devices conforming to IEC 60601-1.**

**WARNING**

**Use of socket strips to connect the power supply of the Caleo® may lead to the risk of an electric shock.**
**The patient leakage current and the ground leakage current may rise above the permitted limits if the grounding cable fails when equipment is connected to the socket strip. The risk of electric shock cannot be excluded.**
**Do not use power socket strips to connect the power supply of the Caleo®!**

**WARNING**

**When using the integrated socket strip: Non-observation of the permissible total ground leakage current and total current consumption can cause the danger of an electric shock.**
**Take into account the total leakage current and total current consumption. See "Technical Data" on page 120.**

**WARNING**

**Risk of electric shock from external devices connected to the interface if Caleo is not connected to the power supply socket via the power cable or not grounded via the grounding bolt on the back of the unit.**
**Only connect external devices to the interfaces if Caleo is connected to the power supply socket via the power cable or the device is grounded via grounding bolt on the back of the unit.**

**WARNING**

**Risk to patient or user from external devices that are not fed by electricity.**
**Caleo does not monitor the power supply to external devices.**
**Monitor the power supply to external devices separately.**

## Switching on Caleo®

- Connect the incubator to the mains power supply.

**1** Switch on the unit = press the on/off switch until it clicks into position.

**2** Position the control unit so that the screen is clearly visible from the working area.

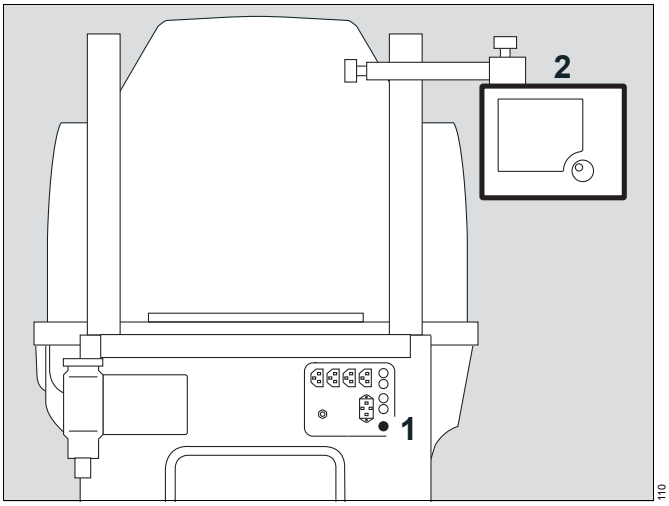


An audible signal is emitted.

– The opening screen is displayed.

The incubator performs a self-test.
During the self-test, the functions of the machine are checked. The audible signal and screen displays must be checked by the user, see page 36.

– After the self-test, the standard screen for air temperature control is displayed.

– The currently activated function is always highlighted by a light background.

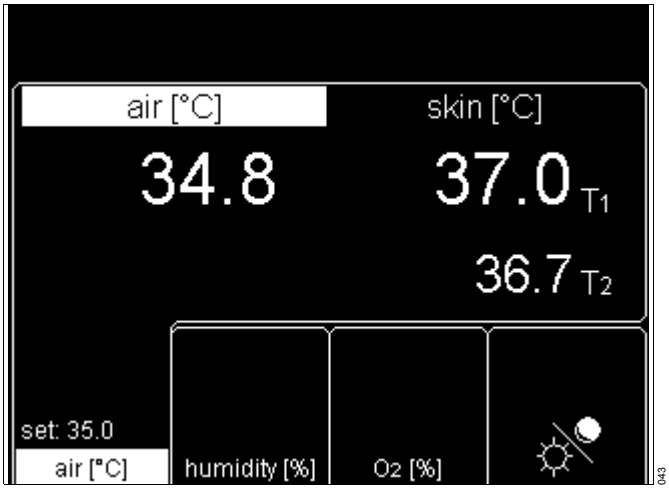


With air temperature control, the unit requires a warm-up time of approx. 20 minutes. During this period the alarm for "Air temp. deviation above 1.5 °C" is suppressed.

## Using air temperature control

**WARNING**
**Risk to patient is possible if there is a difference between core temperature and measured skin temperature.**
**The patient's core temperature must be measured regularly with an independent thermometer.**
**Adust the temperature settings to the requirements of the patient. Pay attention to sunlight.**

**NOTE**
Cooling of patient due to fall in air temperature when the hood is open.
Do not leave the hood open for long periods.

**Adjusting the set value**

| | |
|---|---|
| Standard set value range | 28 °C to 37 °C |
| Extended set value range | 37.1 °C to 39 °C |
| | 20 °C to 27.9 °C |
| Default setting | 33 °C |

**1** Adjust the set value = press the key.

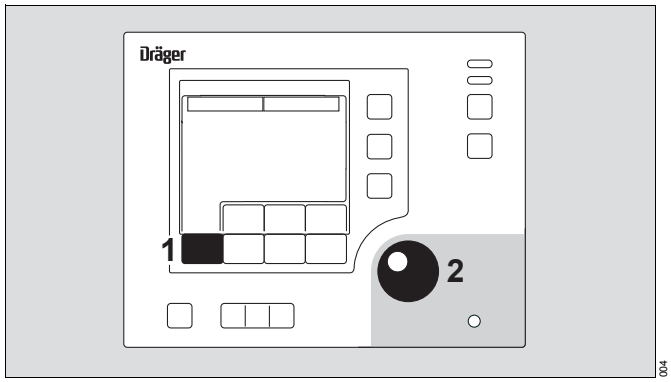


– The actual measured value and the set value are displayed on the screen both as bar graphs and as numerical values.

– The message »set value with rotary knob« appears at the top of the screen.

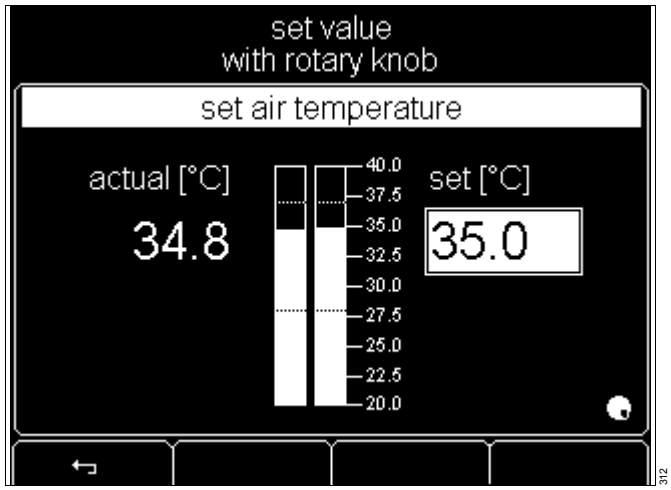


**2** Increase the set value = turn the rotary knob clockwise.
**2** Decrease the set value = turn the rotary knob counter-clockwise.
**2** Confirm the set value = press the rotary knob.

If you do not wish to change the settings:
press ↩ = Do not activate new settings.
The display returns to the standard screen. The previous set value is retained.
or
– Wait for 7 seconds: 4 short beeps are emitted. Caleo® reminds the user to press the rotary knob. The display returns to the standard screen. The previous set value is retained.

**WARNING**
**Overheating of patient is possible if the extended set value range is used.**
**Monitor the body temperature continuously.**

If the set value exceeds the standard set value range

– The following message appears in the upper section of the screen.
  »Confirm the extended range by pressing the rotary knob«.

- Confirm the extended set value range = press the rotary knob.
- Continue increasing the set value = turn the rotary knob clockwise.

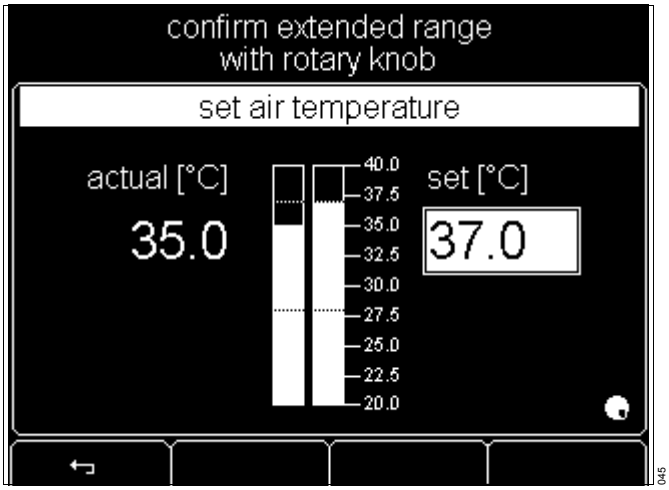


– The message »⚠ >37.0 °C« appears on the screen.
– The following message appears in the upper section of the screen.
  »set value with rotary knob«

- Confirm the set value = press the rotary knob.

– The display returns to the standard screen. The measured values are displayed.
– The set value and »set: >37.0 ⚠« are displayed alternately.
– The yellow bar LED lights up.
  If the yellow bar LED flashes, the set value has been increased by more than 1.5 °C, see page 48, or other alarms are active.

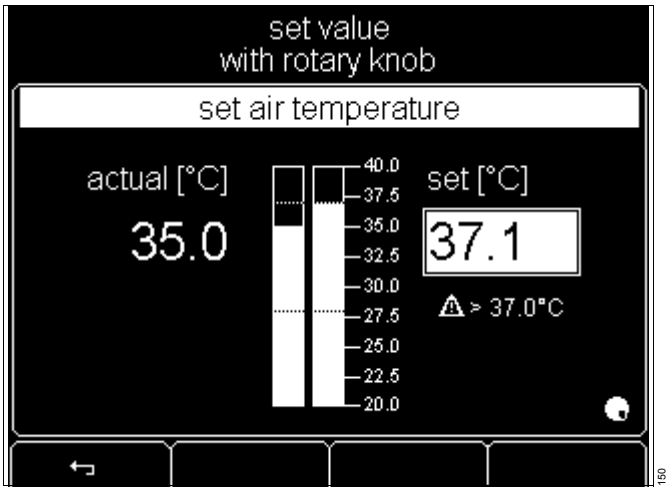


If the specified set value is below the standard range

– The following message appears in the upper section of the screen.
  »confirm extended range with rotary knob«.

- Confirm the extended set value range = press the rotary knob.
- Continue decreasing the set value = turn the rotary knob counter-clockwise.

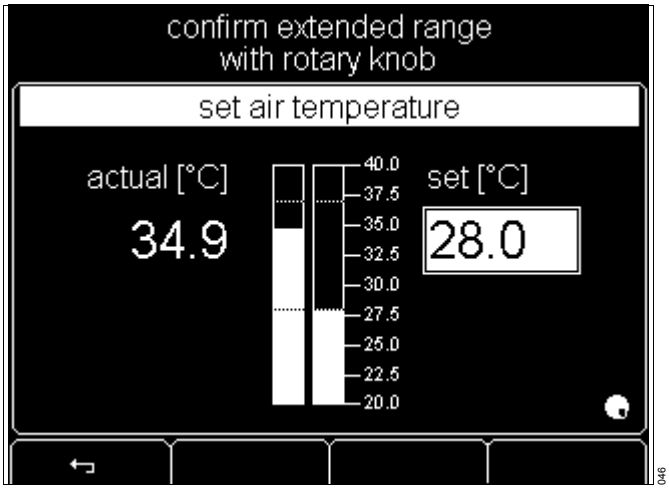

– The message »⚠ <28.0 °C« appears on the screen.
– The following message appears in the upper section of the screen:
»set value with rotary knob«

● Confirm the set value = press the rotary knob.

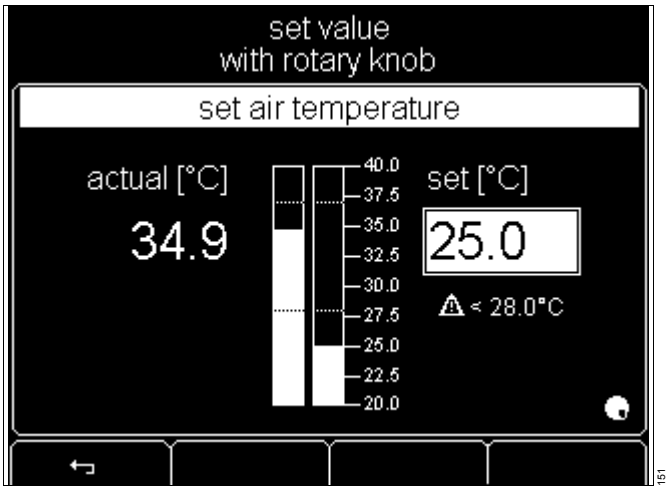


– The display returns to the standard screen. The measured values are displayed.
– The adjusted set value and »set: <28.0 ⚠« are displayed alternately.
– The yellow bar LED lights up.
If the yellow bar LED flashes, the set value has been decreased by more than 1.5 °C or 2.5 °C, see page 48, or other alarms are active.

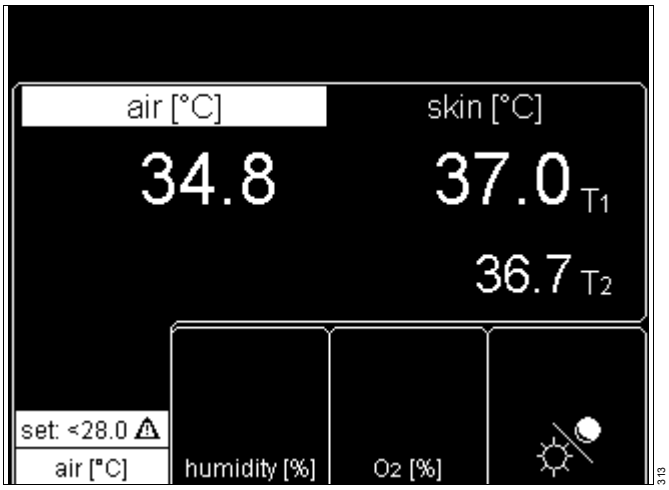


**Reducing the air temperature in Caleo®**
The cooling rate depends on the incubator design and can be increased by:
– removing the double wall
– reducing the outside temperature (if possible)
– reducing the set humidity value.
The cooling rate is not accelerated by:
– reducing the air temperature setting below the actually desired value.

**WARNING**
**The patient can fall out if the hood, the front flap or the access ports are open. Open the hood only in most urgent cases.**
**In this case, the patient must be monitored constantly to ensure that he or she cannot fall out of the incubator.**

If you do not wish to confirm the set value:
**1** Cancel adjustment of the set value = press key.
The display returns to the standard screen. The previous set value is retained.
or
– Wait for 7 seconds: 4 short beeps are emitted. Caleo® reminds the user to press the rotary knob. The display returns to the standard screen. The previous set value is retained.

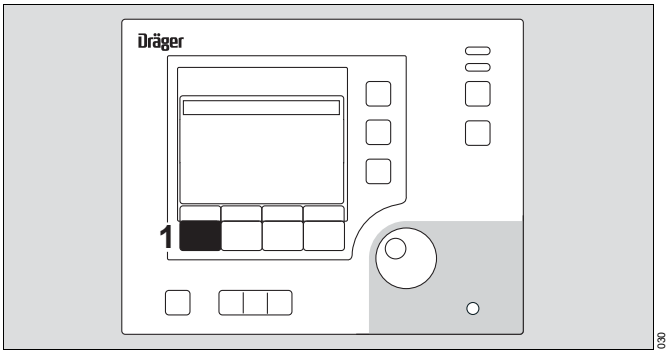

**Alarms**

Alarm limits can be changed in the configuration (see page 85).

Deviation between the set and measured air temperature exceeds *1.5 °C*[*]:

– The alarm message appears on the screen.
  »**Air temp. deviation above** *1.5 °C* «,
– The alarm tone sequence (3 beeps) is sounded,
**1** The central alarm indicator lights up[**],
**2** The measured value flashes,
**3** Yellow bar LED flashes.

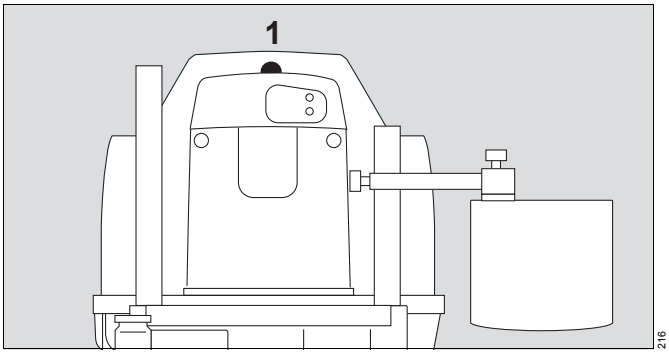


The intermittent alarm tone sequence can be muted for 15 minutes.

**4** Suppress intermittent alarm tone = press key

or

**5** Press the rotary knob.
– The warning message remains on the screen,
– The intermittent alarm tone is muted,
**1** The central alarm indicator goes out,
**2** The measured value continues to flash,
**3** Yellow bar LED continues to flash.

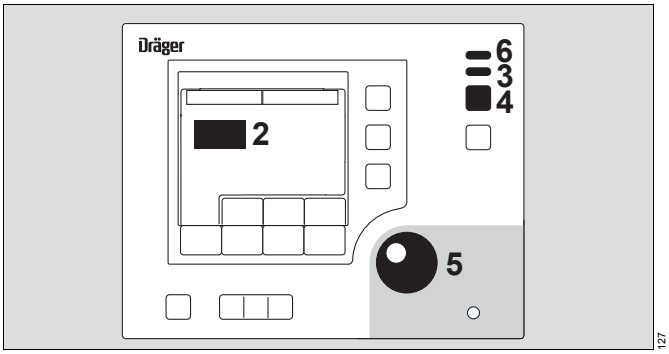


When the measured value returns within the range ±*1.5 °C*:

– The warning message disappears,
– The intermittent alarm tone is muted,
**1** The central alarm indicator goes out,
**2** The measured value lights up continuously,
**3** Yellow bar LED goes out. If the extended set value range is used the yellow bar LED will light up.

If the air temperature is over *38 °C* (or over *40 °C* in the case of the extended set value range):

– The screen displays the warning message:
  »**Air temperature too high**«,
– The alarm tone sequence (5 beeps) is sounded,
**1** The central alarm indicator lights up**,
**2** Measured value flashes,
**6** Red bar LED flashes.

The alarm tone can be muted for 5 minutes.
Caleo® heats up the patient capsule if necessary to attain the desired air temperature setting.

**2** The measured value continues to flash,
**6** Red bar LED continues to flash.

When the air temperature again drops below the alarm value:

**4** Press the key to cancel the alarm.

Other alarms, see "Message – Cause – Remedy" on page 112.
See "Alarm descriptions" on page 138.

---

* The numerical values in this description are examples. See "Setting alarms" on page 84.
** The central alarm indicator can be switched off.
See "Setting system parameters" on page 83.

## Using skin temperature measurement

**NOTE**

Directly before using the skin temperature sensors: Insert the yellow skin temperature sensor or white peripheral skin temperature sensor in the yellow or white socket and wait for the measurement signal to appear on screen.

**WARNING**

**To protect the device againt electrostatic discharging, do not touch the socket**

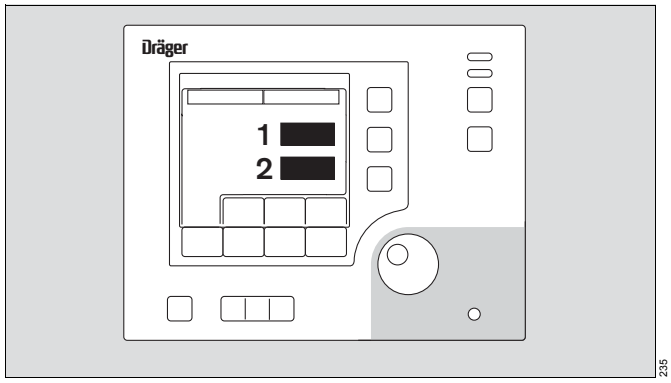


**1** Measurement signal from the yellow skin temperature sensor (T1)
**2** Measurement signal from the white peripheral temperature sensor (T2)

**NOTE**

If no measurement signal appears, replace the sensor (page 115).

**NOTE**

Skin temperature measurement can be used in air temperature control mode or skin temperature control mode.

Connect the temperature sensors for measuring the skin temperature and peripheral temperature

- Push the yellow skin temperature connector as far as it will go into the yellow connection socket of the sensor unit (skin temperature, T1). When using skin temperature control, the control functions refer to this sensor.
- Push the white peripheral temperature sensor connector as far as it will go into the white connection socket of the sensor unit (peripheral temperature, or skin temperature of the twin in the case of air temperature control mode, T2).
- Route the sensor cable through one of the flexible tubing grommets.
- Remove the protective foil from the adhesive pad and place the skin temperature sensor on the pad.
- Using the adhesive pad, attach the sensor tip to the appropriate part of the baby's skin.

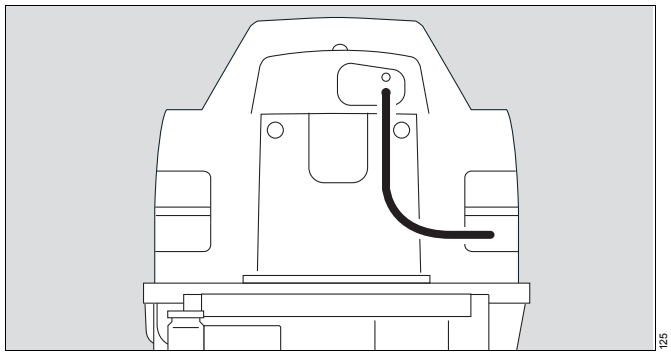


Positioning the skin temperature sensor (yellow):
If the baby is lying on his/her back:

- Stick the yellow sensor with the adhesive pad on the baby's abdomen, in the area of the liver.

If the baby is lying on his/her belly:

- Stick the yellow sensor with the adhesive pad on the baby's back, preferably in the area of the kidneys.

Positioning the peripheral temperature sensor (white):

- Stick the white sensor with the adhesive pad on the extremities, preferably on the foot or arm.

**WARNING**

**Risk to patient from using skin temperature sensors that are not approved by Dräger for Caleo. Overheating or hypothermia of patient is possible due to large measurement deviation.**

**Use only Dräger skin temperature sensors or sensors authorised by Dräger for Caleo®.**

**WARNING**

**Reuse of the disposable skin temperature sensors can impair the required measuring accuracy, risk to patient possible due to inadequate measurement accuracy.**

**Disposable sensors must not be cleaned for re-use.**

**CAUTION**

Using an adhesive pad other than the ThermoPad adhesive pad can impair the required measurement accuracy, risk to patient possible.

To attach skin temperature sensors to the patient, use only ThermoPad adhesive pads or similar adhesive pads with aluminium film.

**WARNING**

**Overheating of the patient is possible if the skin temperature sensor has fallen off, as a sensor that has falled off measures the air temperature. However, the air temperature does not exceed 39 °C.**

**Monitor the body temperature continuously.**

**CAUTION**

When measuring the rectal temperature with the yellow skin temperature sensor or the white peripheral temperature sensor, incorrect values are displayed, or the temperature is controlled on the basis of incorrect values.

Do not use the yellow skin temperature sensor or the peripheral temperature sensor to measure the rectal temperature.

**CAUTION**

If the air temperature control mode is activated and the skin temperature sensor plugged in, the temperature is not controlled based on the skin temperature. Only the measured skin temperature is displayed. However, in this case, the temperature is not controlled as a function of skin temperature.

## Changing over between air/skin temperature control

**WARNING**
**For babies who are in a state of shock, skin temperature control would increase the air temperature too much and would endanger the patient, as in this case the skin temperature is considerably lower than normal.**
**Do not use skin temperature control on patients who are in a state of shock. Use air temperature control, see page 45.**

**WARNING**
**For patients who have fever, skin temperature control would cool the air temperature too much and would endanger the patient, as in this case the skin temperature is considerably higher than normal.**
**Do not use skin temperature control on patients who have fever. Use air temperature control, see page 45.**

**WARNING**
**When treating twins in Caleo, the skin temperature control monitors the temperature of one patient only. Danger of hypothermia or overheating.**
**Do not use skin temperature control, use air temperature control, see page 45.**

**1** Change temperature control mode = press key.
**1** The LED for the control mode requiring confirmation flashes.

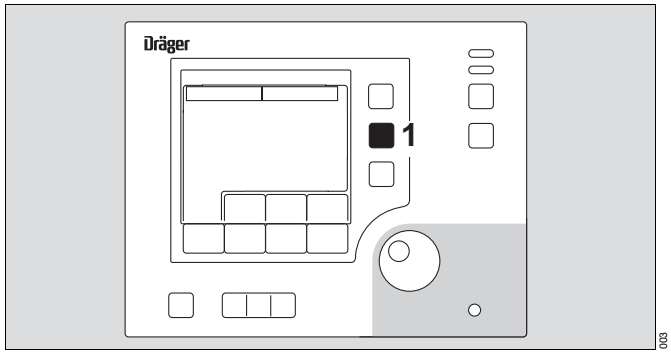


– The activated control mode is displayed on the screen. The actual and set values are displayed as bar graphs and numeric values.

– The following message appears in the upper section of the screen.
»set value with rotary knob«

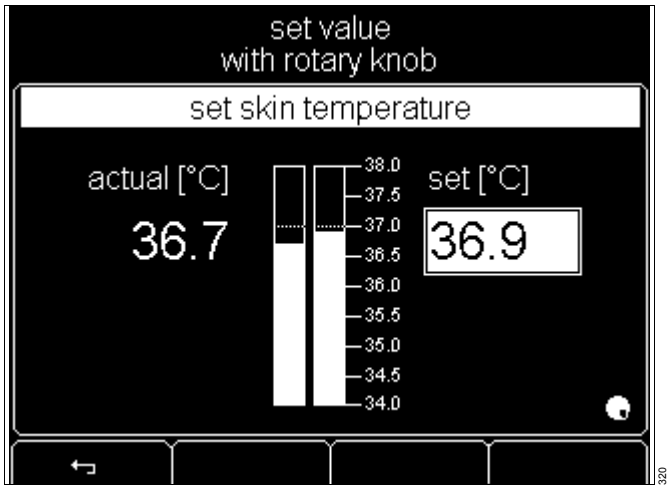

After the new mode has been activated, set the desired value with the rotary knob.

**1** The LED of the activated mode flashes.
**2** Adjust the set value = turn the rotary knob.
**2** Confirm the set value = press the rotary knob.

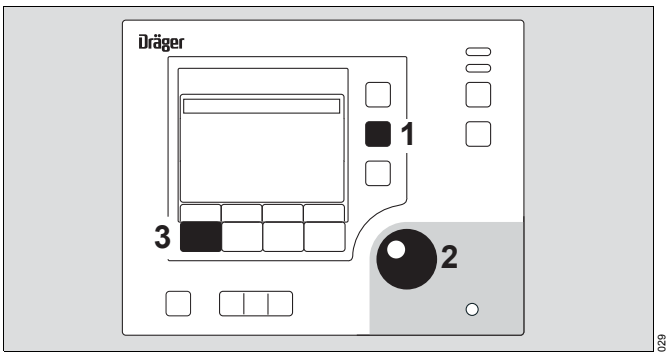


– The following message appears in the upper section of the screen.
»confirm the new mode with rotary knob«.

**2** Confirm the new mode = press the rotary knob.

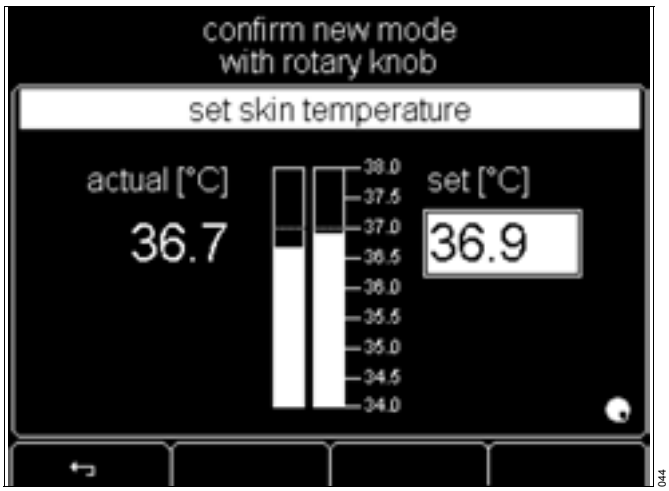


– The display returns to the standard screen.

**1** The LED of the activated mode is lit.

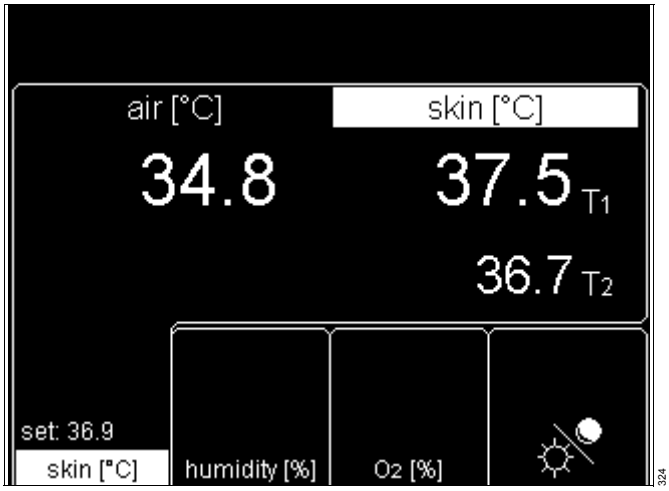


If you do not wish to change the settings:
**3** press ↵ = Do not activate new settings.
The display returns to the standard screen. The previous set value is retained.
or
– Wait for 7 seconds: 4 short beeps are emitted. Caleo® reminds the user to press the rotary knob. The display returns to the standard screen. The previous set value is retained.

## Using skin temperature control

**WARNING**
**For patients who are in a state of shock, skin temperature control would increase the air temperature too much and would endanger the patient, as in this case the skin temperature is considerably lower than normal.**
**Do not use skin temperature control on patients who are in a state of shock. Use air temperature control, see page 45.**

**WARNING**
**For patients who have fever, skin temperature control would cool the air temperature too much and would endanger the patient, as in this case the skin temperature is considerably higher than normal.**
**Do not use skin temperature control on patients who have fever. Use air temperature control, see page 45.**

**WARNING**
**When treating twins in Caleo, the skin temperature control monitors the temperature of one patient only. Danger of hypothermia or overheating.**
**Do not use skin temperature control, use air temperature control, see page 45.**

**WARNING**
**Risk of overheating to patient if the sticking positions of the core skin temperature sensor (yellow) and peripheral skin temperature sensor (white) are confused. Skin temperature control is regulated by the yellow skin temperature sensor (T1) (core).**
**Make sure not to confuse the positions of the skin temperature sensors.**

Do **not** attach the sensor under the baby, because otherwise the core temperature, not the skin temperature, will be measured and used as control parameter!

**WARNING**
**Risk to patient is possible if there is a difference between core temperature and measured skin temperature.**
**The patient's core temperature must be measured regularly with an independent thermometer.**
**Adust the temperature settings to the requirements of the patient. Pay attention to sunlight.**

**CAUTION**
Cooling of patient due to fall in air temperature when the hood is open.
Do not leave the hood open for long periods.

**Adjusting the set value**

| | |
|---|---|
| Standard set value range | 34 °C to 37 °C |
| Extended set value range | 37.1 °C to 38 °C |
| Default setting | 36.5 °C |

**1** Adjust the set value = press the key.

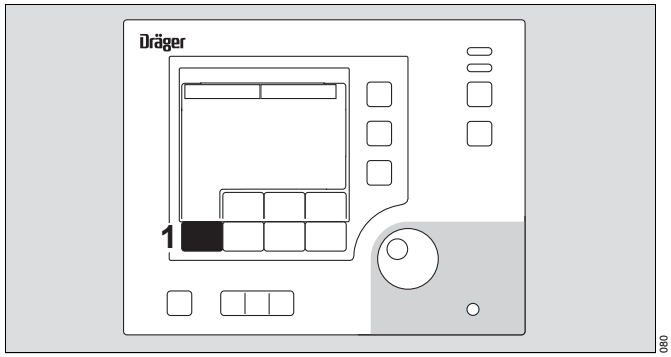

– The actual measured value and the set value are displayed on the screen both as bar graphs and as numerical values.
– The following message appears in the upper section of the screen.
  »set value with rotary knob«

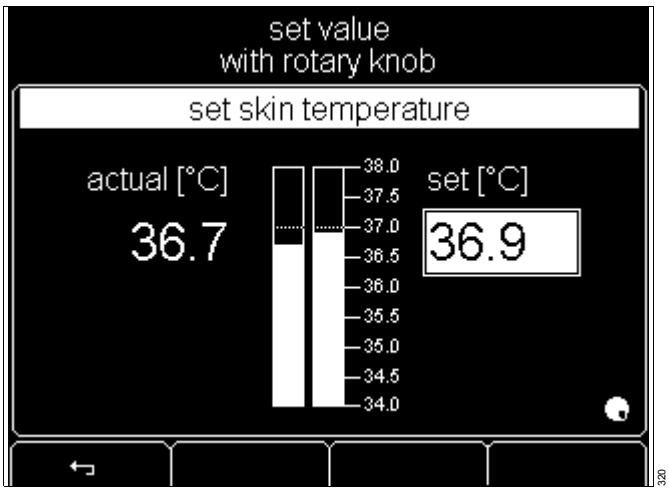


**1** Increase set value = turn rotary knob clockwise.
**1** Decrease set value = turn rotary knob counter-clockwise.
**1** Confirm the set value = press the rotary knob.

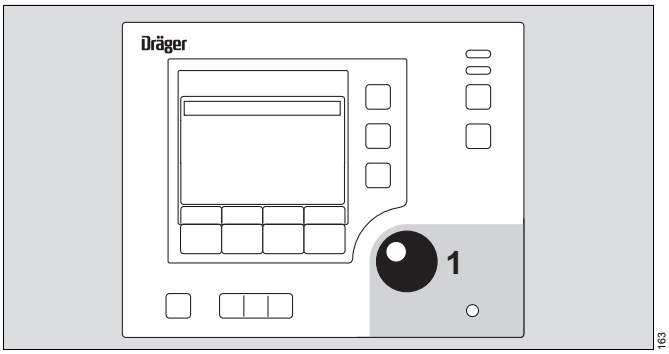


If you do not wish to change the settings:
press ⮐ = Do not activate new settings.
The display returns to the standard screen. The previous set value is retained.
or
– Wait for 7 seconds: 4 short beeps are emitted. Caleo® reminds the user to press the rotary knob. The display returns to the standard screen. The previous set value is retained.

**CAUTION**
More energy is supplied to the patient on selecting the extended set value range (temperature >37 °C). Activate only if required for the treatment.
Perform special monitoring of the body temperature or core temperature at regular intervals.

If the specified set value exceeds the standard set value range,
– The following message is displayed.
  »confirm the extended range with rotary knob«

**1** Confirm the extended set value range = press the rotary knob.
**1** Continue increasing the set value = turn the rotary knob clockwise.

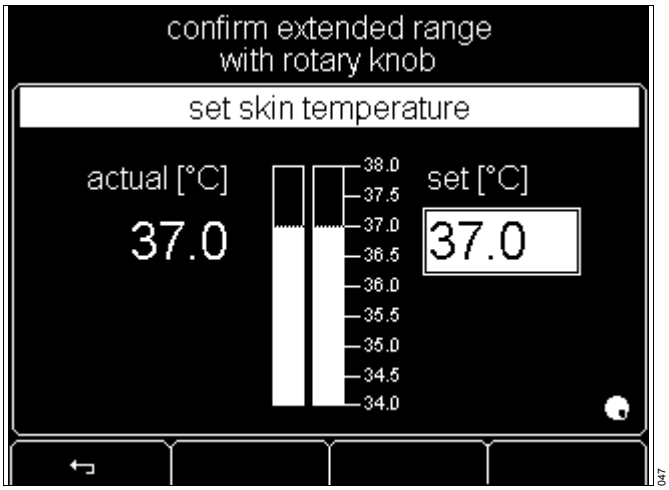

– The message »⚠ >37.0 °C« appears on the screen.
– The following message appears in the upper section of the screen.
»set value with rotary knob«.

● Confirm the set value = press the rotary knob.

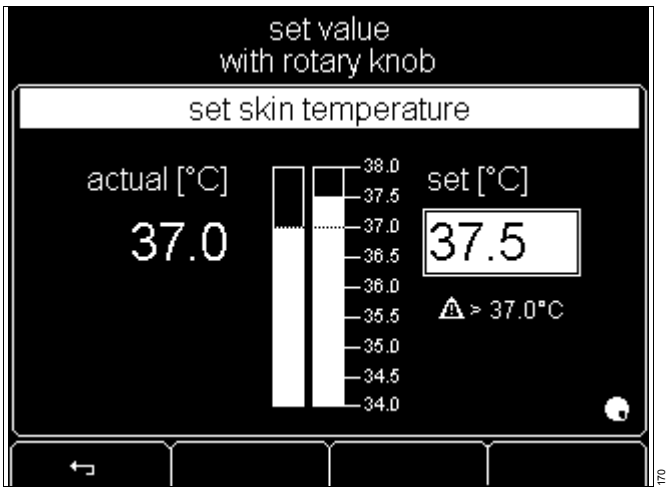


– The display returns to the standard screen. The measured values are displayed.
– The set value and »set: >37.0 ⚠« are displayed alternately.
– The yellow bar LED lights up.
If the yellow bar LED flashes, the set value has been increased by more than ±*0.5 °C**, see page 56, or other alarms are active.

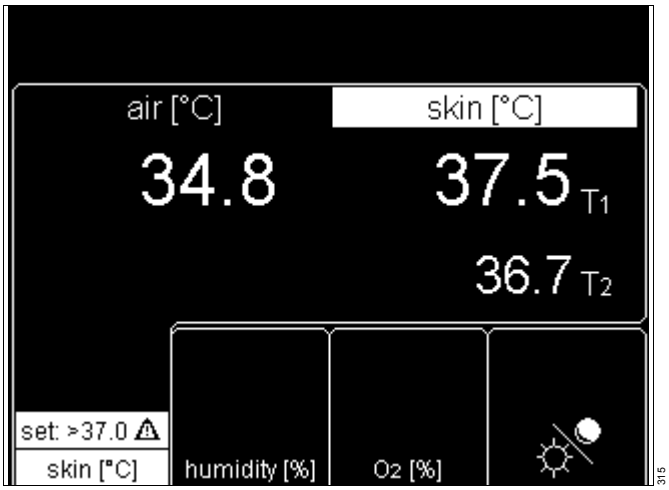


If you do not wish to confirm the set value:
● Cancel adjustment of the set value = press key.
The display returns to the standard screen. The previous set value is retained.
or
– Wait for 7 seconds: 4 short beeps are emitted. Caleo® reminds the user to press the rotary knob. The display returns to the standard screen. The previous set value is retained.

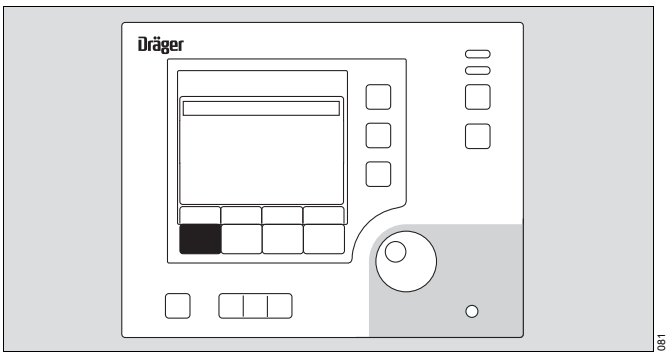


* Can be set to between 0.3 and 1.0 °C, see page 85.

**Alarms**

Alarm limits can be changed in the configuration (page 85).

If the deviation between the set and measured skin temperature exceeds ±*0.5* °*C*[*]:

– The alarm message appears on the screen.
  »**Skin temperature deviation. 1 more than** *0.5* °*C*«,
– The alarm tone sequence (3 beeps) is sounded,
**1** The central alarm indicator lights up[**],
**2** The measured value flashes,
**3** Yellow bar LED flashes.

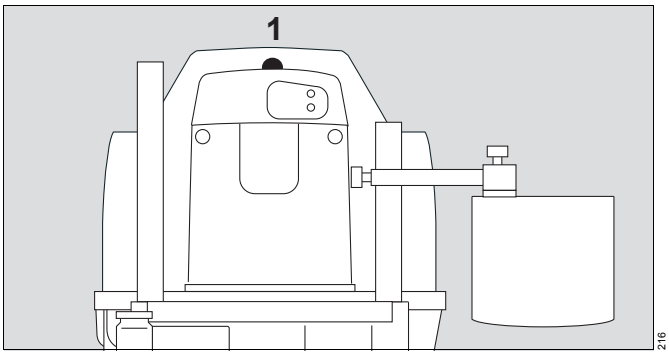


The alarm tone can be muted for 5 minutes:

**4** Suppress alarm tone = press key.

or

**5** Press the rotary knob.
– The warning message remains on the screen,
– The intermittent alarm tone is muted,
**1** The central alarm indicator goes out,
**2** The measured value continues to flash,
**3** Yellow bar LED continues to flash.

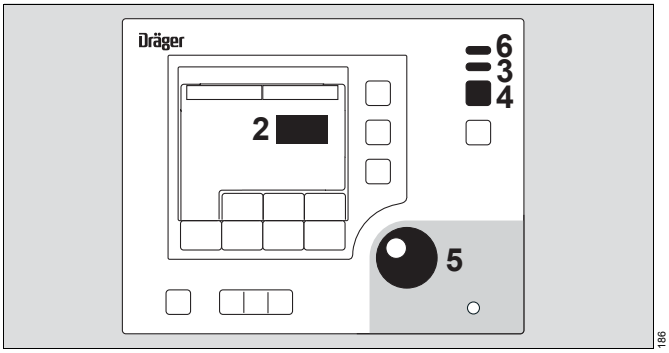


If the measured value is in the range ±*0.5* °*C* again:

– The warning message disappears,
– The intermittent alarm tone is muted,
**1** The central alarm indicator goes out,
**2** The measured value remains on-screen but does not flash,
**3** Yellow bar LED goes out. If the extended set value range is used the yellow bar LED will light up.

If the sensor plug is disconnected:
After 3 seconds:

– The alarm message appears on the screen.
  »**Connect skin temperature sensor 1**«.
– The alarm tone sequence (5 beeps) is sounded,
**1** The central alarm indicator lights up**,
**2** 3 flashing dashes are displayed in place of a temperature reading,
**6** Red bar LED flashes.

Then:

- Immediately plug in the sensor.

---

* The *numerical values* in this description are examples. See "Setting alarms" on page 84.
** The central alarm indicator can be switched off.
See "Setting system parameters" on page 83.

**WARNING**

**If the skin temperature sensor is not inserted or if it is defective, Caleo does not warm up as long 3 dashes are displayed on the screen. Danger of hypothermia for the patient.**

**Inserting or replacing the skin temperature sensor.**

If the sensor is defective:

– The alarm message appears on the screen.
  »**Skin temperature sensor 1 error**«.
– The intermittent alarm tone sequence (5 beeps) is sounded,
– The central alarm indicator lights up*,

**1** 3 flashing dashes are displayed in place of a temperature reading,

**2** Red bar LED flashes.

Then:

● Change the skin temperature sensor.

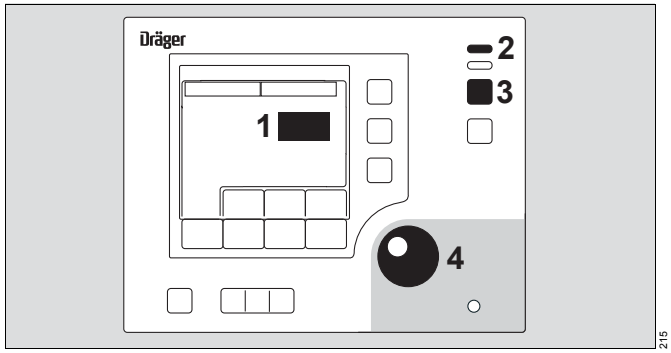


The alarm tone can be muted for 5 minutes:

**3** Suppress intermittent alarm tone = press key

or

**4** Press the rotary knob.

– The warning message remains on the screen,
– The intermittent alarm tone is muted,
– The central alarm indicator goes out,

**1** 3 dashes continue flashing,

**2** Red bar LED continues to flash.

Other alarms, see "Message – Cause – Remedy" on page 112.
See "Alarm descriptions" on page 138.

* The central alarm indicator can be switched off.
See "Setting system parameters" on page 83.

## Using humidity control*

- Connect the humidifier system
  (see "Using humidifier systems" on page 28).

**1** Set humidity control = press key.

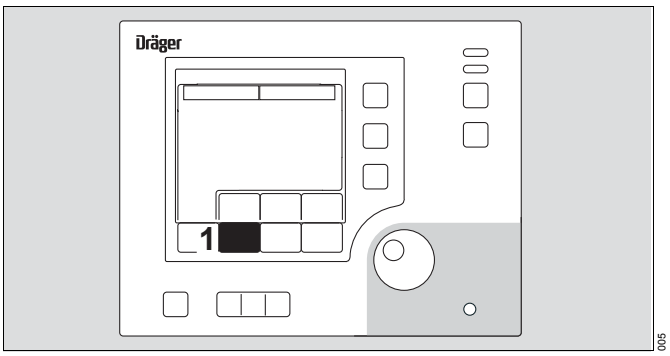


– The actual value and the current set value of the humidity control are displayed as bar graphs and numerical values.

Soft key assignments:

**2** ↩ = Do not activate new settings.

**3** off = Switch off humidity control.

**4** manual = Activate manual humidity control mode.

**5** auto = Automatic humidity control mode activated (see page 135).

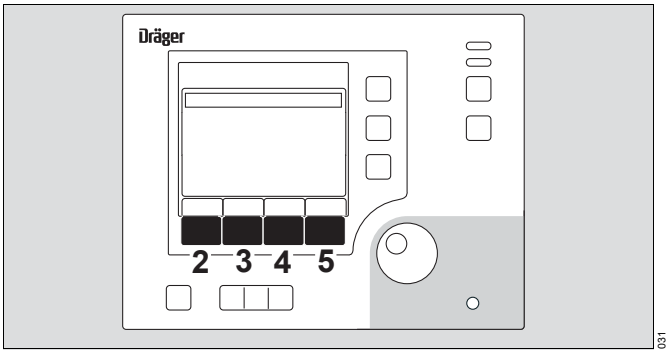


– On activating the humidity control, AUTO humidity is proposed as default.

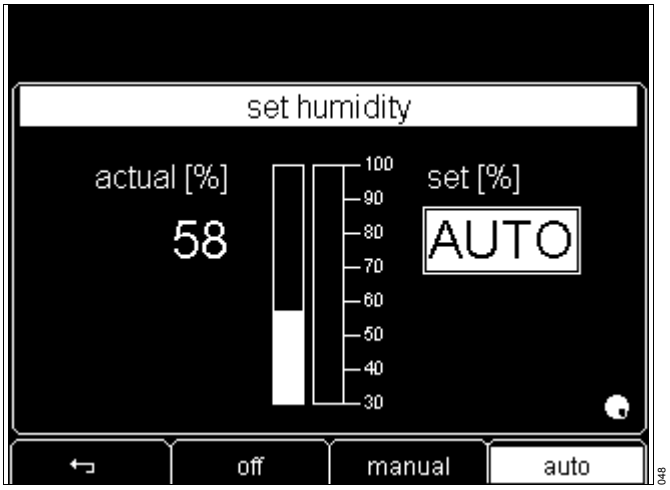


* optional equipment feature

**Setting AUTO humidity**

In AUTO humidity, the humidity setpoint is automatically calculated and set by the system as a function of the air temperature setting (see page 135).
The maximum relative humidity is 75 %, depending on the ambient temperature and incubator air temperature.

**1** Switch humidity control over to AUTO humidity = press key.
**2** Activate AUTO humidity = press the rotary knob.

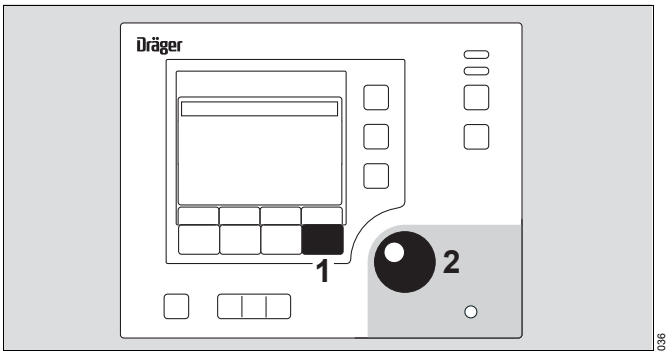


– The display returns to the standard screen. The measured value and the automatic set value are displayed.

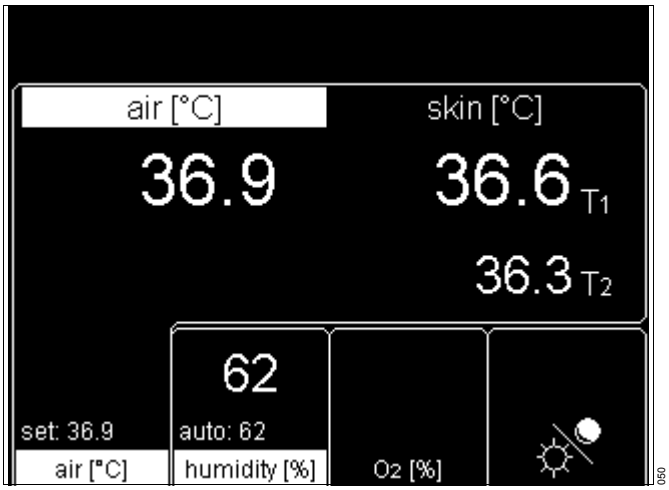


**Manually adjusting the set value**

Standard set value range 30 % to 99 %

**3** Switch humidity control over to manual mode = press key.
**4** Increase set value = turn rotary knob clockwise.
**4** Reduce set value = turn rotary knob anti-clockwise.
**4** Confirm set value = press rotary knob.

**NOTE**
At high air temperatures or low ambient humidity, the attainable humidity level in Caleo® is reduced.
The maximum attainable humidity level depends on the air temperature and ambient humidity.

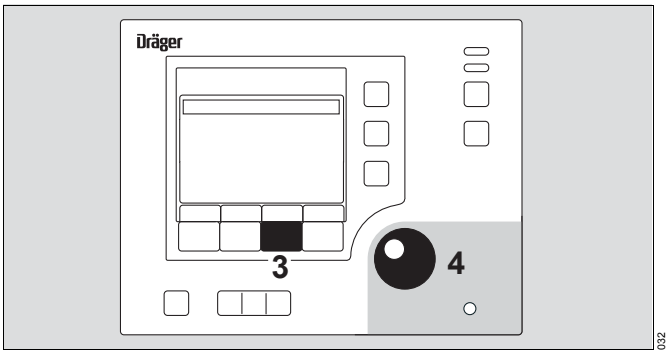

– The actual value and the current set value of the humidity control are displayed as bar graphs and numerical values.

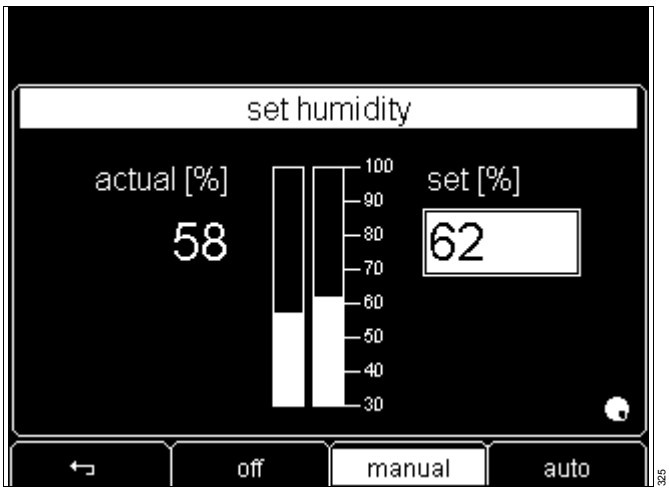


– The display returns to the standard screen. The actual measured values and the set values are displayed.

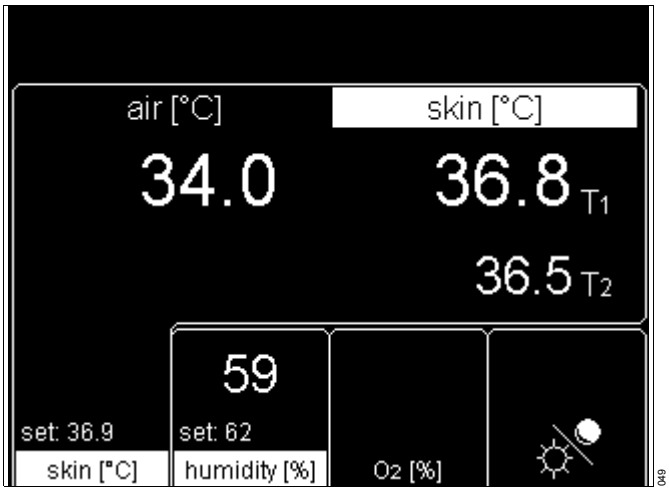

**Alarms**

**In the event of water shortage**

– The alarm message appears on the screen.
  »**Water tank is empty, please refill**«,
– The alarm tone sequence (3 beeps) is sounded,
– The central alarm indicator lights up*,
**1** The measured value flashes,
**2** Yellow bar LED flashes.

Replace the water bag or top up the water tank to the full level marking: see page 28.

The intermittent alarm tone sequence can be muted for 15 minutes:

**3** Suppress intermittent alarm tone = press key

or

**4** Press the rotary knob.
– The warning message remains on the screen,
– The intermittent alarm tone is muted,
– The central alarm indicator goes out,
**1** The measured value continues to flash,
**2** Yellow bar LED continues to flash.

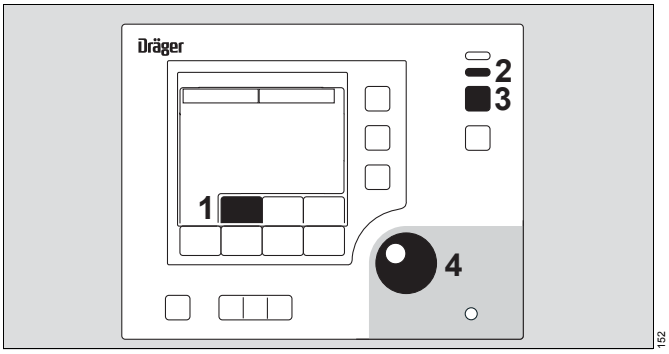


When the cause of the alarm has been remedied,
– The warning message disappears,
– The intermittent alarm tone is muted,
– The central alarm indicator goes out,
**1** The measured value remains on-screen but does not flash,
**2** Yellow bar LED goes out.
  If an extended set value range is used the yellow bar LED will light up.

Other alarms, see "Message – Cause – Remedy" on page 112.
See "Alarm descriptions" on page 138.

* The central alarm indicator can be switched off.
See "Setting system parameters" on page 83.

## Using $O_2$- control*

**WARNING**
**Risk to patient due to hyperoxemia (possibility of damage to the eyes) or hypoxemia (possibility of brain damage) from $O_2$ therapy. The air in the incubator should only be enriched with $O_2$ when prescribed by a doctor. Oxygen is classified as a drug. $O_2$ enrichment must be controlled on the basis of measured $O_2$ saturation in the patient's blood or $SaO_2$ or $SpO_2$). Otherwise, there is a danger of hyperoxemia (possibility of damage to the eyes) or hypoxemia (possibility of brain damage).**

- Connect the probe of the $O_2$ hose to the outlet of the central medical gas pipeline supply (page 19).

**1** Set $O_2$ control = press key.

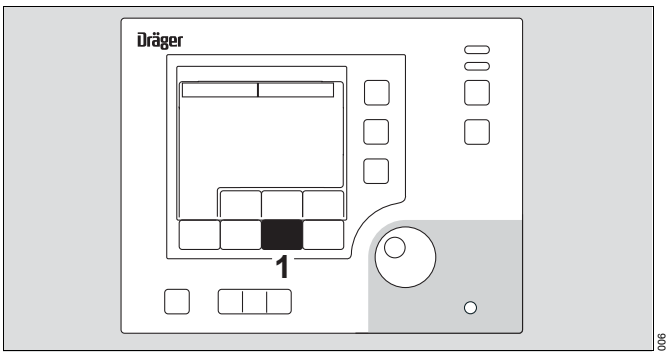


– The actual value and the current set value of the $O_2$ control are displayed as bar graphs and numerical values.

Soft Key assignments:

**2** ↩ = Do not activate new settings.

**3** off = Switch off $O_2$ control.

**4** on = Switch on $O_2$ control.

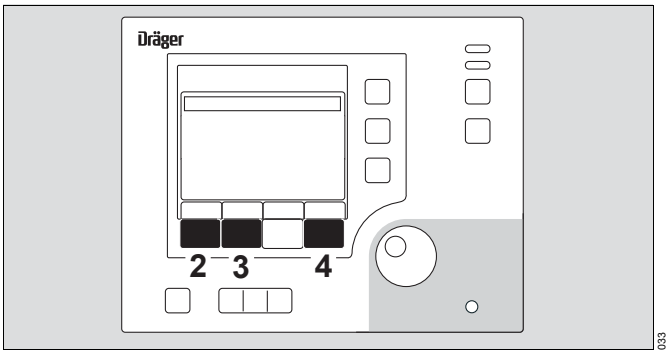


– After switching on the device, the oxygen sensors need a warm-up phase of at least 3 minutes. An hourglass symbol appears on the screen.
– The following message is displayed at the top of the screen: »set value with rotary knob«.
– After confirming the selected set value for $O_2$ and after completion of the warm-up phase, the automatic $O_2$ control is activated.

The current measured value is displayed after completing the warm-up phase.

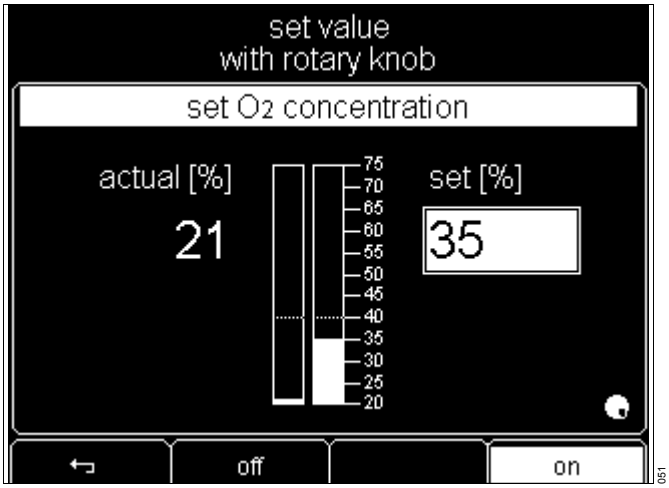


* optional equipment feature

**Adjusting the set value**

| | |
|---|---|
| Standard set value range | 21 Vol.% to 40 Vol.% |
| Extended set value range | 40.1 Vol.% to 75 Vol.% |
| Default setting | 21 % |

**1** Increase set value = turn rotary knob clockwise.
**1** Decrease set value = turn rotary knob counter-clockwise.
**1** Confirm set value = press rotary knob.

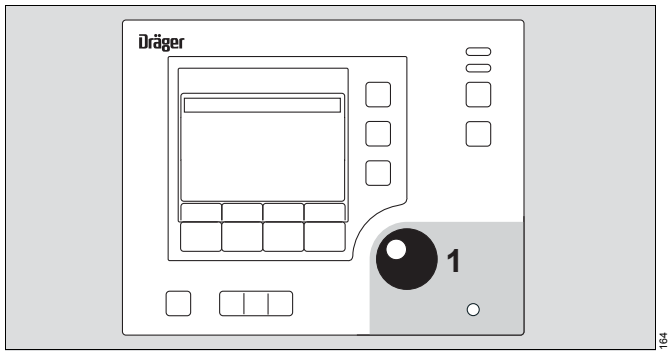


– The display returns to the standard screen. The actual measured values and the set values are displayed.

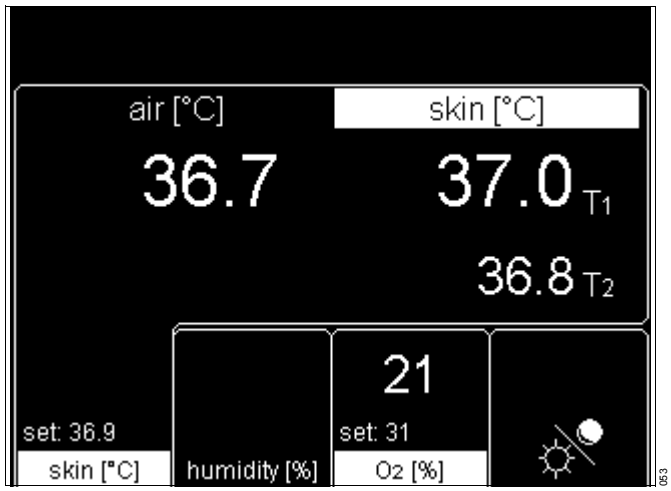


**WARNING**
**Physiological risk to patient due to increased $O_2$ supply. When making treatment decisions pay attention to physiological risks from $O_2$.**

**If the set value exceeds the standard set value range**

– The following message appears in the upper section of the screen.
»confirm the extended range with the rotary knob«.

- Confirm the extended set value range = press the rotary knob.
- Continue increasing the set value = turn the rotary knob clockwise.

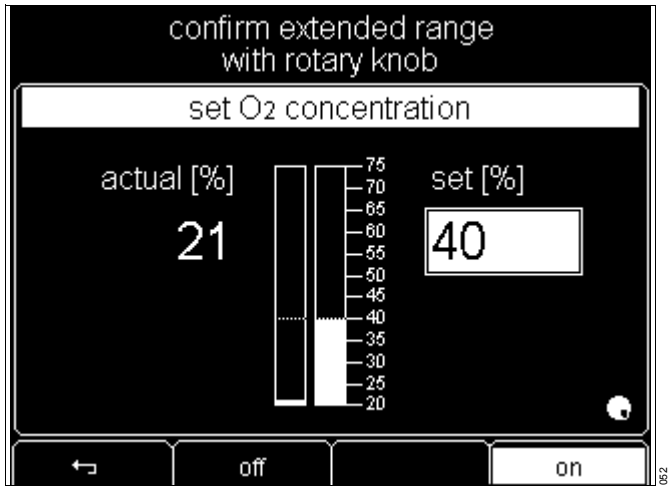

– The message »⚠ >40 %« appears on the screen.
– The following message appears in the upper section of the screen.
»set value with rotary knob«

● Confirm the set value = press the rotary knob.

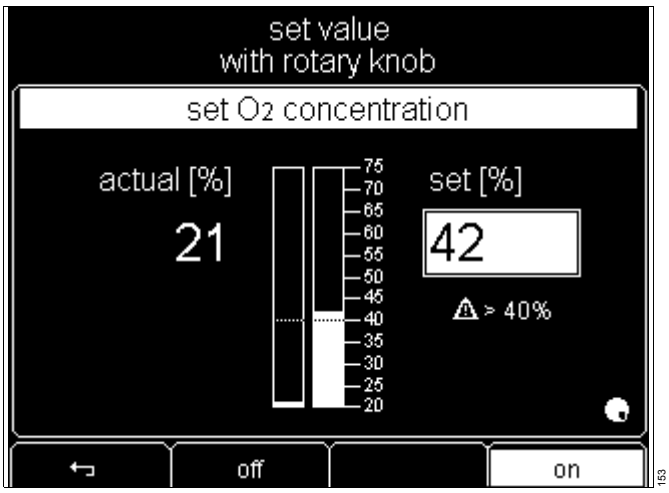


– The display returns to the standard screen. The measured values are displayed.
– The adjusted set value and »set: >40 ⚠« are displayed alternately.
– The yellow bar LED lights up.
If the yellow bar LED flashes, the set value has been increased by more than 3 % or 5 %, see page 65, or other alarms are active.

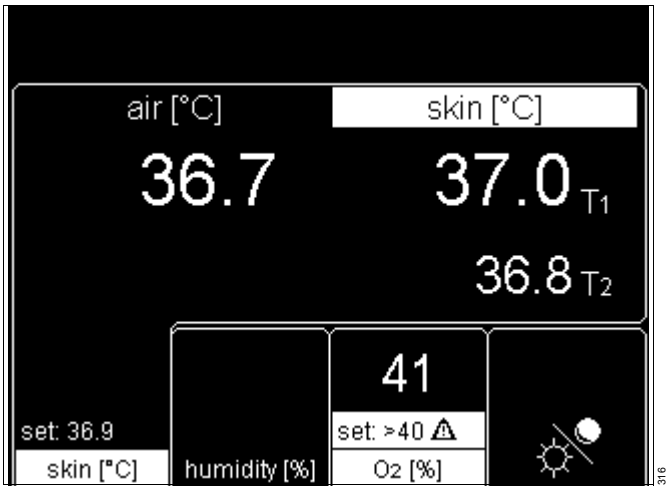

**Alarms**

Alarm limits can be changed in the configuration (page 85).

If the deviation between the set and measured $O_2$ concentration is more than *±5 %*[*]:

– The alarm message appears on the screen.
  »**$O_2$ deviation more than** *5 %*«,
– The alarm tone sequence (5 beeps) is sounded,
– The central alarm indicator lights up[**],
**1** The measured value flashes,
**2** Red bar LED flashes.

The intermittent alarm tone sequence can be muted for 2 minutes:

**3** Suppress intermittent alarm tone = press key.
or
**4** Press the rotary knob.
– The warning message remains on the screen,
– The intermittent alarm tone is muted,
– The central alarm indicator goes out,
**1** The measured value continues to flash,
**2** Red bar LED continues to flash.

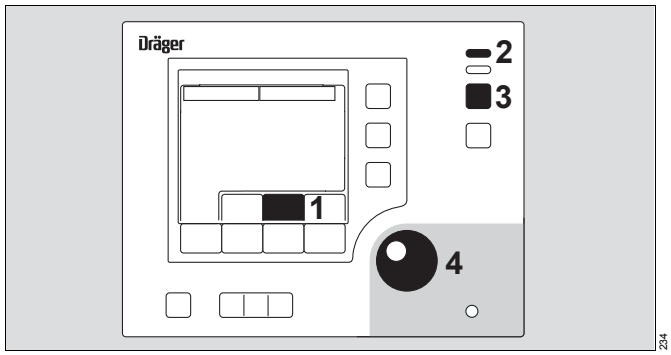


When the measured value returns within the range *±5 Vol.%*:

– The warning message disappears,
– The intermittent alarm tone is muted,
– The central alarm indicator goes out,
**1** The measured value remains on-screen but does not flash,
**2** Red bar LED goes out.

For other alarm descriptions, see "Message – Cause – Remedy" on page 112.
See "Alarm descriptions" on page 138.

---

* The *numerical values* in this description are examples. See "Setting alarms" on page 84.
** The central alarm indicator can be switched off. See "Setting system parameters" on page 83.

## Using "Day and Night"

With Day and Night, the screen can be displayed at four different brightness levels.
On starting up the device, the screen is displayed with maximum brightness.
After restarting the device, e.g. after a power failure, the screen is displayed in the last selected mode.

– The soft key for Day and Night is designated on the standard screen by the symbol .

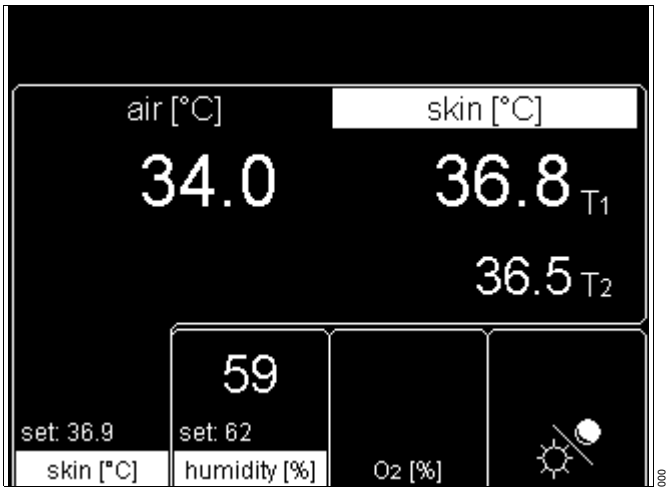


**1** To set the screen brightness = press the key repeatedly until the desired brightness is obtained.

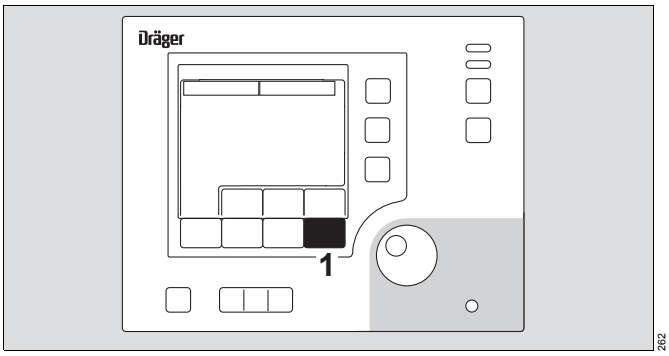

## Selecting menus

**1** Select menu = press the »menu« key.

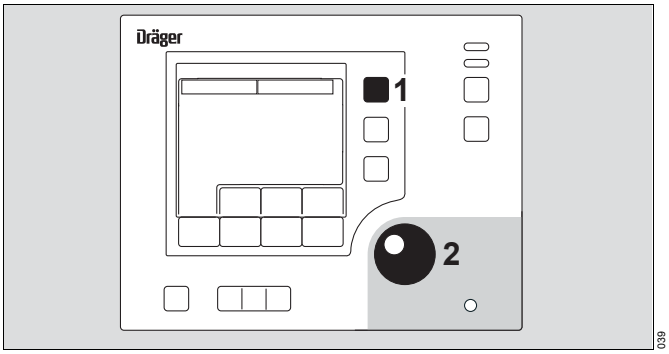


The required mode can be selected from the menu displayed:

**2** Select item = turn the rotary knob.
**2** Confirm menu option = press the rotary knob.

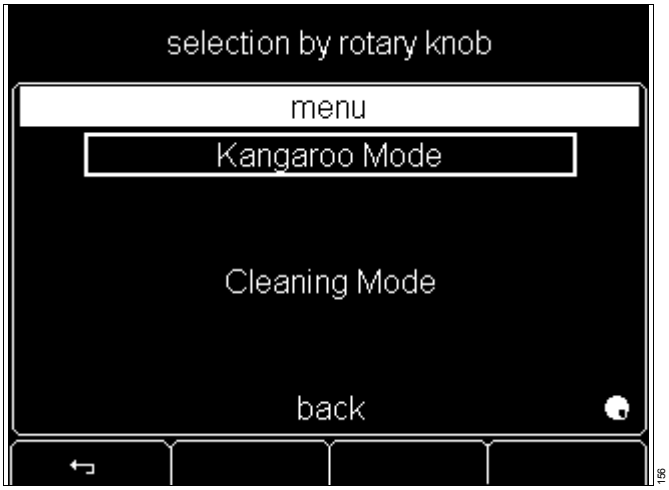


**Kangaroo mode**

See page 132 for a description of the Kangaroo mode.

**WARNING**
**Danger to patient of hypothermia or overheating.**
**The patient's core temperature must be monitored constantly as it is not part of the automatic temperature control.**
**Particular attention must be paid to vital parameters of critical patients.**

**CAUTION**
Hoses and cables that are not routed correctly and safely without obstruction can kink, tear or become squashed, risk of injury to patient.
Ensure that all hoses and cables are routed correctly and safely without obstruction!

**NOTE**
In Kangaroo mode the incubator is operated in air temperature control mode. Skin temperature sensors only serve to monitor the skin temperature of the patient. The alarm limits for monitoring must then be redefined.

The previously set values for
– Humidity (page 59) and
– $O_2$ (page 63) are retained in Kangaroo mode.
The previous set value for skin temperature control is stored in buffer memory.

**Activating Kangaroo mode**

**1** Open menu = press the »menu« key.

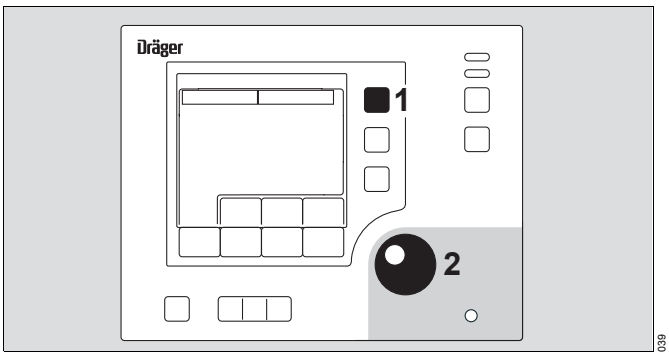


Select "Kangaroo mode" from the menu.

**2** Select item = turn the rotary knob.
**2** Activate item = press the rotary knob.

– The following message appears on the screen: »please confirm the new Kangaroo Mode with rotary knob«.

**2** Confirm Kangaroo mode = press the rotary knob.

– When activated, Kangaroo mode is highlighted on screen by a light background.
– The duration of Kangaroo mode can be displayed on the screen in minutes and seconds (mm:ss).

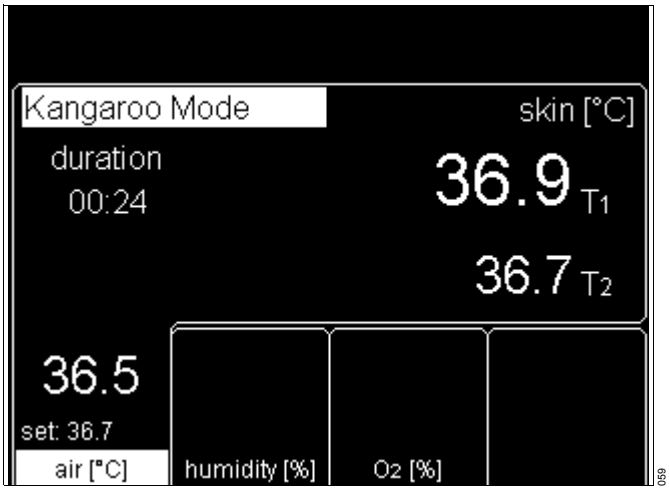


The alarm muting is automatically activated, i.e. for the next 4 minutes, the following alarms are displayed as "confirmed"
– Air temperature too low,
– Kangaroo alarms (see page 133),
– Humidity too low,
– $O_2$ concentration too low,
If the extended set value range is used (air or $O_2$) the yellow bar LED will light up.
See "Alarm suppression" on page 87.

● The tubing grommets can be removed from the pillar elements so that the hoses and cables remain well ordered during Kangaroo mode.

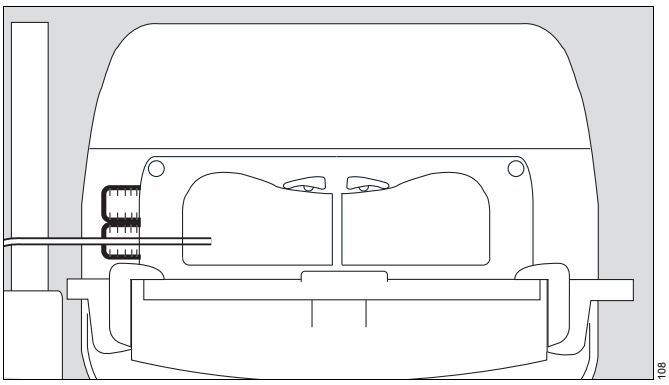

**Alarms**

Alarm limits can be changed in the configuration (page 84).

If the skin temperature of the yellow skin temperature sensor (skin 1) falls below the alarm limit set in the configuration:

– The screen displays the warning message »**Skin 1 temperature below** *36.0 °C*«*,
– The alarm tone sequence (3 beeps) is sounded,
**1** The central alarm indicator lights up**,
**2** The measured value flashes,
**3** Yellow bar LED flashes.

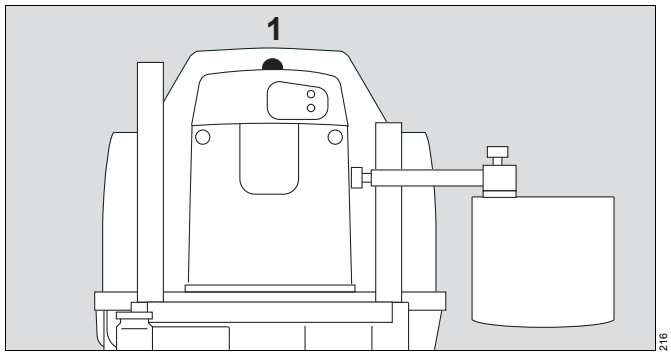


The intermittent alarm tone sequence can be muted for 15 minutes.
**4** Suppress intermittent alarm tone = press key.
or
**5** Press the rotary knob.
– The warning message remains on the screen,
– The intermittent alarm tone is muted,
**1** The central alarm indicator goes out,
**2** The measured value continues to flash,
**3** Yellow bar LED continues to flash.

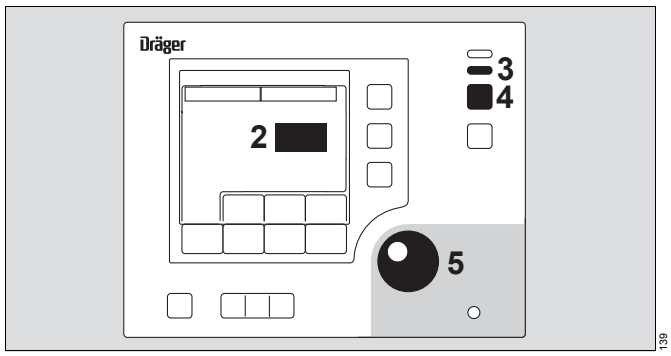


When the measured value returns above the alarm limit:
– The warning message disappears,
– The intermittent alarm tone is muted,
**1** The central alarm indicator goes out,
**2** The measured value remains on-screen but does not flash,
**3** Yellow bar LED goes out. If the extended set value range is used the yellow bar LED will light up.

Other alarms, see "Message – Cause – Remedy" on page 112.
See "Alarm descriptions" on page 138.

* The *numerical values* in this description are examples. See "Setting alarms" on page 84.
** The central alarm indicator can be switched off. See "Setting system parameters" on page 83.

**Ending Kangaroo mode**

**1** Open menu = press the »menu« key.

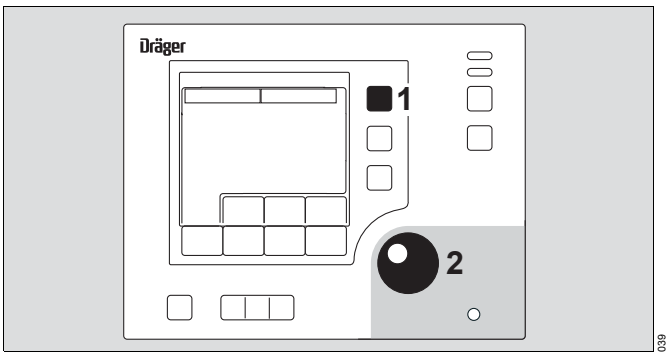


The following message is shown via the displayed menu selection:
»Return to *air* mode«* or
»Return to *skin* mode«.

**2** Select item = turn the rotary knob.
**2** Activate item = press the rotary knob.

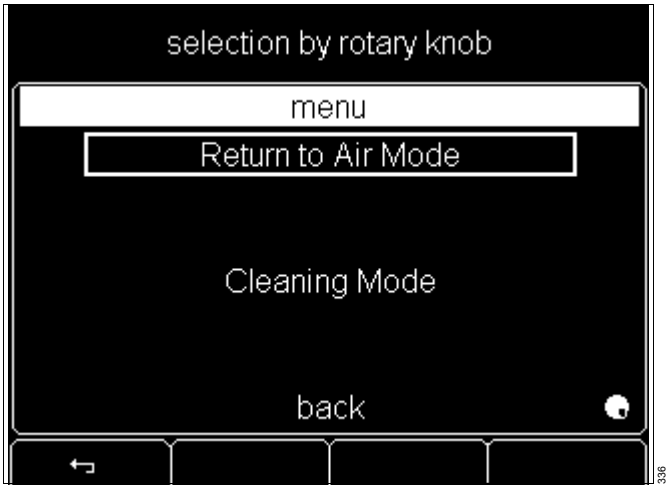


– The following advisory message appears on the screen: »To leave the Kangoroo mode and return to *Air* Mode confirm with the rotary knob.«

**2** Exit Kangaroo mode = press the rotary knob.

The former operating status with the previous set values is reactivated. The display returns to the standard screen.

After quitting Kangaroo mode, reinsert the tubing grommets in the pillar element.

● To maintain Kangaroo mode = press »↵« key.
or
– Wait for 7 seconds: 4 short beeps are emitted. Caleo® reminds the user to press the rotary knob. The display returns to the standard screen. The previous set value is retained.

---

* depending on the mode set earlier

**Trend display**

The trend screen is used for the graphical and numerical display of the measurement parameters. The data window always shows the last data in the selected time interval.
In addition, the current measured values and set values are numerically displayed.

**Switching over between standard/trend screen**

**1** Display trend = press » « key.

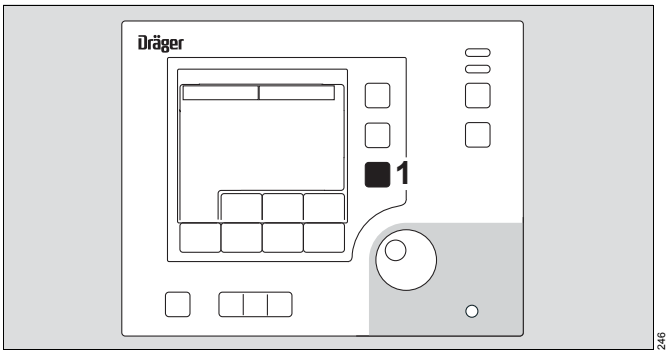


– The trend for the air temperature over the last 3 hours is displayed. The current air and skin temperature values are displayed on the right next to the trend.

– T1: Yellow skin temperature sensor (skin 1)
– T2: White peripheral sensor (skin 2)

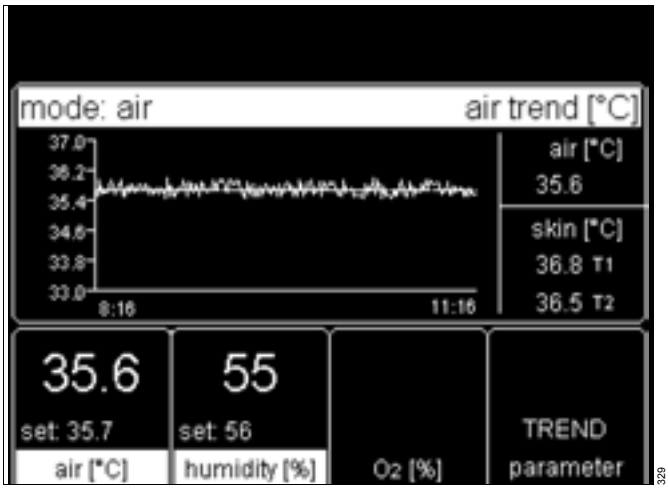


**2** Display menu = press »TREND parameter« key.

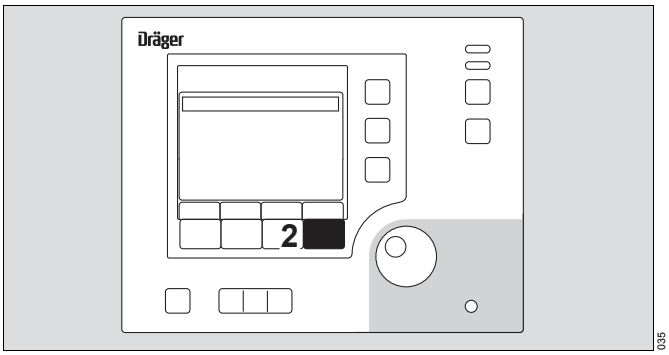

Select the desired trend from the displayed list.

Default values:
– Air temperature trend
– Zoom factor 3 hours

- Select trend = turn the rotary knob.
- Activate trend = press the rotary knob.

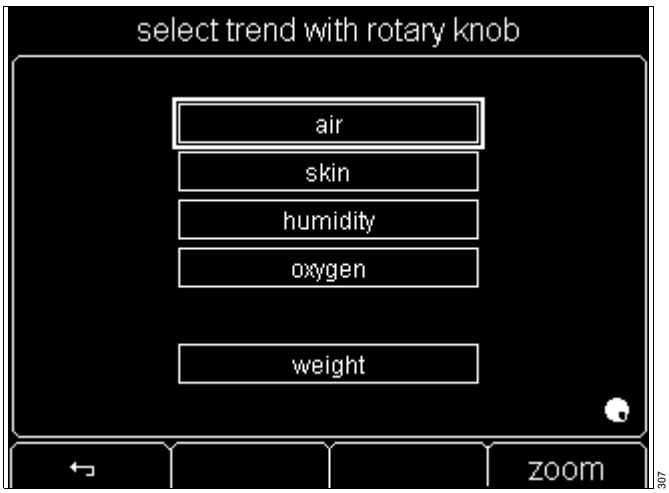


- Back to menu = press »↩« key.

- To exit trend display mode = press » 888 « key.

The display returns to the standard screen.

**Setting the time interval (Zoom)**

**1** Display menu = press »TREND parameter« key.

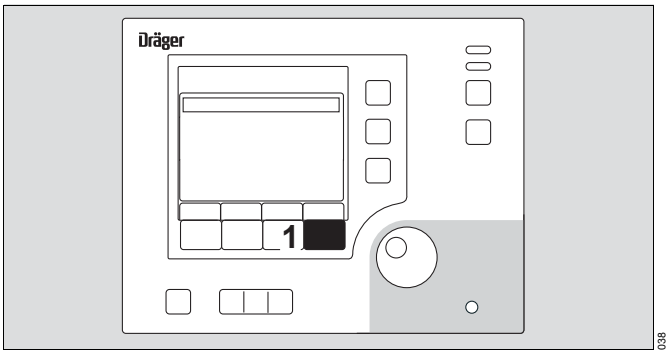


Select the desired trend from the displayed list.

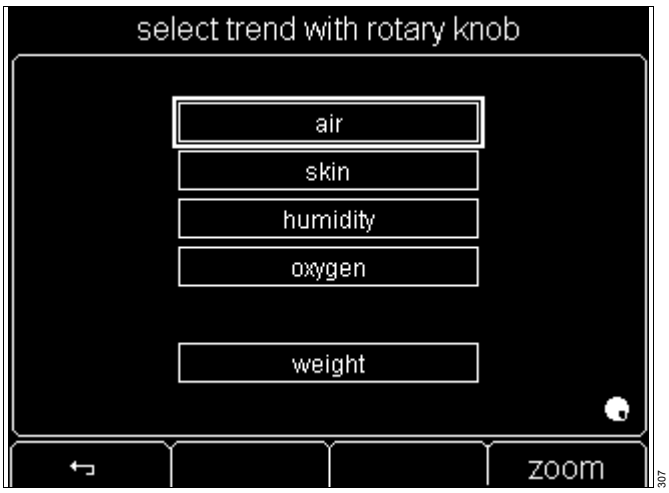


- Back to menu = press »↩« key.

**1** Display the time interval menu = press the »Zoom« key.

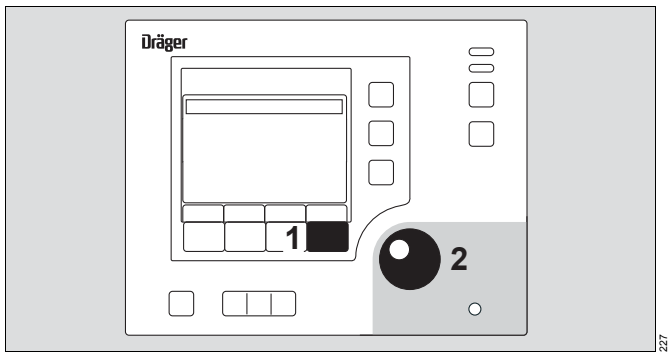


Select the desired zoom from the menu.

**2** Select zoom = turn the rotary knob.
**2** Activate zoom = press the rotary knob.

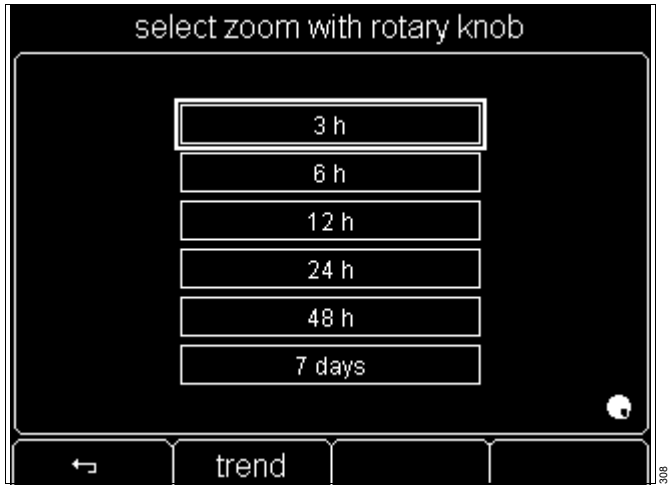


- Back to menu = press »↩« key.
- Return to trend selection = press the »trend« key.

– In the illustrated example, the trend for the air temperature over the last 3 hours will be displayed.

– T1: Yellow skin temperature sensor (skin 1)
– T2: White peripheral sensor (skin 2)

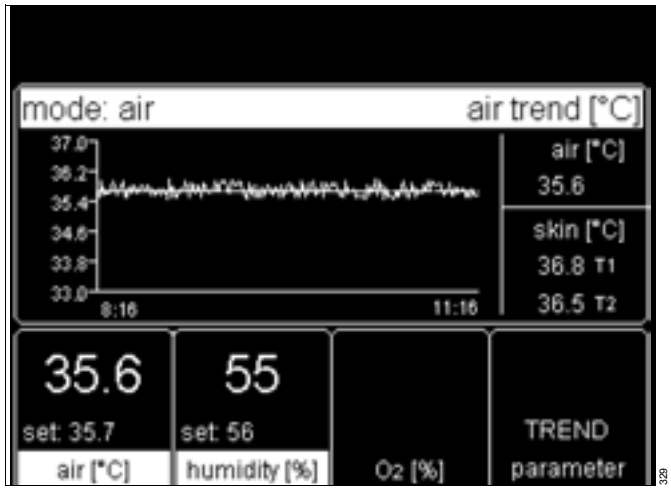

**Trend analysis**

Trend analysis is used for the graphical and numerical display of measurement parameters and their associated set values. The data window can be set to display any time interval within the last 7 days.

Trend analysis can therefore be used to evaluate thermo-monitoring data.

The following parameters can be set:

– Skin temperature 1 (yellow skin temperature (sensor, skin 1, T1)
– Peripheral temperature or skin temperature 2 (for twins) (white temperature sensor, skin 2, T2)
– Air temperature
– Humidity (rel. %)*
– $O_2$ concentration (Vol.%)*.

**NOTE**
While trend analysis is in progress, no current measured values (air, skin, etc.) are displayed. The numerical values displayed are values from past readings. After 2 minutes, the standard screen is displayed automatically.

**1** To activate trend analysis = hold down the key for 4 seconds.

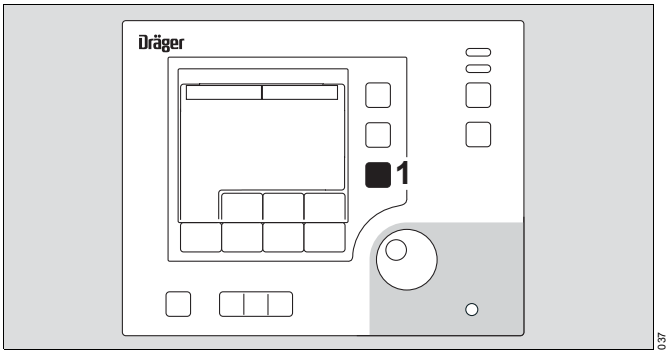


* optional equipment feature

– The trend graph for the selected measured value is displayed on the screen.

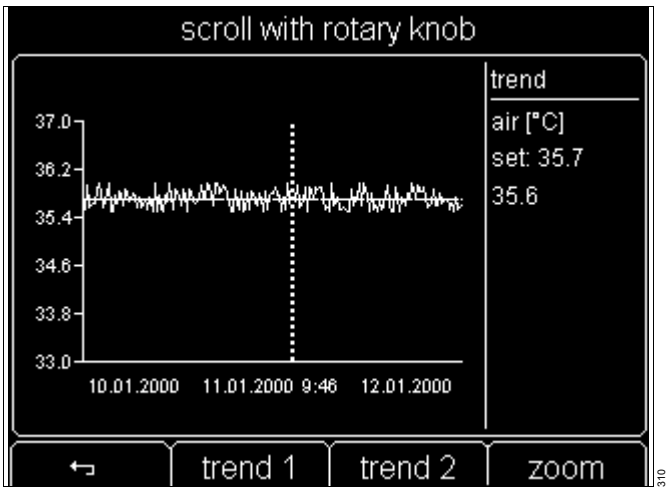


Default values:

| | |
|---|---|
| trend 1 | Skin temperature |
| trend 2 | Air temperature |
| zoom | 3 hours |

The selected value is displayed as a trend graph. In this graph, the trend curve of the measured value is overlaid on the corresponding set value curve.

Time cursor:
The time cursor is displayed as a vertical dotted line marking a precise point of time on the graph's time axis.

- To move the time curve on the time scale = turn the rotary knob.

The time marked by the cursor line is specified underneath the dotted line by the date and time. The start time and end time of the current time range are specified to the right and left underneath the trend graph.
If the time cursor is moved beyond the displayed time range, the screen adapts automatically and displays the relevant time range:
- Less recent time range = turn the rotary knob counter-clockwise.
- More recent time range = turn the rotary knob clockwise.

Data window:
The time cursor is associated with a data window situated to the right of the displayed trend. This data window shows the numerical values valid at the time marked on the time axis by the time cursor.

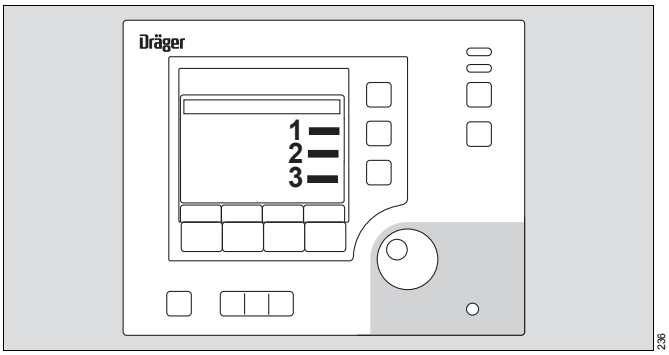


The following values are displayed in the data window:
**1** Name of the selected parameter
**2** Set value of this parameter at the marked time
**3** Measured value at the marked time

**Trend selection**

A trend graph can be selected with the soft keys.

Soft Key assignments:

**1** ↩ = Cancel. New settings will not be activated.

**2** trend 1 = Select trend 1.

**3** trend 2 = Select trend 2.

**4** zoom = Select time interval.

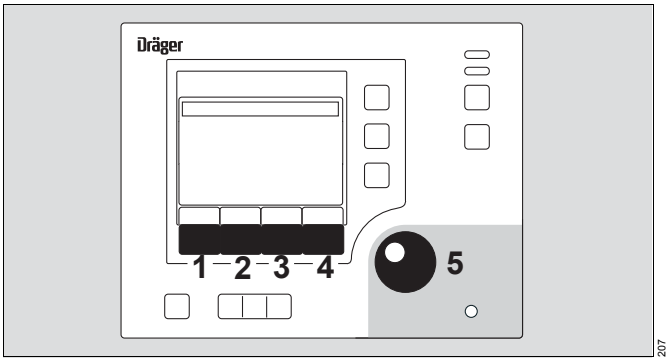


Select trend 1:

**2** Display the trend 1 menu = press soft key.

The following parameters can be selected as "trend 1":

– air
– skin
– humidity*
– $O_2$*
– weight*

**5** Select trend 1 = turn rotary knob.

**5** Confirm (activate) selection = press rotary knob.

The newly selected trend will be displayed on the screen.

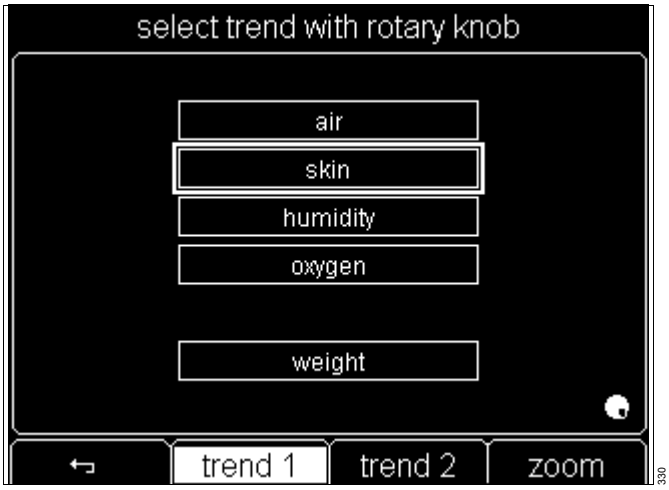


Select trend 2:

**3** Open trend 2 menu = press the key.

The following parameters can be selected as "trend 2":

– air
– humidity*
– $O_2$*
– weight*
– disable

**5** Select trend 2 = turn rotary knob.

**5** Confirm (activate) selection = press rotary knob.

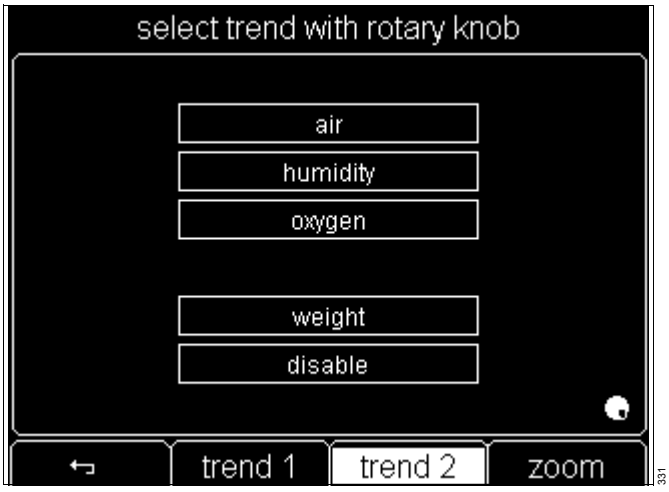


* optional equipment feature

The newly selected trend 2 is displayed on the screen under trend 1. In addition, a second data window containing the relevant parameters is opened next to trend 2.
The time cursor and time range (zoom) are identical for both trend displays.
The »disable« option removes trend 2 from the screen, so that only trend 1 is displayed.

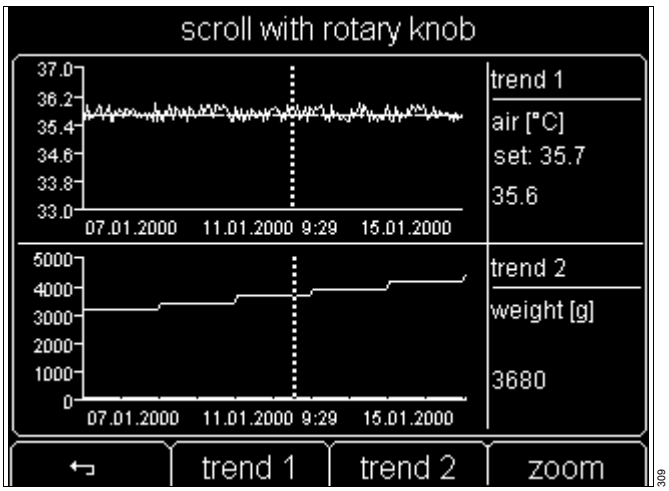


**Selecting the time interval (zoom)**

**1** Open the Zoom menu = press soft key.

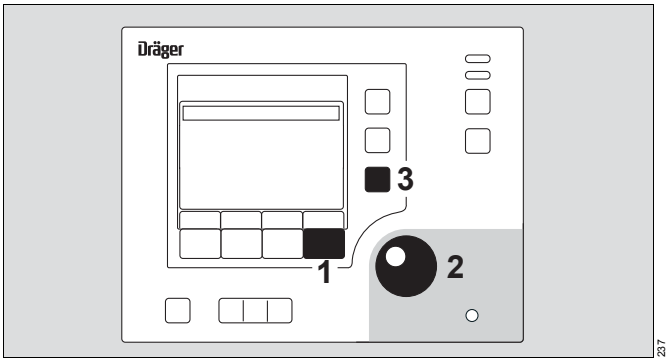


The following intervals of time can be selected for the time range (zoom) function:
3; 6; 12; 24; 48 hours or 7 days.

**2** Select zoom = Turn rotary knob.
**2** Activate zoom = Press rotary knob.

The selected trends will then be displayed in the newly selected time range.

All data going back a maximum of 7 days can be displayed. The individual measuring points together with the associated data are displayed as average values in the data window.
When displaying the measured weight values, up to 30 values can be stored and displayed as a trend. Values between the individual measured values are interpolated.

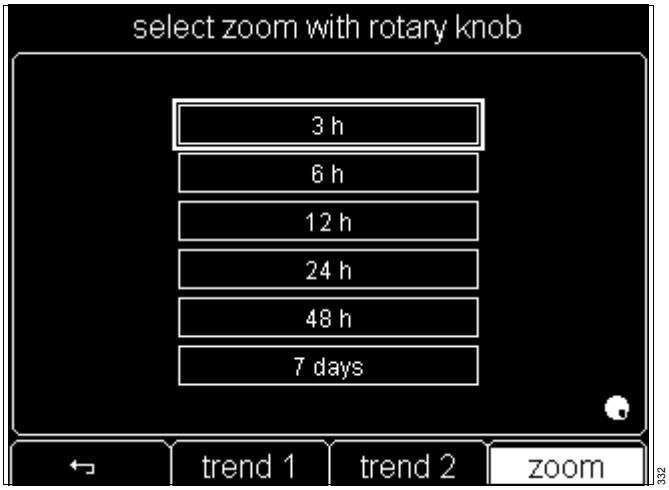


**Ending trend analysis**

To exit trend analysis

- Back to menu = press »↩« key.

or

**3** Terminate trend analysis = press key

or

if no soft key on the screen is pressed for 2 minutes,
the display will automatically revert to the standard screen.

**Cleaning Mode***

**NOTE**
Cleaning mode is only available if Caleo® is equipped with humidity control.

**WARNING**
**Danger to patient of overheating.**
**Cleaning mode may only be used if Caleo® is empty.**

**NOTE**
Only use cleaning mode with an ambient humidity of >10 % relative humidity.

**NOTE**
Close the clamp on the transfer set before starting the cleaning mode.

**NOTE**
Cleaning mode takes approx. 60 minutes.
The water heater is heated up during cleaning mode. The residue water evaporates. The water heater then cools down.

**NOTE**
During cleaning mode Caleo® continues to measure the relative humidity. The value will not be displayed. If the relative humidity falls below 10 % the "Humidity sensor faulty" alarm will be triggered. Cleaning mode cannot be ended in the correct manner. In order to maintain a relative humidity of >10 %, the front and side flaps and the canopy should be open during cleaning mode.

**CAUTION**
Risk of slipping due to moisture under the Caleo.
During or after the Cleaning mode, condensation could form under the housing of the Caleo®.

**1** Open menu = press the »menu« key.

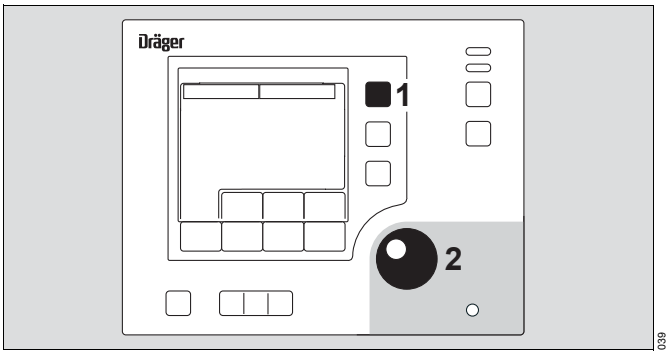


* optional equipment feature

Select "Cleaning Mode" from the displayed menu.

**2** Select item = turn the rotary knob.
**2** Confirm (activate) item = press the rotary knob.

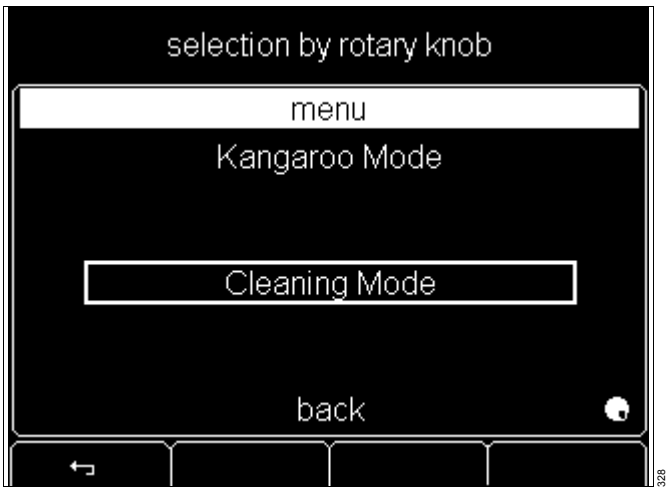


– The operating steps to be performed are specified on the screen:
»disconnect Luerlock connector from apparatus
make sure that no patient is inside
start Cleaning Mode by
pressing both ▼▼▼▼ keys«.

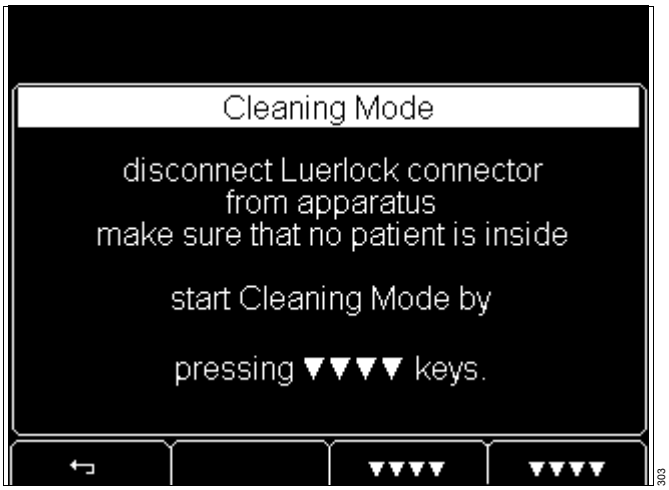


- Start Cleaning Mode = press both soft keys simultaneously.

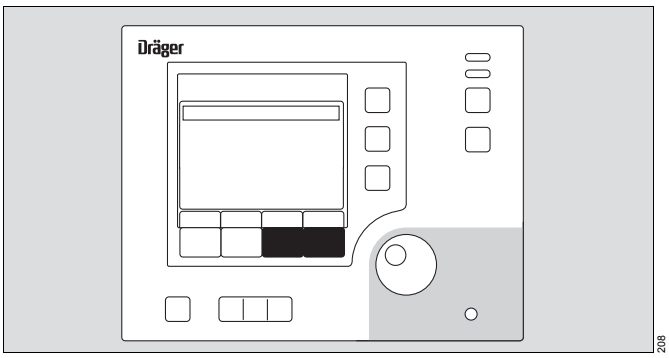

The water heater is boiled dry. The heater is then cooled.

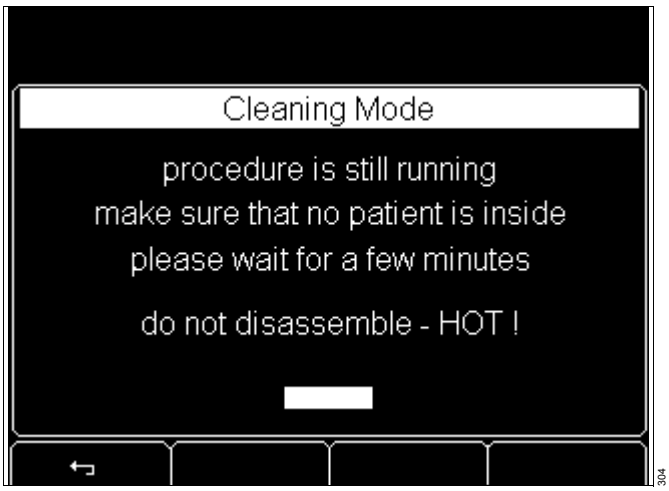


**WARNING**
**Risk of burning from the heater! Parts of the humidifier are heated to 100 °C.**
**Do not disassemble Caleo® during cleaning mode.**

– The screen indicates when cleaning mode is complete.

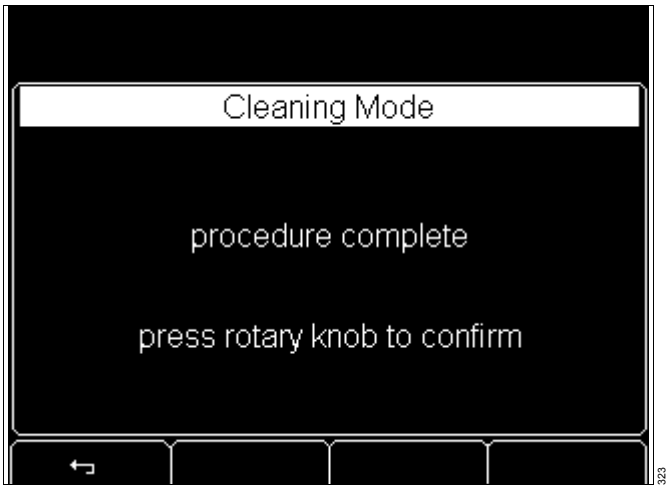


- Confirm end of cleaning mode = press rotary knob.

Caleo® performs a restart.

After ending cleaning mode:
– Disinfect and clean Caleo® (see "Cleaning, disinfecting and sterilizing" on page 94).

## Configuration

In configuration mode, you can set
– Language, date and time
– System parameters and
– Alarm parameters
and
you can obtain information on
– $O_2$ sensors and
– the software version.

### Activating configuration mode

**1** Activate configuration mode = hold down the »menu« key for 4 seconds.

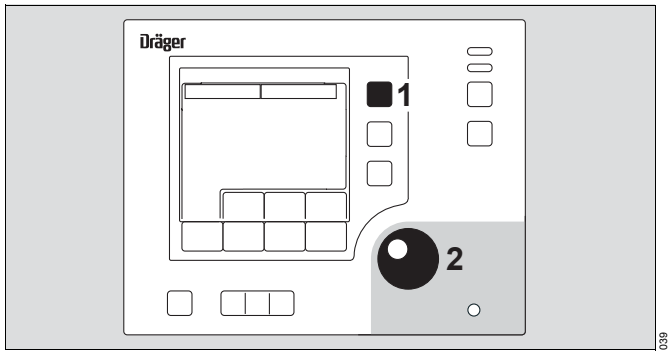


The individual parameters of the configuration can now be selected.

**2** Select configuration parameters = turn the rotary knob.
**2** Activate the configuration parameters = press the rotary knob.

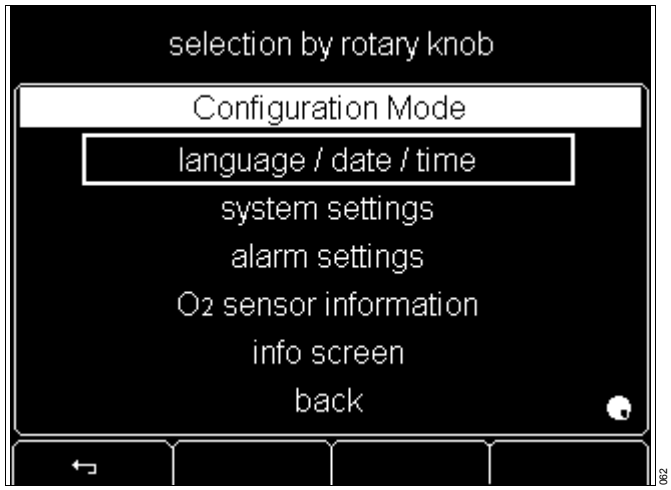


- Cancel selection = press » ↩ « key.
– The display returns to the standard screen.

**Language/date/time**

**1** Select language/date/time = turn and press the rotary knob.

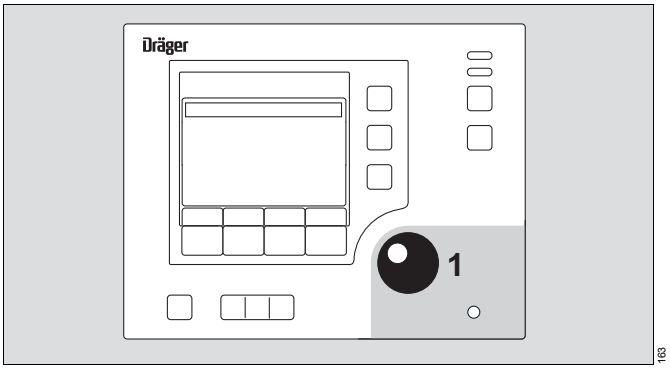


– The language selection box is highlighted by a bright border.

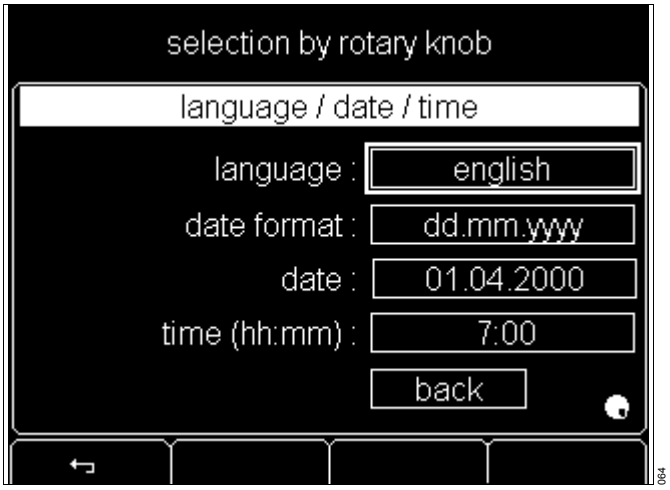


**1** Select language = turn the rotary knob.
**1** Confirm language = press the rotary knob.

– The selected language is displayed on the screen.

Follow the same procedure to set the date format, date and time.

**1** Save settings = turn the rotary knob to »back« and then press the control key.

● Cancel selection = press »↵« key.

– The display returns to the configuration parameter menu (see page 81).

**Setting system parameters**

**1** Select the temperature unit = turn and press the rotary knob.

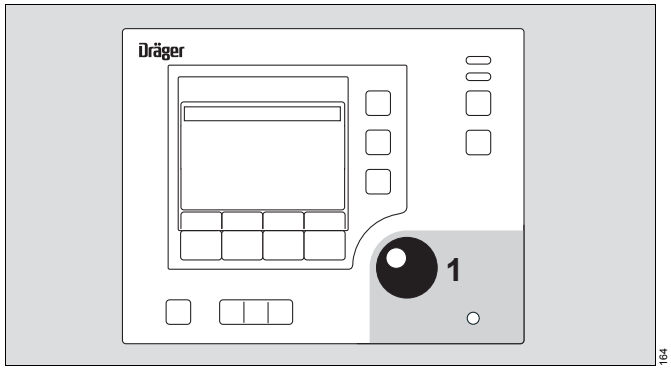


– The temperature unit is highlighted by a light background.

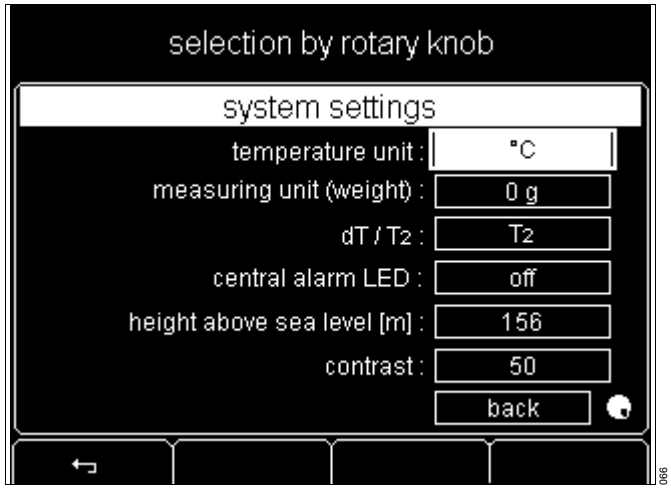


**1** Select unit = turn the rotary knob.
**1** Confirm unit = press the rotary knob.

– The selected unit is displayed on the screen.

The weight unit, the dT/T2 display, the central alarm indicator, the height above sea level *and the contrast are set in the same way.

– The weight unit can only be set if the weighing scale is integrated in Caleo®.
– If using 2 skin temperature sensors, the screen can display T1 and either T2 or the difference between T1 and T2 (dT).
– When the central alarm indicator is deactivated, alarm situations are only indicated by the flashing measured value, the flashing bar LED on the control unit and the alarm signal.
– It is only possible to set the height above sea level* if automatic O2 control is integrated in Caleo®. An incorrectly specified height above sea level reduces the measurement accuracy of the O2 sensors (e.g. 1.5 % additional error in 1000 m height difference).
– If the screen is difficult to read the contrast settings can be adjusted.

● Cancel selection = press » ↩ « key.
– The display returns to the configuration parameter menu (see page 81).

* Height above mean sea level

**Setting alarms**

**1** Select alarms = turn and push the rotary knob.

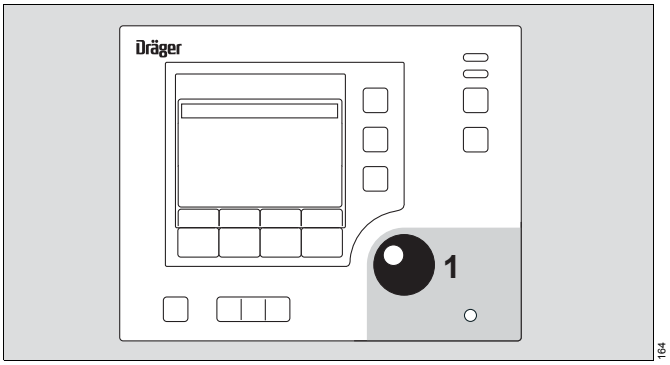


– The displayed menu can be used to select the alarms for the Kangaroo mode, the initial volume of the audible alarms and the alarm limits for temperature control and $O_2$ control.

**1** Select menu item = turn rotary knob.
**1** Confirm menu item = press rotary knob.

● Cancel selection = press »↩« key.
– The display returns to the configuration parameter menu (see page 81).

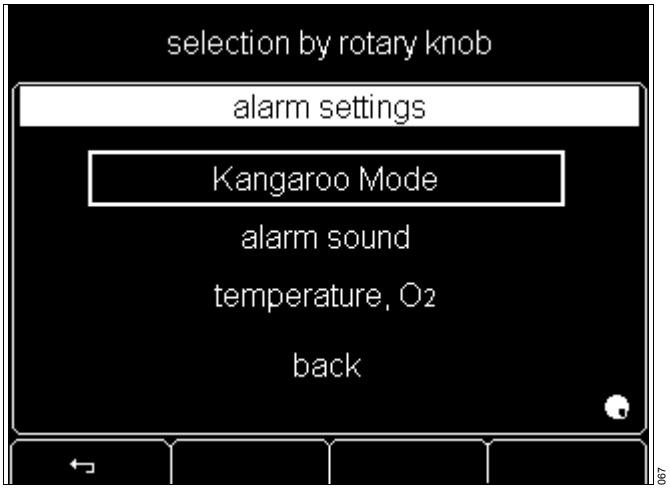


**Kangaroo mode**

Adjustment ranges:

| | |
|---|---|
| Skin alarm T1 min | 33 °C to 37 °C and off |
| Skin alarm T2 min | 33 °C to 37 °C and off |
| dT alarm min | –2 °C to 2 °C and off |
| dT alarm max | 2 °C to 5 °C and off |
| Default: | Same as last setting |

The *text* items in the description that follows are examples:
**1** Select skin alarm *T1 min* (lower alarm limit for skin temperature) = turn and press the rotary knob.
– The *T1 min* alarm selection box is highlighted by a bright border.
**1** Select alarm = turn the rotary knob.
**1** Confirm alarm = press the rotary knob.
The display returns to the alarm settings menu (see page 84).

The other alarms are set by the same method.

● Cancel selection = press »↩« key.
– The display returns to the configuration parameter menu (see page 81).
For a description of Kangaroo mode alarms please refer to page 133.

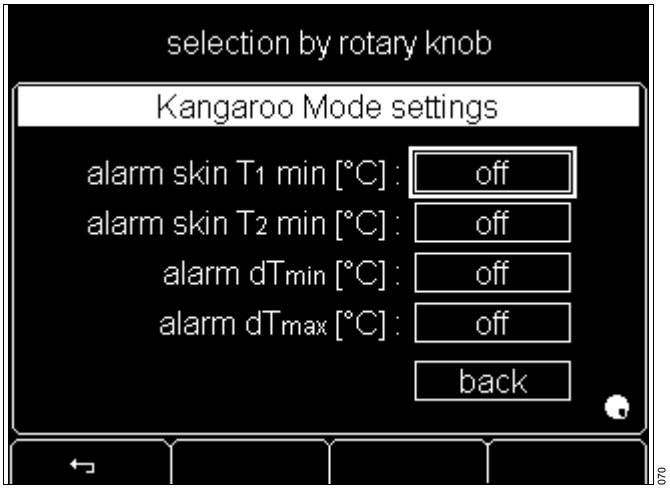

**Initial sound volume of the alarms:**

| | |
|---|---|
| Adjustment range: | 1 to 8 |
| Default: | 1 |

– The initial sound volume is highlighted by a light background.

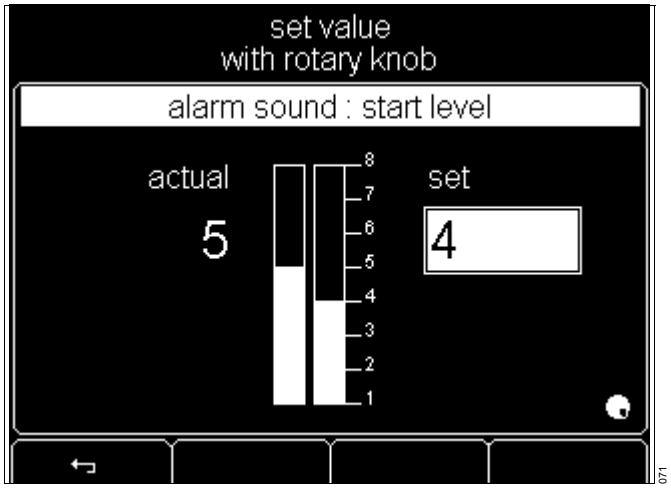


- Set an initial sound volume = turn rotary knob.
- Confirm initial sound volume = press rotary knob.

The display returns to the alarm settings menu (see page 84).

- Cancel selection = press »↩« key.

– The display returns to the configuration parameter menu (see page 81).

**Alarm limits**

Adjustment ranges:

| | |
|---|---|
| Air temperature deviation | –1.5 or –2.5 °C |
| Skin temperature deviation | ±0.3 to 1.0 °C |
| $O_2$ deviation* | ±3 % or ±5 % |

Default values:

| | |
|---|---|
| Air temperature deviation | –1.5 °C |
| Skin temperature deviation | ±0.5 °C |
| $O_2$ deviation* | ±5 % |

- Select the alarm limit for air/skin temperature and $O_2$* = turn and press the rotary knob.

– The alarm limit setting for the deviation in air temperature is highlighted by a bright border.

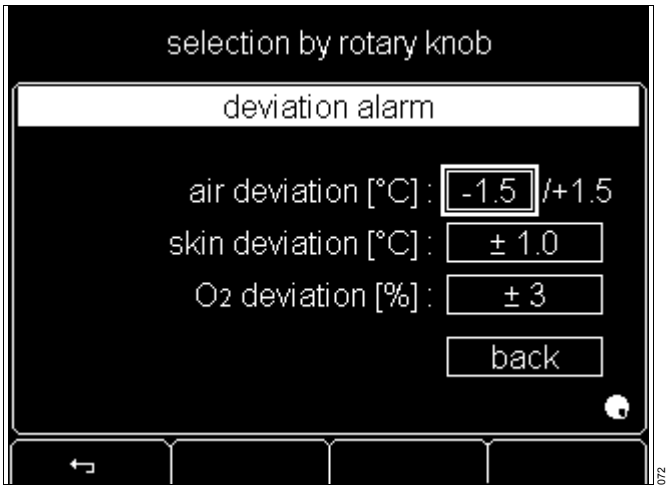


- Select air temperature deviation = turn the rotary knob.
- Confirm air temperature deviation = press the rotary knob.

The display returns to the alarm settings menu (see page 84).

The other alarm limits are set in the same way.

- Cancel selection = press »↩« key.

– The display returns to the configuration parameter menu (see page 81).

* optional

**$O_2$ Sensor Information***

For the used $O_2$ sensors,
– the manufacturing date,
– the date of last calibration and
– the date of next calibration
are displayed on the screen.

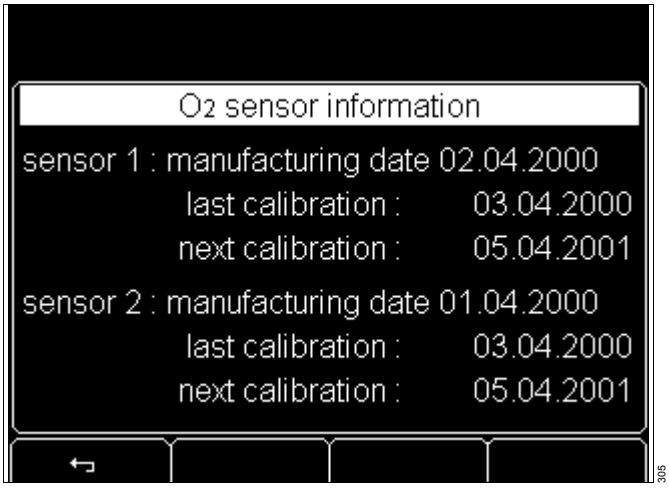


**Viewing software information**

– The software version and the number of operating hours are displayed on the screen. Where applicable, this screen contains additional information on service intervals. Further information on this subject is provided in the service documentation.

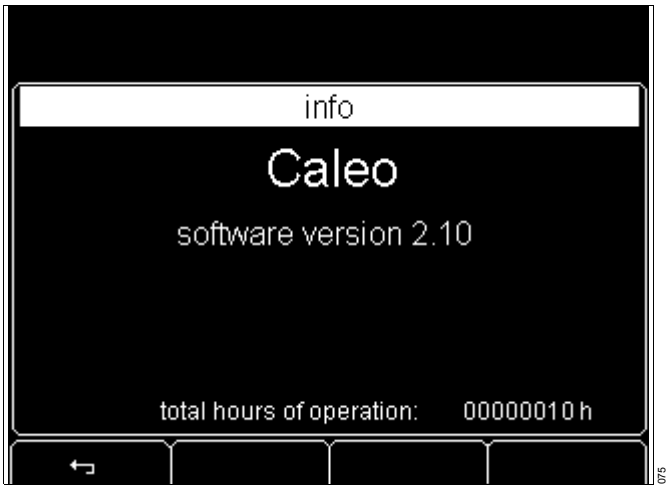


**1** Return to configuration parameter menu = key.
or
**2** Press the rotary knob.
– The display returns to the configuration parameter menu (see page 81).

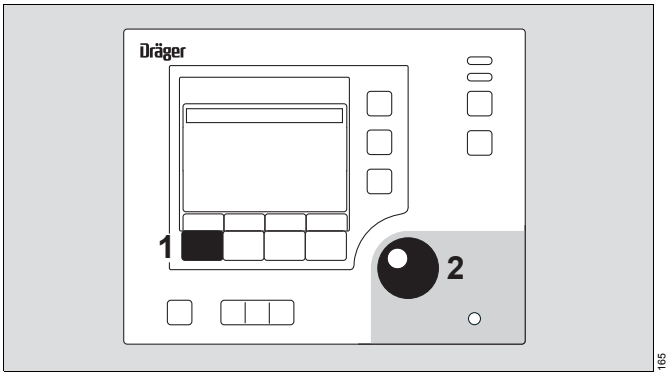


* optional equipment feature

## Lock key pad functions

**1** To lock further on-screen setting = press key.
**1** The LED on the key lights up.

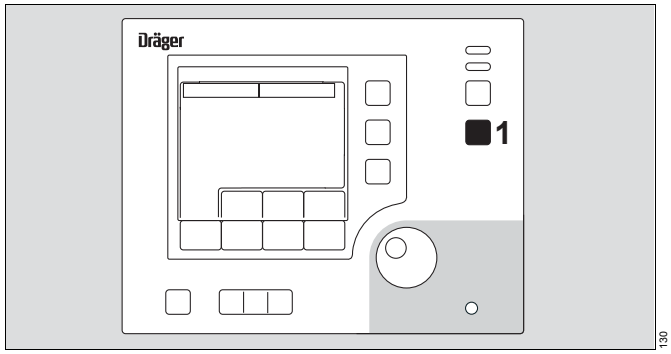


130

– After 4 seconds, all screen functions are locked, **except for**:
**2** Lock key pad function
**3** Alarm suppression
**4** Rotary knob
**5** Bed-tilting mechanism

**1** The LED in the key remains lit.

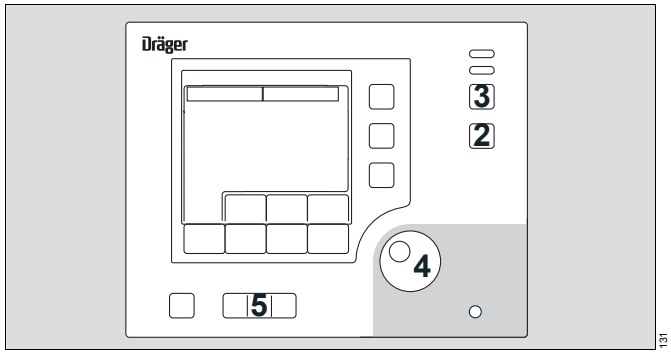


131

Enabling screen functions:
**1** Change setting on screen = press key.
**1** The LED in the key goes out.
– After 4 seconds, the screen functions can be changed. The LED in the key remains off.

## Alarm suppression

**6** Pressing this key if an alarm is active:
– The audible alarm is muted
– The central alarm indicator goes out*.
**6** The LED in the key is not lit.
The duration of alarm suppression depends on the type of alarm. When the cause of the alarm is removed, alarm suppression is automatically ended.

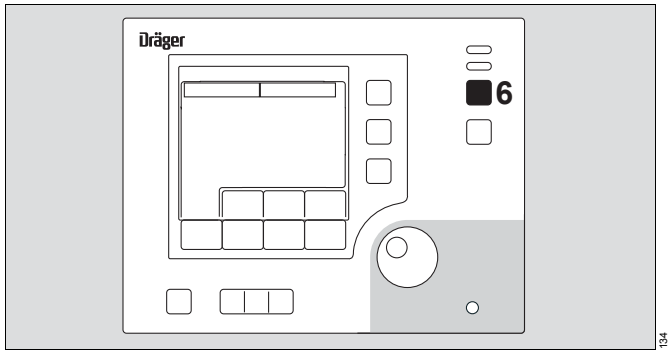


134

**6** Pressing this key if no alarm is active (alarm muting):
For all alarms occurring in the ensuing 4 minutes due to insufficient values for
– Air temperature
– Skin temperature
– Humidity
– $O_2$ concentration
no alarm tone is sounded and the central alarm indicator* is not lit until expiry of the alarm muting.
**But:** The alarm message is displayed on the screen, the measured value and the bar LED flash.
**6** The LED in the key lights up.

**NOTE**
Alarms that are already suppressed will be suppressed for the next 4 minutes regardless of the actual duration of suppression.

---

* The central alarm indicator can be switched off.
See "Setting system parameters" on page 83.

## Weighing scale*

The weighing scale is located directly underneath the bed.

During the weighing process, the entire bed and all objects on it are weighed. By lifting the patient, all other weights are deducted, so that the baby's weight can be precisely determined. The accuracy of the weight measurement is not limited by the objects placed on the bed. These additional objects only reduce the maximum displayable value of the scale by their combined weight. In the event of patients that need supply by hoses, e.g. ventilation hoses, the influence of these hoses on the measured weight, as with other types of scales, cannot be fully eliminated. In order to avoid fluctuating weighing results, the hoses should be removed from the ventilation hose holder, if fitted, before weighing, and then, after laying the patient on the bed, the hoses should also be laid on the bed in as strain-free and horizontal a position as possible. Like items of clothing, if parts of the hoses are weighed with the patient, they can lead to a slight increase in measured weight. Since these deviations are systematic, they do not affect trend observations.

Weight measurements will only be completely accurate where taring has been used. Without taring the level of accuracy will be reduced. Changes made between measurements, such as, changing in the tilt angle of the device or adding or removing objects from the bed, may result in inaccurate results.

For weight measurements without using tare, particular attention must also be paid to ensuring vibration free conditions. Pressing keys on the control unit too forcibly may lead to vibration that may reduce the accuracy of the weight measurement. It is suggested that weighing should only be conducted when the trolley castors on Caleo are locked. This helps to cushion vibrations and increases the accuracy of weight measurements.

Before weighing, check that the bed is fully pushed in and is in the horizontal position.

The spirit levels show whether the bed is horizontal.

**1** Spirit levels for the horizontal alignment of Caleo® in the transverse axis.

**2** Spirit level for the horizontal alignment of Caleo® in the longitudinal axis.

To align the bed horizontally see page 27.

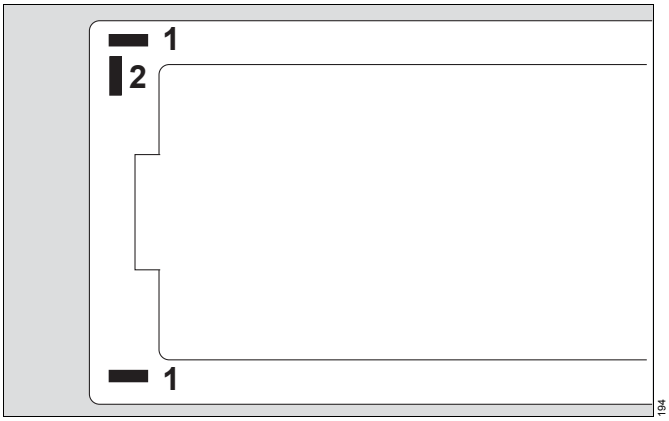


* optional equipment feature

**CAUTION**

Observe the following note for a correct weight determination. Failure to do so can give rise to considerable measuring errors.

To safeguard critical therapeutic decisions based on the patient's weight, the weighing result should be checked against a reference measurement on an external scale.

- Before the weighing process, make sure that both knobs are set to the scales position .
- During the weighing process, Caleo® must not be exposed to any vibrations.
- During the weighing process, no objects may be placed on the bed surface.
- During the weighing process, no objects may be placed been the bed and the housing.
- Hoses routed over the ventilation hose holder may affect the accuracy of weighing.

**NOTE**

To maintain the accuracy of the scales specified in the Technical Data, the scales should be checked regularly with the help of a test weight. The specified accuracy of the scales can be achieved in some regions only if the scales are calibrated at the installation location.

**Preparing for weighing**

- Set Caleo® to the horizontal position. Check with the aid of the built-in spirit levels, see page 27.
- Remove all objects that touch both the bed and the fixed surrounding parts i.e. the incubator base.
- Set both knobs to the scales position , see page 24.
- Prepare the patient for lifting.

**Starting the weighing procedure**

**1** Activate the weighing process = press key.

If the scale is **not** ready for operation, this function cannot be activated.

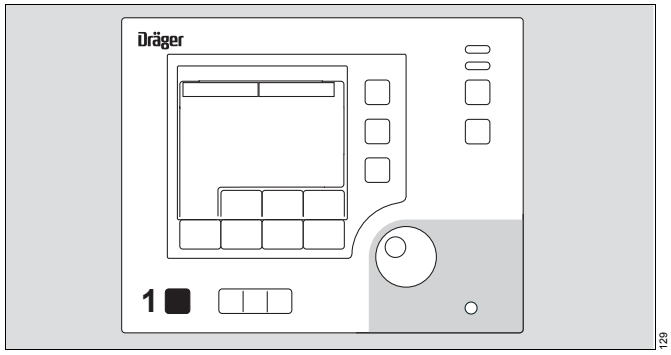

During weighing, the user is guided through the sequence of operating steps by the following prompts.

- Lift the baby off the bed.

The device waits until the scale has stabilized and is at rest for 3 seconds.

– 1 beep is emitted.

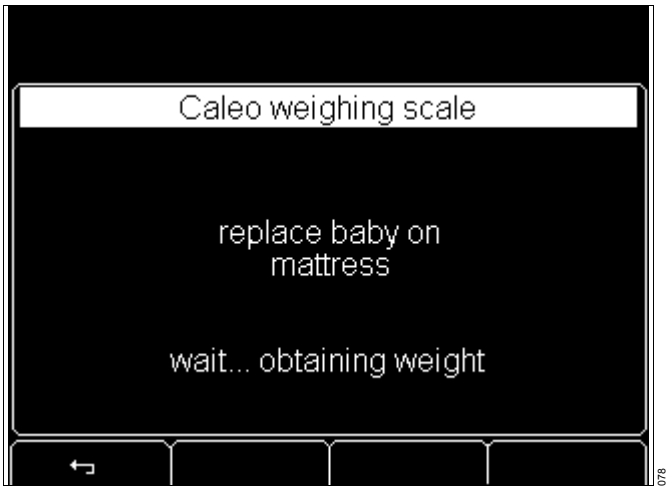


- Place patient on bed.

Weighing then proceeds.

– 1 beep is emitted.

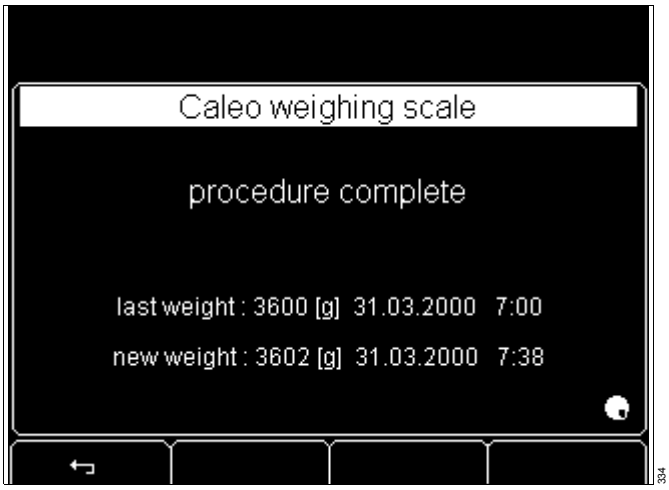


The weighing procedure is complete.

– The current and last weighing results are displayed on the screen. If the measuring range is exceeded, the symbol ⚠ is displayed.

After 10 seconds, the display reverts automatically to the standard screen.
or
- Display the standard screen = press the rotary knob.

The screen displays the last weight as message text for the next 10 minutes.

**Weighing process cancelled**

Weighing is aborted if the patient weight (minimum 250 g) is not removed or applied within 60 seconds.

– 3 short beeps are emitted.

**Weighing without tare**

If the last tare weight was obtained no longer than 60 minutes earlier, and if no objects have since been removed from the bed or placed on it, recalibration with a new tare weight is not necessary.

**Preparing for weighing**

- Set Caleo® to the horizontal position. Check with the aid of the built-in spirit levels, see page 27.
- Set both knobs to the horizontal position , see page 24.

**Starting the weighing procedure**

**1** Activate the weighing process = press key.

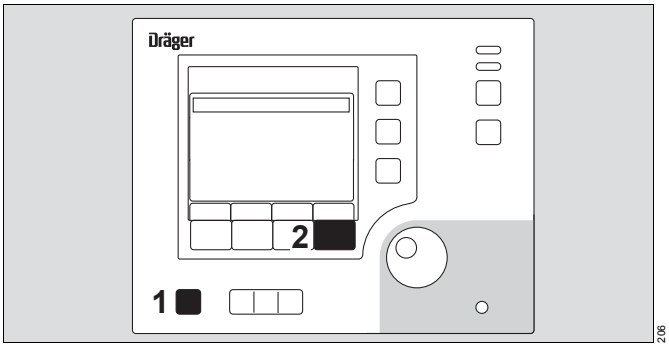


Caleo® proposes reweighing directly without obtaining a tare.

**2** Weigh without tare = press key.

– Lay the patient on the bed.

Weighing then proceeds.

– 1 beep is emitted.

The weighing procedure is complete.

– The current and last weighing results are displayed on the screen. If the measuring range is exceeded, the symbol ⚠ is displayed.

After 10 seconds, the display reverts automatically to the standard screen.

or

- Display the standard screen = press the rotary knob.

The screen displays the last weight as advisory text for the next 10 minutes.

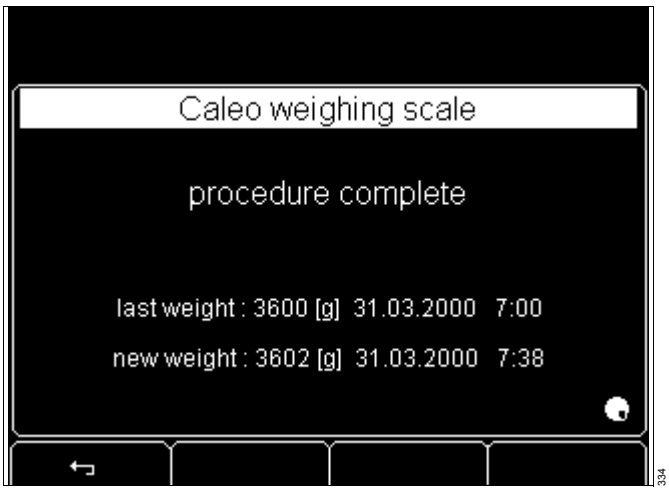


## Ending operation

**NOTE**
Before turning off Caleo, acknowledge all active alarms with high risk potential. Otherwise the nurse call system will continue to indicate the active alarm* after the device has been switched off.

**Switch off the device**

**1** Switch off the incubator = press the on/off switch.

The incubator is switched off.

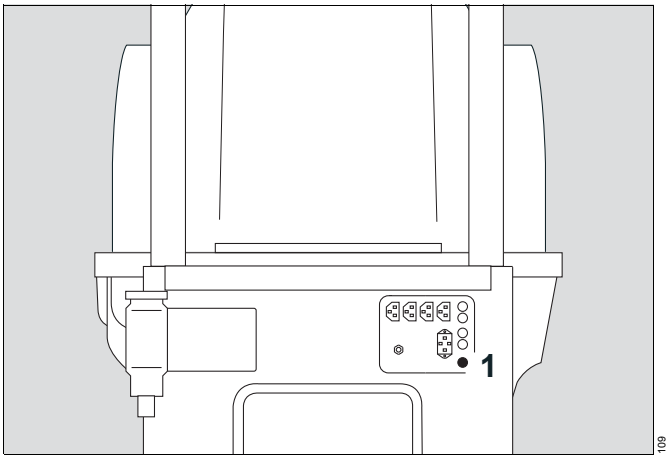


If the $O_2$ hose is connected*:

– Disconnect the probe from the outlet of the central $O_2$ supply pipeline and place it in the "Park" position (strictly follow the separate Instructions for Use).

* optional equipment feature

# Preparation

**Cleaning, disinfecting and sterilizing** . . . . . 94

Testing of procedures and agents . . . . . 94
Stripping down . . . . . 96
Before reusing for a patient . . . . . 103
Reprocessing List . . . . . 105

**Maintenance intervals** . . . . . 106

Maintenance terms and definitions . . . . . 106
Safety checks . . . . . 106
Maintenance . . . . . 108

**Disposal** . . . . . 109

# Cleaning, disinfecting and sterilizing

**WARNING**
**Disinfect and clean the device after use to avoid risks to the hospital staff and other persons.**
**To disinfect contaminated parts, follow the hygiene specifications of the hospital (protective clothing, eye protection etc.).**

**CAUTION**
Even device materials and reusable accessory parts (e.g., depending on their preparation) have a limited service life. Handling and reprocessing can increase wear and markedly shorten service life (e.g., disinfectant residues can attack the material more intensely during autoclaving). If signs of wear become visible, such as cracks, deformation, discoloration, peeling, etc., affected parts must be replaced.

## Testing of procedures and agents

Due to material incompatibilities, preparations based on
– halogen-releasing compounds
– strong organic acids
– oxygen-releasing compounds
– alcohol
are of only limited suitability.

The cleaning, disinfection and sterilization (reprocessing) of medical devices were checked with the following procedures and agents. On the date of the check, the following resources indicated good material compatibility:

| Surface disinfectant | Manufacturer |
|---|---|
| Incidur® | Ecolab Deutschland GmbH |
| Dismozon® pure | Bode Chemie GmbH & Co., Germany |
| Virkon | Tetenal, Germany |
| Seculyse | Paragerm (Henkel Ecolab), France |
| Sekupoudre | Paragerm (Henkel Ecolab), France |
| Vaposeptol | Paragerm (Henkel Ecolab), France |
| Cidex | Johnson & Johnson, Taiwan |
| Habitane | Zeneca Limited, Norway |
| Kloramin | Norsk Medisinal Depot A/S, Norway |
| Sactiv | Diversey Lever, Finland |
| Viraclean | Whiteley, Australia |
| HYDROX | Diversey, Canada |

Note the manufacturer's directions for use.

The following materials are used in the patient capsule:

| Components | Material |
|---|---|
| Hood, flaps | Polycarbonate |
| Pillar elements | Styrene-butadiene thermo foam injection molded material<br>ABS (acrylonitrile/butadiene/styrene) |
| Bed | Styrene-butadiene thermo foam injection molded material<br>ABS (acrylonitrile/butadiene/styrene) |
| Trough | Styrene-butadiene thermo foam injection molded material<br>ABS (acrylonitrile/butadiene/styrene) |
| X-ray drawer | Polystyrene thermo foam injection molded material |
| Housing | Polystyrene thermo foam injection molded material |
| Caleo® SoftBed™ | Polyurethane/polyester |

The following disinfectants have been tested and are **not** to be used because of material incompatibility:

| Surface disinfectant | Manufacturer |
|---|---|
| PaMo dur | Dräger, Germany |
| PaMo dur rapid AF | Dräger, Germany |
| PaMo dur Spray | Dräger, Germany |
| PaMo sept Univ. AF. | Dräger, Germany |
| Daisy Des | Dräger, Germany |
| Incidin Extra N | Henkel, Germany |
| Terralin | Schülke & Mayr, Germany |
| Asphene Spray | Laborat, France |
| Korsolin 50 | Bode, France |
| Minudes | Paragerm, France |
| Virufen | Paragerm, France |
| Osuban S | Japan |
| Taski Exact 300 | Finland |

**WARNING**
**Risk of burning when touching the heater!**
**When the incubator is closed, the heater is still hot enough to cause serious burns for a long time after switching off (still approx. 70 °C after 1 hour).**
**Allow Caleo® to cool down sufficiently before stripping it down.**

Clean and disinfect the incubator thoroughly:
– after each change of patient
– at least once a week.

**Manual cleaning and disinfection**

Manual disinfection should preferably be carried out with disinfectants on the basis of Aldehydes.
Observe the applicable country-specific listings for disinfectants. The list of the German Association for Applied Hygiene (Verbund für Angewandte Hygiene VAH) applies in German-speaking countries.
The composition of the disinfectant is the responsibility of the manufacturer and can change over time.
Strictly observe the manufacturer's information on the disinfectant.

**Carry out manual cleaning and disinfection**

- Remove soilings with a wet wipe.

**WARNING**
**Penetrating liquid may cause malfunction of or damage to the device, which may endanger the patient.**
**Only wipe-disinfect items and make sure no liquids penetrate into the device.**

1. Carry out surface disinfection.
2. After contact time, remove disinfectant residues.

**Carry out machine cleaning and disinfection**

1. Strictly observe Instructions for Use of washer-disinfector.
2. Position items so that all interior spaces are completely flushed and water can drain off freely.
3. Use suitable cleaning agent.
4. Select suitable device program.
5. Carry out final rinsing with deionized water.
6. Immediately remove items from the washer-disinfector.
7. Inspect items for visible soiling and damage. If necessary, repeat program or carry out manual cleaning and disinfection.
8. Allow items to dry thoroughly.

**Visual inspection**

- Inspect all items for damage and wear, e.g. cracking, embrittlement or pronounced hardening, and residual soiling.

Disinfect and clean accessories such as the aspiration unit in accordance with their specific Instructions for Use.

**Water heater**

The water heater does not have any components that must be dismantled for the preparation.
Execute the Cleaning Mode after each change of patient.
While preparing the interior of the incubator, ensure that no liquids such as detergents penetrate into the water heater.

**Skin temperature sensors (MX11000/MX11001)**

Skin temperature sensors are disposable products and should not be reused, reprocessed or sterilized.
Any reuse, reprocessing or sterilising can lead to the failure of the medical device.

**Hood, flaps and other plastic parts**

To avoid impairment of function and long-term damages, use only suitable detergents or disinfectants and handle parts carefully.
Plastic parts, especially transparent flaps and hoods made of polycarbonate (PC), are sensitive to mechanical and chemical exposure.
When cleaning and disinfecting, do not exceed the reaction time specified by the manufacturer. Fully remove cleaning agent and disinfectant residue after the reaction time, even from the clearances.

**Softbed**

Clean and wipe-disinfect the softbed MX17012 as required, and after each patient change. In case of heavy soiling, the cover can be washed in the washing machine at 95 $^{o}$C. A drier is suitable up to 95 $^{o}$C.
In exceptional cases, the mattress core can get stained. The mattress core (foam) can then be washed in the washing machine with mild detergent at 30 $^{o}$C.

## Sterilization

During sterilization, living microorganisms are removed from semi-critical medical devices. Residual water inside the components is also dried out.

- Only sterilze cleaned and disinfected items.

Use a vacuum steam sterilizer (in accordance with DIN EN 285), preferably with fractional vacuum.
Do not use gas sterilization with ethylene oxide (EO).

## Stripping down

**Check the fresh air filter**

- To simplify the removal of the fresh air filter, tilt the device (see page 27).

**1** Check the expiry date: see the label on the unit.

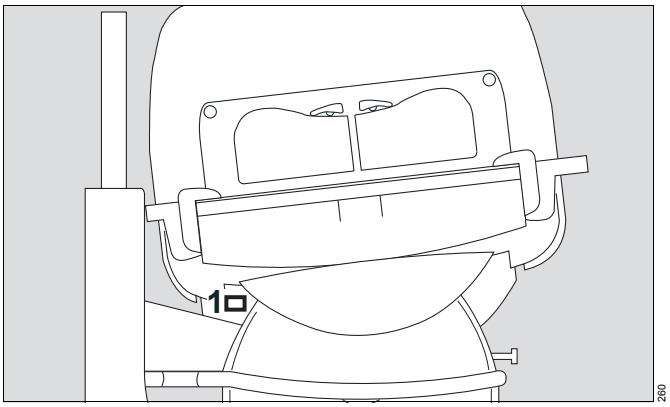


**2** Press down the knurled part of the clip and open the filter flap.

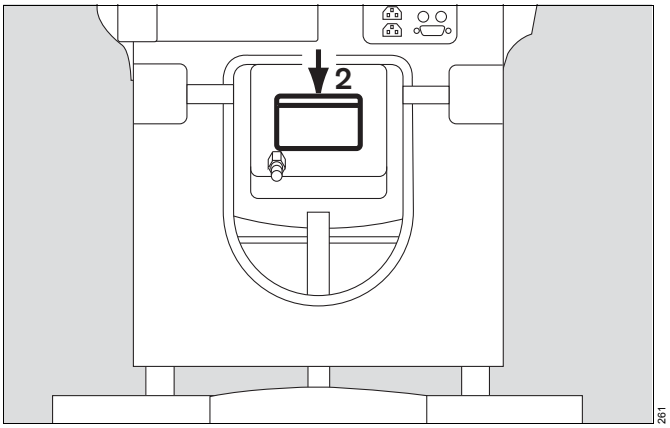


If a filter is already in position:

- Check the condition of the filter.

Replace the filter when

– the filter is fouled, damaged or moist.
– the expiry date has been reached.
– the filter has been used with an infectious patient.

- Discard the old filter.
- Fit a new filter.

**Inserting the filter:**

- Insert the filter in the open filter flap.

**2** Close the filter flap.
Make sure that filter flap clicks in place.

- Write down the expiry date of the new filter (2 months after installation) on the label.

**1** Stick the label to the device.

**Removing the water supply**

- Close the clamp on the transfer set.
- Remove and dispose of the water bag and transfer set.

or

**1** Remove the water tank from the holder.
**2** Detach the transfer set from the water tank.
- Discard the transfer set.

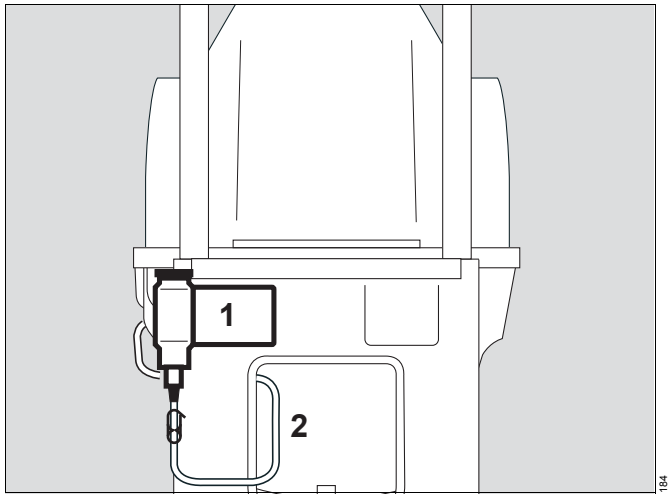


- Clean the water tank in the cleaning and disinfecting machine at 93 $^{o}$C*.

or

- Sterlize at 134 $^{o}$C*.

* Observe national and international standards on cleaning, disinfecting and sterilization procedures. (e.g. EN 285, EN ISO 17665-1:2006, EN 556).

- Set the bed of Caleo® to a horizontal position (see page 27).
- Switch on cleaning mode* (see page 78).

**NOTE**
After Cleaning Mode* has ended or if humidity control is not available:
- Switch off the incubator and disconnect it from the mains power supply.
- Remove any auxiliary equipment installed (for reprocessing instructions see the specific Instructions for Use of the equipment concerned).

**WARNING**
**Risk of burning when touching the heater!**
**When the incubator is closed, the heater is still hot enough to cause serious burns for a long time after switching off (still approx. 70 °C after 1 hour).**
**Allow Caleo® to cool down sufficiently before stripping it down.**

**Removing the double wall**

**1** Pull the plunger up as far as it will go.
The red shaft of the plunger will then be visible.
**2** Grip the double wall with both hands and lift it off.

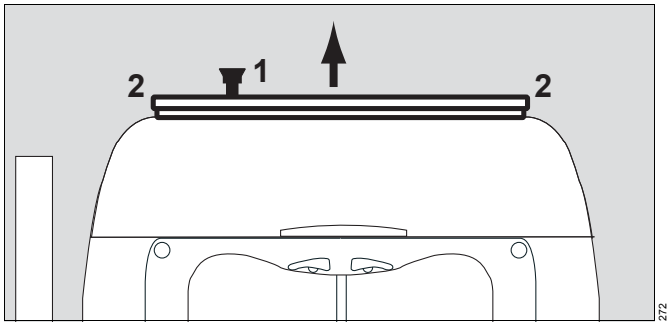


- Place the double wall on a soft, non-scratch surface.
- Remove the continuous seal from around the double wall.

**3** Force the bore sleeve apart
and
**4** remove the plunger.

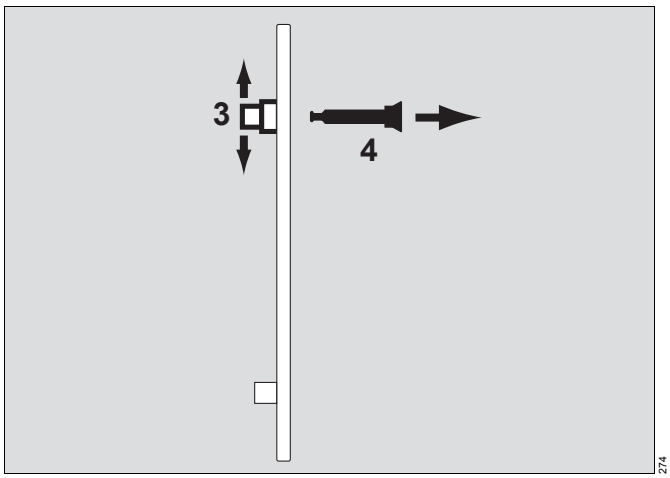


* Only available in combination with humidity control.

**1** Tip the bore sleeve to the side and remove it.
**2** Tip the centering lugs to the side and remove them.

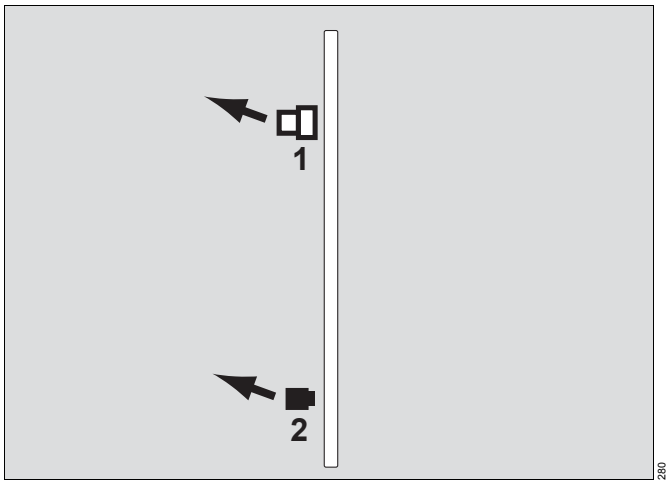


- Remove visible soiling with a disposable cloth.
- Wipe-disinfect the double wall surfaces.
- After allowing the disinfectant time to take effect (see manufacturer's specifications), wipe the surface with a clean damp cloth and then rub dry.

- Clean all other parts in the cleaning and disinfecting machine at 93 $^{o}$C *.

**Removing the canopy**

**3** Hold the canopy with both hands using the handles on the side.
**4** Lift the canopy vertically from the pillar elements.

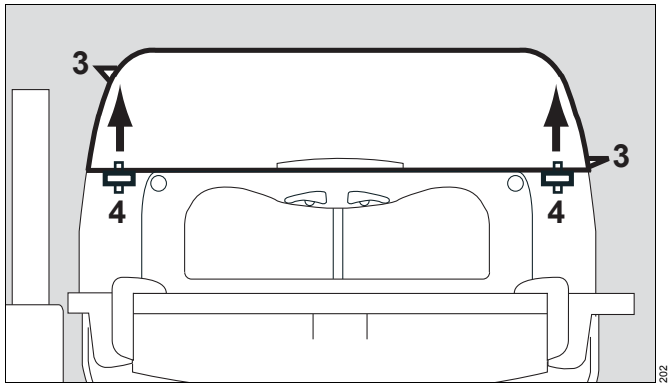


- Remove visible soiling with a disposable cloth and detergent.
- Wipe-disinfect the surfaces.
- After allowing the disinfectant time to take effect (see manufacturer's specifications), wipe the surface with a clean damp cloth and then rub dry.

**Removing the canopy prop**

The canopy prop (2M 51 141) is only mounted on the pillar elements (2M 51 154 and 2M 51 156).

**5** Move the prop to a vertical position and remove it.

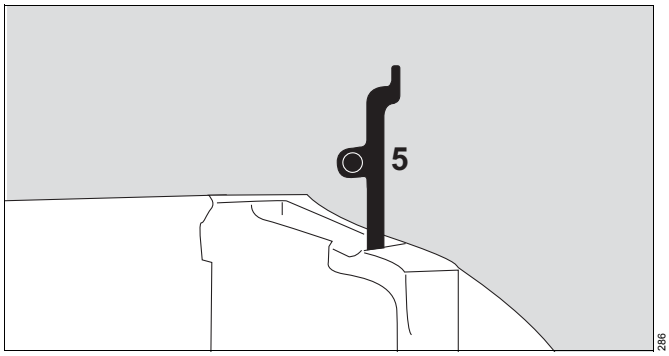


- Prepare the prop in the cleaning and disinfecting machine at 93 $^{o}$C*.

* Observe national and international standards on cleaning, disinfecting and sterilization procedures. (e.g. EN 285, EN ISO 17665-1:2006, EN 556).

**Open the front flap**

**1** Turn the two locking knobs inwards as far as they will go and fold down the front flap.

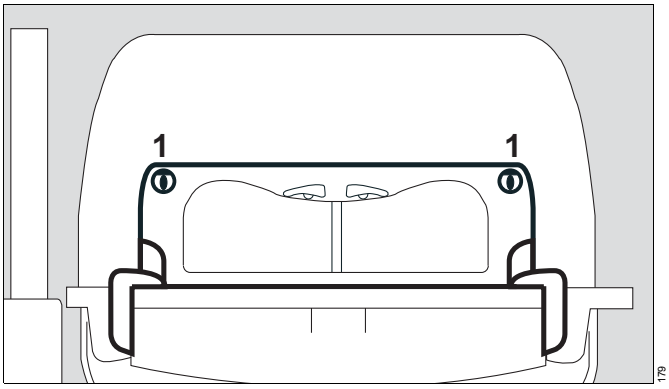


- Fold out the moveable double walls to clean them.
- Open the side flaps in the same way.
- Remove visible soiling with a disposable cloth and detergent.
- Wipe-disinfect the surfaces.
- After allowing the disinfectant time to take effect (see manufacturer's specifications), wipe the surface with a clean damp cloth and then rub dry.

**Grommets**

- Remove all grommets.
- Prepare them in the cleaning and disinfecting machine at 93 °C*.

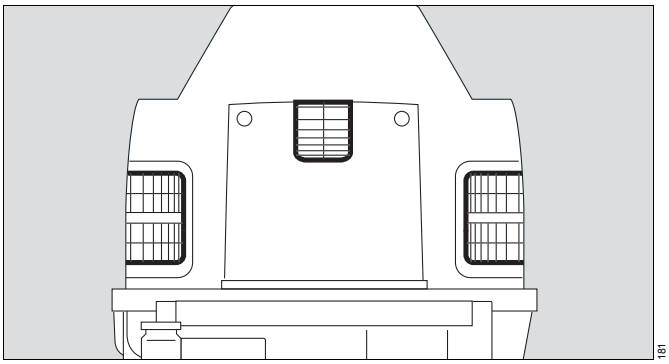


- Push out the drainage module** to the side by the drainage clip.
- Push the drainage clip off the drainage unit.
- Clean the parts in the cleaning and disinfecting machine at 93 °C*.

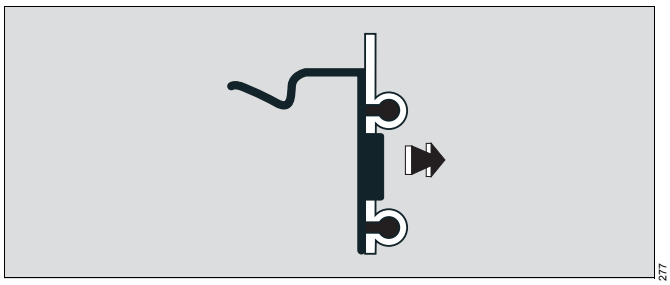


**Mattress and bed**

- Remove the mattress from the bed.

**2** Remove the bed.

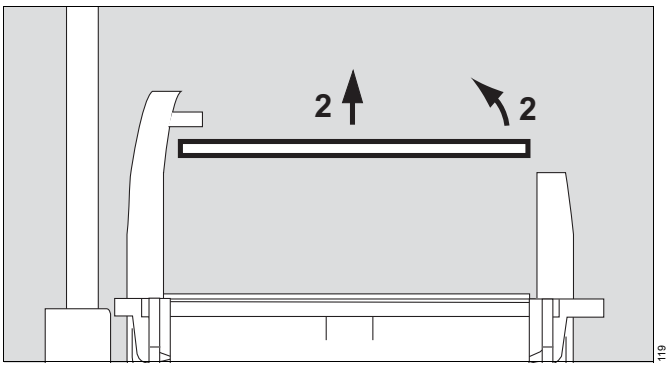


**NOTE**
Pay attention to the sensor unit while removing the bed.
Risk of damage to sensor unit.
Remove the bed carefully.

- Remove visible soiling with a disposable cloth and detergent.
- Wipe-disinfect the surfaces.
- After allowing the disinfectant time to take effect (see manufacturer's specifications), wipe the surface with a clean damp cloth and then rub dry.

---

* Observe national and international standards on cleaning, disinfecting and sterilization procedures. (e.g. EN 285, EN ISO 17665-1:2006, EN 556).

** optional equipment feature

**Remove the X-ray drawer**

- Using the recessed handle, pull out the X-ray drawer as far as it will go.

**1** Tilt the drawer upwards and pull it out of the unit.

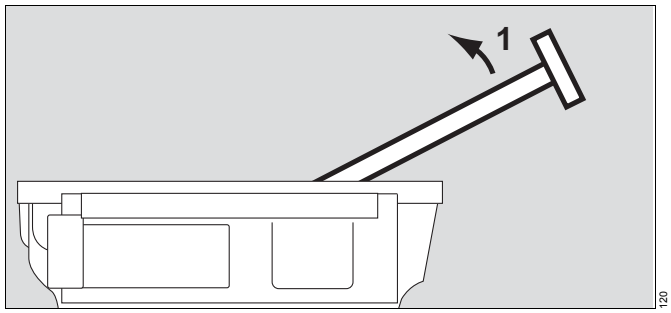


- Remove visible soiling with a disposable cloth and detergent.
- Wipe-disinfect the surfaces.
- After allowing the disinfectant time to take effect (see manufacturer's specifications), wipe the surface with a clean damp cloth and then rub dry.

**Remove trough**

**2** Press both catches inwards and pull the trough upwards.

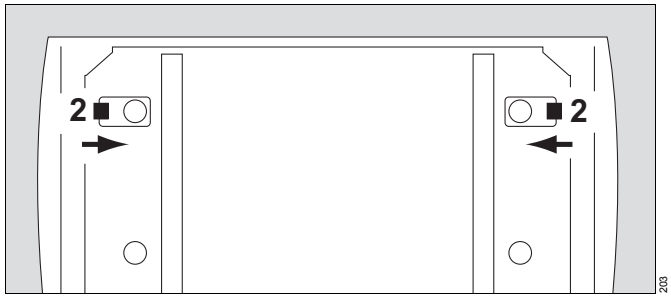


**3** Lift out the trough.

**4** Remove the fan impeller.

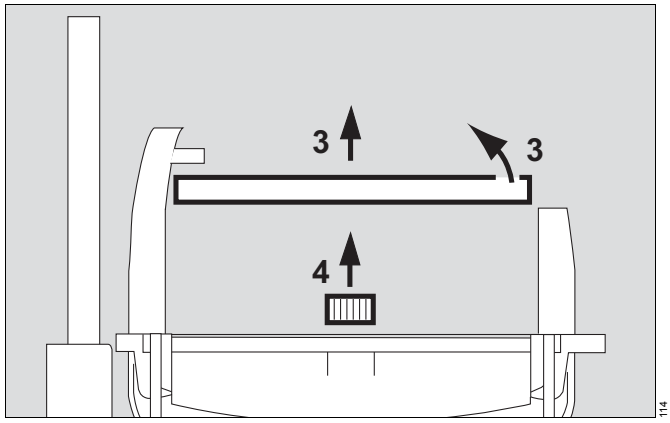


- Remove visible soiling with a disposable cloth and detergent.
- Wipe-disinfect the surfaces.
- After allowing the disinfectant time to take effect (see manufacturer's specifications), wipe the surface with a clean damp cloth and then rub dry.

- Turn the trough over.

**5** Lift the air guide plate to the side to disinfect and clean.

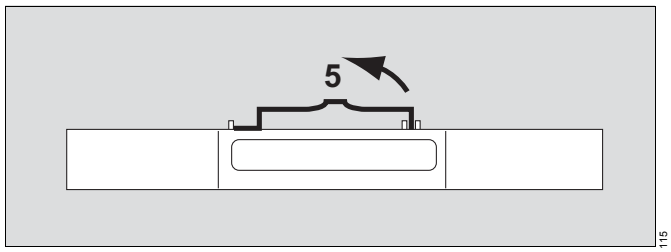


- Remove visible soiling with a disposable cloth and detergent.
- Wipe-disinfect the surfaces.
- After allowing the disinfectant time to take effect (see manufacturer's specifications), wipe the surface with a clean damp cloth and then rub dry.

**Base frame**

- Remove visible soiling with a disposable cloth and detergent.
- Wipe-disinfect the surfaces.
- After allowing the disinfectant time to take effect (see manufacturer's specifications), wipe the surface with a clean damp cloth and then rub dry.
- Remove any impurities near the slits of the sensor unit.

**CAUTION**
When cleaning and wipe-disinfecting the base frame, penetrating humidity may damage the sensor unit.
Do not allow any moisture to enter the sensor. Do not disinfect the sensor unit by immersion or spraying.

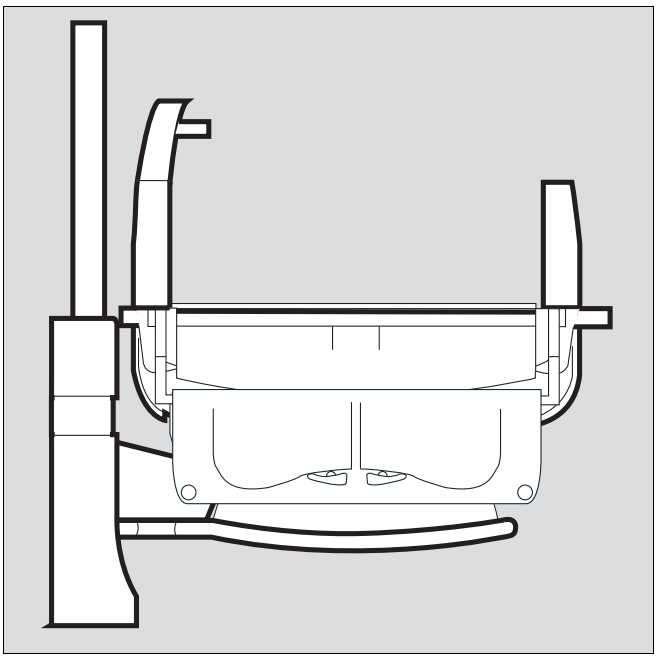


**Control panel**

- Pull off the rotary knob.

- Remove visible soiling with a disposable cloth and detergent.
- Wipe-disinfect the surfaces.
- After allowing the disinfectant time to take effect (see manufacturer's specifications), wipe the surface with a clean damp cloth and then rub dry.

**CAUTION**
When cleaning and wipe-disinfecting the control unit, penetrating moisture may damage the sensor unit.
Do not allow any moisture to enter the sensor. Do not disinfect the sensor unit by immersion or spraying.

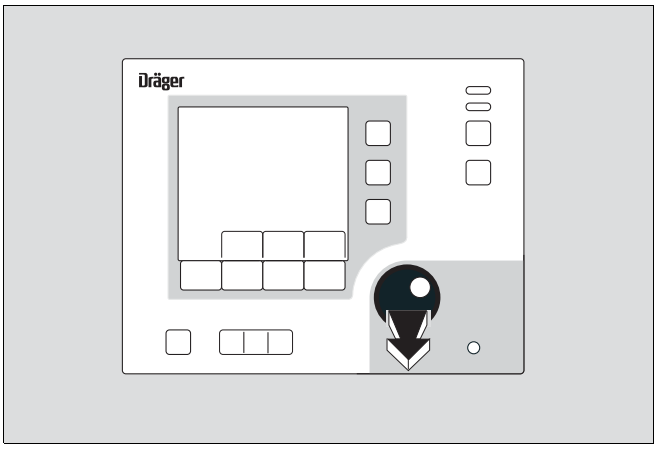


**NOTE**
Risk of cracks forming in the transparent parts if cleaning agents and disinfectants not recommended in this Instructions for Use are used, such as alcohol.
Use only the recommended cleaning agents and disinfectants (page 105).

**NOTE**
Crack formation in the plastic components is possible due to UV light radiation. Do not expose Caleo to UV radiation.

## Before reusing for a patient

- Check that the system has been cleaned and disinfected in conformity with the regulations of the hospital.
- Reassemble the equipment with disinfected hands.
- Refit all equipment, see "Stripping down", page 96.

**NOTE**
A loose trough with incorrectly engaged holders can endanger the patient. When engaging the trough, make sure that both holders click into place.

If the holders of the trough are damaged:
- Call DrägerService.

**Assembling the double wall**

- Check parts for damage and replace if necessary.

- Fit the parts into the double wall.

Fit in the following order:
**1** Sleeve
**2** Plunger
**3** Centering lug
**4** Seal

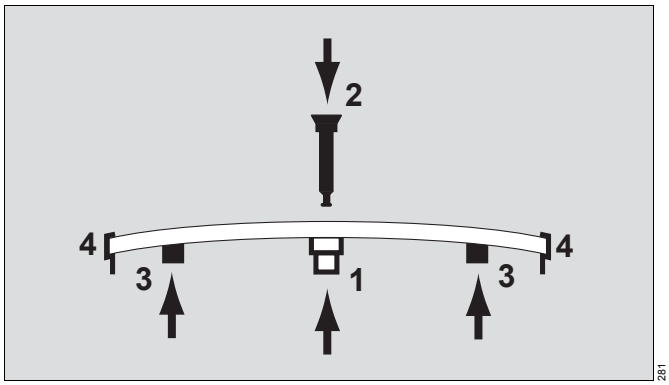

**Inserting the drainage module* into the pillar element**

- Check parts for damage and replace if necessary.
- Push the drainage unit and the drainage clip back together.
  **Make sure that they are aligned correctly!**

**5** Insert the drainage module into the pillar element from the side until it engages.
The lug of the drainage clip must be facing outwards and the perimeter of the drainage module must be flush with the pillar element.

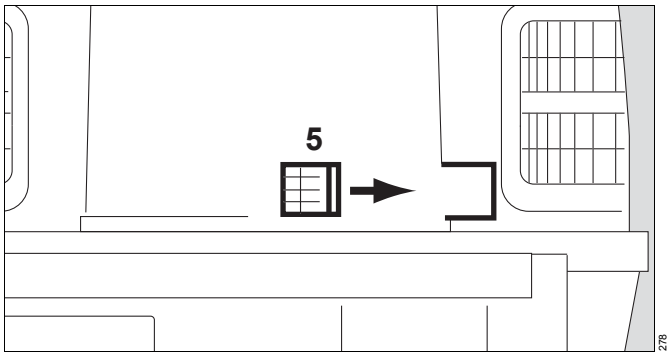


- Close the side flap.

- Check readiness for operation,
  see "Before Every Use" on page 32.

**NOTE**
Any disinfectant residue can damage plastic parts.
To remove any disinfectant residue, the incubator should be operated in the standby mode.

- Switch on Caleo® (see page 44).
- Activate air temperature control (see page 45).
- Run Caleo® at 37 °C and with open flaps.

If using a water tank:
Do not refill the water tank until just before placing the patient in Caleo® (see page 28).

If using a water bag:
Do not connect the water bag until just before placing the patient in Caleo® (see page 28).

* optional equipment feature

## Reprocessing List

Applicable to non-infectious patients.
The list contains approximate values only. The instructions of the hospital's infection control officer shall prevail and must be observed by the user!

| What | How often | How | | |
|---|---|---|---|---|
| | | Disinfection and Cleaning | | Sterilization |
| **Reusable components** | **Care intervals** | Wiping[a)] | Cleaning and disinfecting machine[b)] 93 °C [c)] | Steam 134 °C [c)] |
| Transfer set | Replace weekly and after Change of patient | | | |
| Water tank | Change of patient/weekly | | yes | yes |
| Double wall | Change of patient/weekly | yes | | |
| Bore sleeve, plunger, centering lug, seal | Change of patient/weekly | | yes | |
| Hood | Change of patient/weekly | yes | | |
| Canopy prop | Change of patient/weekly | | yes | |
| Front flap | Change of patient/weekly | yes | | |
| Side flap | Change of patient/weekly | yes | | |
| Double walls | Change of patient/weekly | yes | | |
| Grommets | Change of patient/weekly | | yes | |
| Drainage module, drainage clip | Change of patient/weekly | | yes | |
| Bed | Change of patient/weekly | yes | | |
| Mattress | Change of patient/weekly | yes | | |
| X-ray drawer | Change of patient/weekly | yes | | |
| Trough | Change of patient/weekly | yes | | |
| Air guide plate | Change of patient/weekly | yes | | |
| Fan impeller | Change of patient/weekly | yes | | |
| Base frame | Change of patient/weekly | yes | | |
| Control panel | Change of patient/weekly | yes | | |
| Rotary knob (control panel) | Change of patient/weekly | yes | | |
| Fresh air filter | Fresh air filter Replace every 2 months | | | |

**a) Use the recommended surface disinfectants (see page 94) or comparable disinfectants.**

**b) Use only detergent.**
**Do not use disinfectants that release alkali or chlorine. Risk of corrosion!**

**c) Observe national and international standards on cleaning, disinfecting and sterilization procedures (e.g. EN 285, EN ISO 17665-1:2006, EN 556).**

**NOTE**
Use of non-recommended detergents and disinfectants can endanger the patient/user and lead to material damages in the incubator.

# Maintenance intervals

This chapter describes the required maintenance measures to ensure correct functioning of the medical device. These measures should be performed only by maintenance personnel.

**CAUTION**
Disinfect and clean the incubator or the relevant parts before each maintenance operation, even when returning the equipment for repair purposes!

**CAUTION**
Danger of an electric shock and device failure
Do not remove cover. Maintenance jobs must be performed only by maintenance personnel. Dräger recommends the DrägerService for this purpose.

## Maintenance terms and definitions

| Term | Definition |
|---|---|
| Maintenance | Combination of all technical and administrative measures during the life cycle of a medical device for retention or restoration of working condition, so that the medical device can perform the required function |
| Inspection | Measures for the determination and assessment of the real condition of a medical device, including determination of the causes of wear and tear, and derivation of the required consequences for future use |
| Preventative Maintenance | Recurrent specified measures intended to maintain the functional condition of a medical device |
| Repair | Measures for the restoration of a medical device to the functional condition except for improvements |

## Safety checks

The safety-related checks do not substitute the maintenance specified by the manufacturer, with the preventive replacement of wearing parts.

**CAUTION**
Perform safety-related checks in the specified intervals. The correct functioning of the medical device may be endangered otherwise.

1 Check the accompanying documentation:
   – Current Instructions for use are available
2 Check all functions according to the Instructions for Use.
3 Check to ensure that the device combination is in flawless condition:
   – Labels are complete and legible
   – No visible damages
   – Fuses accessible from outside match the specified values
4 Check the equipment of the medical device fully in accordance with the Instructions for Use.
5 Check electrical safety conforming to IEC 62353.

6 Check safety systems
Check the incubator temperature:

- Check the thermometer:
  Measured value at the time of measurement should not deviate more than ±0.8 °C from the displayed atmospheric temperature
- Accuracy of thermometer < 0.1 °C
- Steady state in the incubator:
  Fluctuations of not more than ±0.5 °C over a period of 20 minutes
- Define measuring point:
  10 cm above the center of the horizontal bed
- Carry out measurement:
  at set value 36 °C, ambient temperature 23 °C ±2 °C

## Maintenance

**CAUTION**
This device must be inspected and serviced at manufacturer-specified intervals.

The following table shows the maintenance intervals:

| | Interval times | | | | | | Who? |
|---|---|---|---|---|---|---|---|
| | **when necessary** | **weekly** | **every 2 months** | **every 6 months** | **once a year** | **every two years** | |
| **Replaceable parts:** | | | | | | | |
| Fresh air filter | X | | X | | | | User |
| Grommets | X[a)] | | | | | | User |
| Fan motor | | | | | | X[b)] | Professionals |
| Lithium battery | | | | | | X | Maintenance personnel |
| $O_2$ sensors | | | | | | X | Professionals |
| Skin temperature sensors | | X[c)] | | | | | User |
| Adhesive pads | | X[d)] | | | | | User |
| Mattress | X | | | | | | User |
| **Maintenance:** | | | | | | | |
| Inspection | | | | X | | | Maintenance personnel |
| Safety inspections[e)] | | | | | X[f)] | | Maintenance personnel |
| Measaurement checks | | | | | | X[g)] | Maintenance personnel |
| **Calibration:** | | | | | | | |
| $O_2$ sensors | | | | | X | | Professionals |
| Scales | | | | | X | | Professionals |

a) Replace if the material becomes brittle or sticky or if strips of material have become detached
b) Replace after 18000 – 20000 operating hours
c) At the latest when changing patient
d) At the latest when changing patient
e) Designation is applicable in the Federal Republic of Germany; in the Republic of Austria this corresponds to the "Recurring safety-related check"
f) Provided it is prescribed by national law, e. g., §6 MPBetreibV in Germany.
g) Provided it is prescribed by national law, e. g., §11 MPBetreibV in Germany.

# Disposal

**Disposal of the transfer set and fresh air filter**

– With household waste.

**Disposal of $O_2$ sensors and battery**

– Do not throw into the fire. Risk of explosion.
– Do not force open: risk of chemical burns.
– Do not recharge the battery.

Special waste:

– Dispose of special waste in accordance with national waste disposal regulations.

Further information can be obtained from national and local environmental and legislative authorities and suitable waste disposal companies.

**Disposal of incubator**

At the end of its service life.

– Dispose of the incubator in conformity with national waste disposal regulations.

or

– Hand the incubator over to a suitable waste disposal company for disposal.

Further information can be obtained from national and local environmental and legislative authorities.

**For countries subject to the EU Directive 2002/96/EC:**

This device is subject to EU directive 2002/96/EC (WEEE). It is not registered for use in private households, and may not be disposed of at municipal collection points for waste electrical and electronic equipment.

Dräger Medical has authorized a firm to dispose of this device in the proper manner.

For more detailed information, please contact your local Dräger Medical organization.

# Messages – Cause – Remedy

**Message – Cause – Remedy** . . . . . 112

**Error – Cause – Remedy** . . . . . 118

# Message – Cause – Remedy

The message are displayed on the screen. They are listed in the table in **alphabetical** order.
See also “Alarm descriptions” on page 138.

| Message | Causes | Remedy | Duration of alarm suppression |
|---|---|---|---|
| **Adjust. inoperable**<br>The yellow bar LED on the control unit lights up.<br>The alarm tone sequence (1 beeps) is sounded. | Height adjustment is defective.<br>Bed-tilt mechanism is defective.<br>Servomotor drive is defective. | Call DrägerService. | 15 min |
| **Air heater inoperable**<br>The measured value flashes on the screen.<br>The red bar LED on the control unit flashes.<br>The central alarm indicator lights up*.<br>The alarm tone sequence (5 beeps) is sounded. | Air heater inoperable. | Call DrägerService. | 1 min |
| **Air temp. deviation above 1.5 °C**<br>(see "Configuration" on page 85)<br>The measured value flashes on the screen.<br>The yellow bar LED on the control unit flashes.<br>The central alarm indicator lights up*.<br>The alarm tone sequence (3 beeps) is sounded. | The specified tolerance limit for deviation from the set value has been exceeded by a value either above the maximum or below the minimum value. | Reduce/increase humidity.<br>Close canopy, front flap or access ports.<br>Check the set value.<br>Check configuration (page 81). | 15 min |
| **Air temp. sensor inoperable**<br>3 flashing dashes on the screen.<br>The red bar LED on the control unit flashes.<br>The central alarm indicator lights up*.<br>The alarm tone sequence (5 beeps) is sounded. | Air temperature sensors are defective. | Call DrägerService. | 1 min |
| **Air heater temp. sensor inoperable**<br>The red bar LED on the control unit flashes.<br>The central alarm indicator lights up*.<br>The alarm tone sequence (5 beeps) is sounded. | Air heater temperature sensors are defective. | Call DrägerService. | 1 min |
| **Air temperature too high**<br>The measured value flashes on the screen.<br>The red bar LED on the control unit flashes.<br>The central alarm indicator lights up*.<br>The alarm tone sequence (5 beeps) is sounded. | Incubator temperature is above 38 °C.<br>Incubator temperature is above 40 °C. | Remove external heat sources.<br>Call DrägerService. | 5 min |

* The central alarm indicator can be switched off. See “Setting system parameters” on page 83

| Message | Causes | Remedy | Duration of alarm suppression |
|---|---|---|---|
| **Calibrate $O_2$ sensor**<br>Three flashing dashes on the screen instead of the measured value.<br>The yellow bar LED on the control unit flashes.<br>The central alarm indicator lights up*.<br>The alarm tone sequence (3 beeps) is sounded. | Calibration time of $O_2$ sensors has expired. | Switch off the $O_2$ module.<br>Call DrägerService. | 1 min |
| **Calibrate weighing scale prior to weighing** | Weighing scale is not calibrated. | Check the measuring accuracy of the weighing scale, commission re-adjustment and calibration if necessary. | |
| **Connect skin 1 sensor**<br>Three flashing dashes on the screen instead of the measured value.<br>The red bar LED on the control unit flashes.<br>The central alarm indicator lights up*.<br>The alarm tone sequence (5 beeps) is sounded. | Plug of the skin temperature (yellow) not inserted. | Check plug connection and correct if necessary. | 5 min |
| **Device error 31**<br>Short-circuit in multiplexer<br>Continuous alarm tone<br>Red bar LED lights up. | Skin temperature sensor is defective.<br><br>Device fault. | Replace skin temperature sensor.<br>Switch off device and then switch on again.<br>If no skin temperature sensor is defective, i.e., the error occurs even without the sensor:<br>Call DrägerService. | |
| **Device Error**<br>with number display<br>Continuous alarm tone<br>Red bar LED lights up. | Device fault. | Switch off device and then switch on again.<br>Call DrägerService. | |
| **Fan inoperable**<br>The red bar LED on the control unit flashes.<br>The central alarm indicator lights up*.<br>The alarm tone sequence (5 beeps) is sounded. | Fan inoperable. | Check the fan impeller.<br>Call DrägerService. | 5 min |
| **Goldcap accumulator fault**<br>The yellow bar LED on the control unit lights up.<br>The alarm tone sequence (1 beeps) is sounded. | Goldcap rechargeable battery is defective.<br>Connection of Goldcap rechargeable battery is defective. | Call DrägerService. | 10 min |
| **Humidifier inoperable**<br>The measured value flashes on the screen.<br>The red bar LED on the control unit flashes.<br>The central alarm indicator lights up*.<br>The alarm tone sequence (5 beeps) is sounded. | Water heater is defective. | Switch off humidifier module.<br>Call DrägerService. | 1 min |

* The central alarm indicator can be switched off. See “Setting system parameters” on page 83

| Message | Causes | Remedy | Duration of alarm suppression |
|---|---|---|---|
| **Humidity deviation above 10 %.** | Open the hood, front flap or access ports.<br>Sensor is defective. | Wait for the start-up phase, set value<85 %.<br>Close canopy, front flap or access ports.<br>Check water supply connection.<br>Call DrägerService. | |
| **Humidity sensor inoperable.**<br>3 flashing dashes on the screen.<br>The red bar LED on the control unit flashes.<br>The central alarm indicator lights up*.<br>The alarm tone sequence (5 beeps) is sounded. | Humidity sensor is defective. | Switch off humidity control.<br>Call DrägerService. | 1 min |
| **Key pad locked**<br>Message displayed and yellow bar LED lights up for 2 seconds when the key is pressed | Key functions (set value input/ weighing/menu key) disabled. | Activate key functions (page 87). | – |
| **Oxygen concentration below 18 %** | $O_2$ concentration is below 18 Vol.%. | Check whether the correct gas is connected.<br>Call DrägerService. | 1 min |
| **Oxygen deviation above 5 %**<br>(can be set to 3 or 5 %, see "Configuration" on page 85)<br>The measured value flashes on the screen.<br>The red bar LED on the control unit flashes.<br>The central alarm indicator lights up*.<br>The alarm tone sequence (5 beeps) is sounded. | Difference of the measured $O_2$ concentration is more than 3 or 5 %.<br><br>Values set above 65 % $O_2$. | Fully close canopy, front flap, removable bed, X-ray drawer, access ports and filter flap.<br>Check $O_2$ supply connection.<br>$O_2$-supply via central medical gas pipeline or $O_2$ cylinder.<br>Check configuration (page 81).<br><br>Reduce $O_2$ setting to 65 %.<br>Call DrägerService. | 2 min |
| **Oxygen module inoperable**<br>3 flashing dashes on the screen.<br>The red bar LED on the control unit flashes.<br>The central alarm indicator lights up*.<br>The alarm tone sequence (5 beeps) is sounded. | Control of the $O_2$ module is defective. | Switch off the $O_2$ module.<br>Call DrägerService. | 1 min |
| **Oxygen sensor 1 inoperable**<br>3 flashing dashes on the screen.<br>The red bar LED on the control unit flashes.<br>The central alarm indicator lights up*.<br>The alarm tone sequence (5 beeps) is sounded. | Sensor for oxygen measurement is defective.<br>Sensor 1 is defective. | Switch off the $O_2$ module.<br>Call DrägerService. | 1 min |
| **Oxygen sensor 2 inoperable**<br>3 flashing dashes on the screen.<br>The red bar LED on the control unit flashes.<br>The central alarm indicator lights up*.<br>The alarm tone sequence (5 beeps) is sounded. | Sensor for oxygen measurement is defective.<br>Sensor 2 is defective. | Switch off the $O_2$ module.<br>Call DrägerService. | 1 min |

* The central alarm indicator can be switched off. See “Setting system parameters” on page 83

| Message | Causes | Remedy | Duration of alarm suppression |
|---|---|---|---|
| **Oxygen sensor deviation above 3 %**<br>The measured value flashes on the screen.<br>The red bar LED on the control unit flashes.<br>The central alarm indicator lights up*.<br>The alarm tone sequence (5 beeps) is sounded. | Sensor 1 or sensor 2 is defective. | Switch off the $O_2$ module.<br>Call DrägerService. | 1 min |
| **Oxygen valve fault**<br>The measured value flashes on the screen.<br>The yellow bar LED on the control unit flashes.<br>The central alarm indicator lights up*.<br>The alarm tone sequence (3 beeps) is sounded. | $O_2$ valve is defective. | Switch off the $O_2$ module.<br>Call DrägerService. | 1 min |
| **Skin 1 sensor fault**<br>3 flashing dashes on the screen.<br>The red bar LED on the control unit flashes.<br>The central alarm indicator lights up*.<br>The alarm tone sequence (5 beeps) is sounded. | Core temperature sensor is defective. | Replace sensor. | 5 min |
| **Skin 1 temp. deviation above 0.5 $^{o}$C**<br>(can be set between 0.3 and 1.0 $^{o}$C, see "Configuration" on page 85)<br>The measured value flashes on the screen.<br>The yellow bar LED on the control unit flashes.<br>The central alarm indicator lights up*.<br>The alarm tone sequence (3 beeps) is sounded. | The limit value set for the deviation is exceeded. | Check that the sensor is correctly attached to the patient.<br>Close canopy, front flap or access ports.<br>Switch off external heat sources.<br>Remove double walls.<br>Change configuration (page 81). | 5 min |
| **Skin 1 temperature above 39 $^{o}$C**<br>The measured value flashes on the screen.<br>The red bar LED on the control unit flashes.<br>The central alarm indicator lights up*.<br>The alarm tone sequence (5 beeps) is sounded. | Skin temperature is too high. | Check that the sensor is correctly attached to the patient.<br>Switch off external heat sources.<br>Check whether the double wall can be removed. | 2 min |
| **Skin 1 temperature below 36.0 $^{o}$C**<br>(see "Configuration" on page 84)<br>The measured value flashes on the screen.<br>The yellow bar LED on the control unit flashes.<br>The central alarm indicator lights up*.<br>The alarm tone sequence (3 beeps) is sounded. | Kangaroo mode alarm:<br>Skin temperature is falling below the alarm limit.<br>Temperature sensor is incorrectly attached to patient. | Increase heat supply to patient.<br>Check configuration.<br>Check that the temperature sensor is correctly attached to the patient. | 15 min |

* The central alarm indicator can be switched off. See “Setting system parameters” on page 83

| Message | Causes | Remedy | Duration of alarm suppression |
|---|---|---|---|
| **Skin 2 sensor fault**<br>3 flashing dashes on the screen.<br>The red bar LED on the control unit flashes.<br>The central alarm indicator lights up*.<br>The alarm tone sequence (5 beeps) is sounded. | Peripheral temperature sensor is defective. | Replace sensor. | 5 min |
| **Skin 2 temperature above 39 °C**<br>The measured value flashes on the screen.<br>The red bar LED on the control unit flashes.<br>The central alarm indicator lights up*.<br>The alarm tone sequence (5 beeps) is sounded. | Peripheral temperature is too high. | Check that the sensor is correctly attached to the patient.<br>Switch off external heat sources.<br>Check whether the double wall can be removed. | 2 min |
| **Skin 2 temperature below 34.0 °C**<br>(see "Configuration" on page 84)<br>The measured value flashes on the screen.<br>The yellow bar LED on the control unit flashes.<br>The central alarm indicator lights up*.<br>The alarm tone sequence (3 beeps) is sounded. | Kangaroo mode alarm:<br>Peripheral temperature is falling below the alarm limit.<br>Temperature sensor is incorrectly attached to patient. | Check patient's heat exchange.<br>Check configuration.<br>Check that the temperature sensor is correctly attached to the patient. | 15 min |
| **Skin 1 less than 0.5 °C above skin 2**<br>(see "Configuration" on page 84)<br>The measured skin temperature values flash on the screen.<br>The yellow bar LED on the control unit flashes.<br>The central alarm indicator lights up*.<br>The alarm tone sequence (3 beeps) is sounded. | Kangaroo mode alarm:<br>Temperature difference between the skin temperature (yellow) and the peripheral temperature (white) is too low. | Check patient's heat exchange.<br>Check configuration (page 81). | 15 min |
| **Skin 1 more than 4.0 °C above skin 2**<br>(see "Configuration" on page 84)<br>The measured skin temperature values flash on the screen.<br>The yellow bar LED on the control unit flashes.<br>The central alarm indicator lights up*.<br>The alarm tone sequence (3 beeps) is sounded. | Kangaroo mode alarm:<br>Temperature difference between the skin temperature (yellow) and the peripheral temperature (white) is too high.<br><br>Temperature sensor incorrectly attached to patient. | Check patient's heat exchange.<br>Check configuration (page 81).<br><br>Check that the temperature sensor is correctly attached to the patient. | 15 min |
| **Water empty, please refill**<br>The measured value flashes on the screen.<br>The yellow bar LED on the control unit flashes.<br>The central alarm indicator lights up*.<br>The alarm tone sequence (3 beeps) is sounded. | Water supply is empty.<br><br>Air bubble in transfer set. | Top up the water tank to the full level marking.<br>Replace the water bag.<br><br>Remove air bubble from transfer set. | 15 min |

* The central alarm indicator can be switched off. See "Setting system parameters" on page 83

| Message | Causes | Remedy | Duration of alarm suppression |
|---|---|---|---|
| **Weighing scale defective**<br>3 short alarm tones | Weighing scale is defective. | Call DrägerService. | |
| **Wrong oxygen sensor 1**<br>The display flashes on the screen.<br>The red bar LED on the control unit flashes.<br>The central alarm indicator lights up*.<br>The alarm tone sequence (5 beeps) is sounded. | Wrong sensor in the $O_2$ module.<br>No measurement can be performed after replacing the $O_2$ sensor. | Switch off $O_2$ control.<br>Call DrägerService. | 1 min |
| **Wrong oxygen sensor 2**<br>The display flashes on the screen.<br>The red bar LED on the control unit flashe.<br>The central alarm indicator lights up*.<br>The alarm tone sequence (5 beeps) is sounded. | Wrong sensor in the $O_2$ module.<br>No measurement can be performed after replacing the $O_2$ sensor. | Switch off $O_2$ control.<br>Call DrägerService. | 1 min |

* The central alarm indicator can be switched off. See “Setting system parameters” on page 83

# Error – Cause – Remedy

All the errors are listed in the table in **alphabetical** order. See also “Alarm descriptions” on page 138.

| Fault | Causes | Remedy |
|---|---|---|
| **Base frame cannot be set to the tilted position.** | Motor overheating. | Wait for at least 2 minutes. Tilting is possible again for a few seconds (10 %) after this period.<br>The full duty cycle is available only after a pause of 54 minutes. |
| | Motor is defective. | Call DrägerService. |
| **Height adjustment does not switch off.** | Switch defective or loose contact.<br>Motor is defective. | Call DrägerService. |
| **Height adjustment not possible.** | Lifting motor overheating. | Wait for at least 2 minutes. Height adjustment is possible again for a few seconds (10 %) after this period.<br>The full duty cycle is available only after a pause of 54 minutes. |
| | Lifting motor is defective. | Call DrägerService. |
| **Red LED at symbol flashing, intermittent alarm tone is sounded.** | Power failure alarm | Check power supply.<br>– Connect plug to mains power supply.<br>Call DrägerService. |
| **Short beep signal (3x) is sounded.** | While defining a set value, the rotary knob is not pressed within 20 seconds. | Press rotary knob or cancel input. |
| **The red bar LED on the control unit lights up. Continuous audible alarm tone. Audible alarm cannot be muted.** | Serious device faults. | Call DrägerService. |
| **The yellow LED in the alarm button is lit.** | Alarm muting is active. | Switch off alarm muting. |

If the machine does not operate as expected, please call DrägerService!

# Technical Data

**Technical Data** . . . . . 120

Ambient conditions . . . . . 120
Operating data . . . . . 120
Performance data . . . . . 121
Measurement and control parameters . . . . . 121
Dimensions . . . . . 123
Classification . . . . . 124

# Technical Data

## Ambient conditions

**In normal operation**

| | |
|---|---|
| Temperature | 20 °C to 35 °C |
| Atmospheric pressure | 600 hPa to 1060 hPa |
| Rel. humidity | 10 to 95 %, no dew formation |

**For storage / transport**

| | |
|---|---|
| Temperature | –20 °C to 60 °C |
| Atmospheric pressure | 210 hPa to 1060 hPa |
| Rel. humidity | 10 to 95 %, no dew formation |

## Operating data

| | |
|---|---|
| Line voltage connection | 100 V / 110 V / 120 V / 127 V / 220 V to 240 V AC (as per order)<br>50 Hz / 60 Hz |
| Max. current consumption at 100 V | 10 A* |
| Max. current consumption at 110 V | 9.2 A* |
| Max. current consumption at 120 V | 8.7 A* |
| Max. current consumption at 127 V | 9.1 A* |
| Max. current consumption at 220 V | 5.4 A* |
| Max. current consumption at 230 V | 5.5 A* |
| Max. current consumption at 240 V | 5.6 A* |
| Ground leakage current 100 – 127 V / 50 Hz / 60 Hz | 150 µA |
| Ground leakage current 220 – 240 V / 50 Hz | 250 µA |
| Ground leakage current 220 – 240 V / 60 Hz | 300 µA |

Heater power

| Line voltage connection | 100 V/120 V | 110 V/127 V | 230 V | 240 V |
|---|---|---|---|---|
| Air heater max. | 525 W | 588 W | 525 W | 572 W |
| Water heater max. | 147 W | 165 W | 147 W | 160 W |

Integrated socket strip

| | |
|---|---|
| Max. current consumption of all sockets at all power supply voltages | 2 A |

⚠ Max. leakage current:
By connecting devices to the socket strip, the overall leakage current may be increased to an unacceptably high level. Where applicable, national limits must be observed. The operator is responsible for adhering to the overall leakage current.

Europe (IEC / EN 60601-1):

| | |
|---|---|
| Permissible overall ground leakage current | 500 µA |
| Max. ground leakage current of the socket strip | 250 µA at 50 Hz power supply<br>200 µA at 60 Hz power supply |

USA (UL 60601-1):

| | |
|---|---|
| Permissible overall ground leakage current | 500 µA |
| Max. ground leakage current of the socket strip | 350 µA |

Height adjustment and bed-tilt mechanism

| | |
|---|---|
| Duty cycle | 10 % |
| Shut-off mode | 6 minutes ON, 54 minutes pause |

| | |
|---|---|
| $O_2$ inlet pressure | min. 300 kPa, max. 600 kPa |

* Value takes into account current consumption when using the integrated socket strip.

## Performance data

| | |
|---|---|
| Warm-up time | 20 minutes from 20 °C to 31 °C (at 20 °C ambient temperature) |
| Increase in $O_2$-concentration from 21 to 60 Vol.% | <10 min |
| Humidification | Heating of sterilized Aqua dest. or demineralized water |
| Air velocity over the bed | <8 cm / second |
| Fresh air supply | up to 30 L/min |
| $CO_2$ flush, conforming to IEC / EN 60601-2-19 / 105.1<br>Max. available $CO_2$ concentration in the incubator | <0.5 Vol.% |
| Bed-tilt mechanism | Infinitely variable up to 13° ±2° tilt angle on both sides |
| Operating noise inside the hood | 47 ±2 dB(A) |
| Particle filter | NaCl pass volume ≤6 % |

## Measurement and control parameters

The specified values depend on the ambient conditions

**Air temperature control**

| | |
|---|---|
| Measuring principle | NTC, 2 x |
| Measuring range | 13 °C to 42 °C |
| Measurement precision | ±0.8 °C |
| Set value range | 20 °C to 39 °C in 0.1 °C increments* |
| | <28 °C and >37 °C (extendable with confirmation) |

**Skin temperature control**

| | |
|---|---|
| Measuring principle | NTC |
| Measuring range | 13 °C to 43 °C |
| Measurement precision | ±0.3 °C |
| Set value range | 34 °C to 38 °C in 0.1 °C increments |
| | >37 °C (extendable with confirmation) |

**$O_2$ control**

| | |
|---|---|
| Measuring principle | Electrochemical sensor (capillary) |
| Measuring range | 18 Vol.% to 99 Vol.% |
| Measurement precision | ±3 Vol.% |
| Influence | Relative humidity <1.5 % |
| Set value range | 21 Vol.% to 75 Vol.% in 1 Vol.% increments |
| | >40 Vol.% (extendable with confirmation) |
| | With a gas pressure of 400 kPa the actual values are between 65 to 77 Vol.% $O_2$. |

**Humidity control**

| | |
|---|---|
| Measuring principle | Capacitive |
| Measuring range | 10 % r. h. to 99 % r. h. |
| Measurement precision | ±10 % in set value range |
| Set value range | 30 % r. h. to 99 % r. h. in 1 % r. h. increments** |

* The set value must be at least 3 °C above the ambient temperature. At lower ambient temperatures the increased heat loss may prevent high set values (39 °C) being fully attained. Use the double wall.

** The maximum attainable humidity level depends on the air temperature and ambient humidity. At high air temperatures or low ambient humidity, the attainable humidity level in Caleo® is reduced.

**Weighing scales**

| | |
|---|---|
| Measuring range | Max. 10 kg<br>Min. 250 g with taring<br>Min. 0 g without taring |
| Measuring accuracy* (e) | |
| – With taring | 2 g (250 g to 2.5 kg)<br>5 g (2.5 kg to 10 kg) |
| – Without taring | 5 g (0 g to 2.5 kg)<br>10 g (2.5 kg to 10 kg) |
| Resolution (d) | 1 g (0 kg to 10 kg) |

**MEDIBUS interface (optional)**

Dräger communication protocol for medical devices

Serial interface for connecting up to medical devices which comply with IEC/ EN 60601-1, for transmitting the incubator status data (actual values, set values, alarms).

All signals are electrically isolated from the patient section (electric strength 1500 V).

For a detailed description of the interface protocol please see the manual "Dräger RS 232 MEDIBUS Protocol Definition" 90 28 320 (German), 90 28 258 (English) and "MEDIBUS for Dräger Paediatric Devices" 90 29 205 (English)

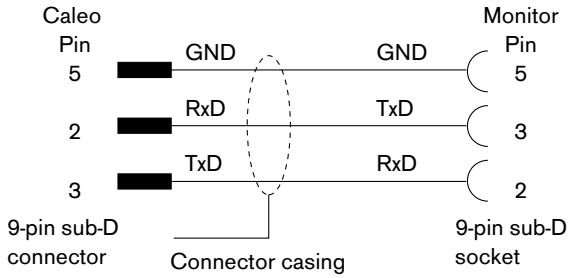


**Service interface (optional)**

For connecting to the Remote Service Box for service purposes

**Nurse call (optional)**

Outlet for the connection to in-house call systems (nurse call)

Connection 3 to 5 will be closed and the nurse call is activated in the event of an alarm with a high risk potential or if there is a serious equipment fault.

Connection 1 to 3 will be closed and the nurse call is not activated in the event of an alarm with a medium or low risk potential or if there is a serious equipment fault.

Potential-free changeover contact

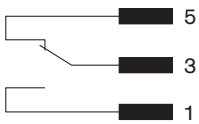


243

**Central alarm (optional)**

Outlet for the connection to in-house call systems (nurse call)

| | |
|---|---|
| Operating voltage | Max. 24 V |
| Current | Max. 250 mA |
| Power | Max. 3 W |

* The measuring accuracy depends on the geological and geographical conditions at the installation site. Calibration before delivery is not sufficient to guarantee the specified accuracy in some regions. On-site calibration is recommended in such cases.

## Dimensions

| | |
|---|---|
| Device (Width x Depth) | 1167 mm x 687 mm |
| Height of overall unit with variable pillar | 1220 mm to 1520 mm |
| Height of overall unit with fixed pillar | 1270 mm / 1370 mm / 1470 mm |
| Height of mattress surface (variable height) | 800 mm to 1100 mm |
| Height of mattress surface (fixed height) | Optionally 875 mm, 950 mm or 1050 mm |
| Bed (Width x Depth) | 645 mm x 500 mm |

**Weight**

Overall weight

| | |
|---|---|
| max. | 230 kg |
| Basic equipment | 130 kg |
| Total load | 66 kg |

**Overview of max. loads.**

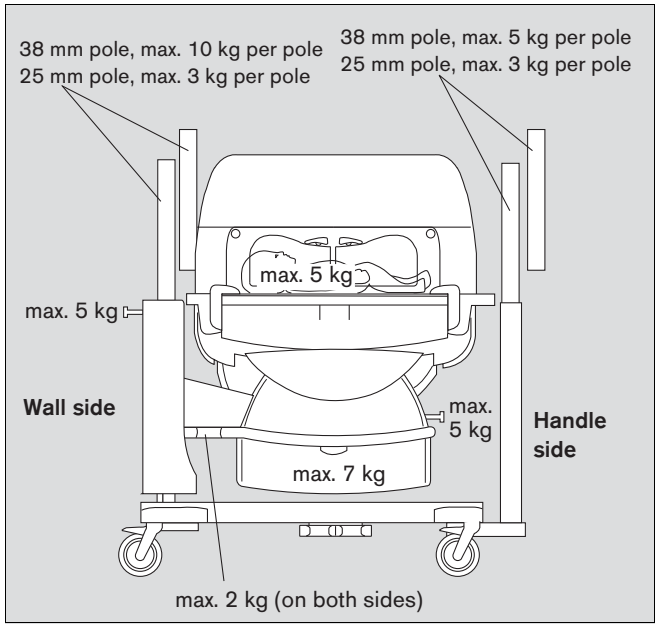


or alternatively

with installed monitor shelf (2M 50 085).

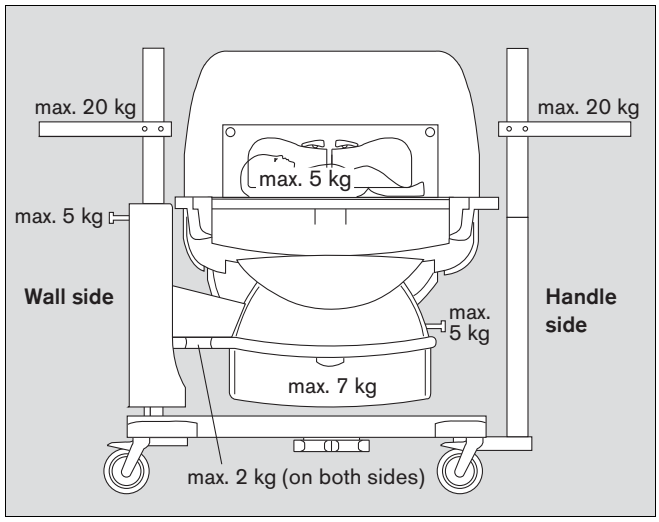

## Classification

| | |
|---|---|
| According to EC Directive 93/42/EEC Appendix IX | Class IIb |
| Classification of the described accessories<br>According to EC Directive 93/42/EEC Appendix IX | Class I |
| **UMDNS code**<br>Universal Medical Device<br>Nomenclature System | 12-113 |
| Protection class | I, Type BF |
| Standards | Device conforms to<br>– IEC / EN 60601-1,<br>– IEC / EN 60601-1-2<br>– IEC / EN 60601-2-19 |

# Description

**Description** . . . . . 126

Operating principle . . . . . 126
Accessibility . . . . . 126
Bed and mattress . . . . . 127
Twins in Caleo® (Caleo® Twincubator™) . . . . . 127
X-rays . . . . . 128
Weighing scale . . . . . 128
Airflow routing . . . . . 129
Air temperature control . . . . . 129
Skin temperature measurement . . . . . 130
ThermoMonitoring™ . . . . . 130
Skin temperature control . . . . . 131
Kangaroo mode . . . . . 132
$O_2$ enrichment . . . . . 134
Humidity control . . . . . 135
Cleaning Mode . . . . . 136
Safety systems . . . . . 137
Alarm descriptions . . . . . 138
Key to the symbols used . . . . . 139
Labelling . . . . . 140

**Order List** . . . . . 143

**Parts List** . . . . . 146

# Description

## Operating principle

Caleo® is an incubator for premature babies and sick neonates up to a body weight of 5 kg and a body length of 55 cm. Inside the Caleo® the patients are supplied with a controlled amount of heat and, if necessary, humidity* and oxygen*. The user can adjust the climate to the requirements of the patient with respect to air temperature, humidity* and oxygen content*. The patient capsule acts as a specially protected zone for the patient. The ambient air is therefore filtered before it enters the interior.

## Accessibility

Caleo® provides excellent accessibility to the patient for all normal and intensive care requirements: for this purpose, the four access ports (two on each longitudinal side) have been designed with especially large dimensions (Caleo® JumboPorts™).
The two longitudinal sides can be completely folded down. In addition, two smaller side flaps at the head and foot ends of the patient can be folded down. If necessary, the canopy can also be propped up from two different sides or can be fully removed in an emergency – in order to provide free accessibility to the patient from above.

A total of ten generously dimensioned hose through-hole sleeves ensure clear organisation and routing of hoses and cables through the incubator. Each corner has two such sleeves, which can be easily removed, especially during "Kangarooing" (where the patient rests in direct contact on the mother's or father's chest), to ensure clearly manageable cable and hose routing even when the patient is outside the patient capsule. Two other large tubing ports are located in the side flaps at the head and foot end. In addition, the canopy contains an aperture, e.g. for feeding the patient.

* optional equipment feature

## Bed and mattress

The bed is very wide and it offers sufficient space to the patient: For routing hoses, using support and positioning aids, for the treatment of twins in a single incubator and for turning over the patient, e.g. for reintubation in the incubator.
To prevent decubitus, an extra-soft mattress is used (SoftBed® Caleo®*).
The bed can be taken out if the front flap is open. It can be electrically tilted in order to obtain either a head-up position (Trendelenburg position) or head-down positon (±13°).

## Twins in Caleo® (Caleo® Twincubator™)

Twins can be placed together in Caleo® if there are no medical objections and if their total combined weight does not exceed 5 kg. When treating twins in an incubator, Caleo® must be run in air control mode.
The treatment of twins together in a single incubator can help to prevent post-natal separation trauma. Direct skin contact between the twins can have positive effects on the development of the patient, as is the case with "Kangaroo" mode (see page 132). If necessary, the incubator air temperature may have to be reduced, because the patients mutually warm each other by direct contact and would therefore risk overheating.

During operation in air temperature mode, the skin temperature of the first patient can be monitored with the yellow temperature sensor, whilst the second temperature channel (white probe) can be used to monitor the skin temperature of the second patient.

Possible dangers when treating twins in a single incubator may occur e.g. from the risk of mutual infection or of confusing the patients when administering medicines or foods.
Take the appropriate protective precautions when using X-rays.
If twins require different ambient temperatures or an ambient air with different oxygen or humidity saturation levels, the patients should be treated in two separate incubators.

* see Caleo® Accessories range

## X-rays

With the X-ray drawer, which is accessible from outside, the patient can be X-rayed in the incubator without having to be removed or lifted. The X-ray drawer can be pulled out without having to open the Caleo® front flap. Unnecessary disturbance of the patient is therefore avoided. A grid is provided on the X-ray drawer to help align the X-ray cassette.

## Weighing scale*

With the optionally fully integrated incubator weighing scale, the weight of the patient can be determined without having to remove the patient from the protective climate of the incubator. Even with the built-in scales, the use of the X-ray drawer remains possible. To weigh, the patient must be lifted once in order to reset the scales to a zero point. The patient can then be placed back on the mattress. The current and previous weight are displayed for information. The results of the last 30 weighs can be graphically represented in the trend display.

Weighing without lifting the patient again (without new tare measurement) is possible. This option is useful when the weight has to be taken again for checking purposes shortly after the first weigh, or if e.g. the weight with or without nappy or with full and empty nappy has to be determined. The entire weighing procedure is accompanied by short audible signals, so that the operator's full attention can be paid to the patient.

When weighing the patient inside an incubator, take care to ensure that hoses and cables are not jammed in the bed or distort the weight measurement. If the weight is determined with hoses and cables, the best results are obtained if the hoses and cables are removed from the ventilation hose holder of the bed and laid on the surface of the bed as horizontally and as strain-free as possible.

The weighing scale in the Caleo® comprises four weighing elements located underneath the bed, an electronic measuring and analysis unit and a special page on the control monitor. In normal mode, the entire bed rests on these four weighing elements under the bed. A safety system prevents the weighing elements being damaged if loads of more than 10 kg are applied. When removing the bed, it should be raised slightly by turning two fixing knobs so that it can then be pulled out smoothly.

* optional equipment feature

## Airflow routing

The heated and humidified air flows into the hood from both sides. It is guided up the inside of the front flap, along the canopy and then down the two transverse sides by suction. The air from the interior is mixed with fresh ambient air by an air filter and is circulated by a fan impeller. Along this path, the air is channelled past an electrically powered heater and is humidified if necessary*.
The patient lies in a calm zone with low airflow speeds.
Heat loss due to flow is kept to a minimum. When opening the large flaps or access ports (Caleo® JumboPorts™), an efficient hot air curtain remains to prevent cooling in the patient capsule.

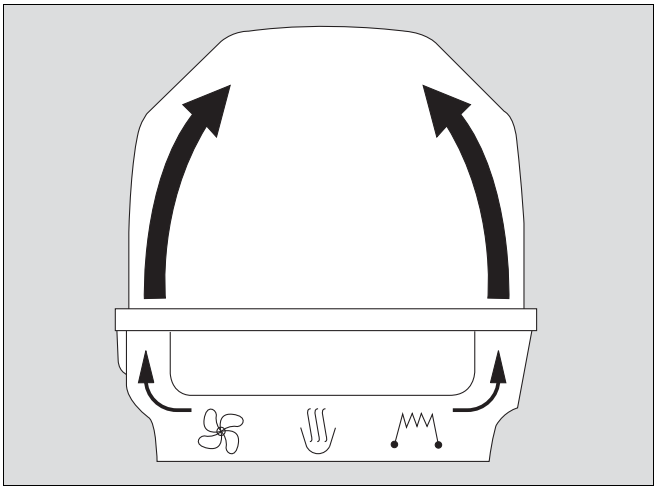


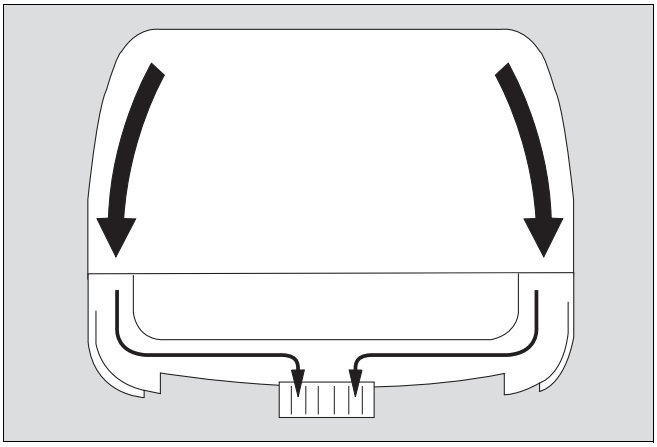


## Air temperature control

The user sets the desired air temperature in the patient capsule by means of the control panel (set value for air temperature in air temperature mode).
The current air temperature is measured by the air temperature sensor in the patient capsule (at the patient's head end of the incubator) and is then compared to the set value.
If the set value is greater than the actual measured air temperature, the heater receives the signal to apply more heat.
The air temperature inside Caleo® therefore increases.
If the set value is lower than the actual measured air temperature, the heater receives the signal to apply less heat.
The air temperature inside Caleo® drops.
If the current air temperature deviates from the set value by more than ±1.5 $^{o}$C** an alarm is triggered.
The audible signal of this alarm can be muted by the user.
As soon as the deviation in the measured air temperature is within ±1.5 $^{o}$C** of the set value (see above), the alarm is cancelled.

* optional equipment feature
** other configurations possible

**Caleo® temperature control characteristics**

The desired temperature increase is achieved rapidly due to the high heating power. A temperature reduction takes longer, due to the good thermal insulation of the incubator.

**Note on setting the air temperature set value in the Caleo®:**

The patient has limited

- heat loss due to airflow, because the airflow rate above the mattress is low.
- heat loss through the mattress, because the mattress is well insulated.
- heat loss due to evaporation, provided that humidity* is set relatively high (greater than 60 %).
- heat loss due to radiation, provided that the double wall** is installed.

## Skin temperature measurement

Two skin temperature sensors can be connected to measure the skin temperature (yellow skin temperature sensor) and peripheral temperature (white skin temperature sensor). The measured value of the yellow skin temperature sensor is used to regulate the incubator heater in "skin temperature control mode".

## ThermoMonitoring™

The term ThermoMonitoring™ refers to the continuous measurement and display of a central temperature and a peripheral temperature. Instead of the central temperature, a near-core skin temperature can be used, as is the case e.g. during skin temperature control at the incubator.

The continuous display of the difference between these two temperatures permits early detection of the occurrence of cold stress. Heat stress, thermoregulation problems and e.g. infections can also be more rapidly detected by displaying the two temperature values and evaluating their difference.

Consequently, Caleo® provides the possibility of switching between a standard screen with large numeric digits and a trend screen showing the trend graph of a maximum of two temperatures. In this way, the difference between near-core skin temperature and peripheral temperature required by ThermoMonitoring™ can be displayed continuously.

In addition, by means of trend analysis, values from the past can be called up for subsequent explanation, e.g. the onset of sickness symptoms or the development of hypothermal stress.

---

* optional equipment feature
** see Caleo® Accessories range

Values going back a maximum of seven days in the past can be accessed. In addition, the desired time range can be set (between 3 hours and seven days).

With the "Trend Main Page" option selected from the main menu, the user can preconfigure which trend to display when switching over between numerical display and trend display.

In addition to displaying the two skin temperatures, the display can show the following parameters: air temperature, humidity*, oxygen* and the weight*, with a memory of up to 30 weight readings.

## Skin temperature control

Caleo® is operated in skin temperature mode, this mode can be set on the control unit. At least the yellow skin temperature sensor (skin 1) must be plugged in and correctly attached to the patient.
The user sets the set value for the skin temperature on the control panel. The actual skin temperature of the patient is measured by the yellow skin temperature sensor (skin 1) and compared with the set value.

The difference between the set value and the measured actual value is used to control the air temperature in Caleo® between a minimum of 20 °C and a maximum of 39 °C.
If the set value is greater than the currently measured skin temperature (skin too cold), the heater receives a signal to supply more heat. The air temperature in Caleo® rises, thereby also increasing the skin temperature of the patient.
If the set value is lower than the actual measured air temperature (skin too hot), the heater receives a signal to apply less heat. The air temperature inside Caleo® drops, thereby also reducing the skin temperature of the patient.

The longer the deviation between the set value and the actual measured value persists, the more powerfully heat is supplied by the heater (if the skin is too cold) or the more the air temperature in Caleo® is reduced (if the skin is too hot).

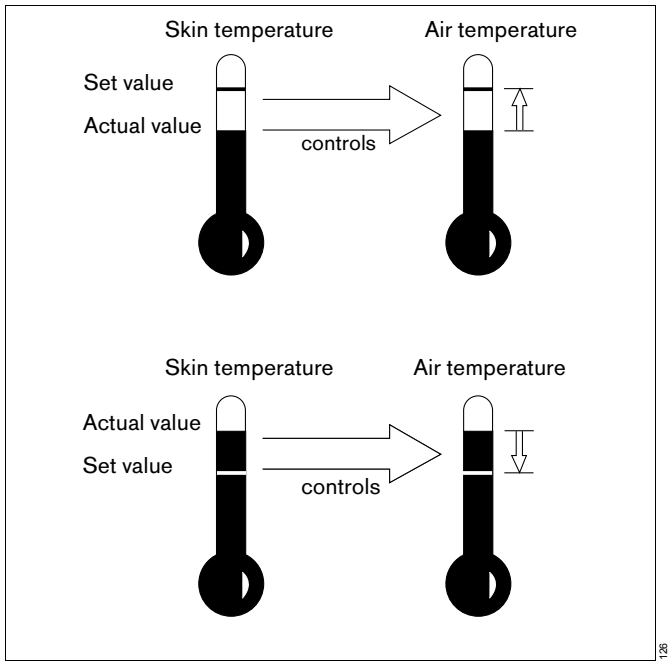


**Waiting for the controller to settle.**

The patient's skin temperature varies frequently, e.g. due to food intake or medical care. Deviations of a few tenths of a degree are normal.
For this reason:
Only change the set value of the skin temperature if the core temperature needs to be changed.
If the actual temperature deviates from the set skin temperature by more than ±0.5 °C**, an alarm is sounded.
This audible alarm can be muted by the user. As soon as the measured value deviates from the set value by less than ±0.5 °C** (see above), the alarm is deactivated again.

* optional equipment feature
** other configurations possible

## Kangaroo mode

Kangaroo mode (Caleo® KangarooMode™) simplifies the operation of the incubator when the baby is removed to have direct skin contact with the mother or father ("Kangarooing"). This mode provides the user with extended monitoring functions in order to detect overheating and overcooling of the patient even when the patient is outside the patient capsule.

Other Caleo features designed to ensure easier removal of the patient from Caleo® for "Kangarooing":
– the removable tubing grommets (sleeves) in the corners of the incubator,
– the facility to lower the patient's bed by up to 80 cm (with the variable "height adjustment" option),
– the minimal space requirement of the fold-down front flap of the Caleo®.

The incubator is switched over to Kangaroo mode on the control panel after pressing the "Menu" key.
Once Kangaroo mode is activated, the following functions are automatically activated:

- **Switchover to "Standby" mode**

Since the baby is no longer inside Caleo® during "Kangarooing", the baby's skin temperature should no longer be used as a measure for controlling the air temperature inside the incubator. Instead, the incubator should be set up so that after terminating "Kangarooing" and putting the patient back inside Caleo®, the incubator should already be heated to the same temperature and climate as when the baby was taken out of the incubator. Consequently, during "Standby" mode, the following logic is applied:
If Caleo® was previously operated in skin temperature mode, it is switched over to air temperature mode for the duration of Kangaroo mode. The set value for the air temperature is automatically set to the average air temperature over the last three minutes. The previous set value for the skin temperature is stored in buffer memory.
If Caleo® was previously operated in air temperature mode, the setting remains unchanged.

- **Automatic alarm muting**

Since, generally, after switching over to Kangaroo mode the user opens the flap and takes the baby out of the incubator, alarms triggered by opening the flaps are no longer meaningful. Consequently, all alarms that would normally be activated by opening the large flaps are automatically suppressed for the next 4 minutes – see page 68.

- **Activation of special Kangaroo mode alarms**

During Kangarooing, the skin (and core) temperature of the patient is frequently found to rise. However, in some cases, the patient is cooled. Consequently, the core or skin temperature patient must be regularly monitored. In order to perform this monitoring with as little nuisance as possible to mother/father and baby, Caleo® provides the facility for activating special Kangaroo mode alarms during operation in Kangaroo mode. These alarms are set in the configuration. The following alarm limits are set:

– Lower alarm limit for the skin temperature. (Skin 1; T1) = skin alarm T1 min.
– Lower alarm limit for the peripheral temperature. (Skin 2; T2) = skin alarm T2 min.
– Lower alarm limit for the difference between T1 and T2 = Alarm ΔT min.
– Upper alarm limit for the difference between T1 and T2 = Alarm ΔT max.

These kangaroo alarms have the following significance:

Skin T1 min. alarm
The alarm is triggered as soon as the skin temperature (T1, yellow skin temperature sensor) falls below the set value.

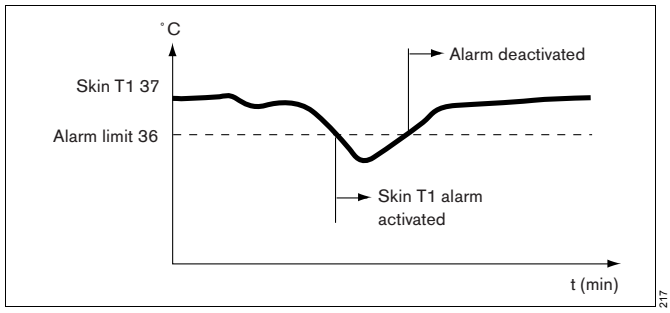


Skin T2 min. alarm
The Skin T2 min. alarm is triggered as soon as the peripheral temperature (T2, white skin temperature sensor) falls below the set value.

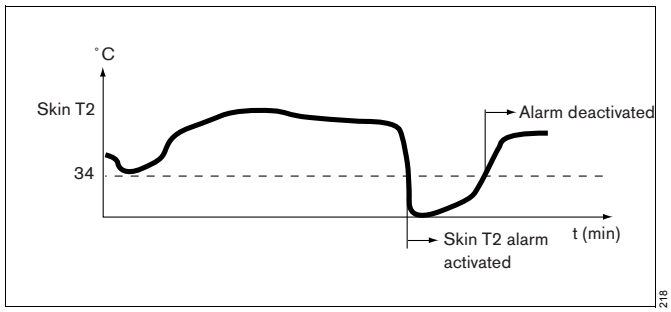


ΔT min. alarm
The alarm is triggered if the difference between Skin T1 and Skin T2 is less than the set value (risk of hyperthermia).

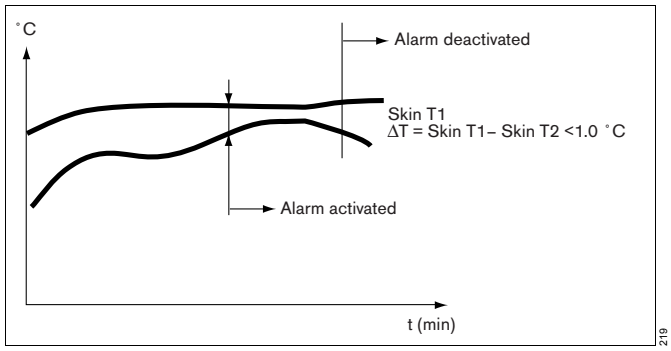

ΔT max. alarm

This alarm is triggered if the difference between Skin T1 and Skin T2 is above the set value (risk of hypothermia).

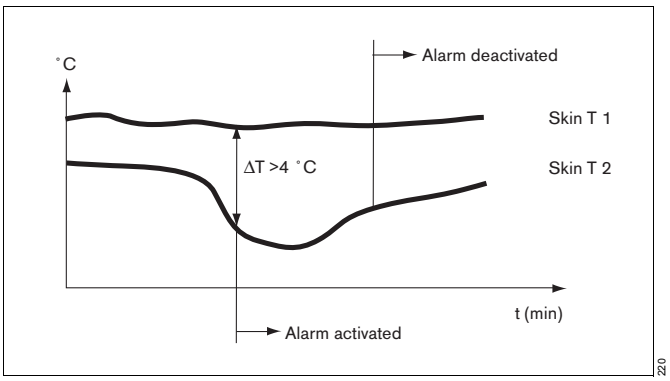


Each of these alarms can either be set or switched in advance to "OFF".

However, immediately after switching over to Kangaroo mode, automatic alarm muting is activated for the first four minutes, including for all special Kangaroo alarms, in order to give the patient time to adapt to the new environment.

## $O_2$ enrichment

When adjusting the oxygen concentration in the patient capsule, the additional oxygen supply is metered by a micro-processor-controlled valve.

The oxygen is thereby channelled into the air routing system, so that it is heated and humidified with the air.

## Humidity control*

Caleo® provides the possibility for hygienic humidification of the incubator air. In this system, water is supplied from a separate water container (water bag or water tank) and heated.
With closed-loop humidity control, the desired relative humidity is set, and Caleo® then automatically regulates the evaporator output of the humidifier.
Caleo® can control the humidity in two ways:

– By manual input of the desired relative humidity or
– Automatic humidity control (AUTO humidity).

### Manual humidity control

A value between 30 % and 99 % relative humidity can be set. The actual humidity concentration is measured by the humidity sensor in the patient capsule
(integrated in the sensor module at the patient's head end of the capsule).
If the set value is higher than the actual measured relative humidity (air too dry), the humidifier receives a signal to allow more water vapour into the patient capsule. The relative humidity inside Caleo® therefore rises.
If the set value is lower than the actual measured relative humidity (air too humid), the humidifier receives a signal to allow less water vapour into the patient capsule.
The relative humidity inside Caleo® therefore falls.

### AUTO humidity

When AUTO mode is set, the set value for the relative humidity is calculated and set automatically by the system as a function of the air temperature (see graph).
This function is based on the observation that small and relatively immature patients require both a higher air temperature and higher relative humidity than larger patients. Consequently, in AUTO mode, the set value for relative humidity is calculated and set as a function of the air temperature. The lower the air temperature setting, the lower the set value for relative humidity.

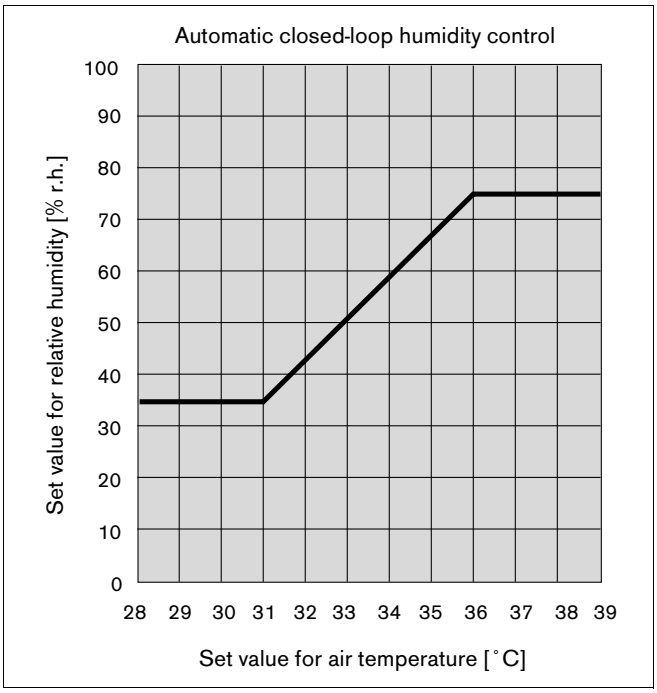


* optional equipment feature

## Cleaning Mode*

Cleaning mode is only available if Caleo® is equipped with humidity control.
The Cleaning Mode (Caleo®CleanSwitch™) simplifies the cleaning of Caleo®. The Cleaning mode must be used after ending operation of Caleo® (see page 78), after the water supply has been disconnected (see page 98).

Cleaning mode may only be used if Caleo® is empty.

Cleaning mode is activated on the control panel after pressing the "Menu" key and selecting the "Cleaning Mode" option.

In Cleaning mode, the water heater is made to run dry. For this purpose, the humidifier is heated to above 100 °C, so that all remaining water in the humidifier is evaporated. After the residual water has been evaporated, the temperature in the humidifier is maintained for another approx. 10 min at above 100 °C. Then the humidifier is allowed to cool down.
During or after cleaning mode, condensation may form under the aggregate housing of the Caleo®!
When there is no longer any danger of burns for the user, a message is displayed on the screen to inform the user that Cleaning Mode is complete and that the incubator can be dismantled for disinfecting and cleaning (see "After completing cleaning mode" on page 98).

* optional equipment feature

## Safety systems

After switching on the incubator, a self-test is performed to test all memory addresses of the microprocessor control system and the fault-free running of the program segments.

The functions of the control elements and feedback messages are tested by switching on and off. This test is also performed at ten-minute intervals during operation. In this test, all modules installed in the incubator are tested. Any error message will be displayed even when the defective module is switched off.

Any unauthorised operating state will cause Caleo® to switch off the heater or water heater as a safety precaution.

An additional temperature sensor in the hot air duct restricts the heat output in cases where the control loop would otherwise operate the heater at full power for a long period. Typical situations include e.g. flaps opened for a long period, high set values (39 $^{o}$C) at low ambient temperatures (<22 $^{o}$C) or a partly covered hot air duct.

This safety system considerably reduces the risk of burns caused by excessive heating of the surfaces next to the air outlet or by the hot air stream itself.

## Alarm descriptions

**Visual signals on the control panel**

**1** Red bar LED*
**2** Yellow bar LED**
**3** Red LED next to the symbol

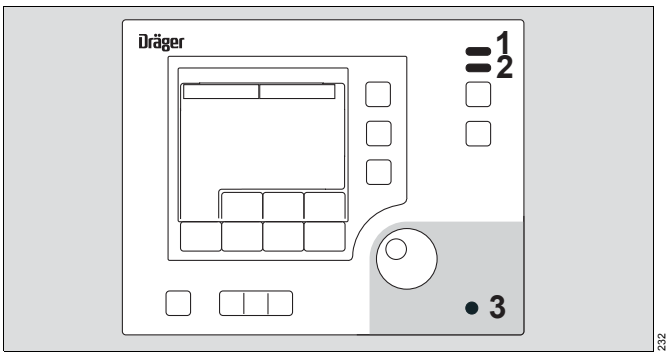


232

Caleo® distinguishes between 5 different alarm priorities:

**Serious device faults**

**Device fault:**

- Continuous tone that cannot be muted, and
**1** Red bar LED lights up.

248

**Power failure:**

- Intermittent alarm tone that cannot be muted, and
**3** the red bar LED next to the symbol lights up.

233

**Warning (highest danger level)**

- Alarm tone sequence (5 beeps), which can be muted,
**1** Red bar LED flashes,
- Central alarm indicator lights up*** and
- Measured value flashes.

For example:
– Skin 1 temperature above 39 °C

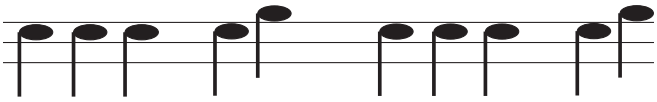

249

**Caution (medium danger level)**

- Alarm tone sequence (3 beeps), which can be muted,
**2** Yellow bar LED flashes,
- Central alarm indicator lights up*** and
- Measured value flashes.

For example:
– Air temp. deviation above 1.5 °C

250

**Advisory (low danger potential)**

- Alarm tone (1x), which can be cancelled.
**2** Yellow bar LED lights up,

For example:
– Adjust. inoperable

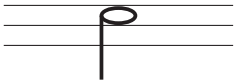

259

**Indication of extended setting ranges**

– No alarm tone
**2** Yellow bar LED lights up,

For example:
– Extended temperature range >37 °C is activated.

---

* Warning – immediate action is required
** Caution – rapid action is required
*** The central alarm indicator can be switched off.
See "Setting system parameters" on page 83

**Information**

No bar LED lights up, no acoustic alarm signal
For example:
– Humidity deviation above 10 %.

Information messages on the active alarm are displayed on screen.

If another alarm occurs while the alarm tone is muted, the alarm tone will be reactivated.
See "Alarm suppression" on page 87

**Central alarm indicator**

**1** The central alarm indicator lights up when an alarm occurs.

**1** The central alarm indicator does **not** light up with an alarm if
– the alarm muting key is pressed, or
– the central alarm indicator has been deactivated in the Configuration. See "Setting system parameters" on page 83.

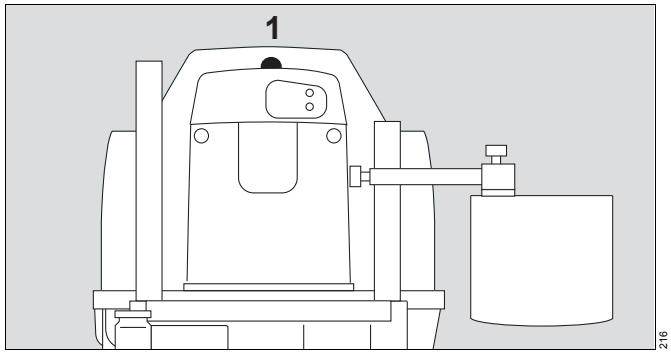


## Key to the symbols used

Alarm suppression

Cancel, stop setting procedure

Weighing scale

Bed tilt

Bed can be pulled out

Radioscopy, X-ray drawer can be removed

Caution: please note special information on this function in the Instructions for Use.

Type BF

Information

Please wait. Function will be activated shortly.

Disable keypad

Waiting for input from rotary knob

Day and Night

Measurement range overflow, see page 90

Nurse call

## Labelling

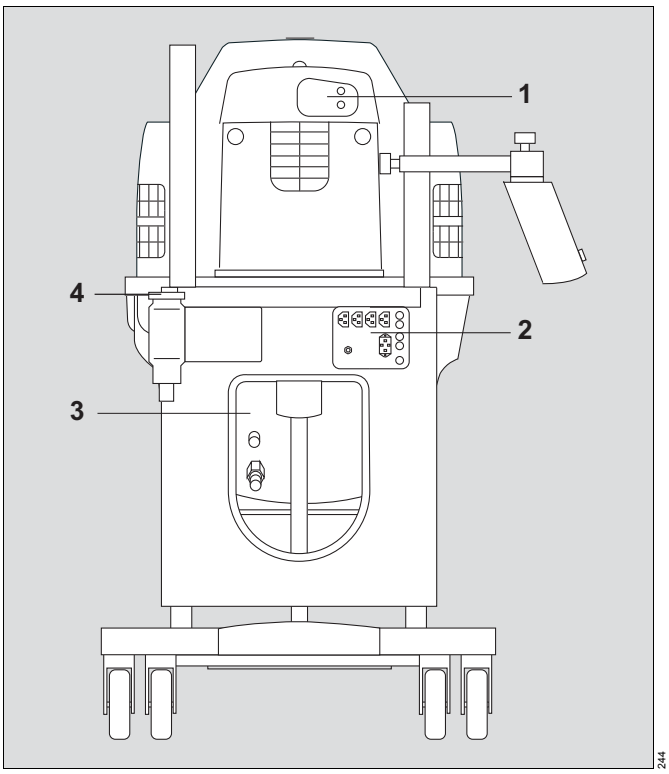


**1**

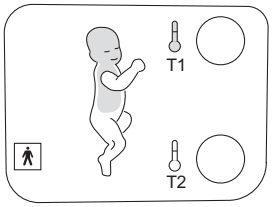


Connections for skin temperature sensors, page 49

**2**

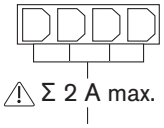


Auxiliary power sockets, page 29, Technical Data, page 120

T 2 H 250V IEC127-2/V

Type designation for fuses for auxiliary power sockets

F 10A UL 248-14

Type designation for system fuses

Equipotential bonding

On/off switch, page 32

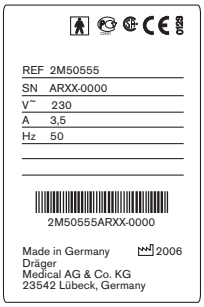


Nameplate

**3**

300 kPa min.
600 kPa max.
$O_2$

page 19

**4**

⚠ Aquadest

page 28

**1** Never leave baby unattended when doors are open ! — page 32

**2** Do not tilt the canopy forward, page 34

**3** ⚠WARNING! Never block or obstruct air vents! Risk of burning! — page 9 and page 129

**4** Always close X-ray tray tightly ! — page 24

**5** max 5 kg, 11lbs — page 123

**6** max 7 kg, 14lbs — page 123

**7** Use max. 6 min. within 60 min. — Do not place any objects on the base plate, page 26

**8** — page 27

**9** 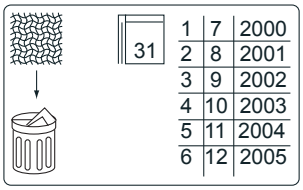

| | | |
|---|---|---|
| 1 | 7 | 2000 |
| 2 | 8 | 2001 |
| 3 | 9 | 2002 |
| 4 | 10 | 2003 |
| 5 | 11 | 2004 |
| 6 | 12 | 2005 |

31 — page 96

**10** ⚠ Aquadest — page 28

**11** Max 2.5/10 kg
Min 250 g
e 5/10 g
d 1/1 g — page 122

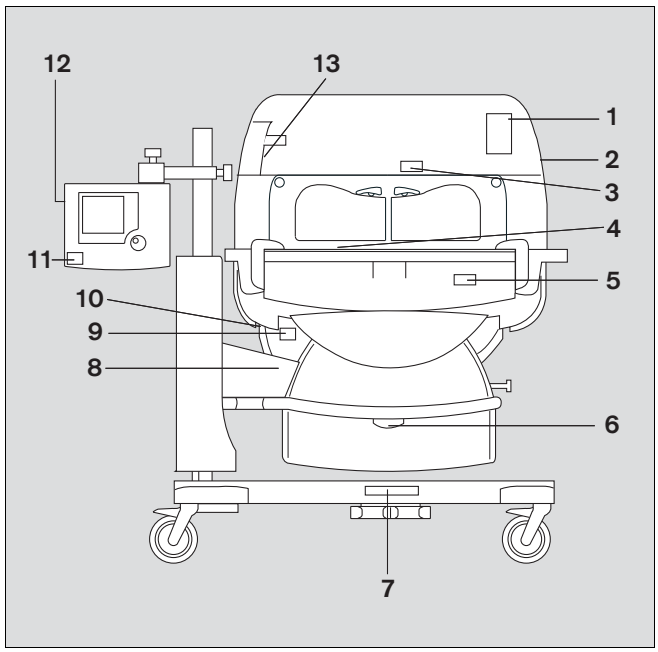


**12** Batt.: VARTA Lithium 3V CR 2NP — Internal battery, page 106

⚠ MEDIBUS ⚠ Service — Interface connections, page 122

**13** No spray disinfection! Wipe disinfection only! — page 105

(inside)

Switch off device and allow heater to cool down for 90 min. before touching the surface! — page 43, page 98

| | | |
|---|---|---|
| **1** | | Castor without brake function, page 26 |

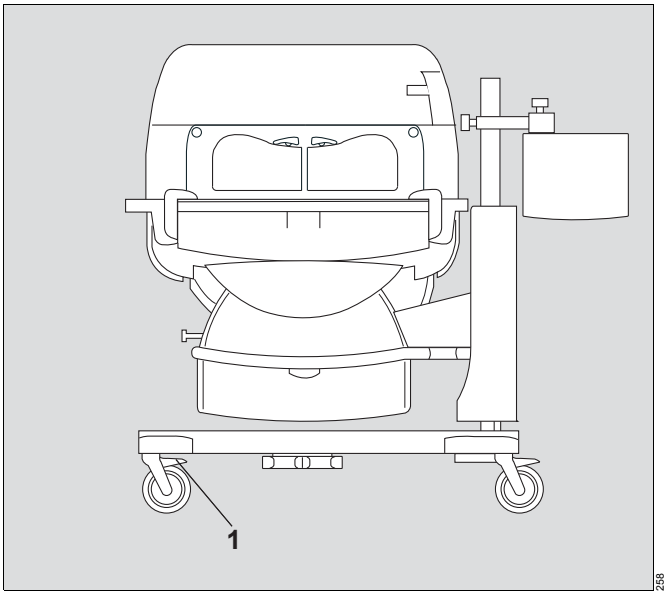

# Order List

| Designation and description | Part No. |
|---|---|
| **Caleo®** | 2M 50 555 / |
| Air/skin control, ThermoMonitoring™ (optional temperature sensors), with large, side flaps that can be folded down at the front and back, 6 extra-large jumbo ports, canopy adjustable and detachable on both sides, electronic bed adjustment (±13°), 10 extra large tubing grommets, integrated X-ray cassette drawers, integrated socket strip for 4 consumers, large graphical EL-display panel with rotary knob, trend functions and large numerical display, central alarm indicator | 2M 50 000 |
| **Options** | |
| Trolley with fixed height | Feature |
| Trolley with variable height | Feature |
| Humidity control | Feature |
| $O_2$ control | Feature |
| Double wall | Feature |
| Weighing scales, integrated | Feature |
| Drawer | Feature |
| Interface (2xRS232, 1x Nurse call) | Feature |
| Caleo canopy set | Feature |
| Caleo canopy set HFV | Feature |
| **Accessories for servo controlled oxygen** | |
| $O_2$ central supply system hose 3 m NIST EN-DIN | M35490 |
| $O_2$ central supply system hose 5 m NIST EN-DIN | M35491 |
| $O_2$ central supply system hose 3 m NIST Neutra DIN | M36005 |
| $O_2$ central supply system hose 5 m NIST Neutra DIN | M36006 |
| Adapter $O_2$ DIN/NIST | M32366 |
| Adapter $O_2$ NIST/NF coupling | M35336 |
| $O_2$ central supply system hose 3 m DIN BL | M29231 |
| Oxygen CS hose 5M DIN BL | M29251 |
| Adapter $O_2$ NIST/DIN | M32493 |
| MiniOx 3000 | 2M22464 |

| Designation and description | Part No. |
|---|---|
| **Shelves, holders, infusion accessories** | |
| Monitor shelf | 2M 50 085 |
| Swivel table | 2M 21 186 |
| Pole 38/600 | 2M 50 691 |
| Pole 38/310 | 2M 50 688 |
| Pole 25/600 | 2M 50 689 |
| Basic pole | 2M 50 680 |
| Infusion support, 38 mm pole | 2M 21 514 |
| Rail-mounted infusion support | M 20 790 |
| Compact rail | 2M 85 337 |
| Tray 3020 | M 24 678 |
| | |
| **Accessories for bed area** | |
| Hose holder for ventilation hoses | 84 11 075 |
| Caleo® SoftBed™ | MX 17 012 |
| Fixation Set Caleo® (France only) | 2M 50 080 |
| | |
| **Accessories for secretion aspiration** | |
| Bronchial aspiration, –0.5 bar | 2M 85 125 |
| O2/Air connection hose, 3M (black) | M 29 245 |
| O2/Air central supply system hose 3 m NIST Neutra DIN | M36017 |
| O2/Air connection hose, 5M (black) | M 29 265 |
| O2/Air central supply system hose 5 m NIST Neutra DIN | M36018 |
| Adapter NIST/DIN | M32497 |
| O2/Air central supply system hose, 3M DIN | M 29 243 |
| O2/Air central supply system hose 3 m NIST EN-DIN | M36002 |
| O2/Air central supply system hose, 5M DIN | M 29 263 |
| O2/Air central supply system hose 5 m NIST EN DIN | M36003 |
| O2/Air adapter | M32497 |
| Wire basket 510 | M 24 670 |
| Wire basket 150 | M 26 146 |
| Wire basket 300 | M 26 145 |
| Wire basket 600 | M 25 121 |
| Holder for litter bags | M 24 695 |
| Set of 100 litter bags | M 26 240 |
| | |
| **Accessories for phototherapy** | |
| Phototherapy 4000 (220-240 V) | 2M 21 000 |
| Phototherapy 4000 (110-127 V) | 2M 21 700 |
| Phototherapy 4000 (100 V) | 2M 22 090 |
| Stand for phototherapy unit 4000 | 2M 21 190 |

| Designation and description | Part No. |
|---|---|
| **Accessories for care** | |
| Cally | 2M 30 462 |
| DC starter pack Caleo | 2M 30 478 |
| "Hug it" positioning aid | 2M 30 468 |
| "Caleo" incubator hood | 2M 30 467 |
| Positioning aid Nesting | 2M 30 474 |
| Positioning aid set | 2M 30 476 |
| **Spare parts and wearing parts** | |
| Caleo canopy | 2M 51 108 |
| Feeding grommet plug | 2M 51 109 |
| Double wall, complete | 2M 51 150 |
| Water tank set, complete | 2M 50 040 |
| Cap for the water tank | 2M 50 042 |
| Nozzle for the water tank | 2M 50 039 |
| Transfer set | MX 17 018 |
| Caleo® Fresh air filter (20 pcs) | MX 17 015 |
| 5 ThermoTrace™ skin temperature sensors, yellow | MX 11 000 |
| 5 ThermoTrace™ peripheral temperature sensors, white | MX 11 001 |
| Adhesive pads ThermoPad™ (set of 50) | MX 11 002 |
| Oxy-Trace™ Incu. | MX 01 050 |
| Tubing grommets, large | 2M 50 385 |
| Tubing grommets, flap | 2M 50 412 |
| Caleo® SoftBed™ | MX 17 012 |
| Vacuum mattress | 2M 17 909 |
| Lithium batteries, 3V/1400 mAh | 18 35 343 |
| Cally | 2M 30 462 |
| | |
| **Upgrade kits** | **2M 50 900** |
| Humidity control | 2M 50 735 |
| $O_2$ control | 2M 51 092 |
| Weighing scales, integrated | 2M 50 745 |
| Caleo canopy | 2M 51 108 |
| Double wall, complete | 2M 51 150 |
| Drawer | 2M 50 565 |
| Interface, RS 232 | 2M 50 750 |
| Hose fixing device (optional) | 2M 51 140 |
| | |
| Technical Documents | on request |

# Parts List

As an alternative to the part numbers listed in the Order List, the following parts and devices, which are no longer supplied by Dräger, may be used.

| Designation and description | Part No. |
|---|---|
| Babyguard | 57 70 025 |
| PT 8000 | 2M 20 520 |
| PT 800 | 2M 18 800 |
| Bronchial aspiration system | 2M 85 041 |
| Hose holder | 2M 19 630 |
| Stand for phototherapy | 2M 18 780 |
| $O_2$ distributor with cylinder connection | 2M 18 828 |
| Oxydig, $O_2$ measuring and warning device, including sensor capsule | 83 04 411 |
| Adhesive pads | 2M 21 735 |

# Index


Access port ... 20
Accessibility ... 126
Activate the self-test ... 36
Activating ... 44
Air temperature control
- Adjusting the set value ... 45
- Alarms ... 48
- Description ... 129
- Using ... 45

Airflow routing, Description ... 129
Alarm descriptions ... 138
Alarm limits ... 85
Alarm suppression ... 87
Alarm suppression mode ... 87
Ambient conditions ... 120
AUTO humidity, Description ... 135

Basic pole ... 16
Bed
- Removing ... 23
- Setting to the horizontal position ... 27
- Tilting ... 27

Before every use ... 32
Before First-time Use ... 32
Before reusing for a patient ... 103
Before using for the first time ... 14
Bronchial aspiration system ... 16

Cancel, stop setting procedure ... 139
Canopy ... 22
Care intervals ... 105
Cause ... 112, 118
Central alarm indicator ... 139
Changing over between air/skin temperature control ... 51
Check power failure alarm ... 37
Check readiness for operation
- Bed ... 36
- Bed-tilt mechanism ... 37
- Fresh air filter ... 38
- Height adjustment mechanism ... 37
- Power failure alarm ... 37
- Self-test ... 36

Classification ... 124
Cleaning ... 105
Cleaning Mode ... 78
- Description ... 136

Compact rail ... 16
Configuration ... 81
- Alarms ... 84
- Language/date/time ... 82
- $O_2$ sensor information ... 86
- Software information ... 86
- System parameters ... 83

Control panel ... 10, 14

Day and Night ... 66
Description
- Accessibility ... 126
- Air temperature control ... 129
- Airflow routing ... 129
- Alarms ... 138
- Auto humidity ... 135
- Bed and mattress ... 127
- Central alarm indicator ... 139
- Cleaning Mode ... 136
- Humidity control ... 135
- Kangaroo mode ... 132
- Manual humidity control ... 135
- $O_2$ enrichment ... 134
- Operating principle ... 126
- Safety systems ... 137
- Skin temperature control ... 131
- Skin temperature measurement ... 130
- Twins in Caleo® ... 127
- Weighing scale ... 128
- X-rays ... 128

Dimensions ... 123
Disinfectant ... 94
Disinfecting/Cleaning/Sterilizing ... 94
Disinfection ... 105
Disposal ... 109
Doors, ports and bed ... 20
- Access port ... 20
- Bed ... 23, 27
- Canopy ... 22
- Double wall ... 21
- Drawer ... 25
- Front flap ... 20
- Grommets ... 24
- Height adjustment mechanism ... 26
- Humidifier systems ... 28
- Integrated socket strip ... 29
- Side flap ... 21
- X-ray drawer ... 24

Double wall ... 21
Drain the water heater. ... 78
Drawer ... 19, 25

Electrical safety ... 43
Equipotential bonding ... 131
Error-Cause-Remedy ... 118

Front flap ... 20
Front view ... 8, 141

Grommets ... 24

Height adjustment mechanism ..... 26
Hose holder for ventilation hoses ..... 18
Hot air duct ..... 9
Humidifier systems ..... 28
Humidity control
- Alarms ..... 61
- Description ..... 135
- Manually adjusting the set value ..... 59
- Setting AUTO humidity ..... 59
- Using ..... 58
- Water shortage ..... 61

Infusion support ..... 15
Intended Use ..... 6
Interfaces ..... 122

Kangaroo mode ..... 67
- Activate ..... 68
- Alarms ..... 69
- Configuration ..... 84
- Description ..... 132
- Ending ..... 70
- Tubing grommets ..... 68, 70

Labelling ..... 140
Lock key pad functions ..... 87

Maintenance ..... 4
Maintenance intervals ..... 106
Manual humidity control, Description ..... 135
Materials ..... 94
Maximum load ..... 123
Measurement and control parameters ..... 121
MEDIBUS interface ..... 31
Menus
- Cleaning Mode ..... 78
- Kangaroo mode ..... 67
- Trend display ..... 71
- Trend selection ..... 67

Messages – Cause – Remedy ..... 112
Monitor shelf ..... 18
Mounting accessories ..... 14
Multiple socket ..... 29

Nurse call ..... 29

$O_2$ control
- Adjusting the set value ..... 63
- Alarms ..... 65
- Using ..... 62

$O_2$ enrichment with $O_2$ control ..... 19
$O_2$ enrichment, Description ..... 134
$O_2$ monitor ..... 19
$O_2$ sensor information ..... 86
Operating data ..... 120
Operating principle ..... 126
Operation
- Ending ..... 92
- Precautions ..... 40
- Switching on ..... 44

Order List ..... 143

Parts List ..... 146
Performance data ..... 121
Phototherapy, Precautions ..... 42
Pole extensions ..... 17
Precautions ..... 40
Preparation ..... 14

Remedy ..... 112, 118
Removing the water supply ..... 97
Reprocessing List ..... 105
Reusable components ..... 105
Risk of burns ..... 80
Rotary knob ..... 11

Safety ..... 4
Safety checks ..... 4
Safety systems, Description ..... 137
Screen ..... 11
- Brightness ..... 66
- Contrast ..... 83

see the label on the unit. ..... 38, 96
Setting alarms
- Alarm limits ..... 85
- Initial sound volume of the alarms ..... 85
- Kangaroo mode ..... 84

Side flap ..... 21
Side view, connections ..... 8, 140
Skin temperature control ..... 49
- Adjusting the set value ..... 53
- Alarms ..... 56
- Description ..... 131
- Using ..... 53

Software information ..... 86
Sound intensity ..... 85
Spirit levels ..... 9
Sterilization ..... 105
Stripping down ..... 96
Switch off ..... 92
Switching over between standard/trend screen ..... 71
Swivel table ..... 15
Symbols ..... 139
Symbols used ..... 139

Technical Data ..... 120
Therapy and care options ..... 6
ThermoMonitoring™ ..... 130

Tilting the bed ..... 27, 37
Transport, In-house ..... 42
Tray 3020 ..... 17
Trend analysis ..... 74
    Ending ..... 77
    Selecting the time interval (zoom) ..... 77
    Trend selection ..... 76
Trend display
    Setting the time interval (Zoom) ..... 72
Twins in Caleo®, Description ..... 127

Use locations ..... 6

Vacuum mattress ..... 19

Water connection pipe ..... 98
Water shortage ..... 61
Water tank ..... 28
Weighing
    With tare ..... 89
    Without tare ..... 91
Weighing scale ..... 88
    Description ..... 128
What's what ..... 8
    Control panel ..... 10
    Front view ..... 8, 141
    Labelling ..... 140
    Side view, connections ..... 8, 140
    Top view, bed ..... 9

X-ray drawer ..... 24
X-rays, Description ..... 128

These Instructions for Use only apply to
**Caleo**
with the Serial No.:
If no Serial No. has been filled in by Dräger, these Instructions for Use are not binding and they do not apply to a particular medical product. These Instructions for Use are intended exclusively for customer information and are updated or replaced only upon customer request.

CE 0123
Directive 93/42/EEC
concerning Medical Devices


Manufacturer:

**Dräger Medical GmbH**
Moislinger Allee 53 – 55
23542 Lübeck
Germany
+49 451 8 82-0
FAX +49 451 8 82-20 80
http://www.draeger.com

Only for Canada
Distributed by
**Draeger Medical Canada Inc.**
120 East Beaver Creek Road Suite 104
Richmond Hill Ontario L4B 4V1
+1 866 343 2273 (Toll Free)
+1 905 530 2387
FAX +1 905 763 1890



**9037571** – GA 6150.001 en


© Dräger Medical GmbH


Edition: 9 – 2015-01
(Edition: 1 – 2002-03)

Dräger reserves the right to make changes in the device without prior notification.

9 0 3 7 5 7 1

As of 2015-08:
Dräger Medical GmbH
changes to
**Drägerwerk AG & Co. KGaA**