Inkjet Solutions
Technical Support

| | |
|---|---|
| Doc Number: | ITS-00111 |
| Version: | I |
| Date First Published: | December 22, 2014 |
| Date Released: | June 17, 2019 |
| Audience: | All Audiences |

# Machine Specifications - Gen II 3/4 Loader/Full Automation Transition Table

Description: Machine specifications should be used by customers and Field Service Engineers during initial phases of printer and component logistics planning.

Affected Printers: VUTEk h3 & h5, HS125 Pro, HS100 Pro, VUTEk LX3 Pro (GS3LX)

Copyright © 2019 Electronics for Imaging, Inc. All rights reserved.

The information contained in this document is confidential and proprietary to Electronics for Imaging, Inc (EFI). This information is provided only to authorized representatives of EFI and EFI customers solely for the purpose of facilitating the use of EFI's products. No information contained herein may be disclosed to any unauthorized person for any purpose whatsoever without the prior written consent of EFI. EFI makes no representations or warranties with respect to the contents of this document. Further, EFI reserves the right to revise or change this publication and the products it describes without notice.

# Machine Specifications

| | |
|---|---|
| **Use these specifications when planning an automated media installation with any compatible hybrid printer.** | **ITS-00111, Rev. I** |

## Required Tools, Materials and Documents

| | | |
|---|---|---|
| OMM-00047 | Inkjet Solutions Safety Guide | https://inkjet.support.efi.com/doc.php?doc=683 |

## Safety Information

| | | |
|---|---|---|
| | **GENERAL** | A trained operator must attend the printer at all times during operation. Without the immediate intervention of a trained operator, small problems and failures during printing can create safety hazards as well as the potential for severe damage to your printer. |

## Revision History

| | | |
|---|---|---|
| 12/22/2014 | Rev. A | Released |
| 4/8/2016 | Rev. B | Updated |
| 5/6/2016 | Rev. C | Updated Electrical specifications, table 4, [360-528 VAC @ 30A (3 Phase)] |
| 5/27/2016 | Rev. D | Added Automation Overview pages |
| 10/11/2016 | Rev. E | Change wire configuration from 5 wire to 4 wire; see Electrical Specifications. |
| 11/21/2016 | Rev. F | • Added missing site plans to pdf including 3/4/Full Automation System One site requirements on last page<br>• Changed word “width” to size in 3. Media Specifications |
| 9/14/2017 | Rev. G | • Added LX3 Printer automation |
| 9/25/2018 | Rev. H | • Updated Site Plan and Dimensions section. |
| 06/11/2019 | Rev. I | • Added site plan for h3/h5 |


© Copyright 2016-19 | ELECTRONICS FOR IMAGING, INC. ALL RIGHTS RESERVED.

# Shipping Specifications

**Definitions**

EFI peripherals are shipped in one of two packaging configurations: **crated** or **uncrated**. All peripherals are **palletized**.

- **Crated:** EFI peripherals that are shipped outside US borders are shipped in a crate to protect against damage.
- **Uncrated:** The peripheral has been removed from the shipping crate, removed from pallet, with all packaging removed.

**Note:** Use the uncrated dimensions to determine if the peripheral will fit through your doorway.

**Table 1: Peripheral Dimensions and Weights**

| | Height | Width (front to back) | Length (left to right) | Weight |
|---|---|---|---|---|
| Crated | 79.5" [2.02m] | 92.0" [2.33m] | 157.8" [4.01m] | 6,165 lb [2,796 kg] |
| Uncrated | 48.0” [121.9cm] | 82.0” [208.3cm] | 152.0 [386.1cm] | 3,840 lb [1,742 kg] |

*****_Uncrated dimensions are listed in the overview pages at the end of this document._

## 1. Operational Clearances

*The drawings at the end of this document show the printer and peripheral dimensions, as well as working clearances needed to accommodate printing operations.*


© Copyright 2016-19 | ELECTRONICS FOR IMAGING, INC. ALL RIGHTS RESERVED.

## 2. Print Environment

*Keep the room where the printer and peripherals are located free of dust and other particle contaminants.*

**Table 2: Environment Specifications**

| Environment | |
|---|---|
| **Parameter** | **Value: Imp[Metric]** |
| Ambient Room temperature | 68 °F – 86 °F [20 °C – 30 °C] |
| Relative humidity (Non-condensing) | 30-80% |

## Electrical Specifications

*A power cable must be supplied by the customer. Size and configuration is determined by local code requirements. A licensed electrician must ensure that your printer's dedicated power source meets the specification requirements.*

**Table 3: Electrical Specifications**

| Parameter | Value |
|---|---|
| **Power, Nominal** | 360-528 VAC @ 30A (3 Phase) |
| **Power, Absolute Min/Max** | Main Input (L1, L2, L3, PE at main disconnect switch) 360-528 VAC L-L, 208-305 VAC L-PE<br>MAINS (L1, L2, L3, at power distribution block PDB206) 360-528 VAC L-L, 208-305 VAC L-chassis<br>XFMR OUT (L1, L2, L3, PE at power distribution block PDB215) 180-264 VAC L-L, 104-152 VAC, L-PE |
| **Frequency** | 50 or 60 Hz |
| **Wiring** | 3-phase, 4 wire (3 legs + Earth Ground) |
| Legend: L – Line | L-L – Line to Line PE – Physical Earth |
| **Important:** Installers must measure the line-to-line, line-to-chassis, and line-to-ground voltages. The voltages difference must be within the above specifications. | |


© Copyright 2016-19 | ELECTRONICS FOR IMAGING, INC. ALL RIGHTS RESERVED.

## Compressed Air – Main Peripheral

**Table 4: Compressed Air Specifications**

| **Air** | |
|---|---|
| **Parameter** | **Value: Imp[Metric]** |
| Main Input | 70-85 psi [4.82 bar] |
| | >/= 0.5 SCFM [0.845 m³] |
| Main Air Regulator | 45 psi (+/- 5) |
| Fence Assy. Regulator | 45 psi (+/- 5) |

## Media Specifications

**Table 5: Media Specifications**

| **Media Specifications** | |
|---|---|
| **Parameter** | **Value: Imp[Metric]** |
| Media Size, Min. | 36 inches [91.44 cm] x 36 inches [91.44 cm] |
| Media Size, Max. | 60 inches [ 152.4 cm] x 120 inches [ 304.8 cm] |
| Sheet Thickness, max | 2 inches [ 5.08 cm] |
| Max. Sheet Weight | 10 lbs or 6 psi, whichever is less |
| | 4.54 kg or [0.421842 kg force], whichever is less |

# 3. Site Plan and Dimensions

*The drawings shown on the following pages of this document illustrate the peripheral dimensions in an automated printing configuration. To ensure that you have the latest version of this drawing, contact your field service engineer before site planning.*


© Copyright 2016-19 | ELECTRONICS FOR IMAGING, INC. ALL RIGHTS RESERVED.

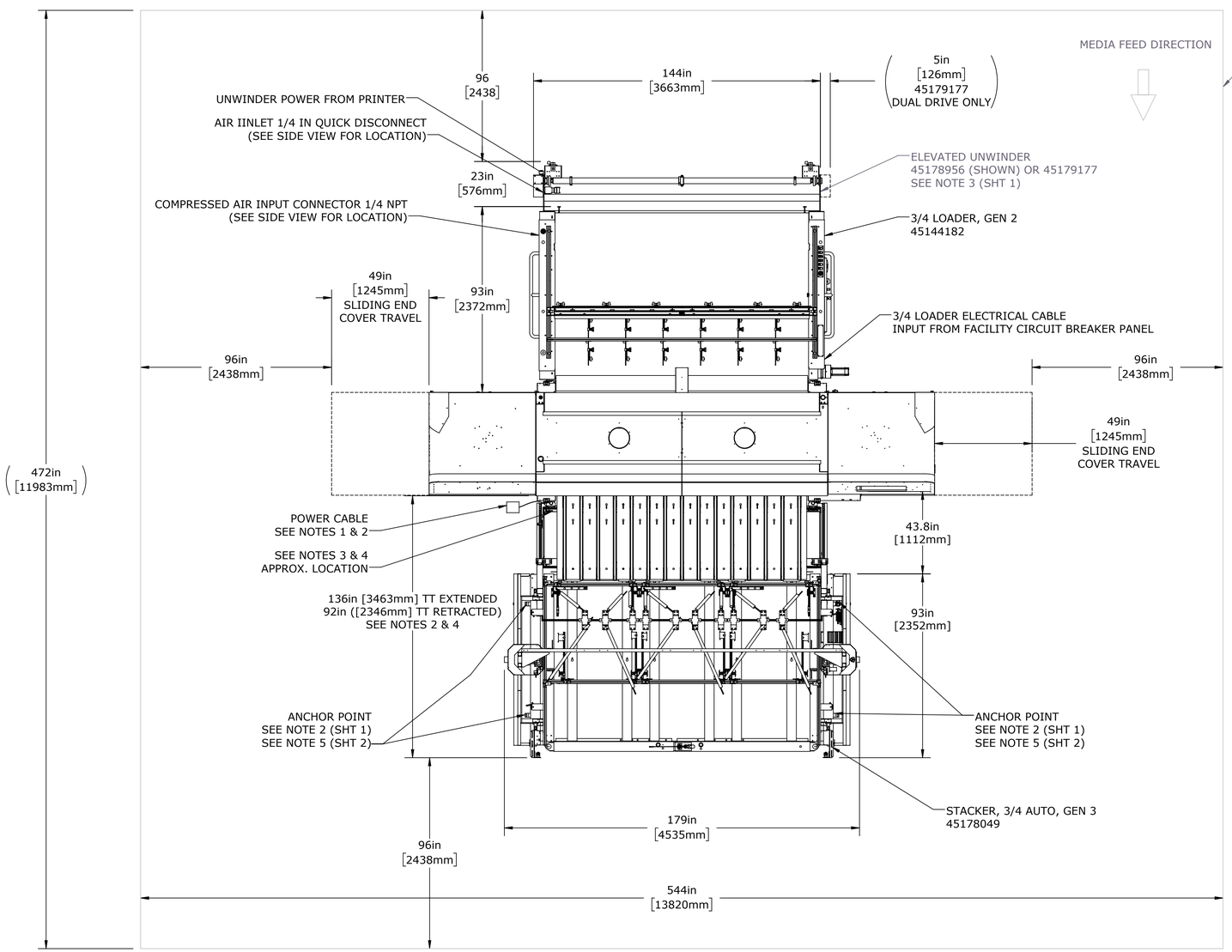


NOTES:
1. POWER REQUIREMENTS: DEFINED IN 3/4 STACKER GEN 3 ENGINEERING SPECIFICATION 45183714.
2. POWER FEED MUST ACCOMODATE THE TRANSITION TABLE (TT) IN BOTH EXTENDED AND RETRACTED POSSITIONS.
3. AIR REQUIREMENTS: CLEAN DRY AIR, 80CFM @ 90PSI
4. AIR FEED MUST ACCOMODATE THE TRANSITION TABLE (TT) IN BOTH EXTENDED AND RETRACTED POSITIONS.
5. MACHINE LAGGING REQUIREMENTS: M12 CONCRETE ANCHORS IN 4" THICK MINIMUM OF 4000 PSI CONCRETE. ANCHOR ENGAGEMENT 3.5" MINIMUM
6. ESTIMATED MACHINE WEIGHT: 4500 TO 5000 LBS

FACILITY CONNECTIONS PROVIDED:
- AIR: 12MM OD TUBE RATED FOR 200 PSI OR GREATER
- ELECTRICAL: NEMA STYLE L16-30P TWISTLOCK RECEPTACLE, 30 AMP, 4 WIRE

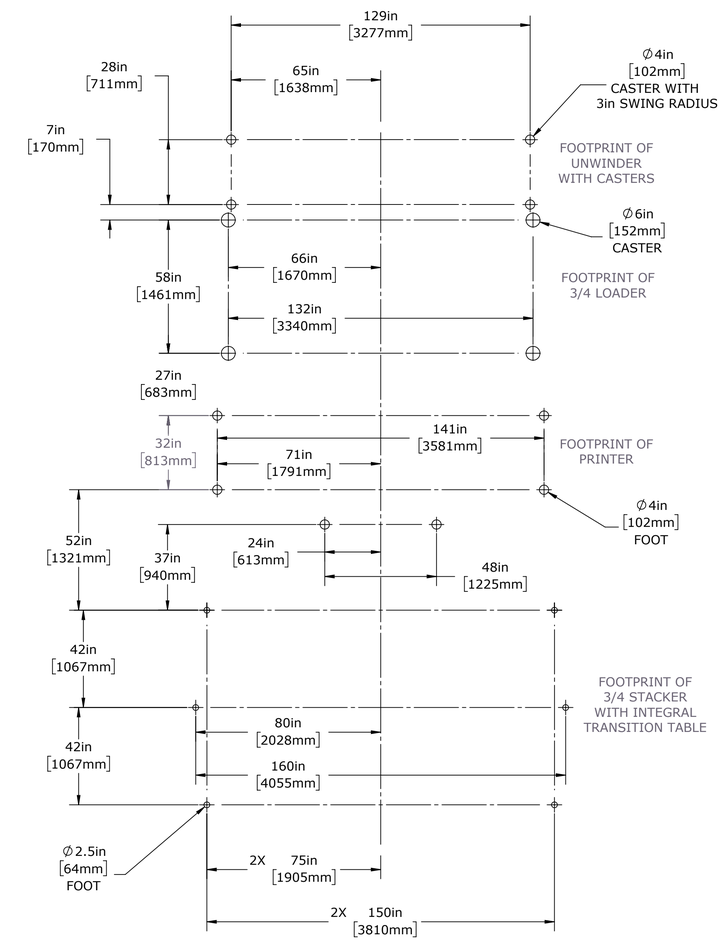


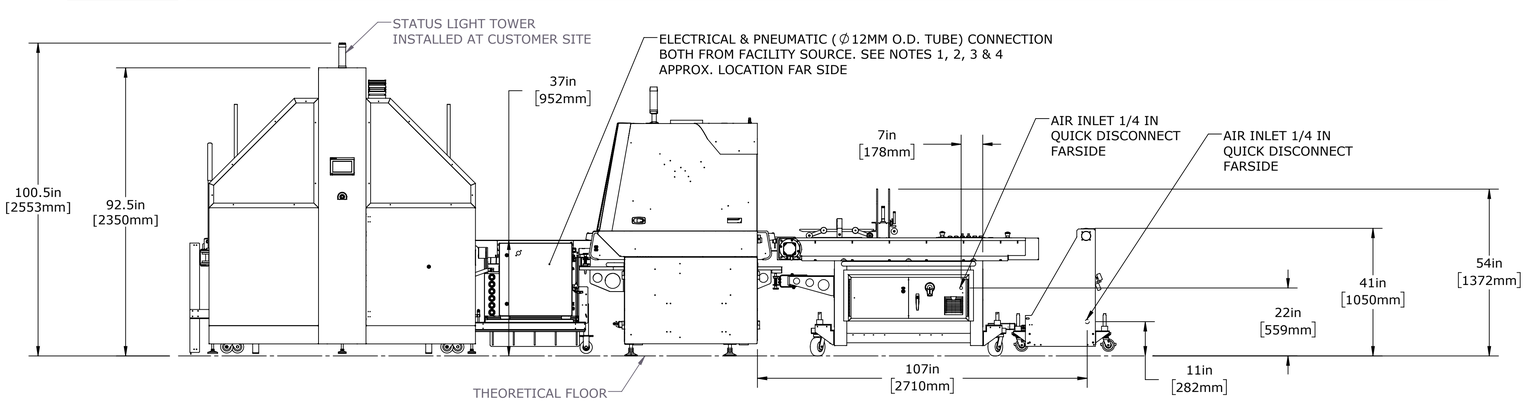


PRINTER WITH OPTIONAL
ELEVATED WINDERS & 3/4 LOADER

UNLESS OTHERWISE SPECIFIED DIMENSIONS ARE IN INCHES
TOLERANCES ARE:
FRACTIONS ±1/16 | DECIMALS .X ±.03 .XX ±.01 .XXX ±.005 .XXXX ±.0010 | ANGLES X ±.5 .XX ±.1
63
REMOVE ALL BURRS AND SHARP EDGES EXCEPT WHERE NOTED OTHERWISE
THIRD ANGLE PROJECTION

CAD GENERATED DRAWING, DO NOT MANUALLY UPDATE DO NOT SCALE DRAWING

**PROPRIETARY AND CONFIDENTIAL**
THE INFORMATION CONTAINED IN THIS DRAWING IS THE SOLE PROPERTY OF EFI, INC. ANY REPRODUCTION IN PART OR AS A WHOLE WITHOUT WRITTEN PERMISSION OF EFI, INC. IS PROHIBITED.

efi™

TITLE: DOC, SITE DWG, H3_H5, 3_4 AUTO

| | | |
|---|---|---|
| MATERIAL: SEE AGILE | DRAWN: CAE | DATE: 4/11/2018 |
| COATING: N/A | DESIGNED: | DATE: |
| VERSION: Dwg Ver: 10 Model Ver: 10 | FILENAME: 45182607 DOC, SITE DWG, H3_H5, 3_4 AUTO | |

SIZE: D | DWG. NO: 45182607 | REV: 1
SCALE: 1:32 | SHEET: 2 OF 2

FORM 423-11D

| REV | DESCRIPTION | DATE | DRN BY | CHECKED |
|---|---|---|---|---|
| 1 | ECO 50358: PROTOTYPE RELEASE | 7/3/2018 | KDD | DBR |

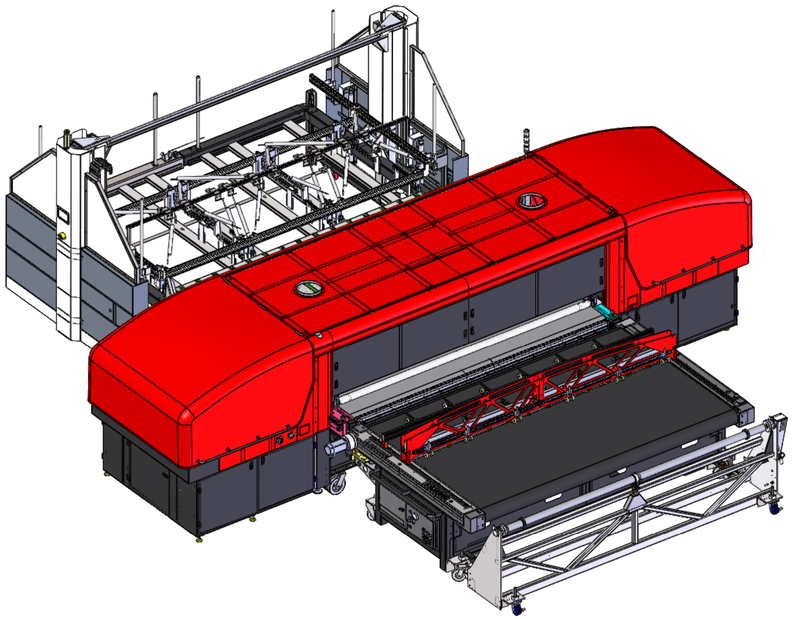

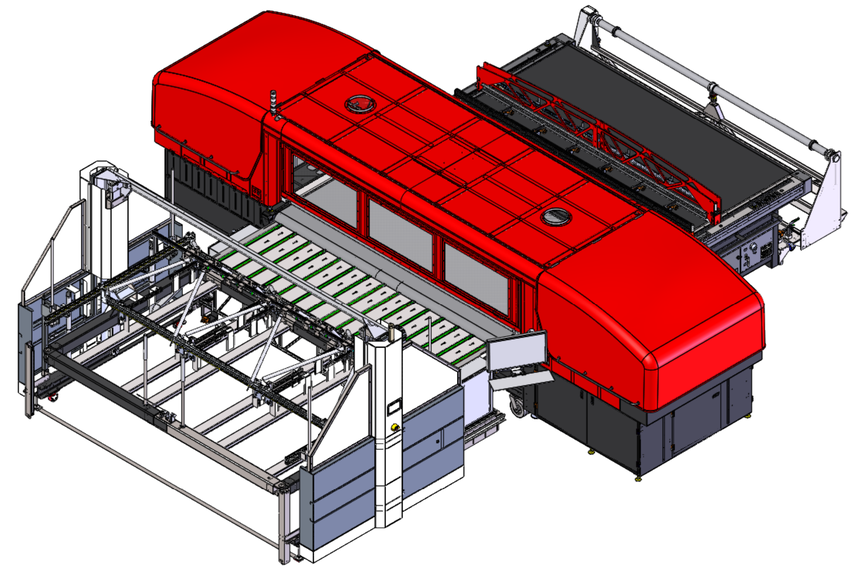

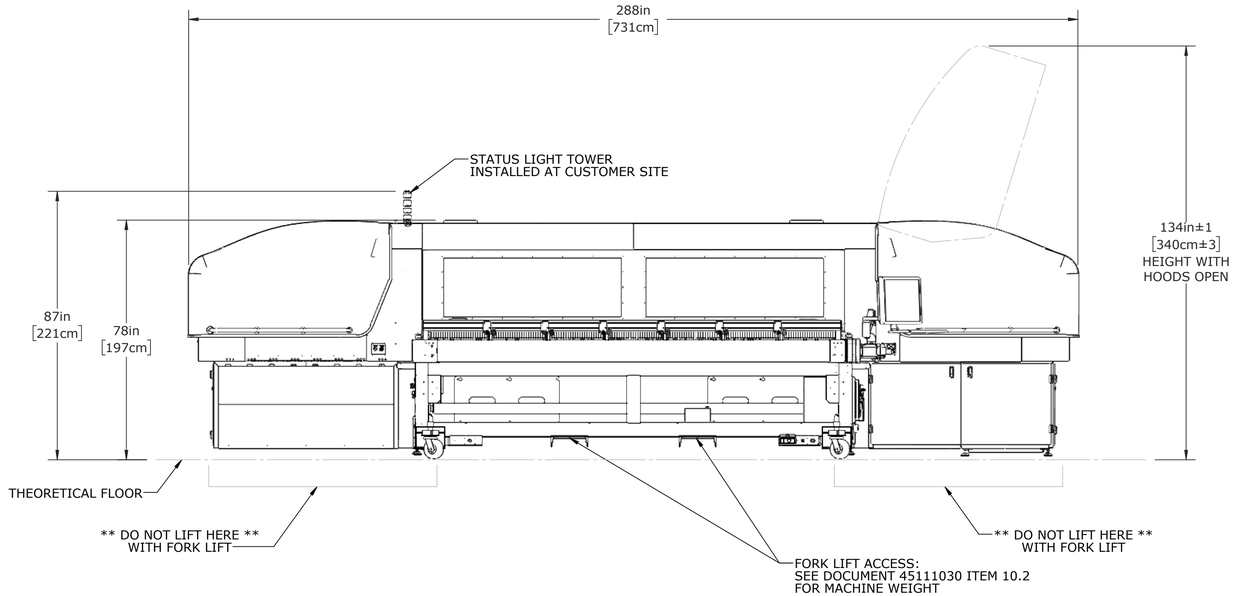


OUTPUT STACKER REMOVED FOR CLARITY

NOTES:
1. DIMENSIONS ARE NOMINAL EXCEPT AS SHOWN (DUAL DIMENSIONS ARE IN CENTIMETERS)
2. STACKER SHOWN ON SHEET 2 MUST BE ANCHORED TO THE FLOOR, AFTER FINAL POSITION IS ESTABLISHED.
3. ELEVATED UNWINDER REQUIRES DOCKING KIT 45182839 SUPPLIED WITH WINDER. SEE 45182427 FOR WINDER INPUT REQUIREMENTS.
4. MATE REQUIREMENTS FOR SUPPLIED COMPRESSED AIR FITTINGS

UNLESS OTHERWISE SPECIFIED DIMENSIONS ARE IN INCHES TOLERANCES ARE:
FRACTIONS ±1/16 | DECIMALS .X ±.03 .XX ±.01 .XXX ±.005 .XXXX ±.0010 | ANGLES .X ±.5 .XX ±.1
63
REMOVE ALL BURRS AND SHARP EDGES EXCEPT WHERE NOTED OTHERWISE
THIRD ANGLE PROJECTION

CAD GENERATED DRAWING,
DO NOT MANUALLY UPDATE
DO NOT SCALE DRAWING

**PROPRIETARY AND CONFIDENTIAL**
THE INFORMATION CONTAINED IN THIS DRAWING IS THE SOLE PROPERTY OF EFI, INC. ANY REPRODUCTION IN PART OR AS A WHOLE WITHOUT WRITTEN PERMISSION OF EFI, INC. IS PROHIBITED.

DRAWN KDD DATE 7/3/2018
DESIGNED DATE
MATERIAL SEE AGILE
COATING N/A
VERSION Dwg Ver: 7 Model Ver: 4
FILENAME 45182721 DOC, SITE DWG, HS, 3_4 AUTO

TITLE
DOC, SITE DWG, HS, 3_4 AUTO

SIZE D DWG. NO. 45182721 REV. 1
SCALE 1:30 SHEET 1 OF 3

FORM 423-11D

3/4 STACKER GEN 3 (45178049)

NOTES:

1. POWER REQUIREMENTS: DEFINED IN 3/4 STACKER GEN 3 ENGINEERING SPECIFICATION 45183714.
2. POWER FEED MUST ACCOMODATE THE TRANSITION TABLE (TT) IN BOTH EXTENDED AND RETRACTED POSSITIONS.
3. AIR REQUIREMENTS: CLEAN DRY AIR, 80CFM @ 90PSI
4. AIR FEED MUST ACCOMODATE THE TRANSITION TABLE (TT) IN BOTH EXTENDED AND RETRACTED POSITIONS.
5. MACHINE LAGGING REQUIREMENTS: M12 CONCRETE ANCHORS IN 4" THICK MINIMUM OF 4000 PSI CONCRETE. ANCHOR ENGAGEMENT 3.5" MINIMUM
6. ESTIMATED MACHINE WEIGHT: 4500 TO 5000 LBS

FACILITY CONNECTIONS PROVIDED:

- AIR: 12MM OD TUBE RATED FOR 200 PSI OR GREATER
- ELECTRICAL: NEMA STYLE L16-30P TWISTLOCK RECEPTACLE, 30 AMP, 4 WIRE

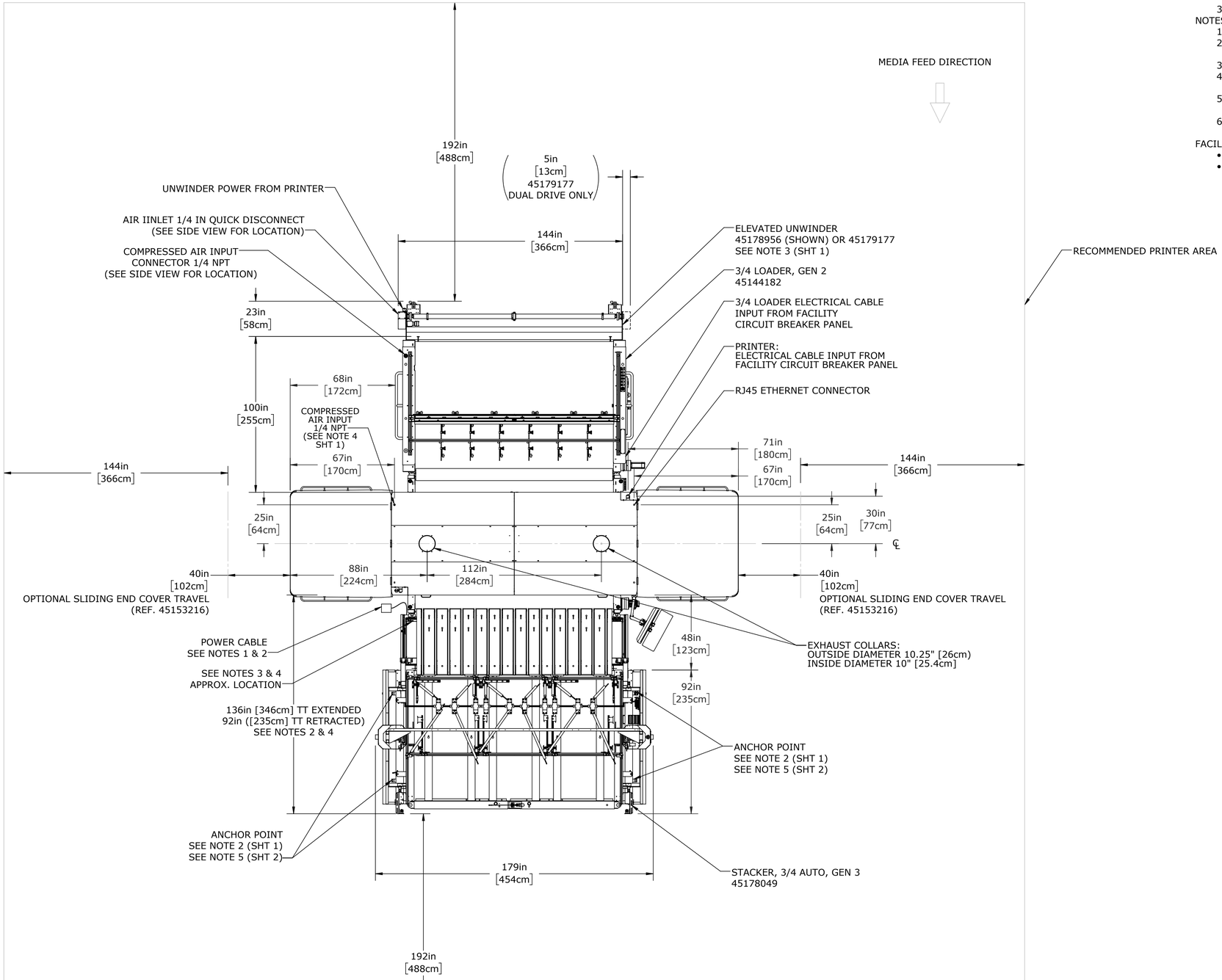


UNLESS OTHERWISE SPECIFIED DIMENSIONS ARE IN INCHES TOLERANCES ARE:
FRACTIONS ±1/16 DECIMALS .X ±.03 .XX ±.01 .XXX ±.005 .XXXX ±.0010 ANGLES ±.5
63
REMOVE ALL BURRS AND SHARP EDGES EXCEPT WHERE NOTED OTHERWISE
THIRD ANGLE PROJECTION

CAD GENERATED DRAWING, DO NOT MANUALLY UPDATE DO NOT SCALE DRAWING

**PROPRIETARY AND CONFIDENTIAL**
THE INFORMATION CONTAINED IN THIS DRAWING IS THE SOLE PROPERTY OF EFI, INC. ANY REPRODUCTION IN PART OR AS A WHOLE WITHOUT WRITTEN PERMISSION OF EFI, INC. IS PROHIBITED.

TITLE: DOC, SITE DWG, HS, 3_4 AUTO

| | |
|---|---|
| MATERIAL | SEE AGILE |
| COATING | N/A |
| DRAWN | KDD |
| DATE | 7/3/2018 |
| DESIGNED | |
| DATE | |
| VERSION | Dwg Ver: 7 Model Ver: 4 |
| FILENAME | 45182721 DOC, SITE DWG, HS, 3_4 AUTO |
| SIZE | D |
| DWG. NO. | 45182721 |
| REV. | 1 |
| SCALE | 1:35 |
| SHEET | 2 OF 3 |

FORM 423-11D

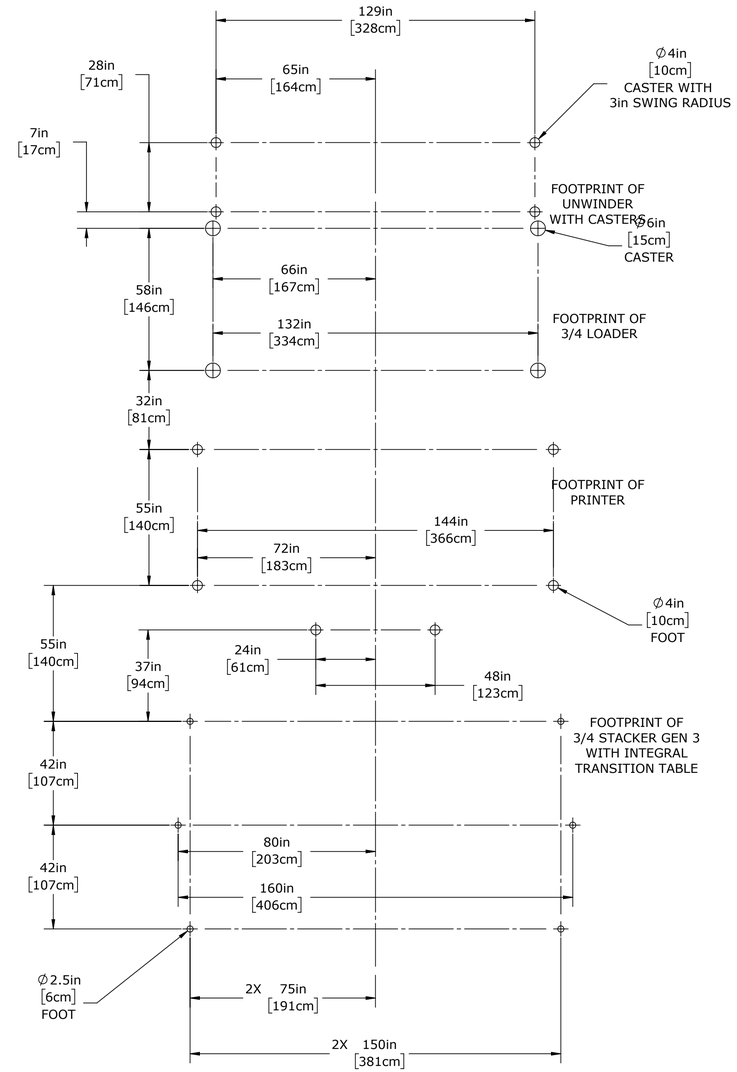


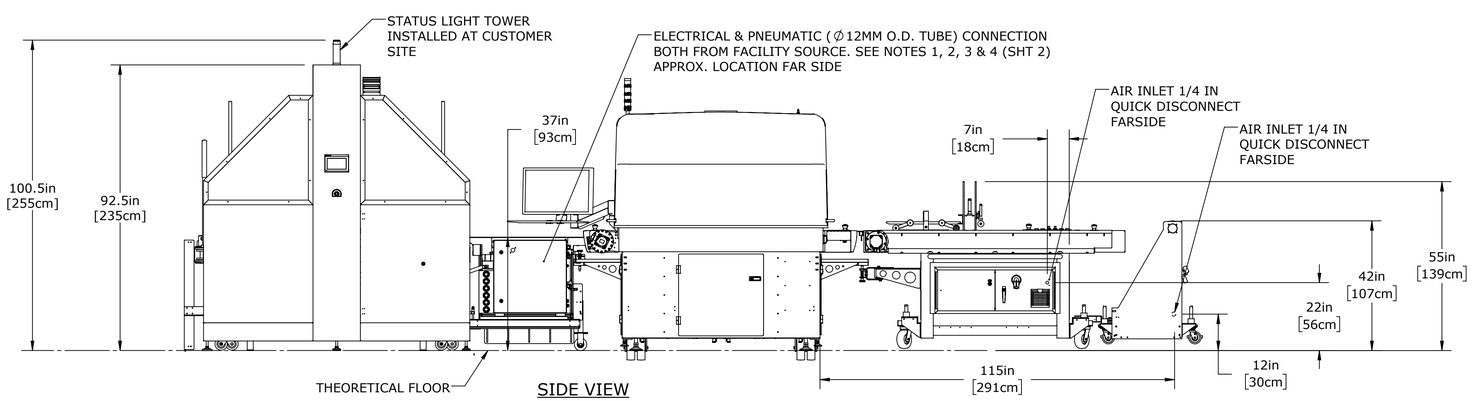


SIDE VIEW

PRINTER WITH OPTIONAL
ELEVATED WINDER 3/4 LOADER,
& 3/4 STACKER GEN 3

UNLESS OTHERWISE SPECIFIED DIMENSIONS ARE IN INCHES
TOLERANCES ARE:
FRACTIONS ±1/16 | DECIMALS .X ±.03 .XX ±.01 .XXX ±.005 .XXXX ±.0010 | ANGLES X ±.5 .XX ±.1
REMOVE ALL BURRS AND SHARP EDGES EXCEPT WHERE NOTED OTHERWISE
THIRD ANGLE PROJECTION

CAD GENERATED DRAWING,
DO NOT MANUALLY UPDATE
DO NOT SCALE DRAWING

**PROPRIETARY AND CONFIDENTIAL**
THE INFORMATION CONTAINED IN THIS DRAWING IS THE SOLE PROPERTY OF EFI, INC. ANY REPRODUCTION IN WHOLE OR PART OR AS A WHOLE WITHOUT WRITTEN PERMISSION OF EFI, INC. IS PROHIBITED.

efi™

TITLE: DOC, SITE DWG, HS, 3_4 AUTO

MATERIAL: SEE AGILE
COATING: N/A
DRAWN: KDD | DATE: 7/3/2018
DESIGNED: | DATE:
VERSION: Dwg Ver: 7 | Model Ver: 4
FILENAME: 45182721 DOC, SITE DWG, HS, 3_4 AUTO
SIZE: D | DWG. NO.: 45182721 | REV: 1
SCALE: 1:30 | SHEET 3 OF 3

FORM 423-11D

| REV | DESCRIPTION | DATE | DRN BY | CHECKED |
|---|---|---|---|---|
| 1 | ECO 38616: INITIAL RELEASE | 9/24/2015 | KDD | |
| 2 | ECO 41462: ADDED PRINTER FOOTPRINT VIEW (SHEET 3), ADDED HVAC NOTE | 2/24/2016 | CAE | SPL |
| 3 | ECO 42007: REMOVED HVAC NOTE ADDED AT REV 2 | 4/12/2016 | CAE | SPL |
| 4 | ECO 43134: ADD SHEET 4 FOR SLIDING HOODS, ADD SOME MISSING DIMENSIONS (SHT 2) | 8/3/2016 | KDD | DBR |

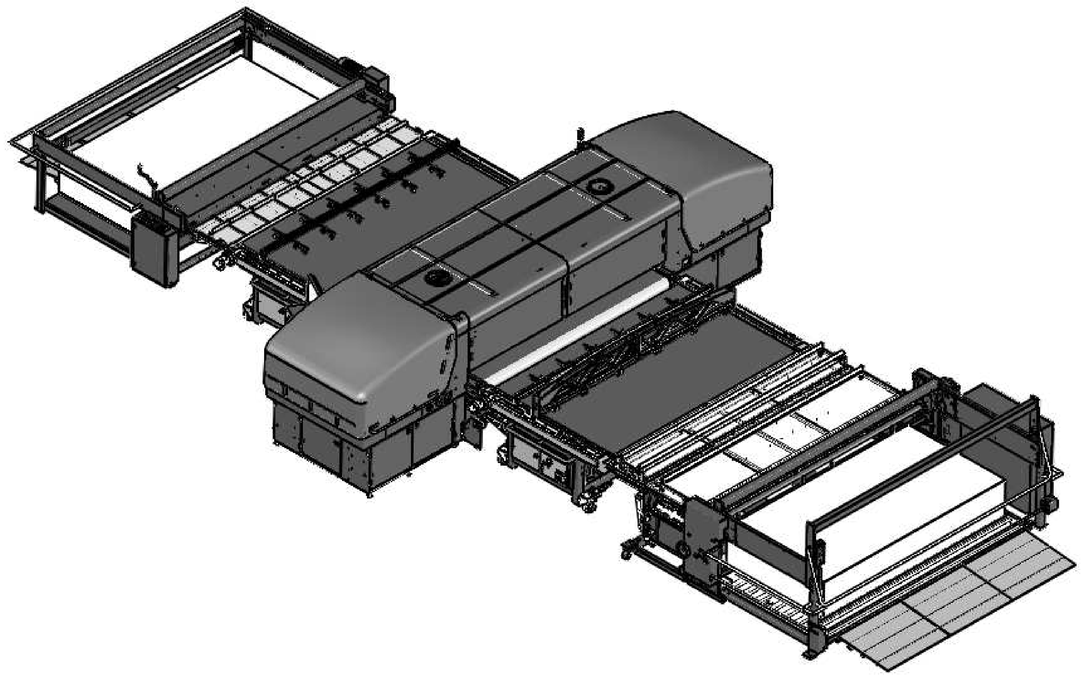

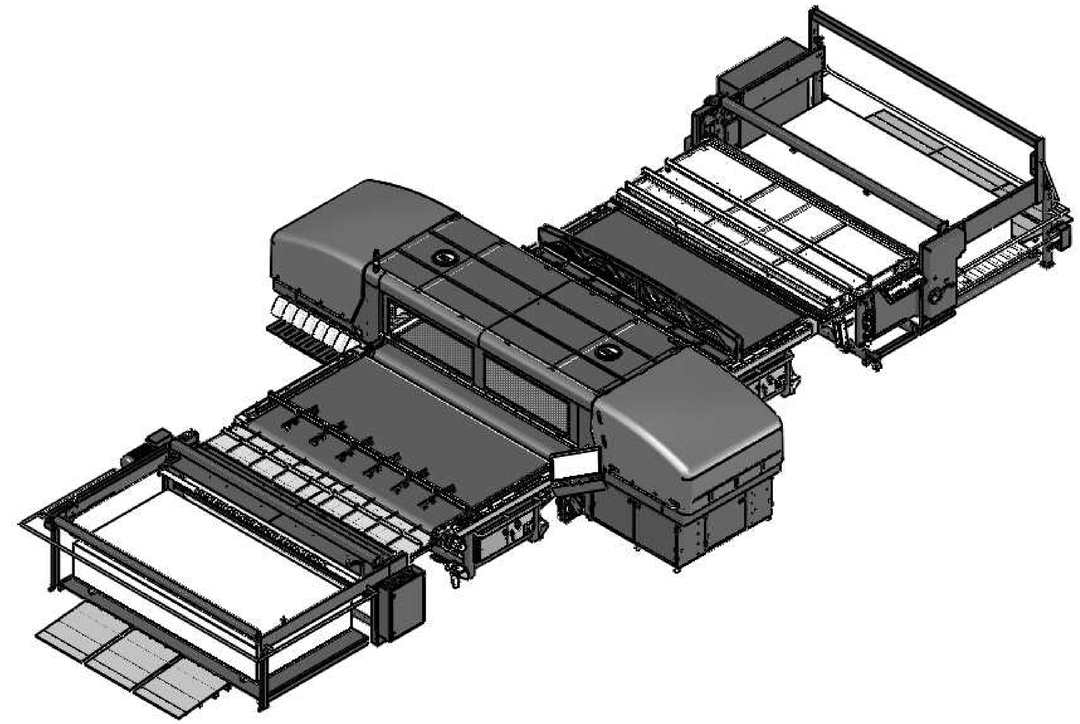

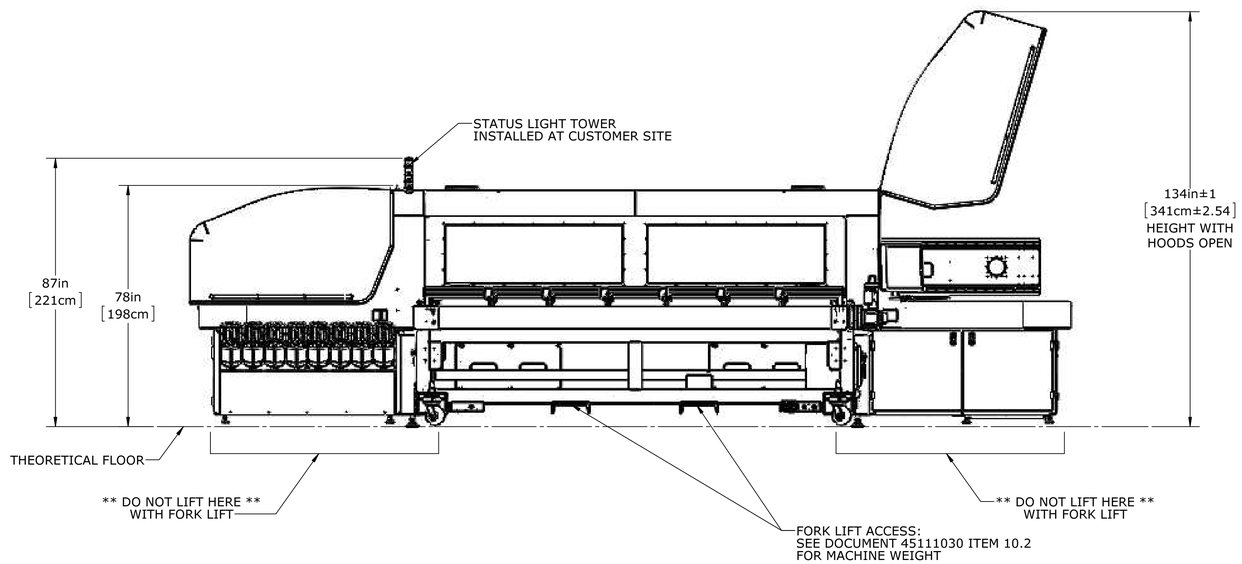


OUTPUT STACKER AND TABLE REMOVED FOR CLARITY

NOTES:
1. MATE REQUIREMENTS FOR SUPPLIED COMPRESSED AIR FITTINGS.

UNLESS OTHERWISE SPECIFIED DIMENSIONS ARE IN INCHES TOLERANCES ARE:
FRACTIONS ±1/16 DECIMALS .X ±.03 .XX ±.01 .XXX ±.005 .XXXX ±.0010 ANGLES .X ±.5 .XX ±.1
REMOVE ALL BURRS AND SHARP EDGES EXCEPT WHERE NOTED OTHERWISE
THIRD ANGLE PROJECTION

CAD GENERATED DRAWING, DO NOT MANUALLY UPDATE DO NOT SCALE DRAWING

**PROPRIETARY AND CONFIDENTIAL**
THE INFORMATION CONTAINED IN THIS DRAWING IS THE SOLE PROPERTY OF EFI, INC. ANY REPRODUCTION IN PART OR AS A WHOLE WITHOUT WRITTEN PERMISSION OF EFI, INC. IS PROHIBITED.

DRAWN: KDD | DATE: 9/1/2015
DESIGNED: DBR | DATE: 11/2/2012
VERSION: Dwg Ver: 21 Model Ver: 11
FILENAME: 45139697 MODEL, SITE DWG, HS SYS, G2 FULL AUTO LOAD STACK

efi™

TITLE: MODEL, SITE DWG, HS SYS, G2 FULL AUTO LOAD STACK

MATERIAL: N/A
COATING: N/A

SIZE: D | DWG. NO.: 45139697 | REV.: 4
SCALE: 4:1 | SHEET 1 OF 4

FORM 423-11D
D021306-A

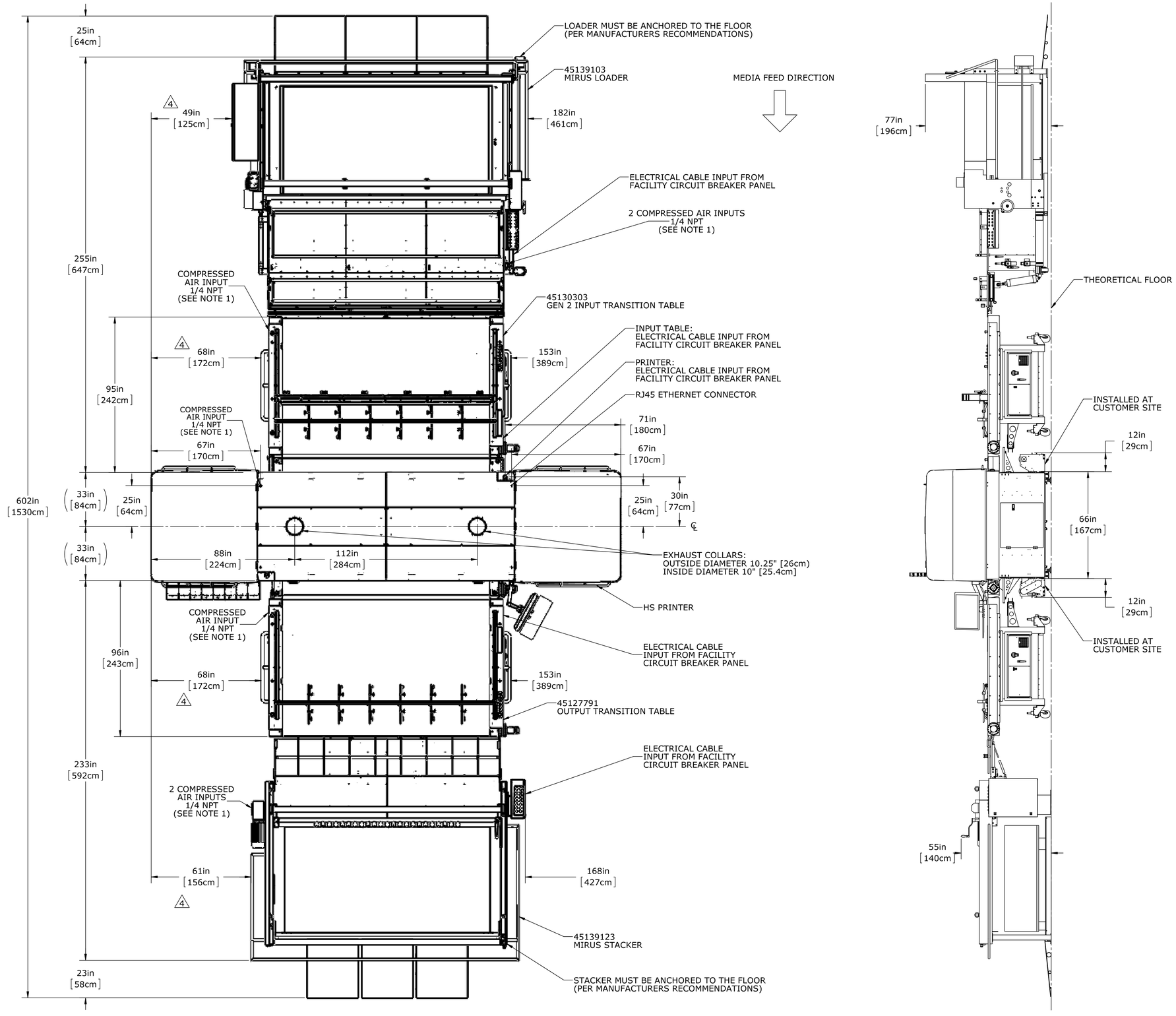


UNLESS OTHERWISE SPECIFIED DIMENSIONS ARE IN INCHES TOLERANCES ARE:
FRACTIONS ±1/16 DECIMALS .X ±.03 .XX ±.01 .XXX ±.005 .XXXX ±.0010 ANGLES X ±.5 .XX ±.1
REMOVE ALL BURRS AND SHARP EDGES EXCEPT WHERE NOTED OTHERWISE
THIRD ANGLE PROJECTION

CAD GENERATED DRAWING, DO NOT MANUALLY UPDATE DO NOT SCALE DRAWING

**PROPRIETARY AND CONFIDENTIAL**
THE INFORMATION CONTAINED IN THIS DRAWING IS THE SOLE PROPERTY OF EFI, INC. ANY REPRODUCTION IN PART OR AS A WHOLE WITHOUT WRITTEN PERMISSION OF EFI, INC. IS PROHIBITED.

| | | |
|---|---|---|
| MATERIAL N/A | DRAWN KDD | DATE 9/1/2015 |
| | DESIGNED DBR | DATE 11/2/2012 |
| COATING N/A | VERSION Dwg Ver: 21 Model Ver: 11 | |
| | FILENAME 45139697 MODEL, SITE DWG, HS SYS, G2 FULL AUTO LOAD STACK | |

efi™

TITLE
MODEL, SITE DWG, HS SYS, G2 FULL AUTO LOAD STACK

SIZE D | DWG. NO. 45139697 | REV 4

SCALE 4:1 | SHEET 2 OF 4

FORM 423-11D
D021306-A

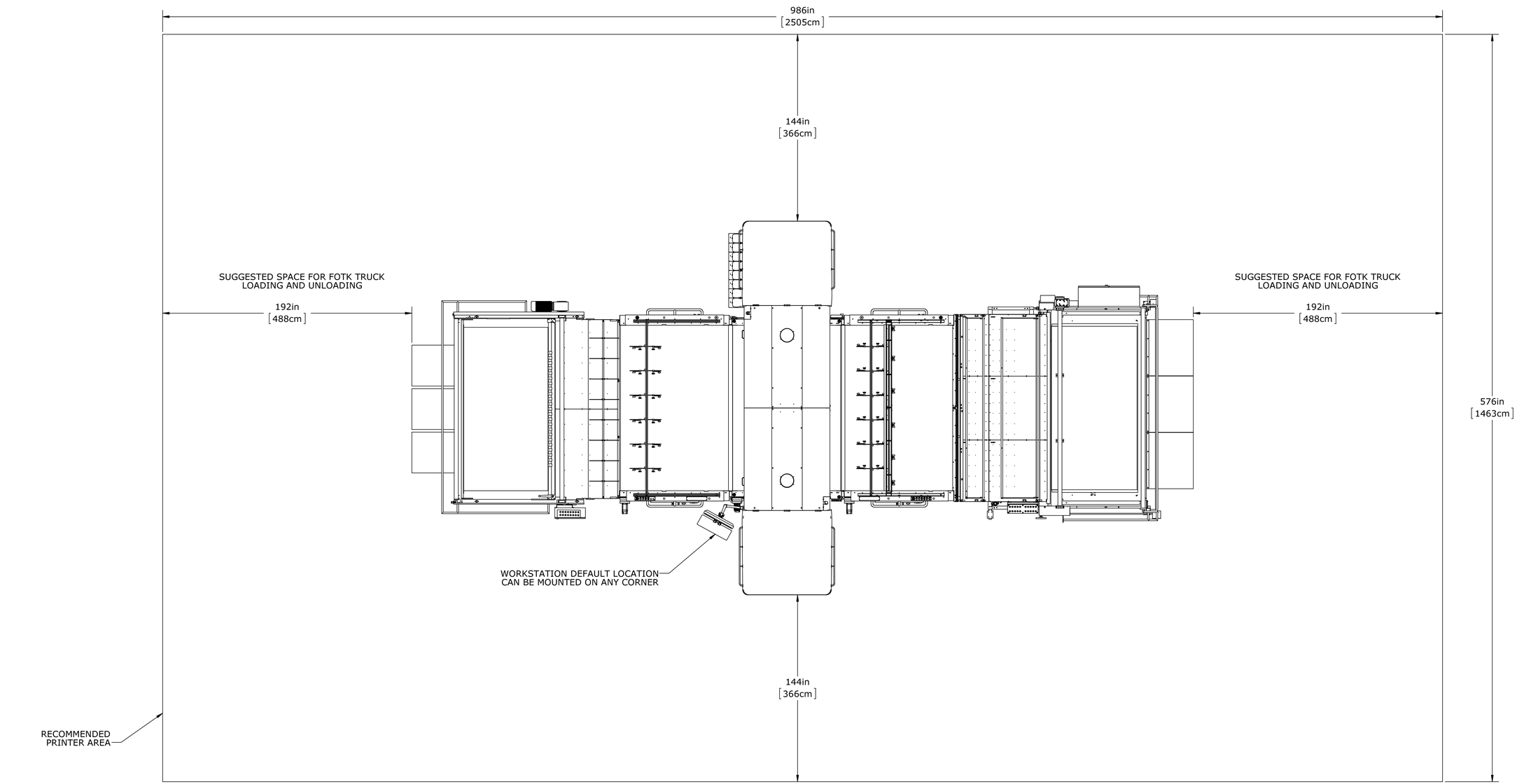


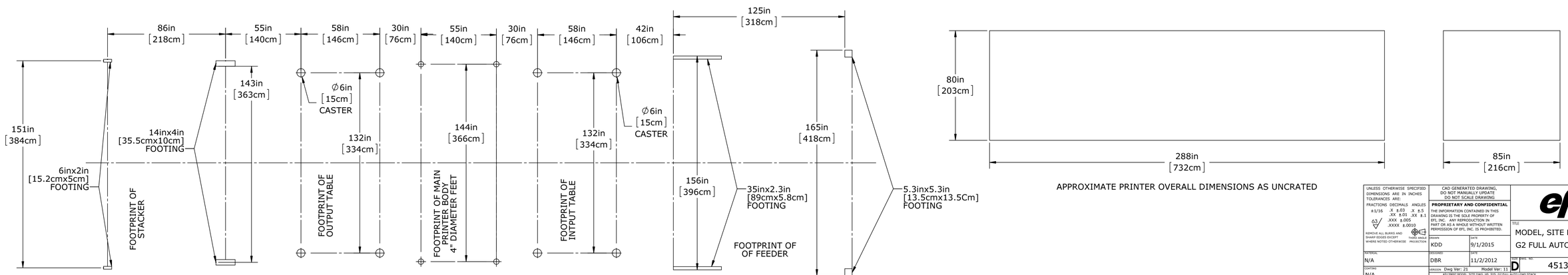


APPROXIMATE PRINTER OVERALL DIMENSIONS AS UNCRATED

UNLESS OTHERWISE SPECIFIED DIMENSIONS ARE IN INCHES
TOLERANCES ARE:
FRACTIONS ±1/16 DECIMALS .X ±.03 .XX ±.01 .XXX ±.005 .XXXX ±.0010 ANGLES X ±.5 XX ±.1
REMOVE ALL BURRS AND SHARP EDGES EXCEPT WHERE NOTED OTHERWISE
THIRD ANGLE PROJECTION

CAD GENERATED DRAWING.
DO NOT MANUALLY UPDATE
DO NOT SCALE DRAWING

**PROPRIETARY AND CONFIDENTIAL**
THE INFORMATION CONTAINED IN THIS DRAWING IS THE SOLE PROPERTY OF EFI, INC. ANY REPRODUCTION IN PART OR AS A WHOLE WITHOUT WRITTEN PERMISSION OF EFI, INC. IS PROHIBITED.

efi™

TITLE
MODEL, SITE DWG, HS SYS,
G2 FULL AUTO LOAD STACK

| | | |
|---|---|---|
| MATERIAL N/A | DRAWN KDD | DATE 9/1/2015 |
| | DESIGNED DBR | DATE 11/2/2012 |
| COATING N/A | VERSION Dwg Ver: 21 Model Ver: 11 | |
| | FILENAME 45139697 MODEL, SITE DWG, HS SYS, G2 FULL AUTO LOAD STACK | |

SIZE D | DWG. NO 45139697 | REV 4
SCALE 1:36 | SHEET 3 OF 4

FORM 423-11D
D021306-A

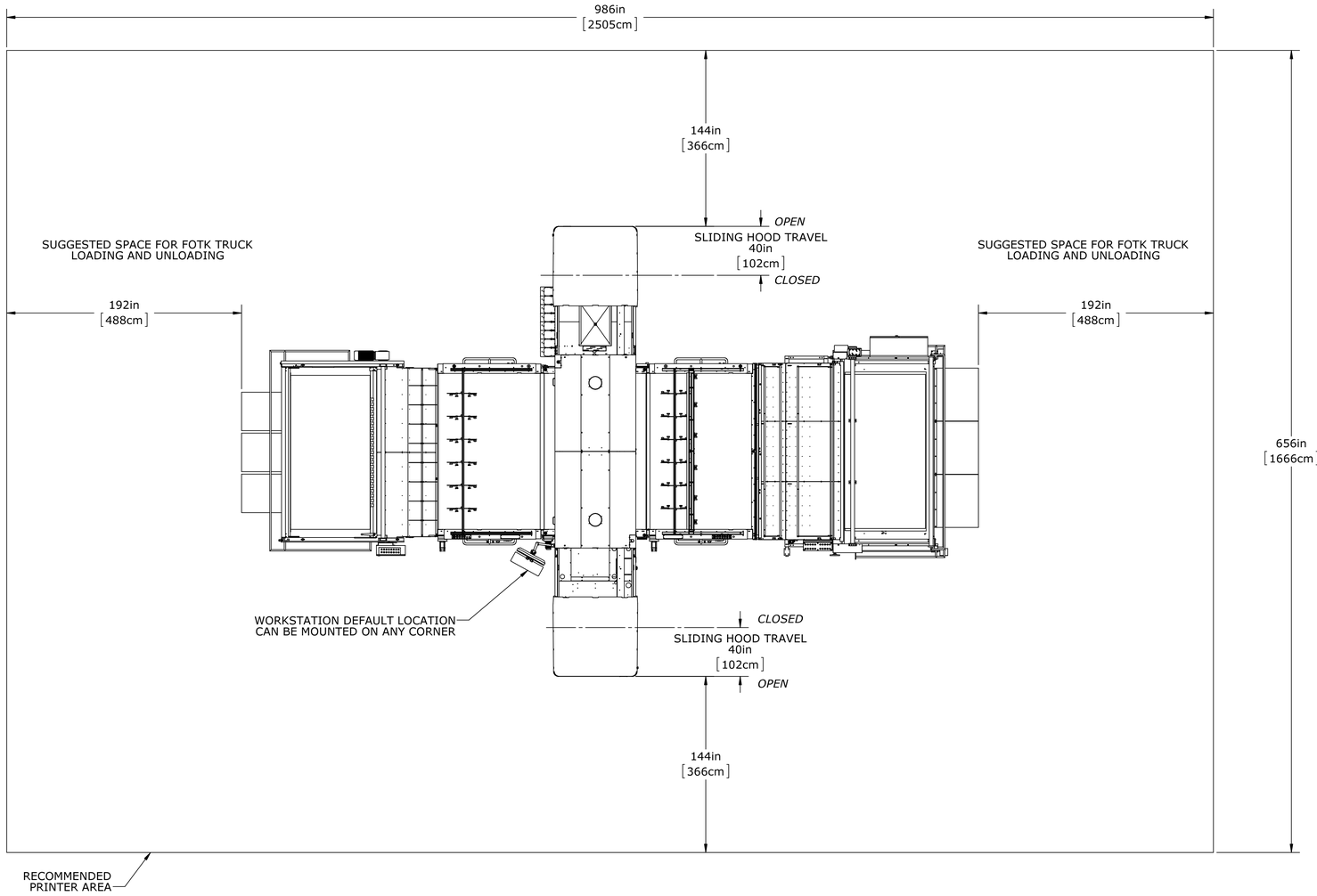


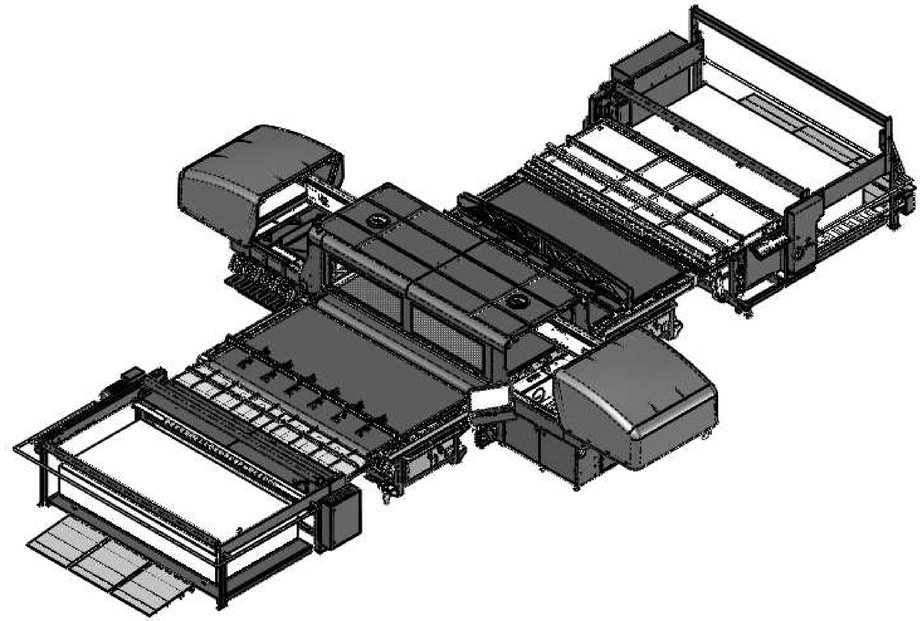

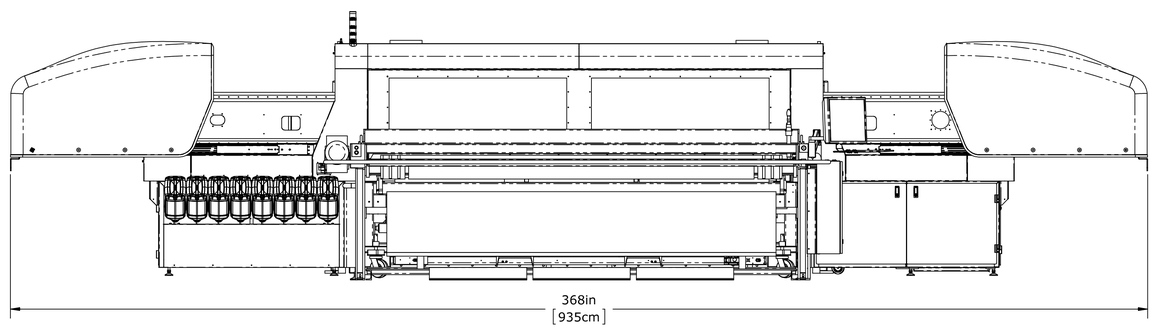


4

SLIDING HOOD MOD KIT INSTALLED 45153216
SHOWN OPEN FOR MAINTENANCE
REFERENCE SHEET 1&2 FOR ADDITIONAL DIMENSIONS

SEE SHEET 3 FOR: APPROXIMATE PRINTER OVERALL DIMENSIONS AS UNCRATED

UNLESS OTHERWISE SPECIFIED DIMENSIONS ARE IN INCHES
TOLERANCES ARE:
FRACTIONS ±1/16 | DECIMALS .X ±.03 .XX ±.01 .XXX ±.005 .XXXX ±.0010 | ANGLES .X ±.5 .XX ±.1
63
REMOVE ALL BURRS AND SHARP EDGES EXCEPT WHERE NOTED OTHERWISE
THIRD ANGLE PROJECTION

CAD GENERATED DRAWING,
DO NOT MANUALLY UPDATE
DO NOT SCALE DRAWING

**PROPRIETARY AND CONFIDENTIAL**
THE INFORMATION CONTAINED IN THIS DRAWING IS THE SOLE PROPERTY OF EFI, INC. ANY REPRODUCTION IN PART OR AS A WHOLE WITHOUT WRITTEN PERMISSION OF EFI, INC. IS PROHIBITED.

efi™

TITLE
MODEL, SITE DWG, HS SYS,
G2 FULL AUTO LOAD STACK

| | | |
|---|---|---|
| MATERIAL N/A | DRAWN KDD | DATE 9/1/2015 |
| COATING N/A | DESIGNED DBR | DATE 11/2/2012 |
| | VERSION Dwg Ver: 21 | Model Ver: 11 |
| | FILENAME 45139697 MODEL, SITE DWG, HS SYS, G2 FULL AUTO LOAD STACK | |

SIZE D | DWG. NO. 45139697 | REV. 4
SCALE 1:54 | SHEET 4 OF 4

FORM 423-11D
D021306-A

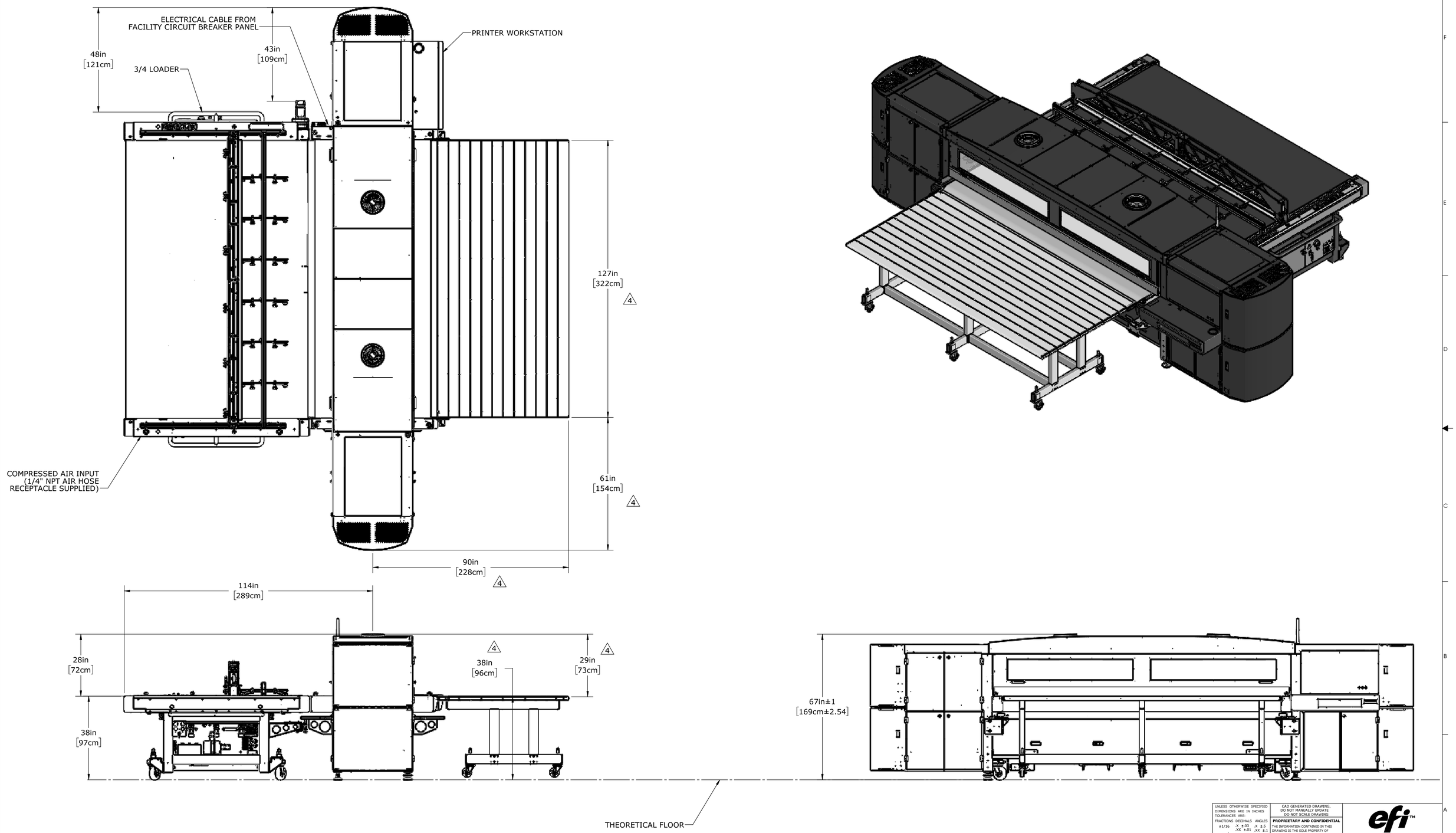


UNLESS OTHERWISE SPECIFIED DIMENSIONS ARE IN INCHES TOLERANCES ARE:

| FRACTIONS | DECIMALS | ANGLES |
|---|---|---|
| ±1/16 | .X ±.03 | .X ±.5 |
| | .XX ±.01 | .XX ±.1 |
| 63 | .XXX ±.005 | |
| | .XXXX ±.0010 | |

REMOVE ALL BURRS AND SHARP EDGES EXCEPT WHERE NOTED OTHERWISE

THIRD ANGLE PROJECTION

CAD GENERATED DRAWING, DO NOT MANUALLY UPDATE DO NOT SCALE DRAWING


**PROPRIETARY AND CONFIDENTIAL**

THE INFORMATION CONTAINED IN THIS DRAWING IS THE SOLE PROPERTY OF EFI, INC. ANY REPRODUCTION IN PART OR AS A WHOLE WITHOUT WRITTEN PERMISSION OF EFI, INC. IS PROHIBITED.


DRAWN: KDD | DATE: 3/19/2015

MATERIAL: SEE AGILE

DESIGNED | DATE

CONTING: N/A

VERSION: Dwg Ver: 24 Model Ver: 18

FILENAME: 45134992 DOC, SITE DRAWING, LX3 PRO

efi™

TITLE: DOC, SITE DRAWING, LX3 PRO

SIZE: D | DWG. NO.: 45134992 | REV.: 4

SCALE: 1:20 | SHEET 4 OF 7

FORM 423-11D
D021306-A

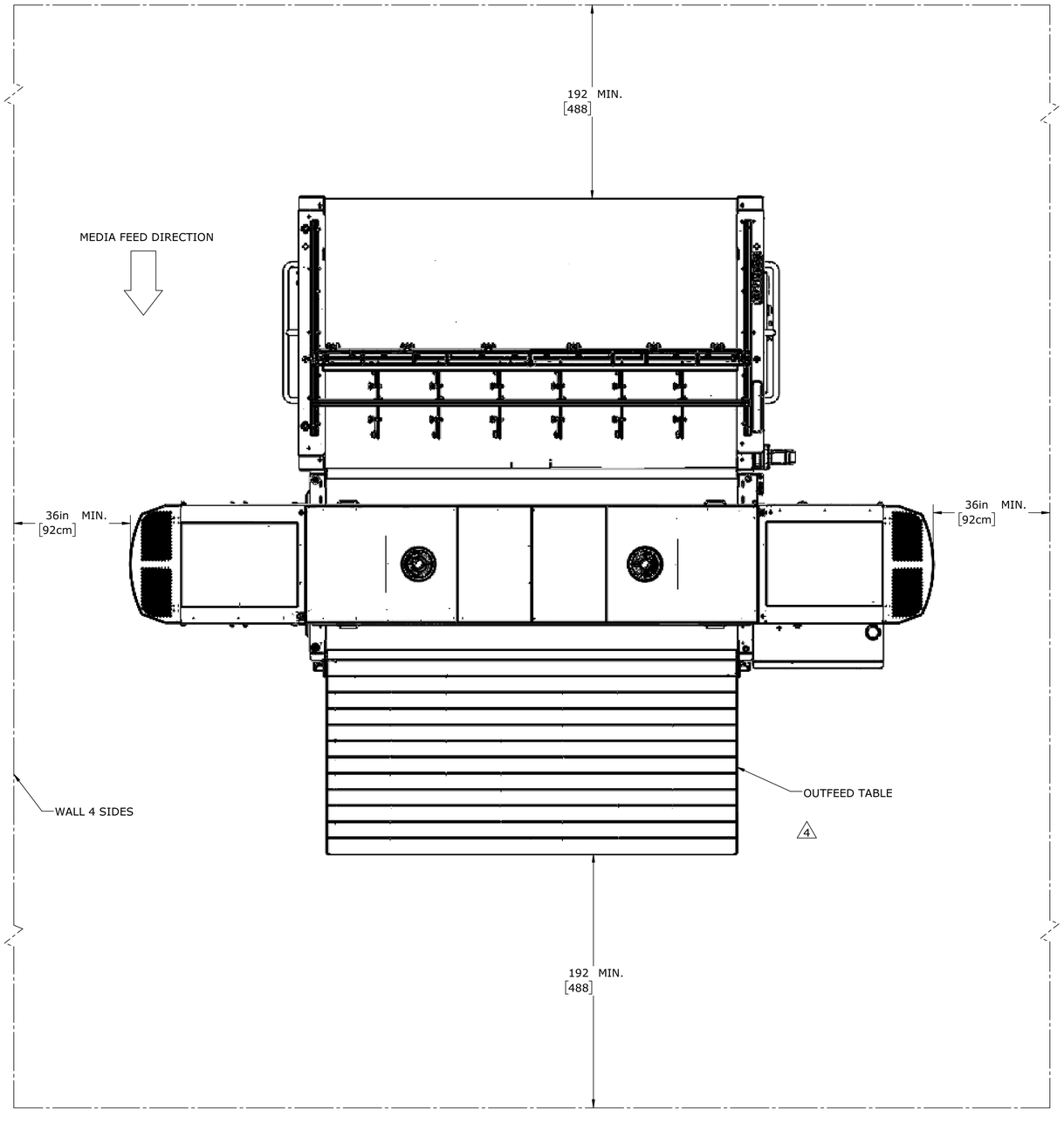


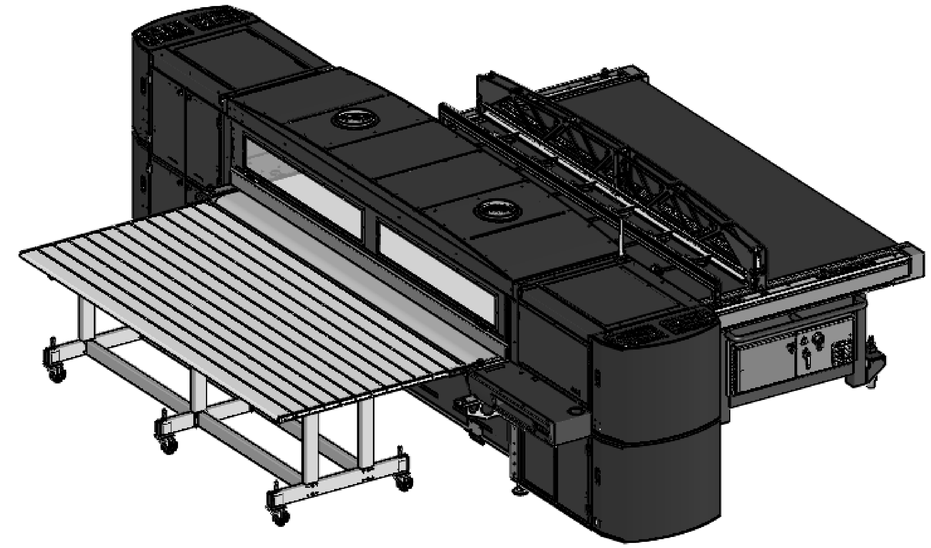

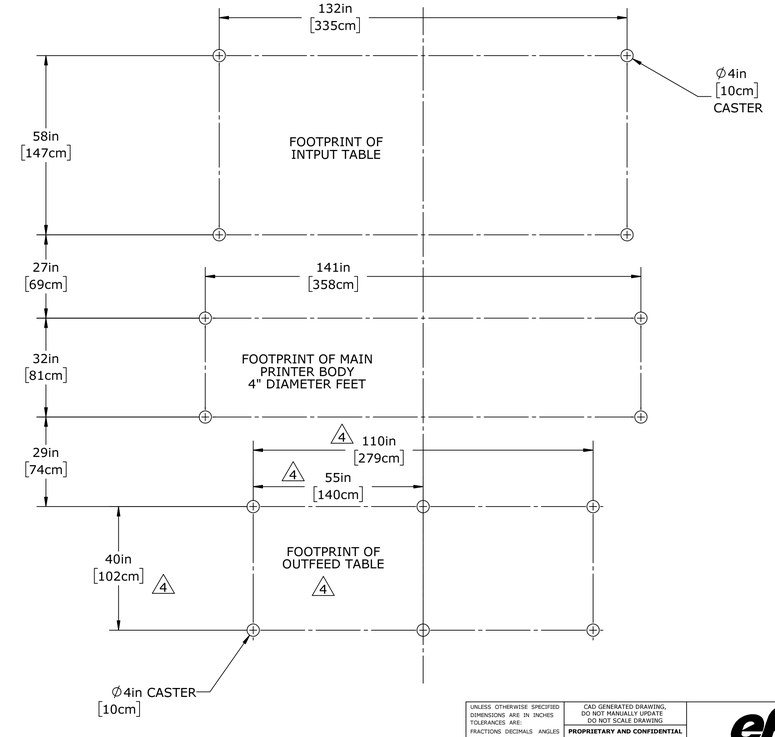


| | | |
|---|---|---|
| UNLESS OTHERWISE SPECIFIED DIMENSIONS ARE IN INCHES TOLERANCES ARE: FRACTIONS ±1/16 DECIMALS .X ±.03 .XX ±.01 .XXX ±.005 .XXXX ±.0010 ANGLES X ±.5 .XX ±.1 63 REMOVE ALL BURRS AND SHARP EDGES EXCEPT WHERE NOTED OTHERWISE THIRD ANGLE PROJECTION | CAD GENERATED DRAWING, DO NOT MANUALLY UPDATE DO NOT SCALE DRAWING. **PROPRIETARY AND CONFIDENTIAL** THE INFORMATION CONTAINED IN THIS DRAWING IS THE SOLE PROPERTY OF EFI, INC. ANY REPRODUCTION IN PART OR AS A WHOLE WITHOUT WRITTEN PERMISSION OF EFI, INC. IS PROHIBITED. | efi™ |
| | DRAWN KDD / DATE 3/19/2015 | TITLE DOC, SITE DRAWING, LX3 PRO |
| MATERIAL SEE AGILE | DESIGNED / DATE | SIZE D / DWG. NO. 45134992 / REV 4 |
| COATING N/A | VERSION Dwg Ver: 24 Model Ver: 18 | |
| | FILENAME 45134992 DOC, SITE DRAWING, LX3 PRO | SCALE 1:24 / SHEET 5 OF 7 |

FORM 423-11D
D021306-A

| REV | DESCRIPTION | DATE | DRN BY | CHECKED |
|---|---|---|---|---|
| 1 | ECO 49809: PROTOTYPE RELEASE | 4/16/2018 | CAE | DBR |
| 2 | ECO 52675 ADD DOORS IN OPEN POSITION | 2/21/2019 | RMN | DBR |

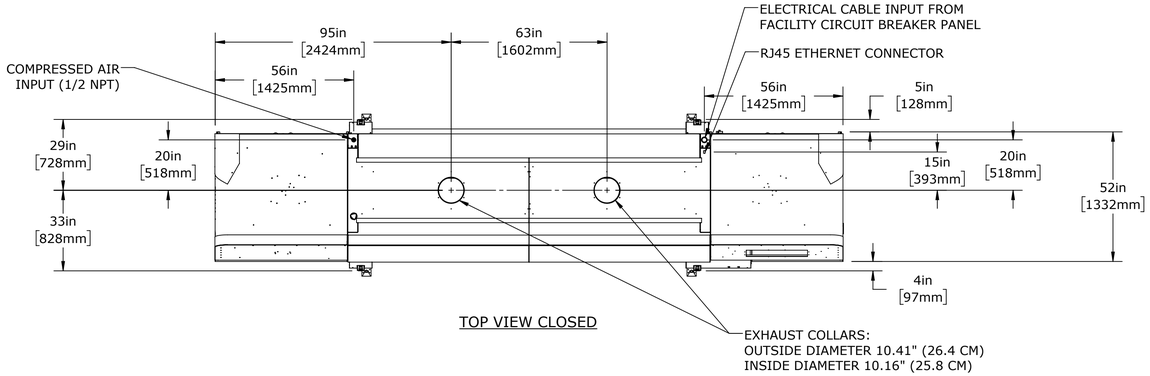


TOP VIEW CLOSED

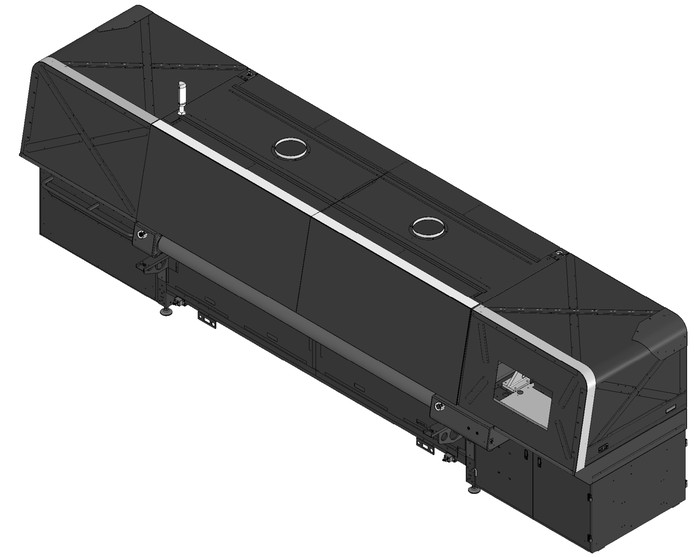

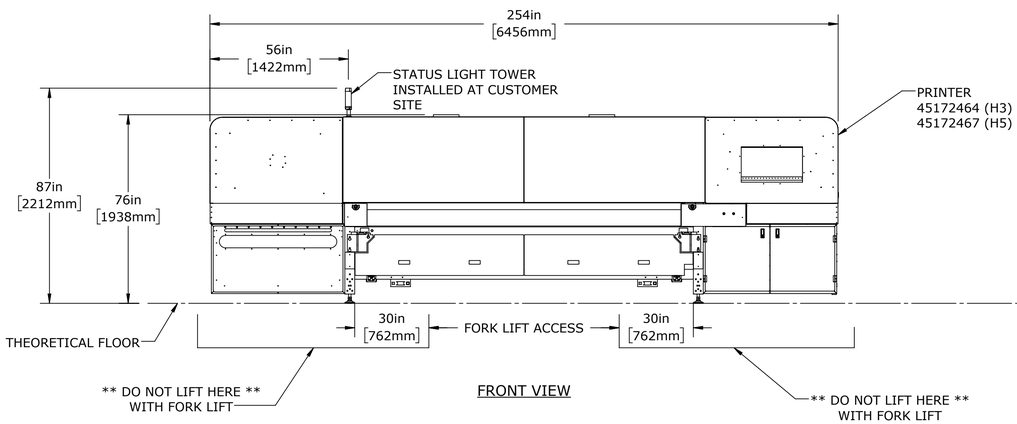


FRONT VIEW

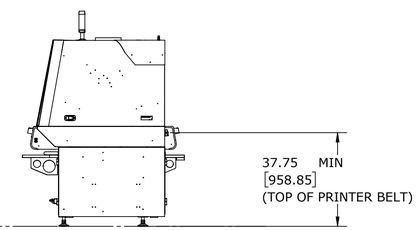


SIDE VIEW

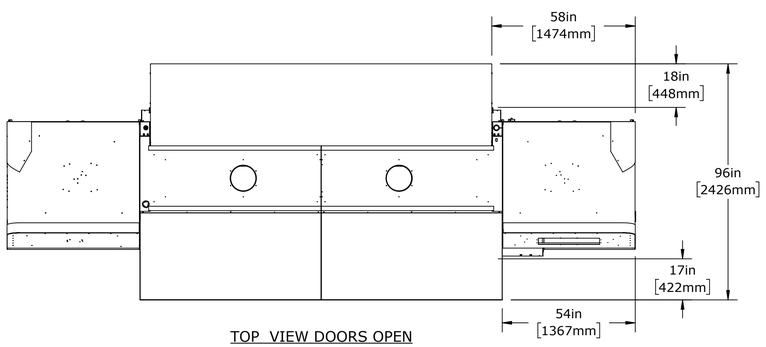


TOP VIEW DOORS OPEN

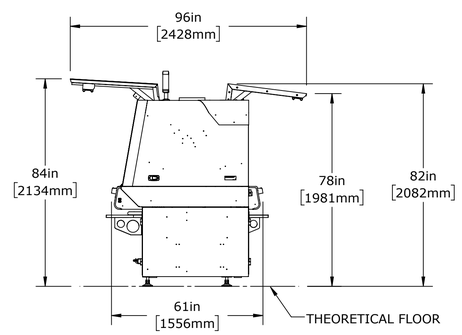


SIDE VIEW DOORS OPEN

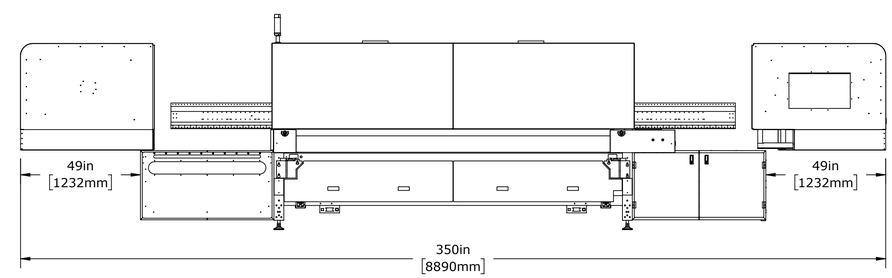


FRONT VIEW HOODS OPEN

NOTES:
1. DIMENSIONS ARE NOMINAL EXCEPT AS SHOWN (DUAL DIMENSIONS ARE IN MILLIMETERS)
2. STACKER SHOWN ON SHEET 2 MUST BE ANCHORED TO THE FLOOR, AFTER FINAL POSITION IS ESTABLISHED.
3. ELEVATED UNWINDER REQUIRES DOCKING KIT 45182839 SUPPLIED WITH WINDER. SEE 45182427 FOR WINDER INPUT REQUIREMENTS.

UNLESS OTHERWISE SPECIFIED DIMENSIONS ARE IN INCHES TOLERANCES ARE:
FRACTIONS ±1/16 DECIMALS .X ±.03 .XX ±.01 .XXX ±.005 .XXXX ±.0010 ANGLES ±.5
63 REMOVE ALL BURRS AND SHARP EDGES EXCEPT WHERE NOTED OTHERWISE
THIRD ANGLE PROJECTION

CAD GENERATED DRAWING.
DO NOT MANUALLY UPDATE
DO NOT SCALE DRAWING

**PROPRIETARY AND CONFIDENTIAL**
THE INFORMATION CONTAINED IN THIS DRAWING IS THE SOLE PROPERTY OF EFI, INC. ANY REPRODUCTION IN PART OR AS A WHOLE WITHOUT WRITTEN PERMISSION OF EFI, INC. IS PROHIBITED.

DRAWN: CAE DATE: 4/11/2018
DESIGNED DATE
MATERIAL: SEE AGILE
COATING: N/A
VERSION Dwg Ver: 12 Model Ver: 12
FILENAME 45182607 DOC, SITE DWG, H3_H5, 3_4 AUTO

efi™

TITLE: DOC, SITE DWG, H3_H5, 3_4 AUTO

SIZE D DWG. NO. 45182607 REV. 2

SCALE 1:30 SHEET 1 OF 2

FORM 423-11D

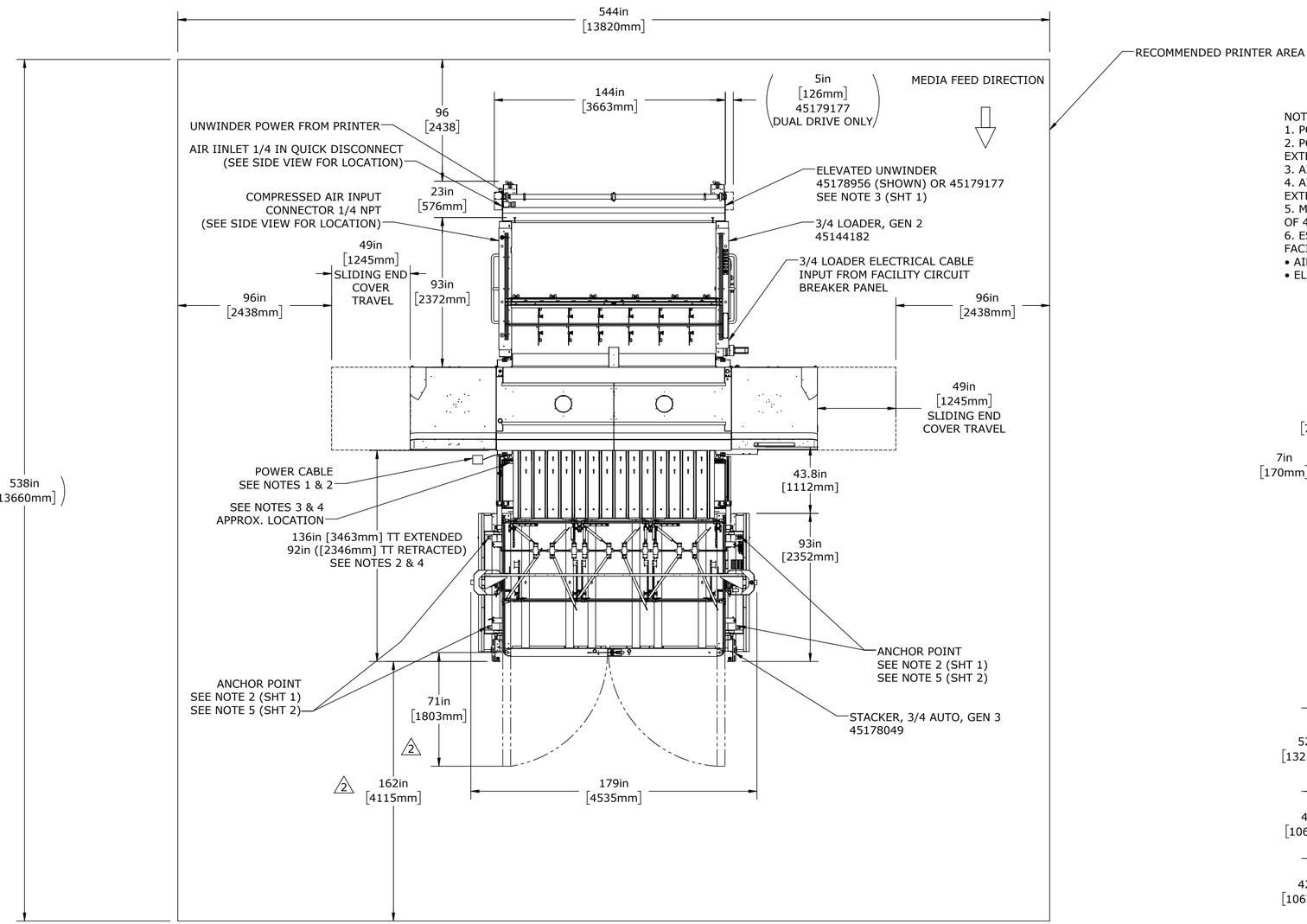


NOTES:
1. POWER REQUIREMENTS: DEFINED IN 3/4 STACKER GEN 3 ENGINEERING SPECIFICATION 45183714.
2. POWER FEED MUST ACCOMODATE THE TRANSITION TABLE (TT) IN BOTH EXTENDED AND RETRACTED POSSITIONS.
3. AIR REQUIREMENTS: CLEAN DRY AIR, 80CFM @ 90PSI
4. AIR FEED MUST ACCOMODATE THE TRANSITION TABLE (TT) IN BOTH EXTENDED AND RETRACTED POSITIONS.
5. MACHINE LAGGING REQUIREMENTS: M12 CONCRETE ANCHORS IN 4" THICK MINIMUM OF 4000 PSI CONCRETE. ANCHOR ENGAGEMENT 3.5" MINIMUM
6. ESTIMATED MACHINE WEIGHT: 4500 TO 5000 LBS

FACILITY CONNECTIONS PROVIDED:
- AIR: 12MM OD TUBE RATED FOR 200 PSI OR GREATER
- ELECTRICAL: NEMA STYLE L16-30P TWISTLOCK RECEPTACLE, 30 AMP, 4 WIRE

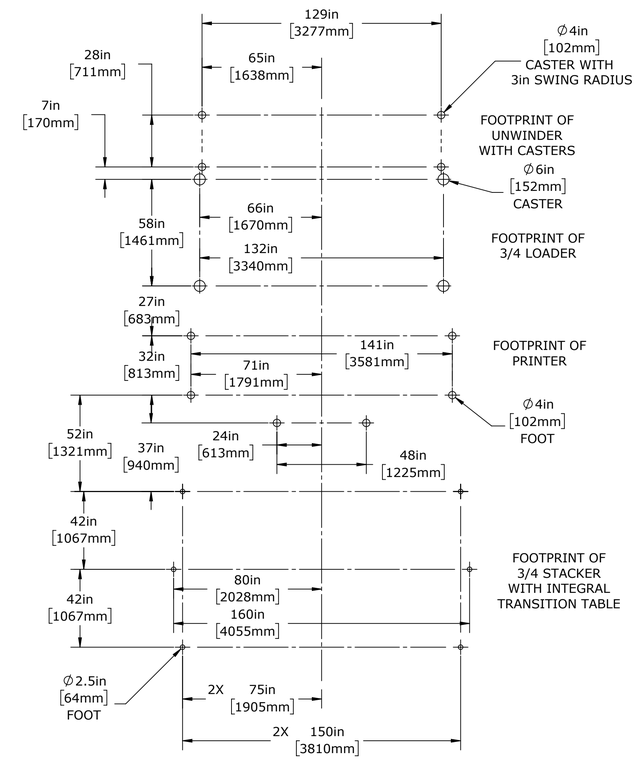


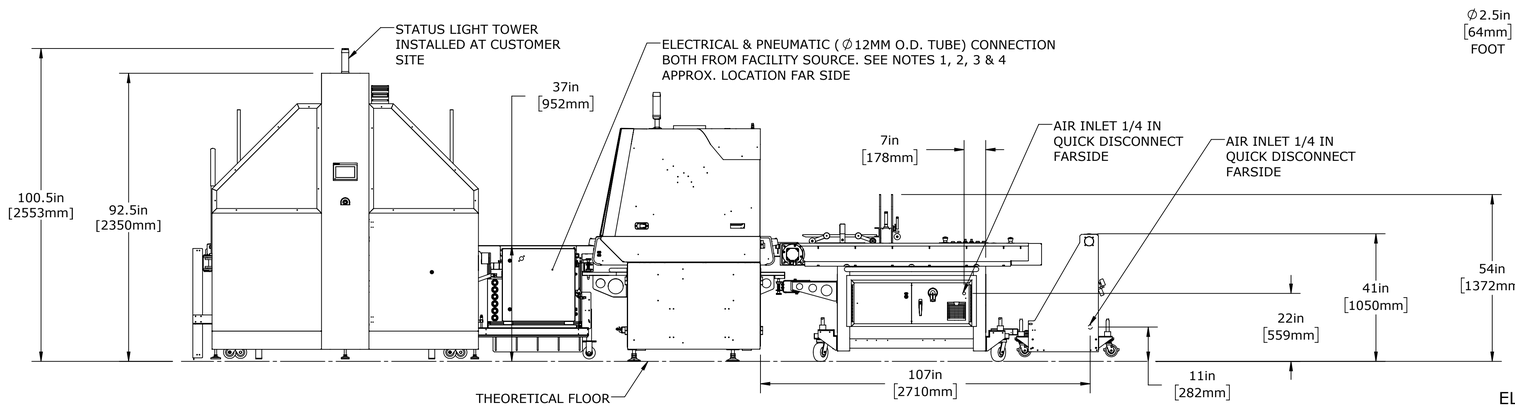


PRINTER WITH OPTIONAL
ELEVATED WINDERS & 3/4 LOADER

| | | |
|---|---|---|
| UNLESS OTHERWISE SPECIFIED DIMENSIONS ARE IN INCHES TOLERANCES ARE: FRACTIONS ±1/16 DECIMALS .X ±.03 .XX ±.01 .XXX ±.005 .XXXX ±.0010 ANGLES ±.5 ±.1 REMOVE ALL BURRS AND SHARP EDGES EXCEPT WHERE NOTED OTHERWISE THIRD ANGLE PROJECTION | CAD GENERATED DRAWING, DO NOT MANUALLY UPDATE DO NOT SCALE DRAWING **PROPRIETARY AND CONFIDENTIAL** THE INFORMATION CONTAINED IN THIS DRAWING IS THE SOLE PROPERTY OF EFI, INC. ANY REPRODUCTION IN PART OR AS A WHOLE WITHOUT WRITTEN PERMISSION OF EFI, INC. IS PROHIBITED. | efi™ |
| MATERIAL: SEE AGILE | DRAWN: CAE / DATE: 4/11/2018 | TITLE: DOC, SITE DWG, H3_H5, 3_4 AUTO |
| COATING: N/A | DESIGNED: / DATE: | SIZE: D / DWG. NO: 45182607 / REV: 2 |
| | VERSION: Dwg Ver: 12 Model Ver: 12 FILENAME: 45182607 DOC, SITE DWG, H3_H5, 3_4 AUTO | SCALE: 1:40 / SHEET 2 OF 2 |

FORM 423-11D