YORK	Air-Cooled Screw Liquid Chillers	
Installation, Operation, Maintenance	Supersedes: 201.28-NM1.1 (724)	Form 201.28-NM1.1 (1225)

035-23219-100

Model YVAA Style A
Air-Cooled Screw Liquid Chillers with Variable Speed Drive
Frame Sizes 015 to 052
150 ton to 500 ton

525 kW to 1750 kW
Two Compressor
50 Hz and 60 Hz

R-134a or R-513A

Issue Date:
December 22, 2025

Important

Read before proceeding

General safety guidelines

This equipment is a relatively complicated apparatus. During rigging, installation, operation, maintenance, or service, individuals may be exposed to certain components or conditions including, but not limited to: heavy objects, refrigerants, materials under pressure, rotating components, and both high and low voltage. Each of these items has the potential, if misused or handled improperly, to cause bodily injury or death. It is the obligation and responsibility of rigging, installation, and operating/service personnel to identify and recognize these inherent hazards, protect themselves, and proceed safely in completing their tasks. Failure to comply with any of these requirements could result in serious damage to the equipment and the property in which it is situated, as well as severe personal injury or death to themselves and people at the site.

This document is intended for use by owner-authorized rigging, installation, and operating/service personnel. It is expected that these individuals possess independent training that will enable them to perform their assigned tasks properly and safely. It is essential that, prior to performing any task on this equipment, this individual shall have read and understood the on-product labels, this document and any referenced materials. This individual shall also be familiar with and comply with all applicable industry and governmental standards and regulations pertaining to the task in question.

Safety symbols

The following symbols are used in this document to alert the reader to specific situations:

DANGER

Indicates a possible hazardous situation which will result in death or serious injury if proper care is not taken.

CAUTION

Identifies a hazard which could lead to damage to the machine, damage to other equipment and/or environmental pollution if proper care is not taken or instructions and are not followed.

WARNING

Indicates a potentially hazardous situation which will result in possible injuries or damage to equipment if proper care is not taken.

NOTE

Highlights additional information useful to the technician in completing the work being performed properly.

WARNING

External wiring, unless specified as an optional connection in the manufacturer's product line, is not to be connected inside the control cabinet. Devices such as relays, switches, transducers and controls and any external wiring must not be installed inside the micro panel. All wiring must be in accordance with Johnson Controls' published specifications and must be performed only by a qualified electrician. Johnson Controls will NOT be responsible for damage/problems resulting from improper connections to the controls or application of improper control signals. Failure to follow this warning will void the manufacturer's warranty and cause serious damage to property or personal injury.

© 2025 Johnson Controls. All rights reserved.

WARNING

Working with chiller vessels which are designed to contain contents under pressure must only be conducted by fully qualified technicians who have been certified in accordance with EPA Section 608 of the Clean Air Act requirements for the US or equivalently the Federal Halocarbon Regulations and the Refrigerant Code of Practice for Canada. This equipment is only intended for installation in locations that are not accessible to the general public. Further, this equipment is not intended for use by persons (including children) with reduced physical, sensory or mental capabilities, or lack of experience and knowledge. Failure to meet this requirement can result in damage to equipment, release of refrigerant into the environment, contamination of the operating space for the equipment and pose a risk of personal injury or death. It is the responsibility of any service technician or operator to adhere to these requirements.

Changeability of this document

In complying with the Johnson Controls® policy for continuous product improvement, the information contained in this document is subject to change without notice. Johnson Controls makes no commitment to update or provide current information automatically to the manual or product owner. Updated manuals, if applicable, can be obtained by contacting the nearest Johnson Controls Service office or accessing the Johnson Controls Knowledge Exchange website at https://docs.johnsoncontrols.com/chillers/

It is the responsibility of rigging, lifting, and operating/service personnel to verify the applicability of these documents to the equipment. If there is any question regarding the applicability of these documents, rigging, lifting, and operating/service personnel should verify whether the equipment has been modified and if current literature is available from the owner of the equipment prior to performing any work on the chiller.

Conditioned-based maintenance

Traditional chiller maintenance is based upon assumed and generalized conditions. In lieu of the traditional maintenance program, a Johnson Controls YORK Conditioned Based Maintenance (CBM) program can be substituted. This CBM service plan is built around the specific needs for the chiller, operating conditions, and annualized impact realized by the chiller. Your local Johnson Controls Branch can propose a customized Planned Service Agreement that leverages real time and historical data, delivering performance reporting, corrective actions required and data enabled guidance for optimal operation and lifecycle assurance. The program will include fault detection diagnostics, operation code statistics, performance based algorithms and advance rules based rationale delivered by the Johnson Controls Connected Equipment Portal.

© 2025 Johnson Controls. All rights reserved.

Associated literature

Manual description	Form number
Equipment Pre-Startup and Startup Checklist	201.28-CL2
YVAA Style A Frame Size 015 - 027, 2 Compressor 60 Hz (150-350 Tons) YVAA Style A Frame Size 054 - 098, 2 Compressor 50 Hz (525-950 KW) Manufactured before April 2012	201.28-RP1
YVAA Style A Frame Size 015 - 052, 2 Compressor 50 & 60 Hz (150-500 Tons) (Manufactured after April 2012 to before September 2014)	201.28-RP2
YVAA Style B Frame Size 015 - 052, 2 Compressor 50 & 60 Hz (150-500 Tons) (Manufactured after September 2014)	201.28-RP3

UNIT NOMENCLATURE

YVAA 074 WXYZ 46 A A

Base Product Type
Y = YORK
V= Variable Speed Screw
A = Air Cooled Chiller
A = Design Series

Frame Size

Selected Configuration (Unit Designator)
W = Condenser Code
X = Evaporator Code
Y = Compressor Code
Z = Condenser Fan & Sound Kit Code

Level / Refrigerant
A = Refrigerant R-134a
B = Refrigerant R-513A

Development Level
(Engineering Change or PIN)

Voltage
17 = 200 / 3 / 60
28 = 230 / 3 / 60
40 = 380 / 3 / 60
46 = 460 / 3 / 60
50 = 400 / 3 / 50
58 = 575 / 3 / 60

LD23524a

ASHRAE 90.1 Compliant

Products are produced at a facility whose quality-management systems are ISO9001 certified.

© 2025 Johnson Controls. All rights reserved.

WARNING

The Control/VSD Cabinet contains lethal high AC and DC voltages. Before performing service inside the cabinet, remove the AC supply feeding the chiller and verify using a non-contact voltage sensor.

WARNING

The DC voltage on the VSD DC Bus will take 5 minutes to bleed off, after AC power is removed. Always check the DC Bus Voltage with a Voltmeter to assure the capacitor charge has bled off before working on the system.

WARNING

NEVER short out the DC Bus to discharge the filter capacitors.

WARNING

NEVER place loose tools, debris, or any objects inside the Control Panel/VSD Cabinet.

WARNING

NEVER allow the Control Panel VSD Cabinet doors to remain open if there is a potential for rain to enter the panel. Keep doors closed and assure all latches are engaged on each door unless the unit is being serviced.

WARNING

ALWAYS lockout the disconnect supplying AC to the chiller.

WARNING

The 1L Line Inductor will reach operating temperatures of over 150°C (300°F.) DO NOT open panel doors during operation. Assure the inductor is cool whenever working near the inductor with power OFF.

Revision notes

Revisions made to this document are indicated in the following table. These revisions are to technical information, and any other changes in spelling, grammar, or formatting are not included.

Affected pages	Description
41	Updated: *Location requirements*
52	Note added
117	Updated: *Operating controls*
117	Added: *Microboard Overview – IPU2*
117	Added: *Microboard Overview – IPU3*
124	Added: *Figure 31 - 331-03478-xxx microboard with IPU3 microprocessor*
125	Updated: *Building automation system (BAS) communications*
126	Updated: *E-Link or SC-EQ interface using YorkTalk Protocol*
127	Note added
128	Added: *Figure 32 - SC-EQ Communication Card Connections for chillers with the 03478 microboard and IPU2 processor YCAV / YCIV / YVAA / YVWA / YVFA*
129	Added: *Figure 33 - SC-EQ Communication Card Connections for chillers with the 03478 microboard and IPU3 processor YCAV / YCIV / YVAA / YVWA / YVFA*
130	Added: *Program update / SD card features IPU2*
131	Added: *Program update / SD card features IPU3*
133	Added: *Table 16 - Data logging IPU2 and IPU3*
137	Added: *System Backup and Restore*

© 2025 Johnson Controls. All rights reserved.

This page is intentionally left blank.

© 2025 Johnson Controls. All rights reserved.

Table of Contents

Section 1: General chiller information and safety 13
Introduction 13
Warranty 13
Quality assurance and safety 14
Fluorinated greenhouse gases 14
Responsibility for safety 14
About this manual 14
Misuse of equipment 14

Section 2: Product description 17
General system description 17
Semi-hermetic YORK twin-screw compressors 25
Evaporator 25
Condenser 25
Refrigerant circuit 25
Electrical 25
Building automation system capabilities 26
Microcomputer control center 26
Accessories and options 27
Fan options 27
Condenser coils 27

Section 3: Rigging, handling, and storage 31
Lifting weights 31
Delivery and storage 31
Inspection 32
Moving the chiller 32
Unit removal from shipping container 32
Lifting using lugs 32
Lifting using shackles 32

Section 4: Installation 41
Location requirements 41
Outdoor installations 41
Location clearances 41
Vibration isolators 43
Shipping braces 43
Chilled liquid piping 43
Evaporator pressure drop 44
Water treatment 46
Pipework arrangement 46
Minimum water volume 46
Leaving water temperature out of range 46
Thermal storage 47
Variable primary flow 47
Connection types and sizes 47

© 2025 Johnson Controls. All rights reserved.

Table of Contents, continued

Evaporator connections 47
Refrigerant relief valve piping 49
Electrical connection 49
Power wiring 50
Power supply wiring 50
115 VAC control supply transformer 50
Control wiring 51
Volts free contacts 51
System inputs 51
Power supply wiring 53
Customer control wiring 55
Thermal dispersion flow switch connections 57

Section 5: Technical data 72
Elastomeric isolator installation 99
Elastomeric isolator specifications 100
One inch deflection isolator installation 101
One inch deflection spring isolator specifications 102
Two inch deflection, isolator installation and adjustment 103
Two inch deflection, restrained spring isolator specifications 104

Section 6: Commissioning 106
Preparation 106
First time startup 109
General operation 110

Section 7: Operation 117
Operating controls 117
Microboard Overview – IPU2 117
Microboard Overview – IPU3 117
Basic operating sequence 121
Power supplies and LEDs 122
Building automation system (BAS) communications 125
E-Link or SC-EQ interface using YorkTalk Protocol 126
Program update / SD card features IPU2 130
Program update / SD card features IPU3 131
System Backup and Restore 137
Unit warning 139
Unit safeties 139
System safeties, faults 141

Section 8: Micropanel 147
Unit data key 150
System data keys 1 through 4 152
VSD data key 155

© 2025 Johnson Controls. All rights reserved.

Table of Contents, continued

History key 158
Setpoints key 165
Program key 167
Options key 170
Date/time and schedule keys 173
Manual override key 176
Print key 177
System switches key 180

Section 9: Maintenance 181
General requirements 181
Checking system for leaks 182
System pressure test 182
System evacuation 185
Vacuum dehydration 185
Dehydration 187
Removing the refrigerant charge for service 191
Checking and trimming the refrigerant charge 191
Checking the refrigerant charge during unit shutdown 192
Draining the glycol liquid 192
Microchannel coil cleaning 192
Chilled liquid system maintenance 195
Maintenance requirements for YVAA chillers 197
R-134a conversion table - pressure to saturated temperatures 201
R-513A conversion table - pressure to saturated temperature 202
R-513A conversion table - temperature to equivalent pressure 203

Section 10: Decommissioning, dismantling, and disposal 209
Temperature 210
Notes 211

© 2025 Johnson Controls. All rights reserved.

List of Figures

Figure 1 - YVAA air-cooled screw liquid chiller with variable speed drive 17
Figure 4 - YVAA Piping and Instrumentation Diagram 18
Figure 2 - Chiller control system 24
Figure 3 - View of YORK control center user interface 26
Figure 5 - Lifting lug 32
Figure 6 - Lifting using lugs 32
Figure 7 - Acceptable minimum clearances around and between units 42
Figure 8 - Two pass water pressure drop, English units 45
Figure 9 - Three pass water pressure drop, English units 45
Figure 10 - Pipework arrangement 46
Figure 11 - Leaving water temperature out of range suggested layout 46
Figure 12 - Suggested layout for applications with a flow rate less than the evaporator minimum allowable flow rate 47
Figure 13 - Suggested layout for applications with a flow rate greater than the evaporator maximum allowable flow rate 47
Figure 14 - Grooved nozzle 47
Figure 15 - Flange for GB vessels 49
Figure 16 - Flange attachment 49
Figure 17 - Single point power wiring 53
Figure 18 - Dual point power wiring 54
Figure 19 - Customer control connections 55
Figure 20 - Single point kit connection 56
Figure 21 - Thermal dispersion flow switch connections 57
Figure 22 - Reserved customer wiring entry 58
Figure 23 - Water box heater wiring box 58
Figure 24 - YVAA dimensions 91
Figure 25 - LED indicator buttons 107
Figure 26 - Flow switch set 108
Figure 27 - Flow below the representation range 108
Figure 28 - Flow exceeds the representation range 108
Figure 29 - Keyboard and display 117
Figure 30 - 331-03478-xxx microboard with IPU2 processor 123
Figure 31 - 331-03478-xxx microboard with IPU3 microprocessor 124
Figure 32 - SC-EQ Communication Card Connections for chillers with the 03478 microboard and **IPU2** processor YCAV / YCIV / YVAA / YVWA / YVFA 128
Figure 33 - SC-EQ Communication Card Connections for chillers with the 03478 microboard and **IPU3** processor YCAV / YCIV / YVAA / YVWA / YVFA 129
Figure 34 - Service connections 182
Figure 37 - Leak test hold times 183
Figure 35 - Evacuation of chiller operation 186
Figure 36 - Saturation curve 187

© 2025 Johnson Controls. All rights reserved.

List of Tables

Table 1 - 035-24013-000 YVAA Piping and Instrumentation Legend 20
Table 2 - Unit rigging 33
Table 3 - Minimum evaporator tube removal clearance 42
Table 4 - Evaporator connections dimensions 48
Table 5 - Electrical lug data 60
Table 6 - Physical data - Round tube coil 77
Table 7 - Optional one-pass evaporator 79
Table 8 - Standard two-pass, rear inlet/outlet evaporator 83
Table 9 - Optional three-pass rear inlet/front outlet evaporator 87
Table 10 - Isolator selection and mounting locations 93
Table 11 - Values required for BAS communication: IPU2 only 127
Table 12 - Communication protocols and point mapping 128
Table 13 - Flash card update error XXXXX 130
Table 14 - Software update errors 132
Table 15 - Flash errors 132
Table 16 - Data logging IPU2 and IPU3 133
Table 17 - Low differential oil pressure cutout 143
Table 18 - Discharge pressure load limiting/unloading 144
Table 19 - Suction pressure load limiting/unloading 144
Table 20 - Start inhibit sensor thresholds 145
Table 21 - Sensor min/max outputs 154
Table 22 - Compressor motor overload settings 156
Table 23 - Setpoint limits 166
Table 24 - Programmable operating parameters 169
Table 25 - Printout types 177
Table 26 - System pressures 186
Table 27 - R-134a pressure to saturated temperature conversion 189
Table 28 - R-513A pressure to saturated temperature conversion 189
Table 29 - Cleaning materials 195
Table 30 - Troubleshooting guide 198
Table 31 - R-134a pressure to saturated temperature conversion 201
Table 32 - R-513A refrigerant pressure to saturated temperature 202
Table 33 - R-513A Refrigerant temperature to pressure 203
Table 34 - Temperature input voltage sensor (Measured signal to shield at the sensor) 204
Table 35 - Outside air temperature sensor input voltage, measured signal to shield at the sensor 205
Table 36 - Pressure transducer output voltage, measured signal to return at the transducer 206
Table 37 - Motor temperature sensor resistance (Check at the motor) 207
Table 38 - SI metric conversion 210

© 2025 Johnson Controls. All rights reserved.

This page is intentionally left blank.

© 2025 Johnson Controls. All rights reserved.

Section 1: General chiller information and safety

Introduction

YORK® YVAA chillers are manufactured to the highest design and construction standards to ensure high performance, reliability and adaptability to all types of air conditioning installations.

The unit is intended for cooling water or glycol solutions and is not suitable for purposes other than those specified in this manual.

Rigging and lifting should only be done by a professional rigger in accordance with a written rigging and lifting plan. The most appropriate rigging and lifting method will depend on job specific factors, such as the rigging equipment available and site needs. Therefore, a professional rigger must determine the rigging and lifting method to be used, and it is beyond the scope of this manual to specify rigging and lifting details.

NOTE

The rigger should locate the center of gravity through trial lifts to account for possible variations in unit configurations. Contact your nearest Johnson Controls sales office for weight data. See *Section 3: Rigging, handling, and storage* ***for more details.***

This manual contains all the information required for correct installation and commissioning of the unit, together with operating and maintenance instructions. The manual should be read thoroughly before attempting to operate or service the unit.

All procedures detailed in the manual, including installation, commissioning and maintenance tasks must only be performed by suitably trained and qualified personnel.

The manufacturer will not be liable for any injury or damage caused by incorrect installation, commissioning, operation or maintenance resulting from a failure to follow the procedures and instructions detailed in the manual.

Warranty

Johnson Controls warrants YVAA chillers in accordance with the *Limited Warranty Engineered Systems Equipment* procedure. Refer to *Form 50.05-NM2*.

Johnson Controls warrants all equipment and materials against defects in workmanship and materials for a period of eighteen months from date of shipment or 12 months from date of startup, whichever comes first, unless labor or extended warranty has been purchased as part of the contract. The warranty is limited to parts only replacement and shipping of any faulty part, or sub-assembly, which has failed due to poor quality or manufacturing errors. All claims must be supported by evidence that the failure has occurred within the warranty period, and that the unit has been operated within the designed parameters specified.

All warranty claims must specify the unit model, serial number, order number and run hours/starts. Model and serial number information is printed on the unit identification plate.

The unit warranty will be void if any modification to the unit is carried out without prior written approval from Johnson Controls. For warranty purposes, the following conditions must be satisfied:

- The initial start of the unit must be carried out by trained personnel from an authorized Johnson Controls Service Center. See *Section 6: Commissioning* for more information.
- Only genuine YORK approved spare parts, oils, coolants, and refrigerants must be used.
- All the scheduled maintenance operations detailed in this manual must be performed at the specified times by suitably trained and qualified personnel. See *Section 9: Maintenance* for more information.
- Failure to satisfy any of these conditions will automatically void the warranty. Refer to *Form 50.05-NM2* for complete details.

© 2025 Johnson Controls. All rights reserved.

Quality assurance and safety

YVAA chillers are designed within EN ISO 9001 and built within an EN ISO 9002 accredited manufacturing organization.

Units conform with the following European Directives:

- Machinery Directive (2006/42/EC)
- EMC Directive (2004/108/EC)
- Pressure Equipment Directive (97/23/EC)
- Low Voltage Directive (2006/95/EC)
- Safety Code for Mechanical Refrigeration (EN378-2(2008))

CE/PED marked units conform to the following standards:

- Machinery Directive (2006/42/EC).
- EMC Directive (2004/108/EC).
- Pressure Equipment Directive (97/23/EC).
- Low Voltage Directive (2006/95/EC).
- Safety Code for Mechanical Refrigeration (EN378-2(2008)).

ETL/ASME marked units conform to the following standards:

- ANSI/ASHRAE 15 – Safety Code for Mechanical Refrigeration.
- ANSI/ASHRAE 34 – Number Designation and Safety Classification of Refrigerants.
- ANSI/NFPA 70 – National Electrical Code (NEC).
- ASME Boiler and Pressure Vessel Code, Section VIII, Division 1.

GB marked units conform to the following standards:

- GB5226.1 Safety of machinery- Electrical equipment of machines – Part 1: General requirements.
- GB25131 Safety requirements for water chiller (heat pump) using the vapor compression cycle.

Fluorinated greenhouse gases

- This equipment contains fluorinated greenhouse gases covered by the Kyoto Protocol.
- The global warming potential of the refrigerant R134a is 1300. The global warming potential for R513A is 546. Both use the integrated time of 100 years based on IPCC 5th report 2013, Table 8.A.1.
- The refrigerant quantity is as stated in *Table 5 on page 60* of this document.
- The fluorinated greenhouse gases in this equipment may not be vented to the atmosphere.
- This equipment should only be serviced by qualified technicians.

Responsibility for safety

Every care has been taken in the design and manufacture of the unit to ensure compliance with the safety requirements listed above. However, the individual rigging, lifting, maintaining, operating or working on any machinery is primarily responsible for:

- Personal safety, safety of other personnel, and the machinery.
- Correct utilization of the machinery in accordance with the procedures detailed in the manual.

About this manual

The contents of this manual include suggested best working practices and procedures. These are issued for guidance only, and they do not take precedence over the above stated individual responsibility and/or local safety regulations.

This manual and any other document supplied with the unit are the property of Johnson Controls which reserves all rights. They may not be reproduced, in whole or in part, without prior written authorization from an authorized Johnson Controls representative.

Misuse of equipment

Suitability for Application

The unit is intended for cooling water or glycol solutions and is not suitable for purposes other than those specified in these instructions. Any use of the equipment other than its intended use, or operation of the equipment contrary to the relevant procedures may result in injury to the operator, or damage to the equipment.

© 2025 Johnson Controls. All rights reserved.

The unit must not be operated outside the design parameters specified in this manual.

Structural support

Structural support of the unit must be provided as indicated in these instructions. Failure to provide proper support may result in injury to the operator, or damage to the equipment and/or building.

Mechanical strength

The unit is not designed to withstand loads or stresses from adjacent equipment, pipework or structures. Additional components must not be mounted on the unit. Any such extraneous loads may cause structural failure and may result in injury to the operator, or damage to the equipment.

General access

There are a number of areas and features, which may be a hazard and potentially cause injury when working on the unit unless suitable safety precautions are taken. It is important to ensure access to the unit is restricted to suitably qualified persons who are familiar with the potential hazards and precautions necessary for safe operation and maintenance of equipment containing high temperatures, pressures and voltages.

Pressure systems

The unit contains refrigerant vapor and liquid under pressure, release of which can be a danger and cause injury. The user should ensure that care is taken during installation, operation and maintenance to avoid damage to the pressure system. No attempt should be made to gain access to the component parts of the pressure system other than by suitably trained and qualified personnel.

Electrical

The unit must be grounded. No installation or maintenance work should be attempted on the electrical equipment without first switching power OFF, isolating and locking-off the power supply. Servicing and maintenance on live equipment must not be attempted. No attempt should be made to gain access to the control panel or electrical enclosures during normal operation of the unit.

Caution:

This equipment (Class A, Group 1) is designed and manufactured for use in an industrial environment, in accordance with EN 61000-6-2:2005 and EN 61000-6 4:2007 (with EN 55011:2007 limits). It is not intended to be used on a low-voltage public network which supplies domestic premises. Radio frequency interference may occur if it is used on a low voltage public network.

This equipment equipped with VSD, may generate conducted and radiated disturbances, which may interfere with or damage susceptible connected apparatus.

Generally accepted engineering standards and practices should be followed to ensure trouble-free and EMC compliant electrical installation. Installations must be supervised or completed by a competent person in accordance with EN 13313.

Special considerations depending on the application:

- Industry standard grounding or *earthing* practices for the equipment and installation.
- Use of shielded or special cables (power and/or control).
- Use of metallic conduit and/or cable trays for power and control cables connected to equipment.
- Cable segregation (in order to avoid the risk of crosstalk or cross interference to signal cables, the power cables must be segregated from signal cables).
- Dedicated isolation transformer.
- Use of additional EMC filters.

It is the responsibility of a designated System Integrator to take proper steps assuring the Electromagnetic Compatibility of both equipment and installation as a system.

Rotating parts

Fan guards must be fitted at all times and not removed unless the power supply has been isolated. If ductwork is to be fitted, requiring the wire fan guards to be removed, alternative safety measures must be taken to protect against the risk of injury from rotating fans.

Sharp edges

The fins on the air-cooled condenser coils have sharp metal edges. Reasonable care should be taken when working in contact with the coils to avoid the risk of minor abrasions and lacerations. The use of gloves is recommended.

Frame rails, brakes, and other components may also have sharp edges. Reasonable care should be taken when working in contact with any components to avoid risk of minor abrasions and lacerations.

© 2025 Johnson Controls. All rights reserved.

Refrigerants and oils

Refrigerants and oils used in the unit are generally nontoxic, non-flammable and non-corrosive, and pose no special safety hazards. Use of gloves and safety glasses is, however, recommended when working on the unit. The buildup of refrigerant vapor, from a leak for example, does pose a risk of asphyxiation in confined or enclosed spaces and attention should be given to good ventilation.

Use only the refrigerant specifically designated for the unit. Any other type of refrigerant may cause damage to the equipment and will void the warranty.

High temperature and pressure cleaning

High temperature and pressure cleaning methods (e.g. steam cleaning) should not be used on any part of the pressure system as this may cause operation of the pressure relief devices. Detergents and solvents, which may cause corrosion, should also be avoided.

Emergency shutdown

In case of emergency , the control panel is fitted with an incoming supply circuit breaker with a red and yellow handle which can be used as the emergency stop device. When operated it removes the electrical supply to the inverter, fans, and control circuit thus shutting down the unit.

Generator operation

The variable speed drive can operate on a generator, provided that the generator's output voltage can be maintained within the voltage specifications for the drive. When switching from utility power to generator power, a minimum of a 10 second delay must be provided. This same delay is required when switching power back from generator power to utility power, un less a synchronized transfer system is used.

Nominal voltage and utilization voltage range

For optimal chiller performance, the average supply voltage to the chiller should match the nominal voltage listed on the chiller nameplate. Due to the variability that can occur in normal utility supply voltage, the chiller is designed to continue to operate over the entire utilization voltage range listed on the chiller nameplate. Continuous application of supply voltage at or near the limits of the utilization voltage range may impact the chiller's ability to operate correctly during variations in supply voltage that normally occur in utility supply systems.

MSDS information

Manufacturer Safety Data Sheets (MSDS) information can be obtained by calling (800) 451-8346 in the U.S. or by emailing MSDS@3Ecompany.com. Provide the product name, manufacturer, part number, and the specific language required. For additional safety information, refer to https://my.jci.com/sites/BE/NASafety.

Safety labels

White symbol on blue background. For safe operation, read the Instructions first.

Black symbol on yellow background. Warning: This machine may start automatically without prior warning.

Black symbol on yellow background. Warning: Hot surface.

Black symbol on yellow background. Warning: Safety relief valve may discharge gas or liquid without prior warning.

Black symbol on yellow background. Warning: Isolate all electrical sources of supply before opening or removing the cover, as lethal voltages may exist.

Black symbol on yellow background. General attention symbol.

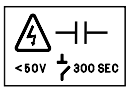

Black symbol on yellow background. Warning: On isolating the supply it may take up to 300 seconds for the capacitor voltage to fall below 50 volts.

© 2025 Johnson Controls. All rights reserved.

Section 2: Product description

YORK YVAA chillers are designed for water or glycol cooling. All units are designed to be located outside on the roof of a building or at ground level.

The units are completely assembled with all interconnecting refrigerant piping and internal wiring, ready for field installation.

Prior to delivery, the unit is pressure tested, evacuated, and fully charged with refrigerant and oil in each of the two independent refrigerant circuits. After assembly, an operational test is performed with water flowing through the evaporator to ensure that each refrigerant circuit operates correctly.

The unit structure is manufactured from heavy gauge, galvanized steel. Many external structural parts are coated with baked-on enamel powder *Champagne* paint color ((RAL 7006), (Munsel No. 9.8YR4.36/1.2)).

All exposed power wiring is routed through liwquid-tight, non-metallic conduit.

General system description

The YVAA Chiller combines the best of modern screw compressor design with the latest technology in variable speed drives. The result is superior control and efficiency in real world conditions. The VSD enables slowing the speed of the compressor to match the load on the system resulting in precise chilled liquid control, minimized sound, maximum energy efficiency, and reduced cost of ownership. The VSD also provides soft starts with no electrical inrush. The lack of heat build-up on start also enables required off time between starts to be reduced to a period of two minutes.

The YVAA Air-Cooled Screw Chiller utilizes many components, which are the same or nearly the same as a standard screw chiller of a similar size. This includes modular frame rails, condenser, fans, compressors, and evaporator.

The chiller consists of two screw compressors in a corresponding number of separate refrigerant circuits, a hybrid falling film evaporator, an air-cooled condenser, receiver/flash tanks, feed valves, oil separators, and compressor mufflers.

Figure 1 - YVAA air-cooled screw liquid chiller with variable speed drive

© 2025 Johnson Controls. All rights reserved.

035-24013-000 REV J

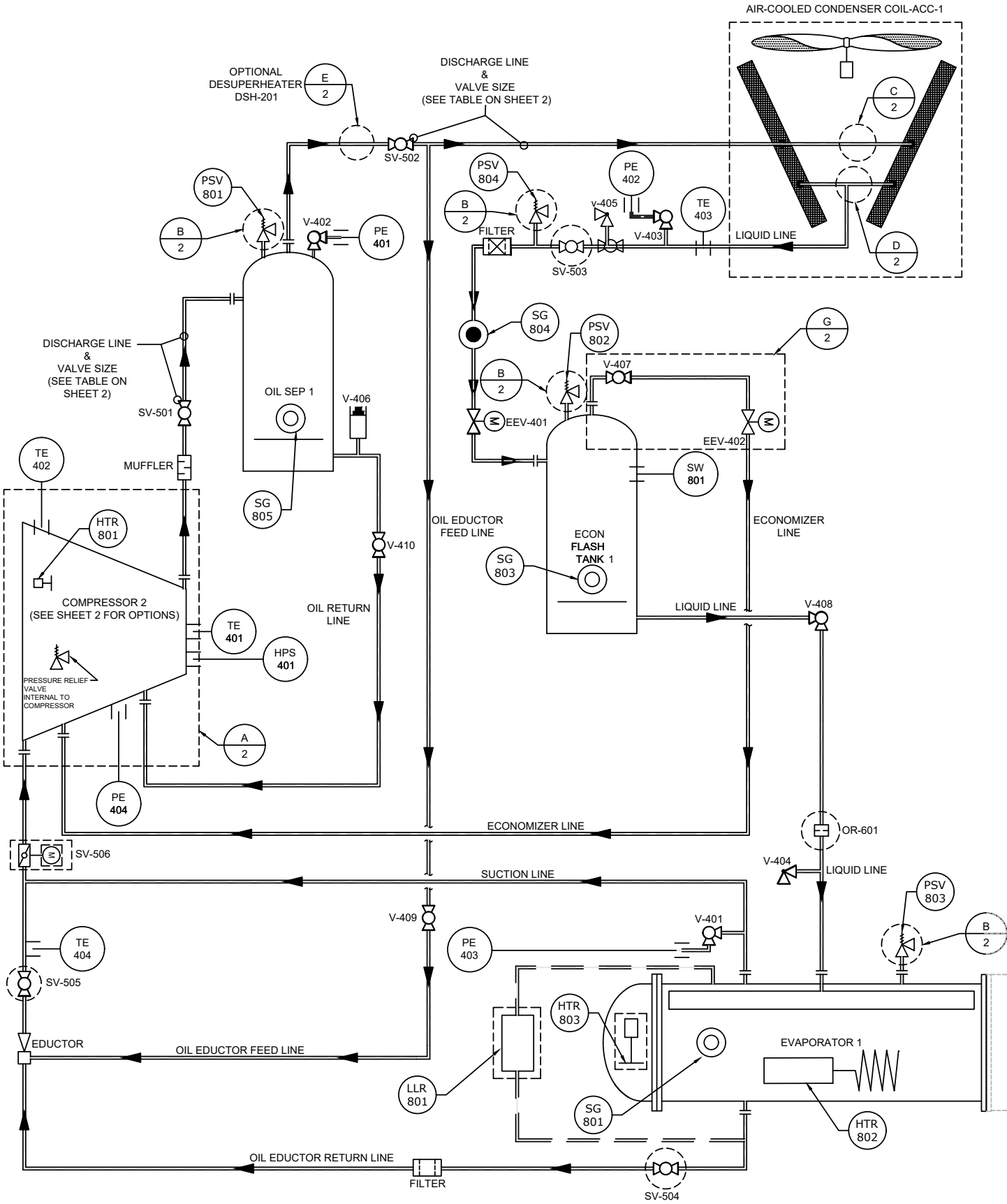

Figure 4 - YVAA Piping and Instrumentation Diagram

© 2025 Johnson Controls. All rights reserved.

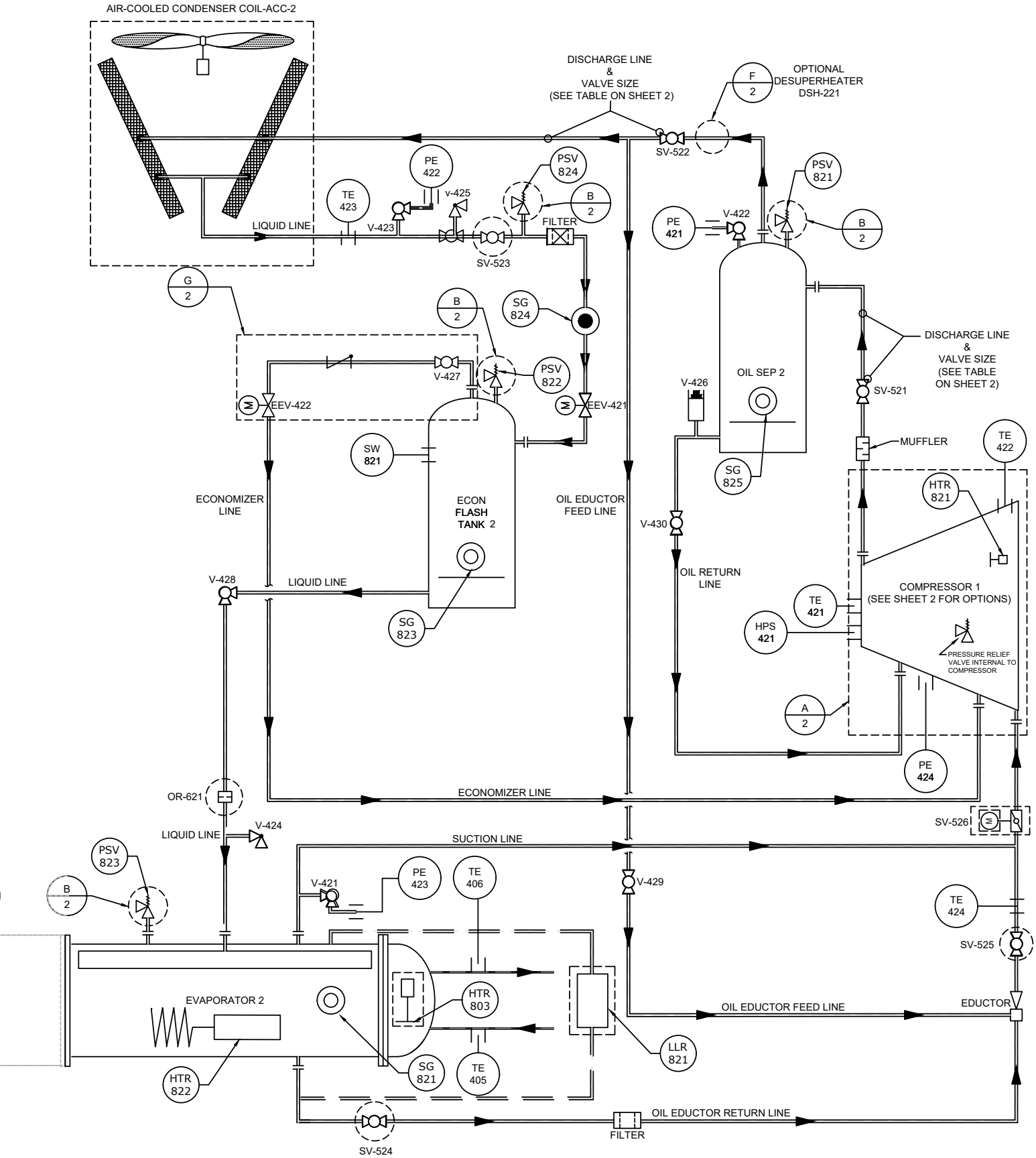

© 2025 Johnson Controls. All rights reserved.

Table 1 - 035-24013-000 YVAA Piping and Instrumentation Legend

Device	Description	System
EEV-401	Condenser 1 drain valve	1
EEV-421	Condenser 2 drain valve	2
EEV-402	Economizer flash tank 1 drain valve	1
EEV-422	Economizer flash tank 2 drain valve	2
HPS-401	Compressor 1 high pressure cut-out switch	1
HPS-421	Compressor 2 high pressure cut-out switch	2
HTR-801	Compressor 1 heater	1
HTR-821	Compressor 2 heater	2
HTR-802	Evaporator 1 heater	1
HTR-822	Evaporator 2 heater	2
HTR-803	Evaporator water box heater	-
OR-601	Evaporator 1 entering orifice	1
OR-621	Evaporator 2 entering orifice	2
PE-401	Oil separator 1 discharge pressure sensor	1
PE-421	Oil separator 2 discharge pressure sensor	2
PE-402	Condenser 1 leaving liquid pressure sensor	1
PE-422	Condenser 2 leaving liquid pressure sensor	2
PE-403	Evaporator 1 pressure sensor	1
PE-423	Evaporator 2 pressure sensor	2
PE-404	Compressor 1 oil pressure sensor	1
PE-424	Compressor 2 oil pressure sensor	2
PSV-801	Oil separator 1 safety valve	1
PSV-821	Oil separator 2 safety valve	2
PSV-802	Economizer flash tank 1 safety valve	1
PSV-822	Economizer flash tank 2 safety valve	2
PSV-803	Evaporator 1 safety valve	1
PSV-823	Evaporator 2 safety valve	2
PSV-804	Liquid line 1 safety valve	1
PSV-824	Liquid line 2 safety valve	2

© 2025 Johnson Controls. All rights reserved.

Table 1 - 035-24013-000 YVAA Piping and Instrumentation Legend (Continued)

Device	Description	System
SG-801	Evaporator 1 Sight Glass	1
SG-821	Evaporator 2 Sight Glass	2
SG-803	Economizer Flash Tank 1 Sight Glass	1
SG-823	Economizer flash tank 2 sight glass	2
SG-804	Economizer flash tank 1 entering liquid sight glass	1
SG-824	Economizer flash tank 2 entering liquid sight glass	2
SG-805	Oil separator 1 sight glass	1
SG-825	Oil separator 2 sight glass	2
SV-501	Compressor 1 discharge service valve	1
SV-521	Compressor 2 discharge service valve	2
SV-502	Condenser 1 inlet service valve	1
SV-522	Condenser 2 inlet service valve	2
SV-503	Liquid line filter / drier 1 service valve	1
SV-523	Liquid line filter / drier 2 service valve	2
SV-504	Eductor filter 1 entering service valve	1
SV-524	Eductor filter 2 entering service valve	2
SV-505	Eductor filter 1 leaving service valve	1
SV-525	Eductor filter 2 leaving service valve	2
SV-506	Compressor 1 entering service valve	1
SV-526	Compressor 2 entering service valve	2
SW-801	Economizer flash tank 1 level switch	1
SW-821	Economizer flash tank 2 level switch	2
TE-401	Compressor 1 discharge temperature sensor	1
TE-421	Compressor 2 discharge temperature sensor	2
TE-402	Compressor 1 motor temperature sensor	1
TE-422	Compressor 2 motor temperature sensor	2
TE-403	Leaving condenser 1 liquid temperature sensor	1
TE-423	Leaving condenser 2 liquid temperature sensor	2
TE-404	Eductor 1 leaving temperature sensor	1
TE-424	Eductor 2 leaving temperature sensor	2
TE-405	Entering evaporator liquid temperature sensor	-
TE-406	Leaving evaporator liquid temperature sensor	-
V-401	Evaporator 1 pressure sensor valve	1
V-421	Evaporator 2 pressure sensor valve	2

© 2025 Johnson Controls. All rights reserved.

Table 1 - 035-24013-000 YVAA Piping and Instrumentation Legend (Continued)

Device	Description	System
V-402	Oil separator 1 pressure sensor valve	1
V-422	Oil separator 2 pressure sensor valve	2
V-403	Condenser 1 leaving liquid pressure sensor	1
V-423	Condenser 2 leaving liquid pressure sensor	2
V-404	Evaporator 1 angle access valve	1
V-424	Evaporator 2 angle access valve	2
V-405	Liquid line 1 angle access valve	1
V-425	Liquid line 2 angle access valve	2
V-406	Oil line 1 schrader access valve	1
V-426	Oil line 2 schrader access valve	2
V-407	Economizer flash tank 1 ball valve	1
V-427	Economizer flash tank 2 ball valve	2
V-408	Economizer flash tank 1 angle valve	1
V-428	Economizer flash tank 2 angle valve	2
V-409	Eductor supply 1 ball valve	1
V-429	Eductor supply 2 ball valve	2
V-410	Oil return line ball valve 1	1
V-430	Oil return line ball valve 2	2
DSH-201	Optional desuperheater 1	1
DSH-221	Optional desuperheater 2	2
LLR-801	Optional liquid level reservoir-1	1
LLR-821	Optional liquid level reservoir-2	2

© 2025 Johnson Controls. All rights reserved.

Table 1 - 035-24013-000 YVAA Piping and Instrumentation Legend (Continued)

Symbol	Description	Symbol	Description
	Check valve		Eductor
	Relief valve		Filter drier
	Change over valve		Liquid filter
	Ball valve		Noise reducer
	Angle valve		Orifice
	Angle ball valve		Flanged connection
	Schrader valve		Desuper heater
S	Solenoid valve		Heater (mat)
	Butterfly valve		Heater (cartridge)
M	Electronic expansion valve		Sensor
M	Electronic motor drive	E 2	Detail # Sheet#
	Sight glass (moisture)		Optional item / Options available
	Sight glass (level)		

© 2025 Johnson Controls. All rights reserved.

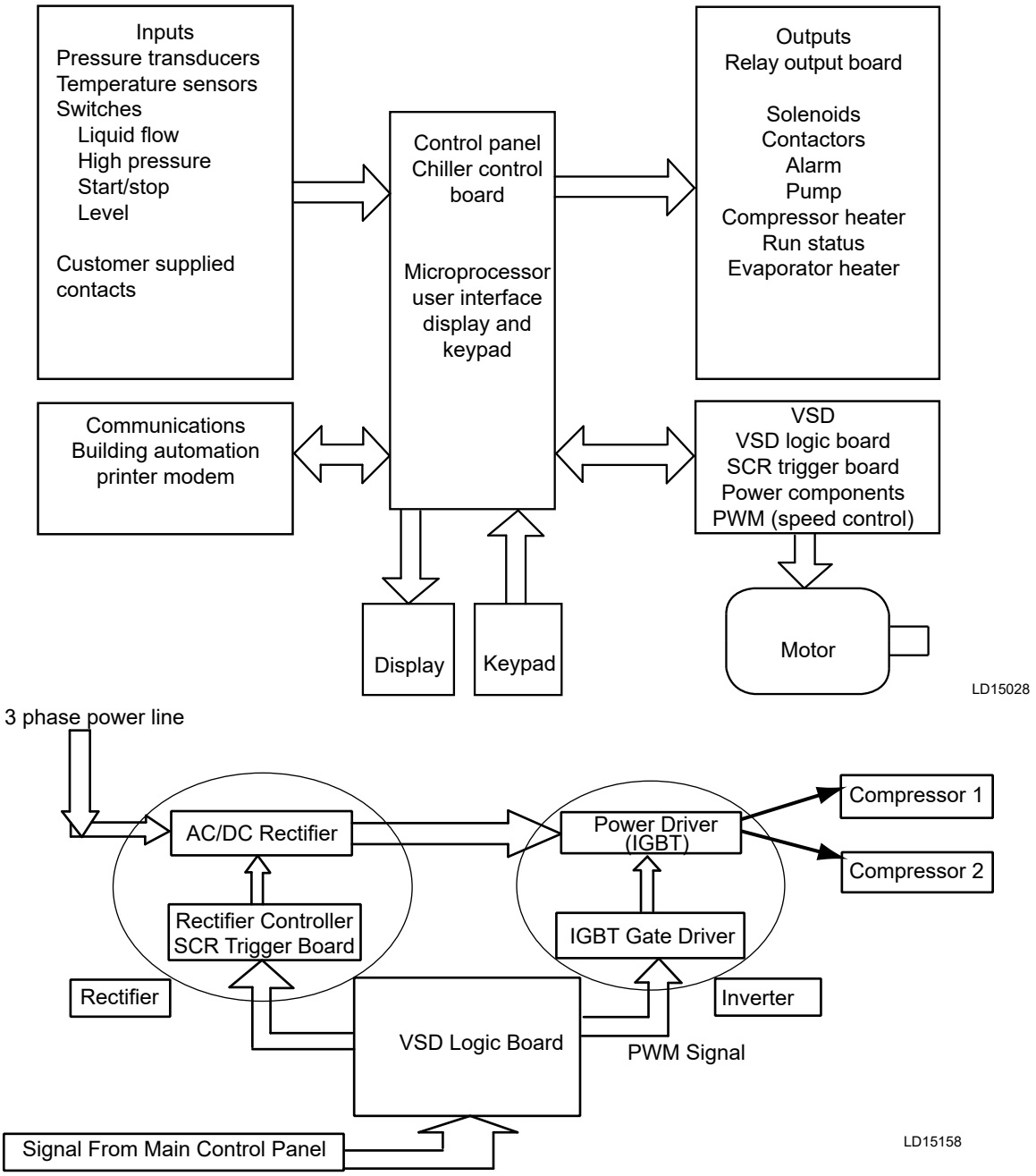

Figure 2 - Chiller control system

Oil separators utilize no moving parts.Oil cooling is accomplished by refrigerant leaving the eductor flashing in the suction line which cools the oil, motor and compressor.

An integral liquid cooled, transistorized, PWM, Variable Speed Drive (VSD) is controlled by the chiller microprocessor control panel to start/stop, select compressors to run, and select compressor speed. Displacement Power Factor is 0. 95 at part or full load.

The chiller microprocessor communicates with the VSD Logic Board using a 3-wire RS-485 opto coupled data link. The VSD Logic Board runs the number of compressors required to meet the load and the compressors to the speed requested by the chiller microprocessor.

The basic system control and VSD system architecture is shown in *Figure 2 on page 24*.

© 2025 Johnson Controls. All rights reserved.

Semi-hermetic YORK twin-screw compressors

Compressors are direct drive, semi-hermetic amd rotary twin-screw type, including: muffler, temperature actuated 'off-cycle' heater, IP55 terminal board and precision machined cast iron housing.

Reliable suction gas cooled, high efficiency, accessible hermetic compressor motor, full suction gas flow through mesh screen filter, with inherent internal thermal overload protection and external current overload on all three phases.

Continuous function, microprocessor controlled, Variable Speed Drive (VSD) must provide valve-less, smooth capacity control from 100% down to 10% of chiller capacity.

In addition, elimination of the slide valve and associated unloading components has resulted in a 50% reduction in compressor moving parts.

Evaporator

The evaporator is a shell and tube, hybrid falling film type heat exchanger. It contains a balance of flooded and falling film technology to optimize efficiency, minimize refrigerant charge, and maintain reliable control. A specifically designed distribution system provides uniform refrigerant flow for optimum performance.

Condenser

The YVAA introduces micro-channel coil to the YORK screw compressor chiller line. The micro-channel maximizes condenser heat transfer, resulting in a smaller footprint, and reduces refrigerant charge by as much as 50%.

Each condenser coil is a single piece all aluminum construction including headers, tubes and fins to avoid galvanic corrosion due to dissimilar metals. Coils and headers are brazed as one piece. Integral subcooling is included. The design working pressure is 375 psig (25.9 barg).

Multiple, standard low sound, high efficiency, TEAO motor driven fans move air through the coils. They are dynamically and statically balanced, direct drive with corrosion-resistant glass fiber reinforced composite blades molded into low-noise, full airfoil cross sections, providing vertical air discharge from extended orifices for efficiency and low sound.

Fan motors are Totally Enclosed Air-Over (TEAO), squirrel-cage type and current protected. The direct drive motors feature double-sealed and permanently lubricated ball bearings, cutting down on maintenance cost over the life of the unit.

Refrigerant circuit

An independent refrigerant circuit is provided per compressor. Each circuit uses copper refrigerant pipe formed on computer controlled bending machines to reduce the number of brazed joints resulting in a reliable and leak resistant system.

- Discharge lines are provided with a manual compressor shutoff service valve See *Accessories and options on Page 27*, for suction line service valve).
- The external oil separators, with no moving parts and designed for minimum oil carry-over, are mounted in the discharge line of the compressor.
- Liquid line components include: high absorption removable core filter-drier, sight glasses with moisture indicators, manual shut-off valve with charging port, orifice and electronic expansion valve.
- An economizer (flash) tank is located in each refrigerant circuit to increase the system efficiency.

Electrical

Johnson Controls has over 25 years of experience designing variable-speed drives specifically for chiller applications. The result is an extremely reliable air-cooled chiller system that offers industry leading efficiency at real world operating conditions, valve-less compressor loading/unloading, excellent capacity control, high power factor and soft start..

Incoming single point power is standard utilizing a lockable circuit breaker, 115 VAC control transformer, VSD, fan contactors, ON/OFF unit switch, microcomputer keypad and display, Chiller Control and VSD Logic boards, and relay boards.

Standard design includes IP55 rating, powder painted steel cabinet with hinged, latched, and gasket sealed outer doors equipped with wind struts for safer servicing. The panel includes a control display access door so that display and control features can be accessed with-

© 2025 Johnson Controls. All rights reserved.

out opening main cabinet doors. All exposed power wiring is routed through liquid-tight, UV-stabilized, non-metallic conduit.

Building automation system capabilities

The E-Link Gateway provides an economical and versatile connection between YORK equipment and open/ standard protocols. It efficiently manages the communication protocols currently used by YORK equipment, exposing the data in a consistent, organized, and defined fashion. The E-Link Gateway is available as a field-installed option on YVAA. A simple switch selection allows configuration of the required equipment profile and output protocol, which reduces equipment connectivity startup time.

Microcomputer control center

The microcomputer control center, see *Figure 3 on page 26*, provides automatic control of chiller operation including compressor start/ stop and load/ unload anti-recycle timers, condenser fans, evaporator pump, evaporator heater, unit alarm contacts and run signal contacts. The microcomputer control center comes online as soon as the main power switch on the unit is switched on; immediately, the microcomputer control center will begin to check all variables with a frequency ranging from 30 seconds to almost continuous monitoring.

The microprocessor controls the unit's capacity by matching the actual leaving chilled water temperature (LCWT) to the user-defined setpoint. Factors that may cause the system's actual LCWT to fluctuate are changes in ambient temperature, loop flow rate, load, and loop volume. The control system reacts to such changes by adjusting the number of compressors that are on and the loading of each compressor in order to keep the LCWT at the setpoint.

The control system logic monitors the rate at which the LCWT is approaching the setpoint to ramp up or down compressor capacity as required.Variable frequency drive allows the compressor capacity to match the load.

Display data

- Leaving Chilled Liquid Temperature
- Returning Liquid Temperature
- Ambient Temperature
- Lead System
- Compressor Capacity (% of Full Load Amps)
- VSD Output Frequency / Compressor Speed
- Compressor Run Hours
- Compressor Number of Starts
- Oil Pressure and Temperature (per Compressor)
- Evaporator Pump Status
- Evaporator Heater Status
- History Data for Last Twenty Normal Shutdowns
- History Data for Last Ten Shutdown Faults

Programmable setpoints

- Chiller On/Off
- Chilled Liquid (Water or Glycol)
- Local or Remote Control
- Units of Measure (Imperial or SI)
- System Lead or Lag
- Remote Temperature Reset
- Remote Current Limit
- Leaving Chilled Liquid Temperature Setpoint and Range

Figure 3 - View of YORK control center user interface

© 2025 Johnson Controls. All rights reserved.

Johnson Controls' systems or another vendor's systems can incorporate these setpoints and data outputs to give the customer a complete understanding of how the system is running through a Building Automation System.

Extreme Conditions – During extreme or unusual conditions (that is, blocked condenser coils, ambient above scheduled maximum, and so on) the chiller control system will avoid shutdown by varying capacity. By monitoring motor current and suction and discharge pressures, the chiller can maintain maximum available cooling output without shutting down.

Unit Safeties are provided for the chiller to perform auto-reset shut down for the following conditions:

- Ambient temperature above or below allowable range
- Out of range leaving chilled liquid temperature
- Under voltage
- Flow switch operation

Accessories and options

All options factory mounted unless otherwise noted.

Sound attenuation

Low Noise Kits – The standard chiller configuration is equipped with low sound fans and acoustic treatments on the refrigerant lines and compressors. There are several sound attenuation options available to further reduce sound at its source thereby meeting local sound level regulations.

SilentNight™ – Due to time of day based sound regulations in some locations it may be desirable to force the chiller to a lower sound level on demand. The SilentNight™ control option provides a control input to limit sound output of the chiller based on time of day. This feature is programmable at the chiller panel or can be controlled remotely using a signal (4 mA to 20 mA or 0 VDC to 10 VDC) from a BAS system.

Fan options

Ultra Quiet Fans – The chiller is equipped with specially designed fans and motors to provide lower sound levels yet retain appropriate airflow. The result is reduced fan generated sound with minimal effect on the chiller capacity or efficiency.

High Static Fans – The chiller is equipped with condenser fans with higher power motors suitable for high external static pressure, up to 100 Pa (0.4 water), across condenser coils. This option should be selected if additional airflow resistance may be present due to flow restrictions such as field installed ducts, filters, sound enclosures and so on. Contact your local Johnson Controls representative for more information.

High Airflow Fans – The chiller is equipped with condenser fans with airfoil type blades and high power motors providing extra airflow across coils. In some chiller configurations, this option can provide an increase in chiller capacity at high ambient. The high airflow fans are also available with variable speed control. Contact your local Johnson Controls representative for more information.

Condenser coils

Fin and tub condenser coils of seamless, internally-enhanced, high-condensing-coefficient, corrosion resistant copper tubes are arranged in staggered rows. The tubes are mechanically expanded into aluminum fins. Integral subcooling is included. The design working pressure of the coils is 375 psig (25.9 barg).

Condenser coil protection

The aluminum alloys used in the YVAA micro-channel condenser have been carefully selected and tested for high corrosion resistance. However, all metals can corrode in harsh conditions. Consider protecting coils from corrosive environments such as coastal, marine, urban and industrial.

Post-Coated Epoxy Dipped Condenser – Micro-channel condenser coils applied with electro-deposited and baked flexible epoxy coating that is finished with a polyurethane UV resistant top-coat suitable for highly corrosive applications.

Protective chiller panels

Wire Panels – UV stabilized black polyvinyl chloride coated, heavy gauge, welded wire mesh guards mounted on the exterior of the full unit. Protects condenser coil faces and prevents unauthorized access to refrigerant components, such as compressors, pipes, evaporators, yet provides free air flow. This can cut installation cost by eliminating the need for separate, expensive fencing.

Louvered Panels – Louvered panels, painted the same color as the unit, enclose the unit to visually screen and protect the coils as well as preventing unauthorized access to internal components. Also available as a

© 2025 Johnson Controls. All rights reserved.

condenser-only option.

Louvered/Wire Panels Combination – Louvered panels, painted the same color as the unit, are mounted on external condenser coil faces. Heavy gauge, welded wire-mesh panels, coated to resist corrosion, are mounted around base of machine to restrict unauthorized access.

End Hail Guard – Louvered panels, painted with the same color as the unit, are installed on the rear of the unit, the opposite end of the control panel, to protect the exposed condenser from flying debris or hail.

V-Guard Panels – Solid panels, painted the same color as the unit, are installed along the sides of the units to cover exposed piping within the condenser section without impacting airflow. These guard panels can be combined with End Hail Guard option for additional protection from debris.

Evaporator options

38 mm insulation – Double thickness insulation provided.

Flange Kit – Provides contractor with the couplings best suited to tie into the chilled water piping. All flanges are PN10.

Connection Location – The standard unit configuration is available with fluid inlet connections at the rear, the opposite control panel end, of unit. Option available for front fluid inlet on select configurations.

Water Box Heater – Unless an appropriate freeze protection fluid is used in the chilled fluid circuit, optional water box heaters are required if the chiller is exposed to environments that reach ambient temperatures below 0ºF (-17.8ºC). When the water box heaters are operated along with other required freeze protection protocols, they assist in protecting the evaporator from freeze damage in ambient temperatures down to -20ºF (-28ºC). A separate, customer supplied 120 V/60 Hz or 230 V/50 Hz single phase power supply is required to provide power to the water box heaters. In order to control the operation of the water box heaters, continuous power must be provided to the chiller control panel. See the *Application Data* section for the requirements for protection against freeze damage.

Controls Options

High Ambient Operation – This provides special control logic coupled with high airflow fans to permit high ambient up to 52°C (125°F) operation. Fans are airfoil type blades with high power motors. This option may also allow for increased machine capacity, allowing the selection of a smaller chassis to meet specific capacity requirements.

Building Automation System Interface (Temperature) – Factory installed option to accept a 4 mA to 20 mA or a 0 VDC to 10 VDC input to allow remote reset of the Leaving Chilled Liquid Temperature Setpoint. The setpoint can be positively offset upwards up to 22.2°C (40°F). This option is useful for ice storage or process applications or for periods where higher chilled liquid temperatures are adequate for low loads. Available alone or in combination with BAS Load Limit.

Building Automation System Interface (Load Limit) – Factory installed option to accept a 4 mA to 20 mA or a 0 VDC to 10 VDC input to allow remote reset of the Load Limit Setpoint. The setpoint can limit system demand from 30% to 100%. Available alone or in combination with BAS Temperature Reset.

E-Link – The optional E-Link gateway provides communication between the equipment and Building Automation Systems, including BACnet (MS/TP), Modbus, LON, and N2.

Thermal Storage – Provides special control logic and modifications to produce leaving chilled brine temperatures below 4.4°C (40°F) primarily at times of low ambient temperatures (night time). Option can be used to produce ice to supplement cooling and significantly decrease energy costs. The capability of the chiller is enhanced by using both ice and chilled water simultaneously during times of peak cooling needs.

General options

Flow Switch Accessory – Vapor proof SPDT, NEMA 3R switch, 10.3 barg (150 psig) DWP, -29°C to 121°C (-20°F to 250°F) with 1 in. NPT (IPS) connection for upright mounting in horizontal pipe. This flow switch or equivalent must be furnished with each unit. **Field mounted.**

Differential Pressure Switch – This 0.2 barg to 3 barg (3 psig to 45 psig) range switch, with 1/4 in. NPTE

© 2025 Johnson Controls. All rights reserved.

pressure connections, is an alternative to the paddle-type flow switch. **Field mounted.**

Thermal Dispersion Flow Switch – Alternative to the paddle-type flow switch and differential pressure switch, this electronic flow switch requires 115 VAC 50 Hz or 60 Hz power supply. **Field mounted.**

Service Isolation Valve – Service suction isolation valve added to unit for each refrigerant circuit.

Dual Pressure Relief Valve – Two safety relief valves are mounted in parallel; one is always operational to assist in valve replacement during maintenance.

Terminal Block [not available for CE marked units] Terminal Block connections must be provided at the point of incoming single point connection for field connection and interconnecting wiring to the compressors. Separate external protection must be supplied, by others, in the incoming power wiring, which must comply with local codes.

Circuit Breaker – A unit-mounted circuit breaker with external lockable handle will be supplied to isolate the single point power voltage for servicing. The circuit breaker is sized to provide motor branch circuit protection, short circuit protection and ground fault protection for the motor branch-circuit conductors, the motor control apparatus and the motors.

Non-Fused Disconnect Switch – Unit-mounted disconnect switch with external lockable handle can be supplied to isolate the unit power voltage for servicing. Separate external fusing must be supplied by the power wiring, which must comply with local codes.

Vibration isolation

Elastomeric Isolation – This option is recommended for normal installations. It provides very good performance in most applications for the least cost. **Field mounted.**

25 mm (1 in.) Spring Isolators – Spring and cage type isolators for mounting under the unit base rails are available to support unit. They are level adjustable. 25 mm (1 in.) nominal deflection may vary slightly by application. **Field mounted.**

50 mm (2 in.) Restrained Spring Isolators – Restrained Spring-Flex Mounting isolators incorporate a rugged welded steel housing with vertical and horizontal limit stops. Housings designed to withstand a minimum 1.0g accelerated force in all directions up to 51 mm (2 in.). The deflection may vary slightly by application. They are level adjustable. **Field mounted.**

© 2025 Johnson Controls. All rights reserved.

This page is intentionally left blank.

© 2025 Johnson Controls. All rights reserved.

Section 3: Rigging, handling, and storage

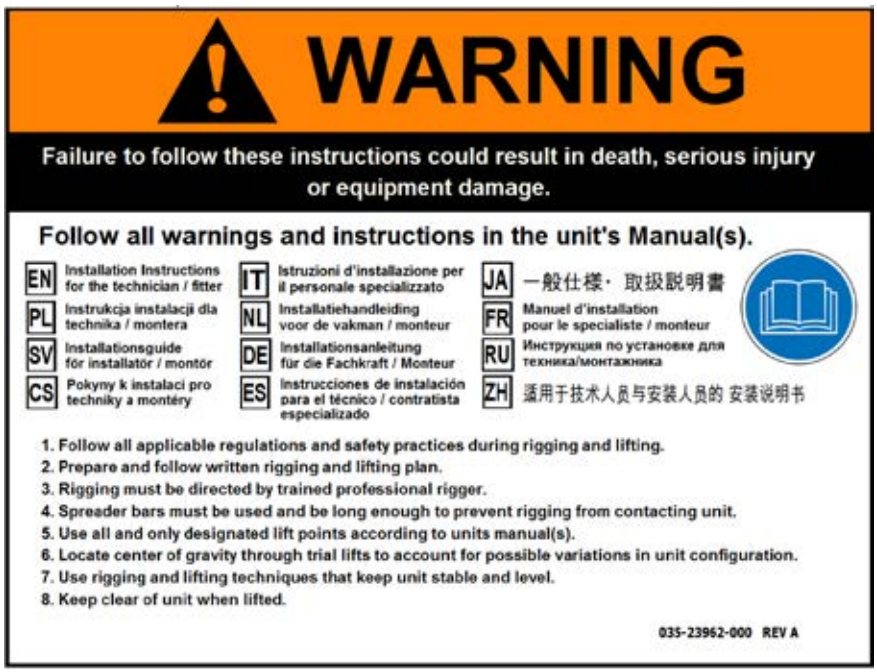

LD19197

DANGER

Rigging and lifting should only be done by a professional rigger in accordance with a written rigging and lifting plan. The most appropriate rigging and lifting method will depend on job specific factors, such as the rigging equipment available and site needs. Therefore, a professional rigger must determine the rigging and lifting method to be used, and it is beyond the scope of this manual to specify rigging and lifting details.

Lifting weights

Refer to the unit nameplate for unit shipping weight. Note that weight may vary depending on unit configuration at the time of lifting. See *Table 5 on page 60* or *Table 6 on page 77* for further information regarding shipping and operating weights.

Delivery and storage

To ensure consistent quality and maximum reliability, all units are tested and inspected before leaving the factory. Units are shipped completely assembled and containing refrigerant under pressure. Units are shipped without export crating unless crating has been specified on the Sales Order.

If the unit is to be put into storage, before installation, the following precautions should be observed:

- The chiller must be “blocked” so that the base is not permitted to sag or bow.
- Ensure that all openings, such as water connections, are securely capped.
- Do not store where exposed to high ambient air temperatures that may exceed relief valve settings. Refer to *Long-Term Storage Requirement - Field Preparation (Form 50.20-NM7)*.
- The condensers should be covered to protect the coils and fins from potential damage and corrosion, particularly where building work is in progress.
- The unit should be stored in a location where there is minimal activity in order to limit the risk of accidental physical damage.
- To prevent inadvertent operation of the pressure relief devices the unit must not be steam cleaned.
- It is recommended that the unit is periodically inspected during storage.

© 2025 Johnson Controls. All rights reserved.

Inspection

Remove any transit packing and inspect the unit to ensure that all components have been delivered and that no damage has occurred during transit. If any damage is evident, it should be noted on the carrier's freight bill and a claim entered in accordance with the instructions given on the advice note.

\Major damage must be reported immediately to your local Johnson Controls representative.

Moving the chiller

Before moving the unit, ensure that the installation site is suitable for installing the unit and is easily capable of supporting the weight of the unit and all associated services.

WARNING

The unit must only be lifted by the base frame at the points provided. Never move the unit on rollers, or lift the unit using a forklift truck.

Care must be taken to avoid damaging the condenser cooling fins when moving the unit.

Unit removal from shipping container

1. Place a clevis pin into the holes provided at the end of each base rail on the unit. Attach chains or nylon straps through the clevis pins and hook onto a suitable lift truck for pulling the unit out of the container.
2. Slowly place tension on the chains or straps until the unit begins to move and then slowly pull the unit from the container. Be sure to pull straight so the sides do not scrape the container.
3. Place a lifting fixture on the forks of the lift truck and reattach the chain or strap. Slightly lift the front of the unit to remove some weight from the floor of the container. Continue pulling the unit with an operator on each side to guide the lift truck operator.
4. Pull the unit until the lifting locations are outside of the container. Place 4 x 4 blocks of wood under the base rails of the unit. Gently rest the unit on the blocks and remove the chains and lift truck.
5. Attach lifting rigging from the crane and slowly complete the removal from the container then lift up and away.

LDxxxxxx

Figure 5 - Lifting lug

Lifting using lugs

Units are provided with lifting holes in the base frame which accept the accessory lifting lug set as shown in *Figure 5*. The lugs (RH and LH) should be inserted into the respective holes in the base frame and turned so that the spring loaded pin engages into the hole and the flanges on the lug lock behind the hole. The lugs should be attached to the cables/chains using shackles or safety hooks.

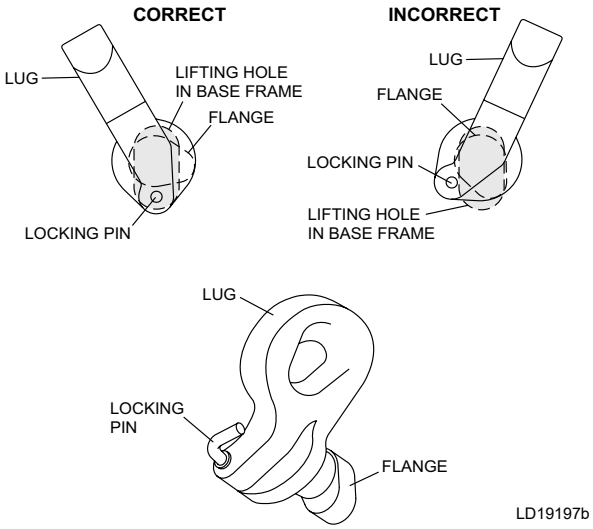

Figure 6 - Lifting using lugs

Lifting using shackles

The shackles should be inserted into the respective holes in the base frame and secured from the inside.

- Use spreader bars to avoid lifting chains hitting the chiller. Various methods of spreader bar arrangements may be used, keeping in mind the intent is to keep the unit stable and to keep the chains from hitting the chiller and causing damage.
- Never lift the chiller using a forklift or by hooking to the top rails. Use only the lifting holes provided.
- Lifting Instructions are placed on a label on the chiller and on the shipping bag.

© 2025 Johnson Controls. All rights reserved.

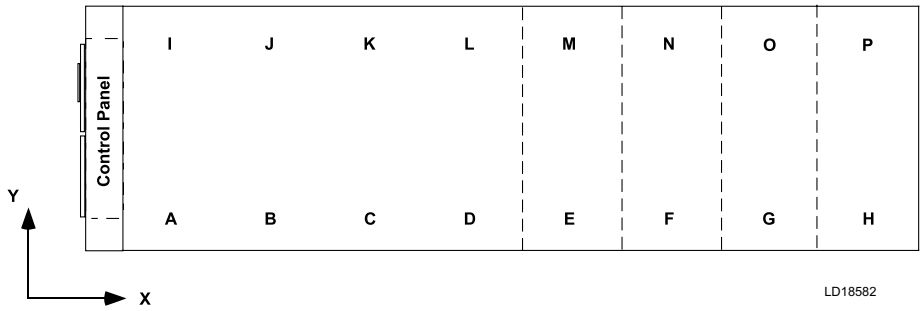

Table 2 - Unit rigging

YVAA model			Description	Units	Rigging holes							
Frame	Cond	Evap			A	B	C	D	E	F	G	H
015	3	B	Rigging hole location	in.	18	60	116	192				
				mm	457	1,524	2,946	4,877				
016	5	B	Rigging hole location	in.	18	60	137	214				
				mm	457	1,524	3,480	5,435				
017	8	C	Rigging hole location	in.	12	73	144	197	260			
				mm	305	1,854	3,658	5,004	6,604			
018	3	A	Rigging hole location	in.	18	60	143	220				
				mm	457	1,524	3,632	5,588				
019	5	A	Rigging hole location	in.	18	60	143	227	272			
				mm	457	1,524	3,632	5,766	6,909			
019	8	B	Rigging hole location	in.	18	60	137	215	302			
				mm	457	1,524	3,480	5,461	7,671			
020	0	C	Rigging hole location	in.	18	60	131	214				
				mm	457	1,518	3,327	5,436				
021	3	A	Rigging hole location	in.	18	60	143	227	272			
				mm	457	1,524	3,632	5,769	6,909			
021	5	C	Rigging hole location	in.	12	73	144	197	260			
				mm	305	1,854	3,658	5,004	6,604			
021	8	C	Rigging hole location	in.	12	73	163	254	324			
				mm	305	1,854	4,140	6,452	8,230			

Note: Rigging and lifting the unit must be done safely by a professional rigger as discussed in this section. The rigger should locate the center of gravity through trial lifts to account for possible variations in unit configuration. Contact your nearest Johnson Controls Sales Office for weight data.

© 2025 Johnson Controls. All rights reserved.

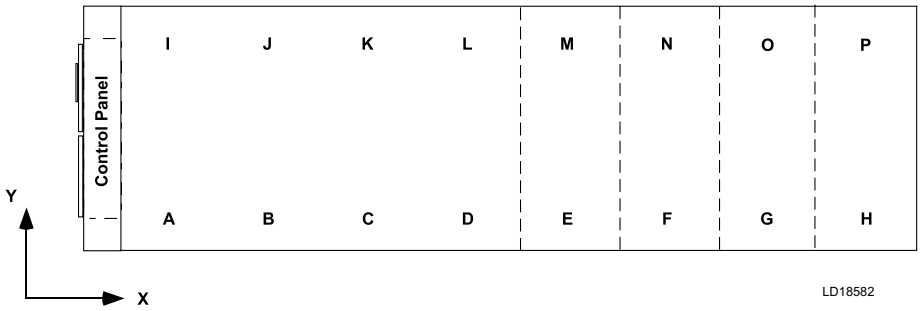

Table 1 - Unit rigging (cont'd)

YVAA model			Description	Units	Rigging holes							
Frame	Cond	Evap			I	J	K	L	M	N	O	P
015	3	B	Rigging hole location	in.	18	60	116	192				
				mm	457	1,524	2,946	4,877				
016	5	B	Rigging hole location	in.	18	60	137	214				
				mm	457	1,524	3,480	5,435				
017	8	C	Rigging hole location	in.	12	73	144	197	260			
				mm	305	1,854	3,658	5,004	6,604			
018	3	A	Rigging hole location	in.	18	60	143	220				
				mm	457	1,524	3,632	5,588				
019	5	A	Rigging hole location	in.	18	60	143	227	272			
				mm	457	1,524	3,632	5,766	6,909			
019	8	B	Rigging hole location	in.	18	60	137	215	302			
				mm	457	1,524	3,480	5,461	7,671			
020	0	C	Rigging hole location	in.	18	60	131	214				
				mm	457	1,518	3,327	5,436				
021	3	A	Rigging hole location	in.	18	60	143	227	272			
				mm	457	1,524	3,632	5,769	6,909			
021	5	C	Rigging hole location	in.	12	73	144	197	260			
				mm	305	1,854	3,658	5,004	6,604			
021	8	C	Rigging hole location	in.	12	73	163	254	324			
				mm	305	1,854	4,140	6,452	8,230			

Note: Rigging and lifting the unit must be done safely by a professional rigger as discussed in this section. The rigger should locate the center of gravity through trial lifts to account for possible variations in unit configuration. Contact your nearest Johnson Controls Sales Office for weight data.

© 2025 Johnson Controls. All rights reserved.

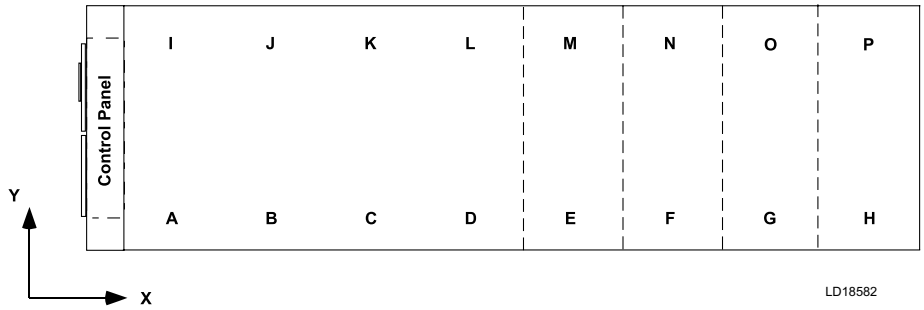

Table 1 - Unit rigging (cont'd)

YVAA model			Description	Units	Rigging holes							
Frame	Cond	Evap			A	B	C	D	E	F	G	H
023	3	B	Rigging hole location	in.	18	60	137	215	272			
				mm	457	1,524	3,480	5,461	6,909			
024	5	C	Rigging hole location	in.	18	60	149	240	324			
				mm	457	1,524	3,785	6,096	8,230			
024	8	C	Rigging hole location	in.	12	73	163	254	347			
				mm	305	1,854	4,140	6,452	8,814			
026	3	B	Rigging hole location	in.	18	60	137	215	302			
				mm	457	1,524	3,480	5,461	7,671			
027	3	D	Rigging hole location	in.	12	73	121	181	264	324		
				mm	305	1,854	3,073	4,597	6,706	8,230		
027	5	E	Rigging hole location	in.	12	73	121	181	264	324		
				mm	305	1,854	3,073	4,597	6,706	8,230		
027	8	E	Rigging hole location	in.	12	73	121	181	243	347		
				mm	305	1,854	3,073	4,597	6,172	8,814		
029	5	E	Rigging hole location	in.	12	73	179	290	347			
				mm	305	1,854	4,547	7,366	8,814			
030	3	C	Rigging hole location	in.	12	73	161	254	347			
				mm	305	1,854	4,089	6,452	8,814			

Note: Rigging and lifting the unit must be done safely by a professional rigger as discussed in this section. The rigger should locate the center of gravity through trial lifts to account for possible variations in unit configuration. Contact your nearest Johnson Controls Sales Office for weight data.

© 2025 Johnson Controls. All rights reserved.

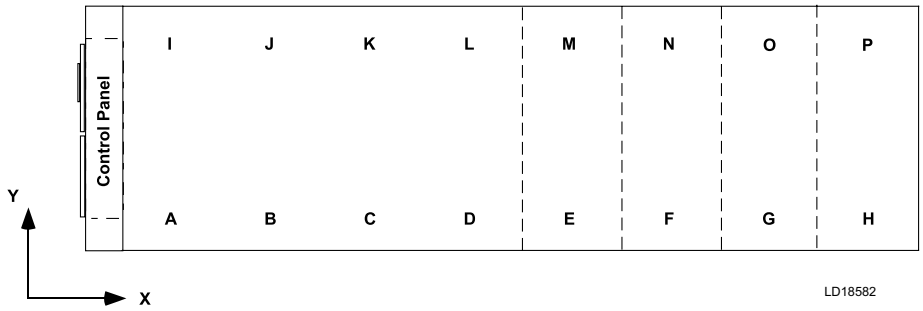

Table 1 - Unit rigging (cont'd)

YVAA model			Description	Units	Rigging holes							
Frame	Cond	Evap			I	J	K	L	M	N	O	P
023	3	B	Rigging hole location	in.	18	60	137	215	272			
				mm	457	1,524	3,480	5,461	6,909			
024	5	C	Rigging hole location	in.	18	60	149	240	324			
				mm	457	1,524	3,785	6,096	8,230			
024	8	C	Rigging hole location	in.	12	73	163	254	347			
				mm	305	1,854	4,140	6,452	8,814			
026	3	B	Rigging hole location	in.	18	60	137	215	302			
				mm	457	1,524	3,480	5,461	7,671			
027	3	D	Rigging hole location	in.	12	73	121	181	264	324		
				mm	305	1,854	3,073	4,597	6,706	8,230		
027	5	E	Rigging hole location	in.	12	73	121	181	264	324		
				mm	305	1,854	3,073	4,597	6,706	8,230		
027	8	E	Rigging hole location	in.	12	73	121	181	243	347		
				mm	305	1,854	3,073	4,597	6,172	8,814		
029	5	E	Rigging hole location	in.	12	73	179	290	347			
				mm	305	1,854	4,547	7,366	8,814			
030	3	C	Rigging hole location	in.	12	73	161	254	347			
				mm	305	1,854	4,089	6,452	8,814			

Note: Rigging and lifting the unit must be done safely by a professional rigger as discussed in this section. The rigger should locate the center of gravity through trial lifts to account for possible variations in unit configuration. Contact your nearest Johnson Controls Sales Office for weight data.

© 2025 Johnson Controls. All rights reserved.

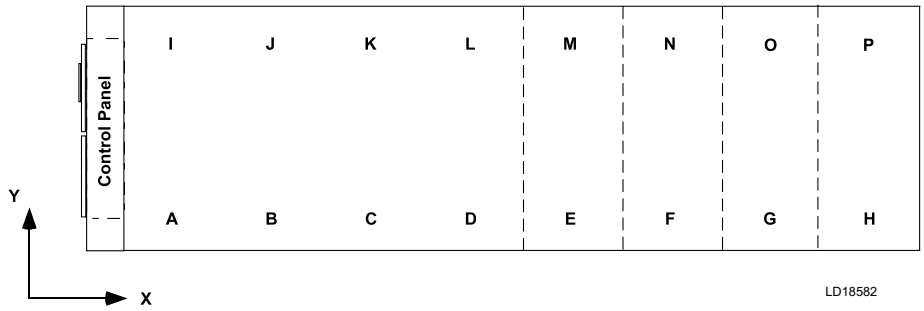

Table 1 - Unit rigging (cont'd)

YVAA model			Description	Units	rigging holes							
Frame	Cond	Evap			A	B	C	D	E	F	G	H
030	5	C	Rigging hole location	in.	12	73	161	254	306	391		
				mm	305	1,854	4,089	6,452	7,772	9,931		
030	8	E	Rigging hole location	in.	12	73	121	179	243	296	391	
				mm	305	1,854	3,073	4,547	6,172	7,518	9,931	
031	8	E	Rigging hole location	in.	12	73	121	179	243	353	435	
				mm	305	1,854	3,073	4,547	6,172	8,966	11,049	
032	3	E	Rigging hole location	in.	12	73	121	181	243	347		
				mm	305	1,854	3,073	4,597	6,172	8,814		
033	3	C	Rigging hole location	in.	12	73	163	254	306	391		
				mm	305	1,854	4,140	6,452	7,772	9,931		
034	3	E	Rigging hole location	in.	12	73	121	181	243	296	391	
				mm	305	1,854	3,073	4,597	6,172	7,518	9,931	
034	5	E	Rigging hole location	in.	12	73	121	181	243	353	435	
				mm	305	1,854	3,073	4,597	6,172	8,966	11,049	
036	8	J	Rigging hole location	in.	12	73	181	238	302	392	434	501
				mm	305	1,854	4,597	6,045	7,671	9,957	11,024	12,725
037	3	F	Rigging hole location	in.	12	73	181	238	302	435		
				mm	305	1,854	4,597	6,045	7,671	11,049		
037	5	I	Rigging hole location	in.	12	73	181	238	302	435		
				mm	305	1,854	4,597	6,045	7,671	11,049		

Note: Rigging and lifting the unit must be done safely by a professional rigger as discussed in this section. The rigger should locate the center of gravity through trial lifts to account for possible variations in unit configuration. Contact your nearest Johnson Controls Sales Office for weight data.

© 2025 Johnson Controls. All rights reserved.

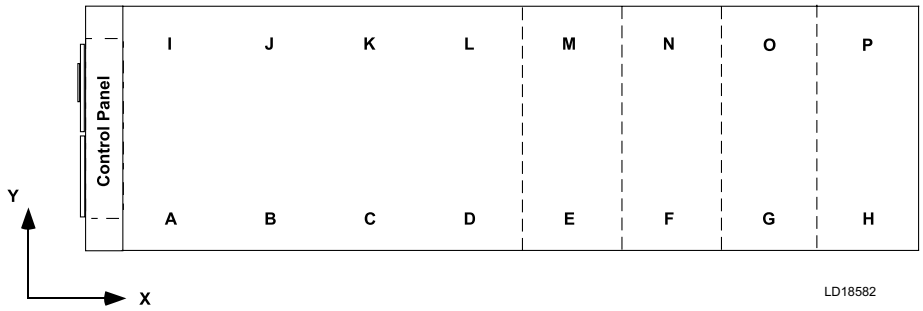

Table 1 - Unit rigging (cont'd)

YVAA model			Description	Units	rigging holes							
Frame	Cond	Evap			I	J	K	L	M	N	O	P
030	5	C	Rigging hole location	in.	12	73	161	254	306	391		
				mm	305	1,854	4,089	6,452	7,772	9,931		
030	8	E	Rigging hole location	in.	12	73	121	179	243	296	391	
				mm	305	1,854	3,073	4,547	6,172	7,518	9,931	
031	8	E	Rigging hole location	in.	12	73	121	179	243	353	435	
				mm	305	1,854	3,073	4,547	6,172	8,966	11,049	
032	3	E	Rigging hole location	in.	12	73	121	181	243	347		
				mm	305	1,854	3,073	4,597	6,172	8,814		
033	3	C	Rigging hole location	in.	12	73	163	254	306	391		
				mm	305	1,854	4,140	6,452	7,772	9,931		
034	3	E	Rigging hole location	in.	12	73	121	181	243	296	391	
				mm	305	1,854	3,073	4,597	6,172	7,518	9,931	
034	5	E	Rigging hole location	in.	12	73	121	181	243	353	435	
				mm	305	1,854	3,073	4,597	6,172	8,966	11,049	
036	8	J	Rigging hole location	in.	12	73	181	238	302	392	434	501
				mm	305	1,854	4,597	6,045	7,671	9,957	11,024	12,725
037	3	F	Rigging hole location	in.	12	73	181	238	302	435		
				mm	305	1,854	4,597	6,045	7,671	11,049		
037	5	I	Rigging hole location	in.	12	73	181	238	302	435		
				mm	305	1,854	4,597	6,045	7,671	11,049		

Note: Rigging and lifting the unit must be done safely by a professional rigger as discussed in this section. The rigger should locate the center of gravity through trial lifts to account for possible variations in unit configuration. Contact your nearest Johnson Controls Sales Office for weight data.

© 2025 Johnson Controls. All rights reserved.

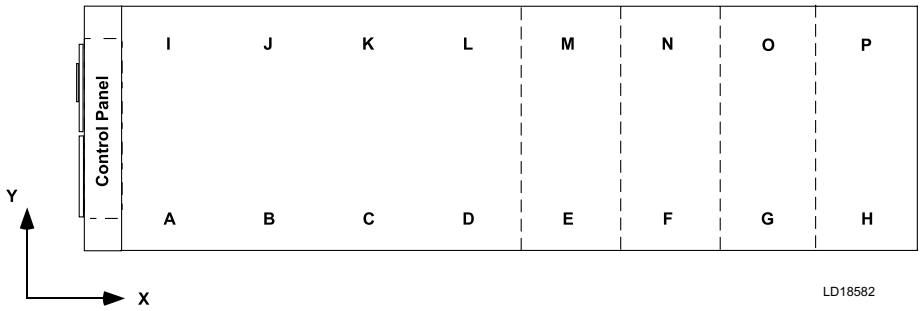

Table 1 - Unit rigging (cont'd)

YVAA model			Description	Units	rigging holes							
Frame	Cond	Evap			A	B	C	D	E	F	G	H
039	8	J	Rigging hole location	in.	12	73	181	238	302	435	478	545
				mm	305	1,854	4,597	6,045	7,671	11,049	12,141	13,843
041	3	H	Rigging hole location	in.	12	73	181	238	302	435		
				mm	305	1,854	4,597	6,045	7,671	11,049		
042	5	H	Rigging hole location	in.	12	73	181	238	302	435	478	545
				mm	305	1,854	4,597	6,045	7,671	11,049	12,141	13,843
042	8	J	Rigging hole location	in.	12	73	181	238	302	435	494	572
				mm	305	1,854	4,597	6,045	7,671	11,049	12,548	14,529
044	3	G	Rigging hole location	in.	12	73	181	238	290	435	478	545
				mm	305	1,854	4,597	6,045	7,366	11,049	12,141	13,843
047	5	J	Rigging hole location	in.	12	73	181	238	290	435	494	572
				mm	305	1,854	4,597	6,045	7,366	11,049	12,548	14,529
048	3	G	Rigging hole location	in.	12	73	181	238	290	435	494	572
				mm	305	1,854	4,597	6,045	7,366	11,049	12,548	14,529
049	0	K	Rigging hole location	in.	12	73	181	238	290	435		
				mm	305	1,854	4,597	6,045	7,366	11,049		
050	0	J	Rigging hole location	in.	12	73	181	238	290	435		572
				mm	305	1,854	4,597	6,045	7,366	11,049		14,529
052	3	J	Rigging hole location	in.	12	73	181	238	290	435	494	572
				mm	305	1,854	4,597	6,045	7,366	11,049	12,548	14,529

Note: Rigging and lifting the unit must be done safely by a professional rigger as discussed in this section. The rigger should locate the center of gravity through trial lifts to account for possible variations in unit configuration. Contact your nearest Johnson Controls Sales Office for weight data.

© 2025 Johnson Controls. All rights reserved.

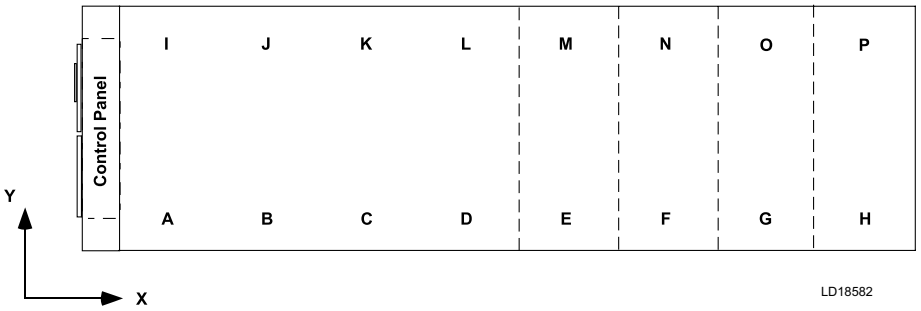

Table 1 - Unit rigging (cont'd)

YVAA model			Description	Units	rigging holes							
Frame	Cond	Evap			I	J	K	L	M	N	O	P
039	8	J	Rigging hole location	in.	12	73	181	238	302	435	478	545
				mm	305	1,854	4,597	6,045	7,671	11,049	12,141	13,843
041	3	H	Rigging hole location	in.	12	73	181	238	302	435		
				mm	305	1,854	4,597	6,045	7,671	11,049		
042	5	H	Rigging hole location	in.	12	73	181	238	302	435	478	545
				mm	305	1,854	4,597	6,045	7,671	11,049	12,141	13,843
042	8	J	Rigging hole location	in.	12	73	181	238	302	435	494	572
				mm	305	1,854	4,597	6,045	7,671	11,049	12,548	14,529
044	3	G	Rigging hole location	in.	12	73	181	238	290	435	478	545
				mm	305	1,854	4,597	6,045	7,366	11,049	12,141	13,843
047	5	J	Rigging hole location	in.	12	73	181	238	290	435	494	572
				mm	305	1,854	4,597	6,045	7,366	11,049	12,548	14,529
048	3	G	Rigging hole location	in.	12	73	181	238	290	435		
				mm	305	1,854	4,597	6,045	7,366	11,049		
049	0	K	Rigging hole location	in.	12	73	181	238	290	435		
				mm	305	1,854	4,597	6,045	7,366	11,049		
050	0	J	Rigging hole location	in.	12	73	181	238	290	435		
				mm	305	1,854	4,597	6,045	7,366	11,049		
052	3	J	Rigging hole location	in.	12	73	181	238	290	435	494	572
				mm	305	1,854	4,597	6,045	7,366	11,049	12548	14,529

Note: Rigging and lifting the unit must be done safely by a professional rigger as discussed in this section. The rigger should locate the center of gravity through trial lifts to account for possible variations in unit configuration. Contact your nearest Johnson Controls Sales Office for weight data.

© 2025 Johnson Controls. All rights reserved.

Section 4: Installation

Location requirements

For optimum performance and trouble-free service, it is essential that the installation site meet the location and space requirements for the model being installed.

Locate the chiller control panel in a physically secured area with access only to authorized personnel. To further tighten security, ensure that the control panel is mechanically locked. Remove the keys to the control panel and store them in a secure location.

It is important to ensure that the minimum service access space is maintained for cleaning and maintenance purposes.

Outdoor installations

The units are designed for outdoor installation and can be installed at ground level on a suitable flat level foundation easily capable of supporting the weight of the unit, or on a suitable rooftop location. In both cases an adequate supply of air is required. Avoid locations where the sound output and air discharge from the unit may be objectionable.

The location should be selected for minimum sun exposure and away from boiler flues and other sources of airborne chemicals that could attack the condenser coils and steel parts of the unit.

If located in an area accessible to unauthorized persons, steps must be taken to prevent access to the unit by means of a protective fence. This will help to prevent the possibility of vandalism, accidental damage, or possible harm caused by unauthorized removal of protective guards or opening panels to expose rotating or high voltage components.

For ground level locations, the unit must be installed on a suitable flat and level concrete base that extends to fully support the two side channels of the unit base frame. A one-piece concrete slab, with footings extending below the frost line is recommended. To avoid noise and vibration transmission, the unit should not be secured to the building foundation.

On rooftop locations, choose a place with adequate structural strength to safely support the entire operating weight of the unit and service personnel. The unit can be mounted on a concrete slab, similar to ground floor locations, or on steel channels of suitable strength. The channels should be spaced with the same centers as the unit side and front base rails. This will allow vibration isolators to be fitted if required. Isolators are recommended for rooftop locations.

Mounting holes (5/8 in.) are provided in the base rails for bolting the unit to its foundation. See *Table 10 on page 93* for location of the mounting holes.

Any ductwork or attenuators fitted to the unit must not have a total static pressure resistance, at full unit airflow, exceeding the capability of the fans installed in the unit.

The condenser fans are propeller-type and are not recommended for use with ductwork, filters or other impediments to airflow in the condenser air stream.

When it is desirable to surround the units in addition to the optional louver package selected, it is recommended that the screening passes the required chiller CFM without exceeding 0.1 w.g. (24.9084 Pa) external static pressure.

Protection against corrosive environments is available by ordering the units with cured epoxy-coating on the microchannel condenser coil. Epoxy-coated coils should be used with any units being installed at the seashore where salt spray/mist may hit the units, or where acid rain is prevalent.

On installations where winter operation is intended and snow accumulations are expected, additional elevation must be provided to ensure normal condenser air flow.

Avoid locations near windows or structures where normal operating sounds may be objectionable.

Location clearances

Adequate clearances around the units are required for the unrestricted airflow for the air-cooled condenser coils and to prevent re-circulation of warm discharge air back onto the coils. If clearances given are not maintained, airflow restriction or re-circulation will cause a loss of unit performance, an increase in power consumption, and may cause the unit to malfunction. Consideration should also be given to the possibility of down drafts, caused by adjacent buildings, which may cause re-circulation or uneven unit airflow.

For locations where significant cross winds are expected, such as exposed roof tops, an enclosure of solid or louver type is recommended to prevent wind turbulence interfering with the unit airflow.

When units are installed in an enclosure, the enclosure height should not exceed the height of the unit on more than one side. If the enclosure is of louvered construction, the same requirement of static pressure loss applies as for ducts and attenuators stated above.

© 2025 Johnson Controls. All rights reserved.

Recommended minimum clearances

Recommended clearances for the YVAA units are:

- Side to wall – 6 ft (1.8 m)
- Rear to wall – 6 ft (1.8 m)
- Control panel end to wall – 4 ft (1.2 m)
- Top – no obstructions whatsoever
- Distance between adjacent units – 10 ft (3 m)

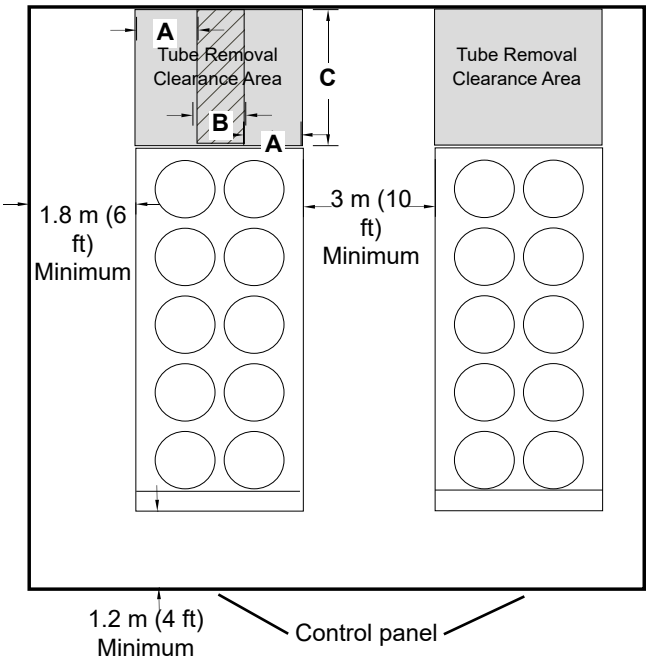

Figure 7 - Acceptable minimum clearances around and between units

Clearance dimensions provided in** Figure 7 on page 42 and Table 3 on page 42* ***are necessary to maintain good airflow and ensure correct unit operation. It is also necessary to consider access requirements for safe operation and maintenance of the unit and power and control panels. Local health and safety regulations, or practical considerations for service replacement of large components, may require larger clearances than those recommended.

Table 3 - Minimum evaporator tube removal clearance

Model YVAA			Tube removal clearance dimensions					
			A		B		C	
Frame	Cond	Evap	in.	mm	in.	mm	in.	mm
015	3	B	26	660	36	914	132	3353
016	5	B	26	660	36	914	132	3353
017	8	C	26	660	36	914	156	3962
018	3	A	26	660	36	914	144	3658
019	5	A	26	660	36	914	144	3658
019	8	B	26	660	36	914	144	3658
020	0	C	26	660	36	914	156	3962
021	3	A	26	660	36	914	156	3962
021	5	C	26	660	36	914	156	3962
021	8	C	26	660	36	914	156	3962
023	3	B	26	660	36	914	132	3353
024	5	C	26	660	36	914	156	3962
024	8	C	26	660	36	914	156	3962
026	3	B	26	660	36	914	132	3353
027	0	D	26	660	36	914	192	4877
027	3	D	26	660	36	914	192	4877
027	5	E	26	660	36	914	192	4877
027	8	E	26	660	36	914	192	4877
029	5	E	26	660	36	914	192	4877
030	3	C	26	660	36	914	156	3962
030	5	E	26	660	36	914	156	3962
030	8	E	26	660	36	914	156	3962
031	8	E	26	660	36	914	192	4877
032	3	E	26	660	36	914	192	4877
033	3	C	26	660	36	914	156	3962
034	3	E	26	660	36	914	192	4877
034	5	E	26	660	36	914	192	4877
036	8	J	26	660	36	914	192	4877
037	3	F	26	660	36	914	144	3658
037	5	J	26	660	36	914	192	4877
039	8	J	26	660	36	914	192	4877
041	3	H	26	660	36	914	192	4877
042	5	H	26	660	36	914	144	3658
042	8	J	26	660	36	914	192	4877
044	3	G	26	660	36	914	144	3658
047	5	J	26	660	36	914	192	4877
048	3	G	26	660	36	914	144	3658
049	0	K	26	660	36	914	192	4877
050	0	J	26	660	36	914	192	4877
052	3	J	26	660	36	914	192	4877

© 2025 Johnson Controls. All rights reserved.

Vibration isolators

Optional sets of vibration isolators can be supplied loose with each unit.

Use the isolator tables shipped with the unit in the information pack. Identify each mount and its correct location on the unit.

Installation

Place each mount in its correct position and lower the unit carefully onto the mounts ensuring the mount engages in the mounting holes in the unit base frame.

On adjustable mounts, transfer the unit weight evenly to the springs by turning the mount adjusting nuts (located just below the top plate of the mount) counterclockwise to raise and clockwise to lower. This should be done two turns at a time until the top plates of all mounts are between 1/4 in. (6 mm) and 1/2 in. (12 mm) clear of top of their housing and the unit base is level.

Shipping braces

The chiller's modular design does not require shipping braces.

Chilled liquid piping

General requirements

The following piping recommendations are intended to ensure satisfactory operation of the units. Failure to follow these recommendations could cause damage to the unit, or loss of performance, and may invalidate the warranty.

CAUTION

The maximum flow rate and pressure drop for the evaporator must not be exceeded at any time. See *Section 5: Technical data*, ***for details.***

CAUTION

The Maximum acceptable Chilled Liquid pressure in the inlet of Evaporator is same as the statement in **Maximum Tube Side Pressure** ***of Pressure Vessel Name Plate for YVAA with Falling Film Evaporator.***

NOTE

The liquid must enter the evaporator at the inlet connection. The standard inlet connection for the evaporator is opposite the control panel end of the evaporator.
A flow switch must be installed in the customer piping at the outlet of the evaporator and wired back to the control panel using shielded cable.

There should be a straight run of piping of at least 5 pipe diameters on either side. The flow switch should be wired to Terminals 2 and 13 on the 1TB terminal block. A flow switch is required to prevent damage to the evaporator caused by the unit operating without adequate liquid flow.

The flow switch used must have gold plated contacts for low voltage/current operation. Paddle type flow switches suitable for 10 bar (150 psig) working pressure and having a 1 in. N.P.T. connection can be obtained from Johnson Controls as an accessory for the unit. Alternatively, a differential pressure switch fitted across an orifice plate may be used, preferably of the high/low limit type.

Another alternative flow switch is a thermal dispersion flow switch.

The chilled liquid pumps installed in the piping systems should discharge directly into the unit evaporator section of the system. The pumps may be controlled by the chiller controls or external to the unit.

Pipework and fittings must be separately supported to prevent any loading on the evaporator. Flexible connections are recommended which will also minimize transmission of vibrations to the building. Flexible connections must be used if the unit is mounted on anti-vibration mounts, as some movement of the unit can be expected in normal operation.

Piping and fittings immediately next to the evaporator should be readily de-mountable to enable cleaning before operation, and to facilitate visual inspection of the exchanger nozzles.

NOTE

The evaporator must be protected by a strainer, preferably of 3.2 mm or a lower size, fitted as close as possible to the liquid inlet connection, and provided with a means of local isolation.

The evaporator must not be exposed to flushing velocities or debris released during flushing. It is recommended that a suitably sized bypass and valve arrangement is installed to allow flushing of the piping system. The bypass can be used during maintenance to isolate the heat exchanger without disrupting flow to other units. When flushing the system, do not allow system water to flow through the chiller heat exchangers.

Thermometer and pressure gauge connections should be provided on the inlet and outlet connections of each evaporator. Gauges and thermometers are not provided with the unit and are to be furnished by others.

© 2025 Johnson Controls. All rights reserved.

Drain and air vent connections should be provided at all low and high points in the piping to permit drainage of the system and to vent any air in the pipes. Liquid system lines at risk of freezing, due to low ambient temperatures must be protected using insulation and heater tape and/or a suitable glycol solution. The liquid pumps may also be used to ensure liquid is circulated when the ambient temperature approaches freezing point.

Insulation should also be installed around the evaporator nozzles. Heater tape of 21 watts per meter under the insulation is recommended, supplied independently and controlled by an ambient temperature thermostat set to switch ON at approximately 2.2°C (4°F), above the freezing temperature of the chilled liquid.

Evaporator heater mats are installed under the insulation, and are powered from the chiller's control panel. In sub-freezing conditions, unless the evaporator has been drained or an appropriate water-to-glycol concentration is maintained, high voltage power to the chiller must be kept on to ensure the heater mats assist in evaporator freeze protection. If there is a potential for power loss, Johnson Controls requires that the evaporator is drained or that water in the chilled water circuit be replaced with an appropriate water-to-glycol concentration.

CAUTION

Any debris left in the water piping between the strainer and evaporator could cause serious damage to the tubes in the evaporator and must be avoided. Be sure the piping is clean before connecting it to the evaporator. Keep evaporator nozzles and chilled liquid piping capped before installation to ensure construction debris is not allowed to enter.

NOTE

All chiller piping connecting the customer system to the packaged chiller is the responsibility of others. It is not considered part of the chiller package.

CAUTION

The installer/user must also ensure that the quality of the water in circulation is adequate, without any dissolved gases, which can cause oxidation of steel or copper parts within the evaporator.

Evaporator pressure drop

The evaporator is designed in accordance with ARI-590-92 which allows for an increase in pressure drop of up to 15% above the design value shown in the Pressure Drop tables shown in *Figure 8 on page 45* and *Figure 9 on page 45.* Debris in the water may also cause additional pressure drop.

NOTE

Excessive flow above the maximum GPM will damage the evaporator.

NOTE

See Table 8 on page 83 for standard 2-pass and Table 9 on page 87 for optional 3-pass to determine evaporator/frame size and to find the evaporator line to use.

© 2025 Johnson Controls. All rights reserved.

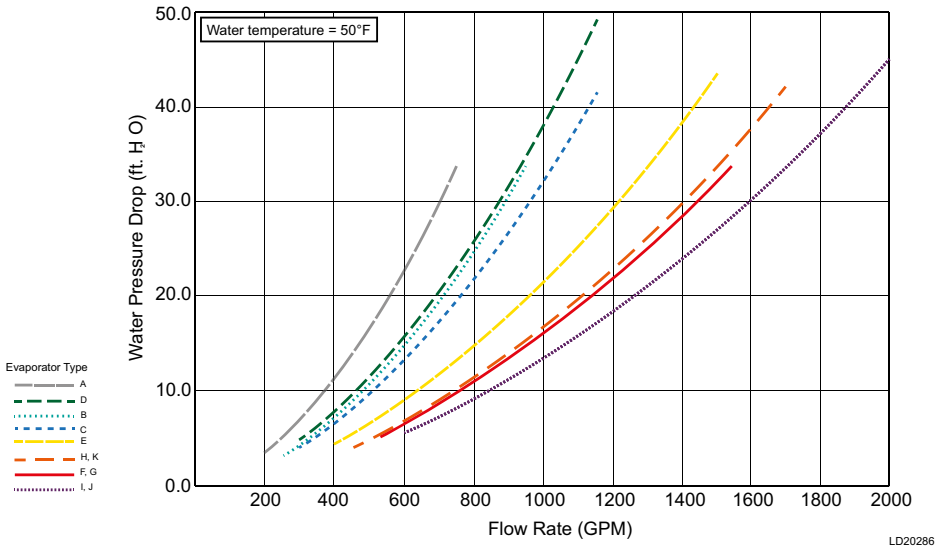

Figure 8 - Two pass water pressure drop, English units

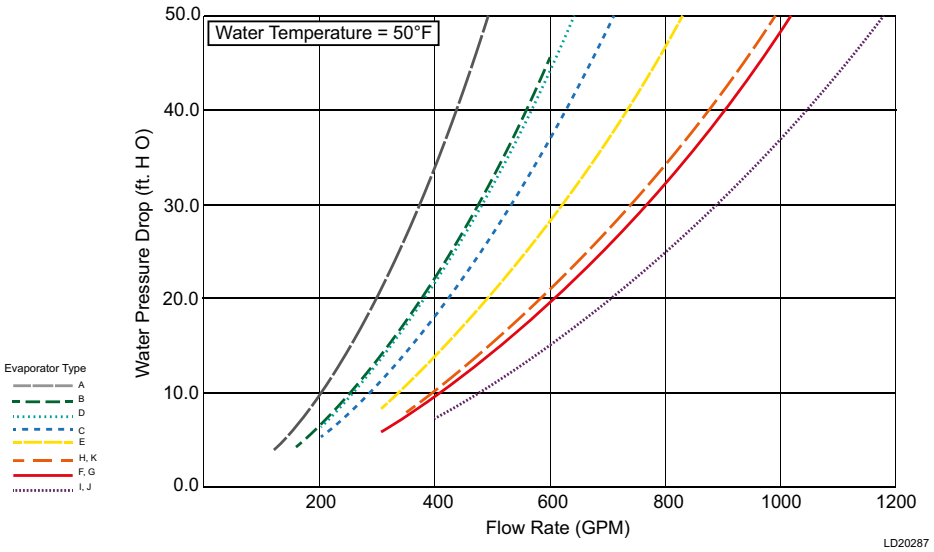

Figure 9 - Three pass water pressure drop, English units

NOTE

See Table 7 on page 79 for optional single pass, Table 8 on page 83 for standard 2-pass and Table 9 on page 87 for optional 3-pass to determine evaporator/frame size and to find the evaporator line to use.

© 2025 Johnson Controls. All rights reserved.

Water treatment

The unit performance provided in the Design Guide is based on a fouling factor of 0.018 m2/hr °C/kW (0.0001 ft2hr°F/Btu). Dirt, scale, grease and certain types of water treatment will adversely affect the heat exchanger surfaces and therefore the unit performance. Foreign matter in the water systems can increase the heat exchanger pressure drop, reducing the flow rate and causing potential damage to the heat exchanger tubes.

Aerated, brackish or salt water is not recommended for use in the water systems. Johnson Controls recommends that a water treatment specialist should be consulted to determine whether the proposed water composition will adversely affect the evaporator materials of carbon steel and copper. The pH value of the water flowing through the evaporator must be kept in a range between 7 and 8.5.

Pipework arrangement

The following is a suggested piping arrangement for single unit installations.

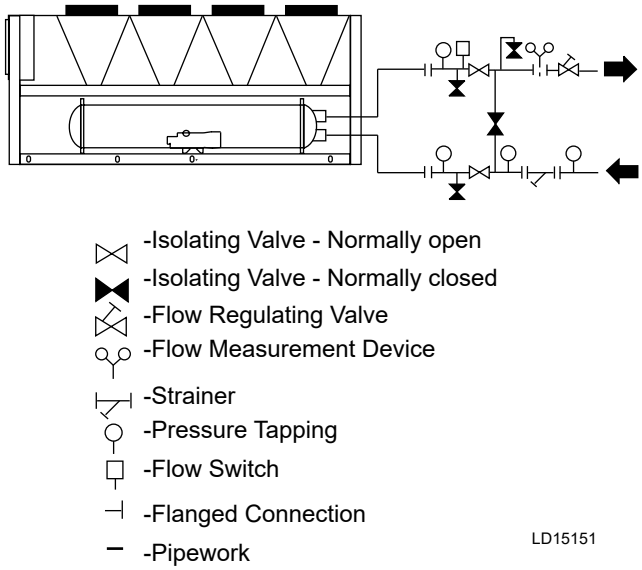

Figure 10 - Pipework arrangement

Minimum water volume

It is good practice to include as much water volume as possible in a chilled water loop. This increases the thermal mass and flywheel effect within the system (that is, the more; the better) which in turn promotes stable water temperature control and increases reliability by reducing compressor cycling.

For air conditioning applications, a minimum of 3 gallons/ton is required. with a preferred gallon/ton ratio to be within the 5 to 8 range. For process applications, a minimum of 6 gallons/ton ratio is required with preference towards a range of 7 to 11. Install a tank or increase pipe sizes to provide sufficient water volume.

Leaving water temperature out of range

The YVAA chiller line has a maximum leaving water temperature of 15.6°C (60°F). Where process applications require a chilled water temperature higher than what the chiller provides, a simple piping change can remove the problem. By using a mixture of chiller-cooled water and returning process water, the chilled water entering the process can be held at the desired temperature. A tank can also be used to meet high leaving water temperature requirements.

Each YVAA evaporator has a minimum and maximum flow rate. Some process applications require a flow rate that is out of range for the evaporator. In those applications, a piping change can remove the problem.

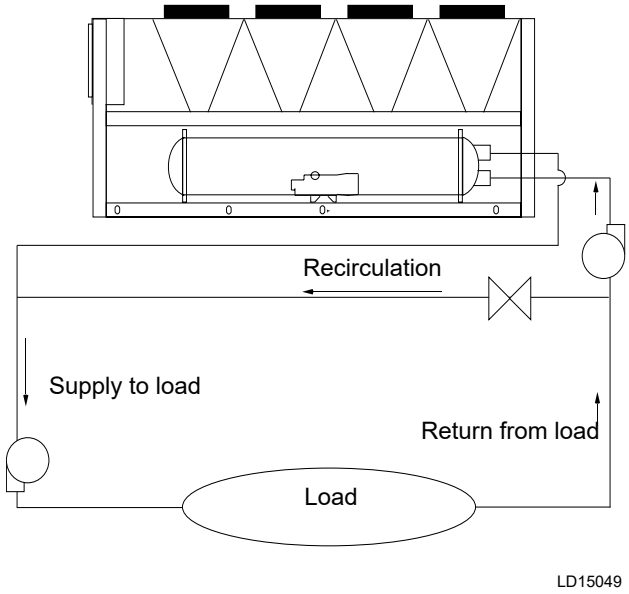

Figure 11 - Leaving water temperature out of range suggested layout

In applications where the required flow rate is less than the evaporator's minimum allowable, the chilled water can be recirculated to the chiller.

© 2025 Johnson Controls. All rights reserved.

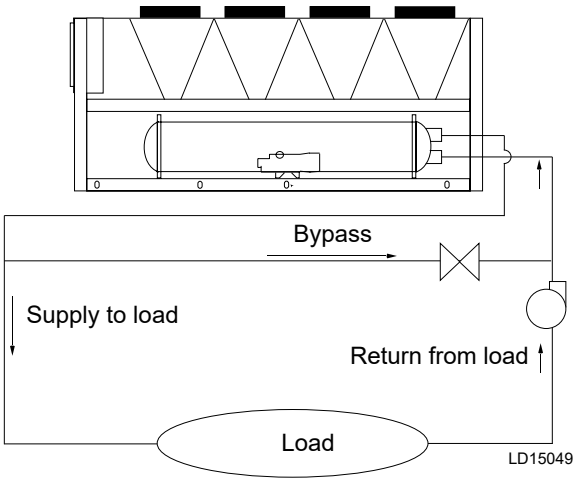

Figure 12 - Suggested layout for applications with a flow rate less than the evaporator minimum allowable flow rate

In applications where the required flow rate is greater than the evaporator's maximum allowable, the chilled water can be recirculated to the load.

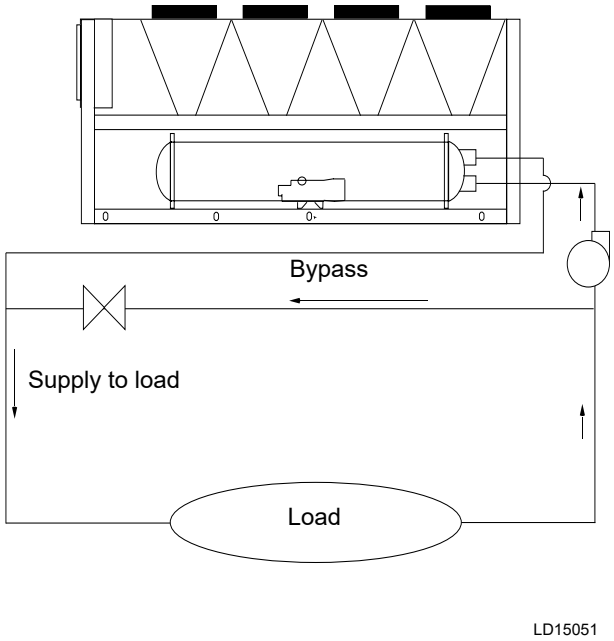

Figure 13 - Suggested layout for applications with a flow rate greater than the evaporator maximum allowable flow rate

Thermal storage

Thermal storage is the practice of storing cooling energy during a period of little or no load and/or low energy costs for use during periods of high load and/or energy costs. Conventional cooling systems produce cooling when it is needed which is commonly during times of peak demand. Thermal storage allows generation of cooling capacity to occur during off-peak periods and store that capacity to meet future cooling requirements. Using thermal storage can result in smaller equipment sizes, thereby reducing capital cost, and also can result in significant energy cost savings.

The YVAA has special control logic to be able to produce chilled leaving brine temperatures below 4.4°C (40°F) so as to supply a storage tank with chilled liquid during times of low demand. YVAA chillers selected for thermal storage operation can also be selected to efficiently provide chilled fluid at nominal cooling loads.

Variable primary flow

Johnson Controls recommends a maximum 10% per minute flow rate of change, based on design flow, for variable primary flow applications. Provide 8 to 10 gallons per chiller ton (8.6 to 10.8 liter per cooling KW) system water volume. Insufficient system volume and rapid flow changes can cause control problems or can even cause chiller shutdowns. There are many other design issues to evaluate with variable primary flow systems. Consult your Johnson Controls Sales Office for more information about successfully applying YVAA chillers.

Connection types and sizes

For connection sizes relevant to individual models see *Section 5: Technical data*.

Evaporator connections

Standard chilled liquid connections on evaporators are of the grooved type for ASME and PED marked units and Flange type for GB marked units. See *Figure 14 on page 47* for flange dimensions on GB marked vessels.

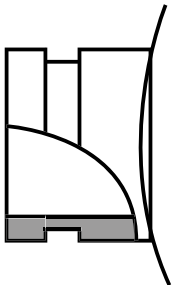

Figure 14 - Grooved nozzle

© 2025 Johnson Controls. All rights reserved.

Table 4 - Evaporator connections dimensions

Frame	Cond	Evap	Grooved size, in.	Nominal diameter	Flange dimensions (GB only) mm *							Qty
					B	C	D	K	L	D	N	
015	3	B	6	DN150	170.5	27	280	241.5	22	216	8	2
016	5	B	6	DN150	170.5	27	280	241.5	22	216	8	2
017	8	C	6	DN150	170.5	27	280	241.5	22	216	8	2
018	3	A	6	DN150	170.5	27	280	241.5	22	216	8	2
019	5	A	6	DN150	170.5	27	280	241.5	22	216	8	2
019	8	B	6	DN150	170.5	27	280	241.5	22	216	8	2
020	0	C	6	DN150	170.5	27	280	241.5	22	216	8	2
021	3	A	6	DN150	170.5	27	280	241.5	22	216	8	2
021	5	C	6	DN150	170.5	27	280	241.5	22	216	8	2
021	8	C	6	DN150	170.5	27	280	241.5	22	216	8	2
023	3	B	6	DN150	170.5	27	280	241.5	22	216	8	2
024	5	C	6	DN150	170.5	27	280	241.5	22	216	8	2
024	8	C	6	DN150	170.5	27	280	241.5	22	216	8	2
026	3	B	6	DN150	170.5	27	280	241.5	22	216	8	2
027	0	D	6	DN150	170.5	27	280	241.5	22	216	8	2
027	3	D	6	DN150	170.5	27	280	241.5	22	216	8	2
027	5	E	8	DN200	221.5	27	345	298.5	22	270	8	2
027	8	E	8	DN200	221.5	27	345	298.5	22	270	8	2
029	5	E	8	DN200	221.5	27	345	298.5	22	270	8	2
030	3	C	6	DN150	170.5	27	280	241.5	22	216	8	2
030	5	C	6	DN150	170.5	27	280	241.5	22	216	8	2
030	8	E	8	DN200	221.5	27	345	298.5	22	270	8	2
031	8	E	8	DN200	221.5	27	345	298.5	22	270	8	2
032	3	E	8	DN200	221.5	27	345	298.5	22	270	8	2
033	3	C	6	DN150	170.5	27	280	241.5	22	216	8	2
034	3	E	8	DN200	221.5	27	345	298.5	22	270	8	2
034	5	E	8	DN200	221.5	27	345	298.5	22	270	8	2
036	8	J	8	DN200	221.5	27	345	298.5	22	270	8	2
037	3	F	8	DN200	221.5	27	345	298.5	22	270	8	2
037	5	J	8	DN200	221.5	27	345	298.5	22	270	8	2
039	8	J	8	DN200	221.5	27	345	298.5	22	270	8	2
041	3	H	8	DN200	221.5	27	345	298.5	22	270	8	2
042	5	H	8	DN200	221.5	27	345	298.5	22	270	8	2
042	8	J	8	DN200	221.5	27	345	298.5	22	270	8	2
044	3	G	8	DN200	221.5	27	345	298.5	22	270	8	2
047	5	J	8	DN200	221.5	27	345	298.5	22	270	8	2
048	3	G	8	DN200	221.5	27	345	298.5	22	270	8	2
049	0	K	8	DN200	221.5	27	345	298.5	22	270	8	2
050	0	J	8	DN200	221.5	27	345	298.5	22	270	8	2
052	3	J	8	DN200	221.5	27	345	298.5	22	270	8	2

* See *Figure 11 on page 44* for flange dimensions.

© 2025 Johnson Controls. All rights reserved.

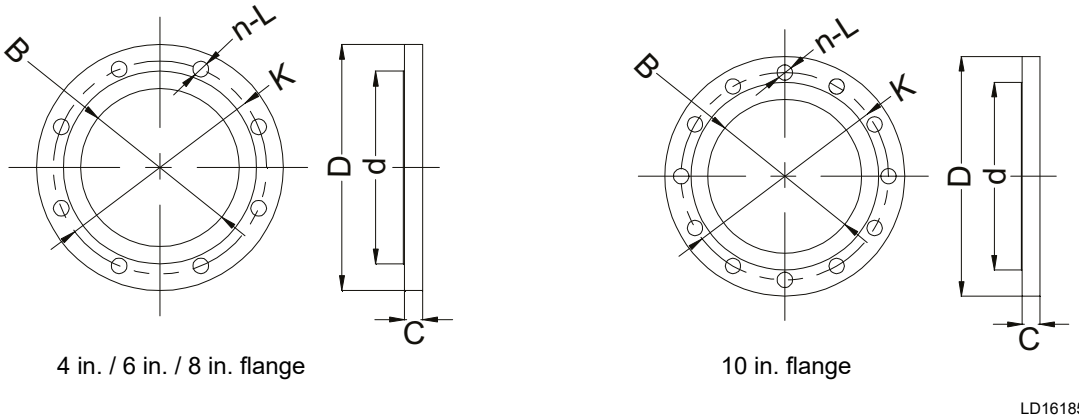

Figure 15 - Flange for GB vessels

Option flanges

One of two types of flanges may be fitted depending on the customer or local pressure vessel code requirements. These are grooved adapter flanges, normally supplied loose, or weld flanges, which may be supplied loose or ready-fitted. Grooved adapter and weld flange dimensions are to ISO 7005 - NP10.

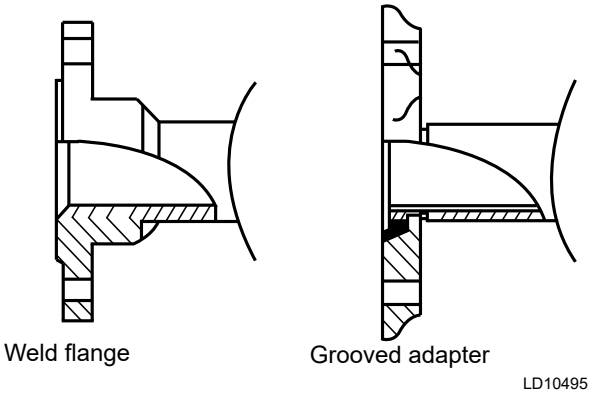

Figure 16 - Flange attachment

Refrigerant relief valve piping

The evaporator is protected against internal refrigerant overpressure by refrigerant relief valves. A pressure relief valve is mounted on each of the main refrigerant lines connecting the evaporator to the compressors.

A piece of pipe is fitted to each valve and directed so that when the valve is activated the release of high pressure gas and liquid cannot be a danger or cause injury. For indoor installations (not recommended), pressure relief valves should be piped to the exterior of the building.

The size of any piping attached to a relief valve must be of sufficient diameter so as not to cause resistance to the operation of the valve. Unless otherwise specified by local regulations. Internal diameter depends on the length of pipe required and is given by the following formula:

$$D^5 = 1.447 \times L$$

Where:

- D = minimum pipe internal diameter in cm
- L = length of pipe in meters

If relief piping is common to more than one valve, its cross-sectional area must be at least the total required by each valve. Valve types should not be mixed on a common pipe. Precautions should be taken to ensure the outlets of relief valves or relief valve vent pipes remain clear of obstructions at all times.

Electrical connection

The following connection recommendations are intended to ensure safe and satisfactory operation of the unit. Failure to follow these recommendations could cause harm to persons or damage the unit, and may invalidate the warranty.

WARNING

No additional controls (relays, and so on) should be mounted in the control panel. Power and control wiring not connected to the control panel should not be run through the control panel. If these precautions are not followed it could lead to a risk of electrocution. In addition, electrical noise could cause malfunctions or damage the unit and its controls.

© 2025 Johnson Controls. All rights reserved.

WARNING

After power wiring connection, do not switch on mains power to the unit. Some internal components are live when the mains are switched on and this must only be done by authorized persons familiar with starting, operating, and troubleshooting this type of equipment.

WARNING

The removable conduit entry plates, located on the bottom and side of the variable speed drive enclosure, must be removed from the enclosure prior to using tools to cut out the appropriate size knockouts for conduit entry.
Do not make any penetrations into the drive enclosure, except through the conduit entry plates when they are removed from the drive. Failure to remove the conduit entry plates prior to cutting appropriately sized knockouts can result in an arc flash event which can cause damage to the equipment or injury to personnel.

WARNING

Use a tool that is designed to cut large diameter wire to cut the incoming power and ground wiring to length outside of the drive enclosure. Do not use a grinder, reciprocating saw, or any similar tool to cut wires to length. Failure to use the appropriate tool to cut wiring can result in an arc flash event which can cause damage to the equipment or injury to personnel.

Power wiring

All electrical wiring should be carried out in accordance with local regulations. Route properly sized cables to cable entries on the unit.

In accordance with local codes, NEC codes, U.L. and C.E. standards, it is the responsibility of the user to install over current protection devices between the supply conductors and the power supply terminals on the unit.

To ensure that no eddy currents are set up in the power panel, the cables forming the 3-phase power supply must enter using the same cable entry.

WARNING

All sources of supply to the unit must be taken using a common point of isolation (not supplied by Johnson Controls).

Copper power wiring only should be used for supplying power to the chiller. This is recommended to avoid safety and reliability issues resulting from connection failure at the power connections to the chiller. Aluminum wiring is not recommended due to thermal characteristics that may cause loose terminations resulting from the contraction and expansion of the wiring. Aluminum oxide may also build up at the termination causing hot spots and eventual failure. If aluminum wiring is used to supply power to the chiller, AL-CU compression fittings should be used to transition from aluminum to copper. This transition should be done in an external box separate to the power panel. Copper conductors can then be run from the box to the chiller.

WARNING

Caulk power and control wiring conduit entering the power panel to ensure moist air from the building cannot enter the panel.

Power supply wiring

- Units require only one 3-phase supply, plus earth.
- Connect the 3-phase supplies to the circuit breaker located in the panel See *Table 5 on page 60*.
- Connect a suitably sized earth wire to the PE terminal in the panel.

115 VAC control supply transformer

A 3-wire high voltage to 115 VAC supply transformer is standard in the chiller. This transformer is mounted in the cabinet and steps down the high voltage supply to 115 VAC to be used by the controls, VSD, Feed and Drain Valve Controller, valves, solenoids, heaters, and so on.

The high voltage for the transformer primary is taken from the chiller input. Fusing is provided for the transformer.

WARNING

Removing high voltage power to the chiller will remove the 115 VAC supply voltage to the control panel circuitry and the evaporator heater mat. In subfreezing weather, this could cause serious damage to the chiller due to evaporator freeze-up. Do not remove power unless alternate means are taken to ensure operation of the control panel, evaporator heater mat, and waterbox heaters.

© 2025 Johnson Controls. All rights reserved.

Control wiring

All control wiring utilizing contact closures to the control panel terminal block is nominal 115 VAC and must be run in shielded cable, with the shield grounded at the panel end only, and run in water tight conduit. Run shielded cable separately from mains cable to avoid electrical noise pick-up. Use the control panel cable entry to avoid the power cables.

Voltage free contacts connected to the panel must be suitable for 115 VAC 10 mA (gold contacts recommended). If the voltage free contacts form part of a relay or contactor, the coil of the device must be suppressed using a standard R/C suppressor. The above precautions must be taken to avoid electrical noise, which could cause a malfunction or damage to the unit and its controls.

Volts free contacts

Chilled liquid pump starter

Terminals 23 and 24 on 1TB close to start the chilled liquid pump. This contact can be used as a master start/stop for the pump in conjunction with the daily start/stop schedule. Cycle the pumps from the unit panel if the unit will be operational or shut-down during sub-freezing conditions. See *Evaporator pump control on Page 119*, for more information on testing the pumps.

Run contact

Terminals 21 and 22 on 1TB close to indicate that a system is running.

Alarm contacts

Each system has a single voltage-free contact, which will operate to signal an alarm condition whenever any system locks out, or there is a power failure. To obtain system alarm signal, connect the alarm circuit to volt free Terminals 25 & 26 (Sys 1), Terminals 27 and 28 (Sys 2) of 1TB.

System inputs

Flow switch

A chilled liquid flow switch of suitable type MUST be connected between Terminals 2 and 13 of 1TB to provide protection against loss of liquid flow, which will cause evaporator freeze-up if the chiller is permitted to run. The flow switch circuitry is a 115 VAC circuit. Contacts must be rated for low current (5 mA). Gold contacts should be used.

Generally, the thermal dispersion flow switch is shipped with the unit as a loose part.

To mount the IFM thermal dispersion switch, use the following guidelines:

- Use a pipe coupling to mount the thermal dispersion flow switch. See *Figure 21 on page 57.* The length of the pipe coupling must be suitable to ensure that the insertion depth of the sensor is at least 12 mm.
- Mount the thermal dispersion flow switch in horizontal pipes from the side. If it has to be mounted in vertical pipes, mount the switch in the rising pipes.
- Mount the thermal dispersion flow switch on the top of the horizontal pipes only if the pipe is fully filled with liquid. Mount the thermal dispersion flow switch on the bottom of the horizontal pipes only if the pipe is free from buildup.
- Ensure that the sensor tip does not contact the pipe wall. Do not mount it in a downpipe, in which the liquid flows downwards.
- Avoid turbulence of the liquid resulting from bends, valves, reducers, and other pipe fittings. Ensure that the distance from the potential turbulence upstream or downstream of the sensor location is at least 5 times of the pipe diameter.
- Connect the control monitor with the flow sensor directly. No extension cable between them is allowed.

Remote run/stop

A Remote Run/Stop input is available for each system. These inputs require a dry contact to start and stop the system. System 1 remote dry contacts are connected between Terminals 2 and 15 of 1TB and System 2 dry contacts are connected between Terminals 2 and 16 of 1TB. If remote start/stop is not utilized, a jumper must be paced across the terminals to allow the system to run. The remote run/stop circuitry is a 115 VAC circuit. Contacts must be rated for low current (5 mA). Gold contacts should be used.

© 2025 Johnson Controls. All rights reserved.

Remote print

Closure of suitable contacts connected to Terminals 2 and 14 of 1TB will cause a hard copy printout of Operating Data/Fault History to be made if an optional printer is connected to the RS-232 port. The remote print circuitry is a 115 VAC circuit. Contacts must be rated for low current (5 mA). Gold contacts should be used.

NOTE

Closing the print contact will interfere with communications to the SC-EQ.

Optional remote setpoint offset – temperature

A voltage signal connected to Terminals 17 and 18 of 1TB will provide a remote offset function of the chilled liquid setpoint, if required.

Optional remote setpoint offset – current

A voltage signal connected to Terminals 19 and 20 of 1TB will provide a remote setting of current limit setpoint, if required.

Optional remote setpoint offset – sound limiting

A voltage signal connected to Terminals 40 and 41 of 1TB will provide remote setting of sound limit setpoint, if required.

© 2025 Johnson Controls. All rights reserved.

Power supply wiring

Single point wiring

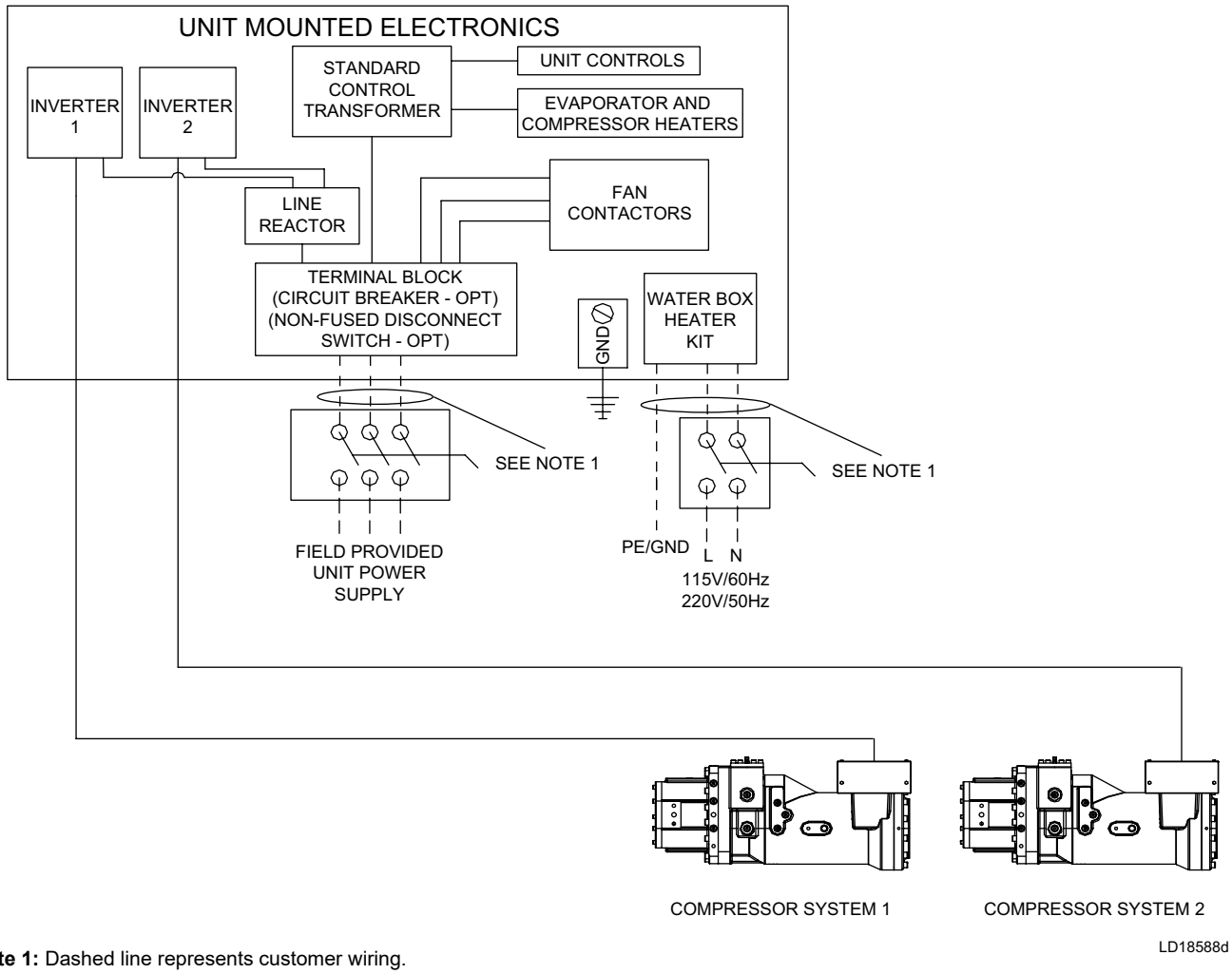

Note 1: Dashed line represents customer wiring.

NOTE

Minimum Circuit Ampacity (MCA), Minimum/Maximum Fuse Size, and Minimum/Maximum Circuit Breaker size vary on chillers based upon model and options ordered. Consult YorkWorks or the chiller data plate for electrical data on a specific chiller.

Voltage utilization range

Rated voltage	Utilization range
200/60/3	180–220
230/60/3	208–254
380/60/3	342–418
400/60/3	360–440
460/60/3	414–508
575/60/3	520–635
400/50/3	360–440

Figure 17 - Single point power wiring

© 2025 Johnson Controls. All rights reserved.

Dual point wiring

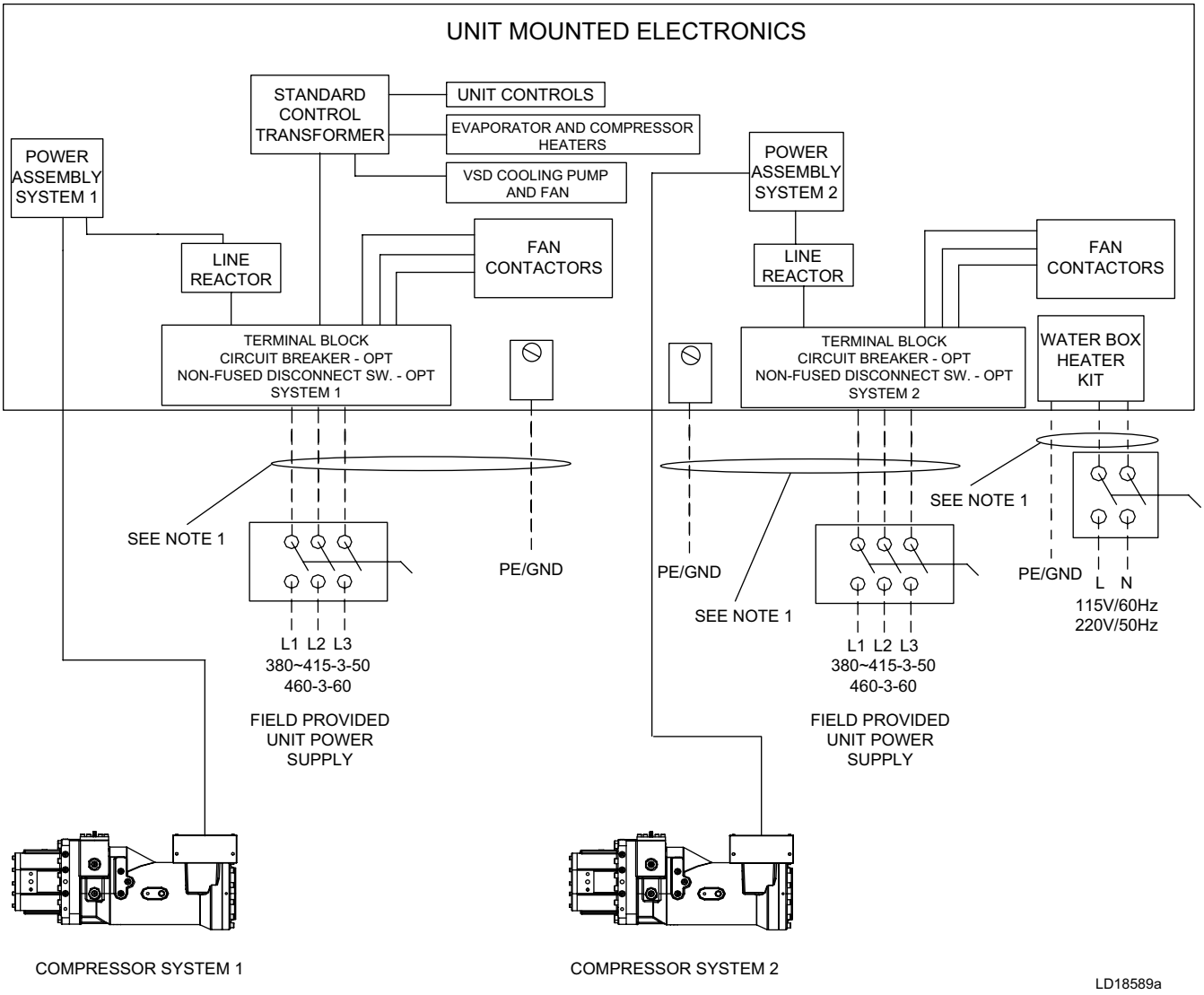

Note 1: Dashed line represents customer wiring.

NOTE

Minimum Circuit Ampacity (MCA), Minimum/Maximum Fuse Size, and Minimum/Maximum Circuit Breaker size vary on chillers based upon model and options ordered. Consult YorkWorks or the chiller data plate for electrical data on a specific chiller.

Voltage utilization range

Rated voltage	Utilization range
200/60/3	180–220
230/60/3	208–254
380/60/3	342–418
400/60/3	360–440
460/60/3	414–508
575/60/3	520–635
400/50/3	360–440

Figure 18 - Dual point power wiring

© 2025 Johnson Controls. All rights reserved.

Customer control wiring

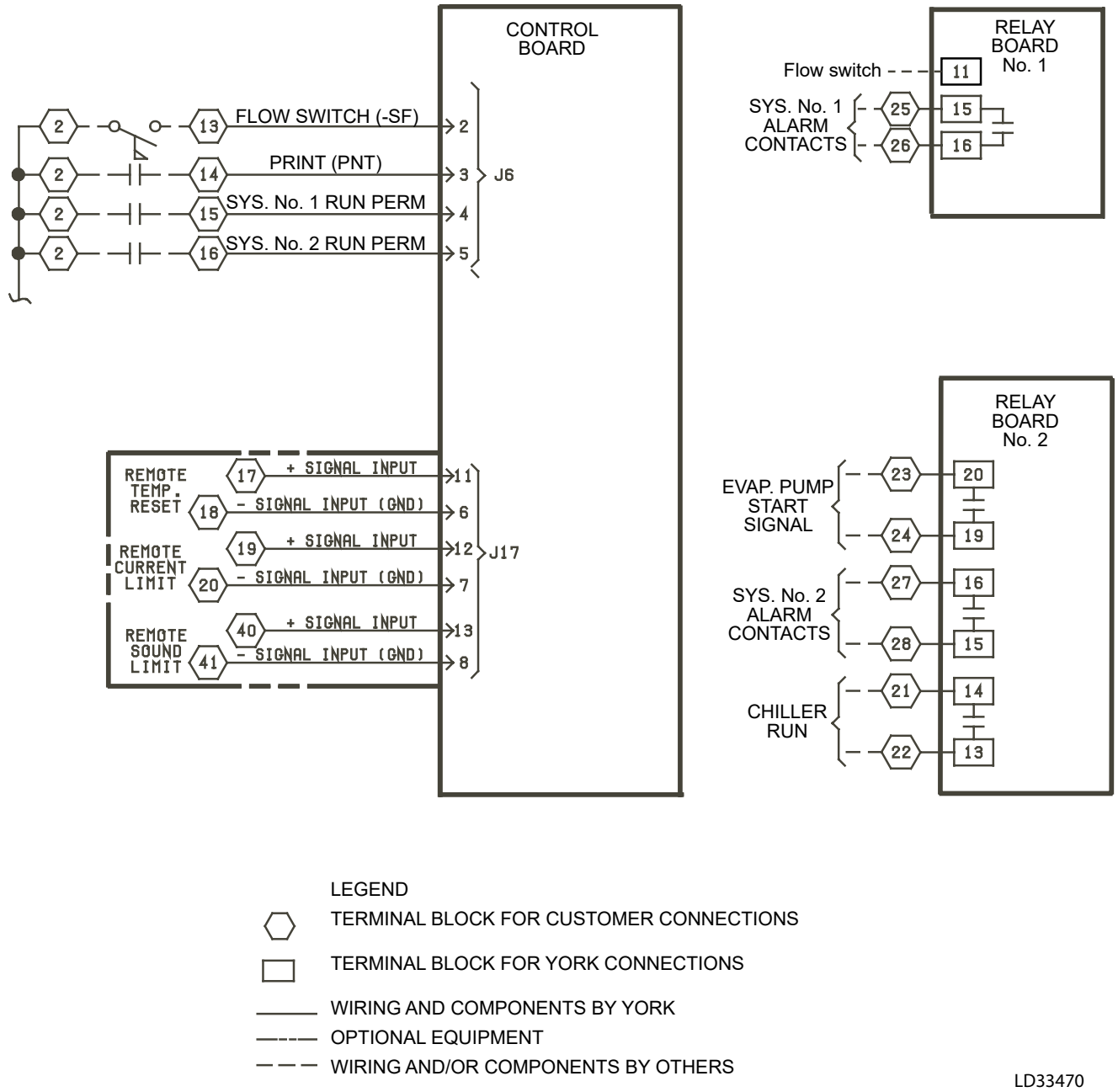

CAUTION

In subfreezing regions, failure to connect EVAP. PUMP START SIGNAL from terminal 23 and terminal 24 to chilled water pump starter will void warranty, except when the water in the evaporator is fully dried or appropriate concentration of glycol is reached in the water system.

Figure 19 - Customer control connections

© 2025 Johnson Controls. All rights reserved.

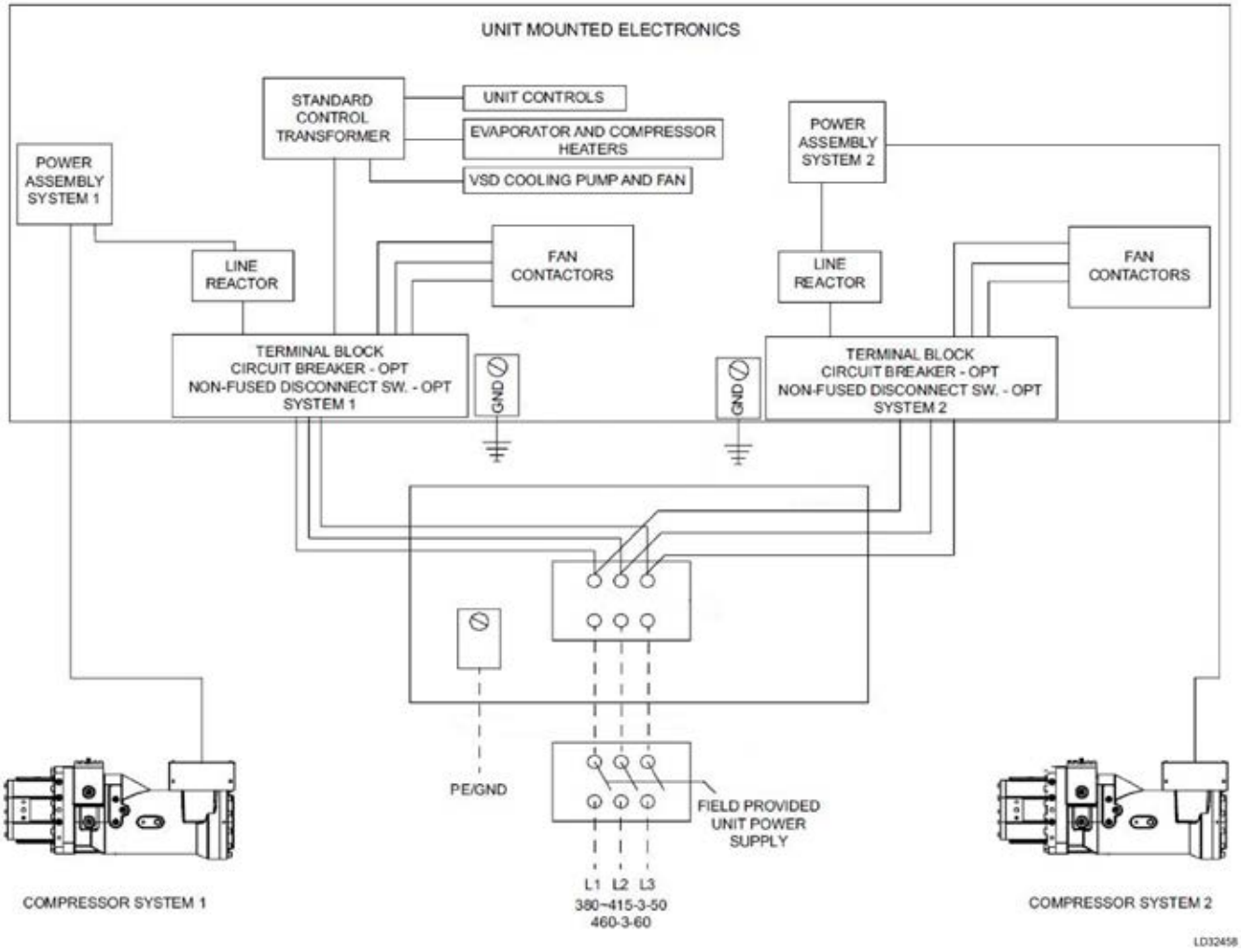

Figure 20 - Single point kit connection

© 2025 Johnson Controls. All rights reserved.

Thermal dispersion flow switch connections

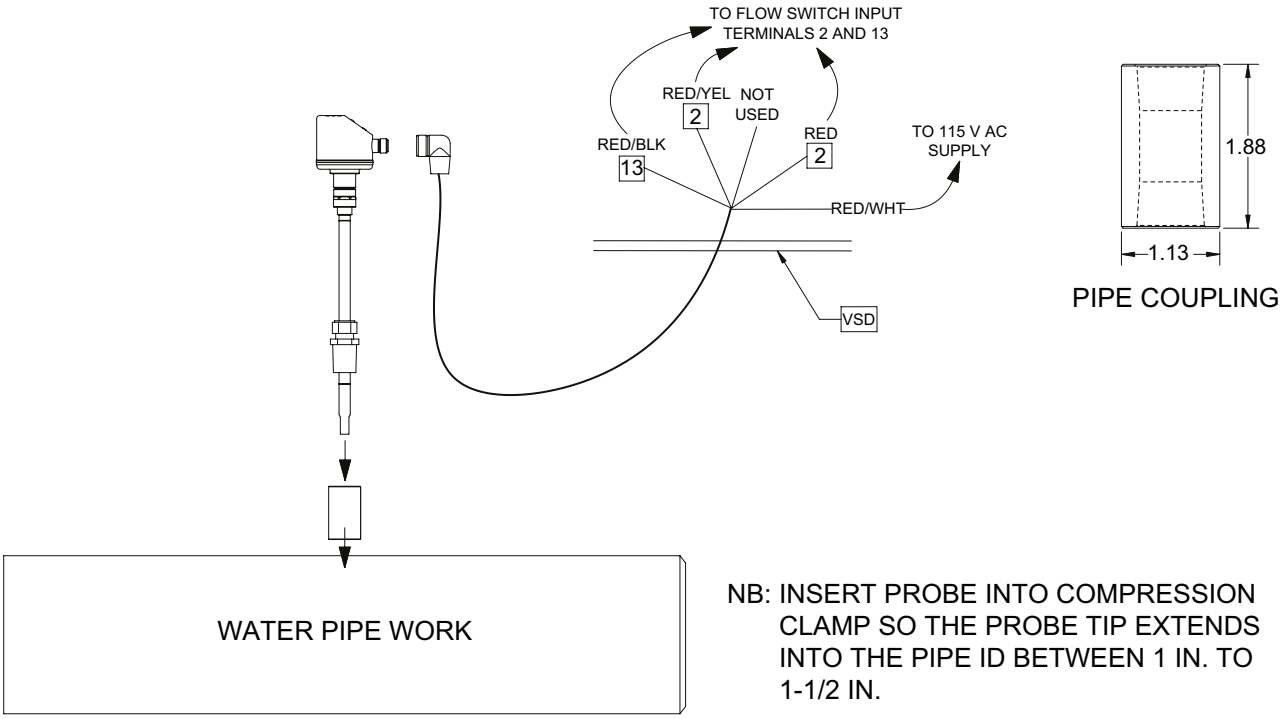

Flow switch connections

Wire color	Connection in VSD panel
Red/Black	ITB - 13
Red/Yellow	ITB - 2
Red	ITB - 2
Red/White	Terminal No. 11 in relay board No. 1 (115 VAC)
Green	Not used

Figure 21 - Thermal dispersion flow switch connections

© 2025 Johnson Controls. All rights reserved.

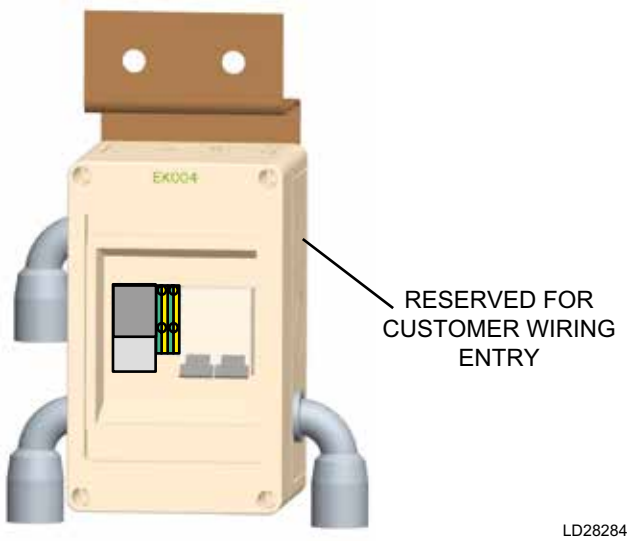

Figure 22 - Reserved customer wiring entry

For YVAA chillers, if the water box heater option is available, the customer has to connect a 115 V/60 Hz or 220 V/50 Hz, single-phase power supply to the wiring box of the water box heater. The wiring box protects the water box of the evaporator from freezing under low ambient. The customer needs to break the reserved customer wiring entry, as shown in *Figure 22*, with the wiring going through an appropriate 90 degrees conduit. After connecting the wires, water proofing measures need to be taken to meet IP65.

CAUTION

Failure to connect the power connection to the water box heater wiring box, or to meet IP65, will void warranty.

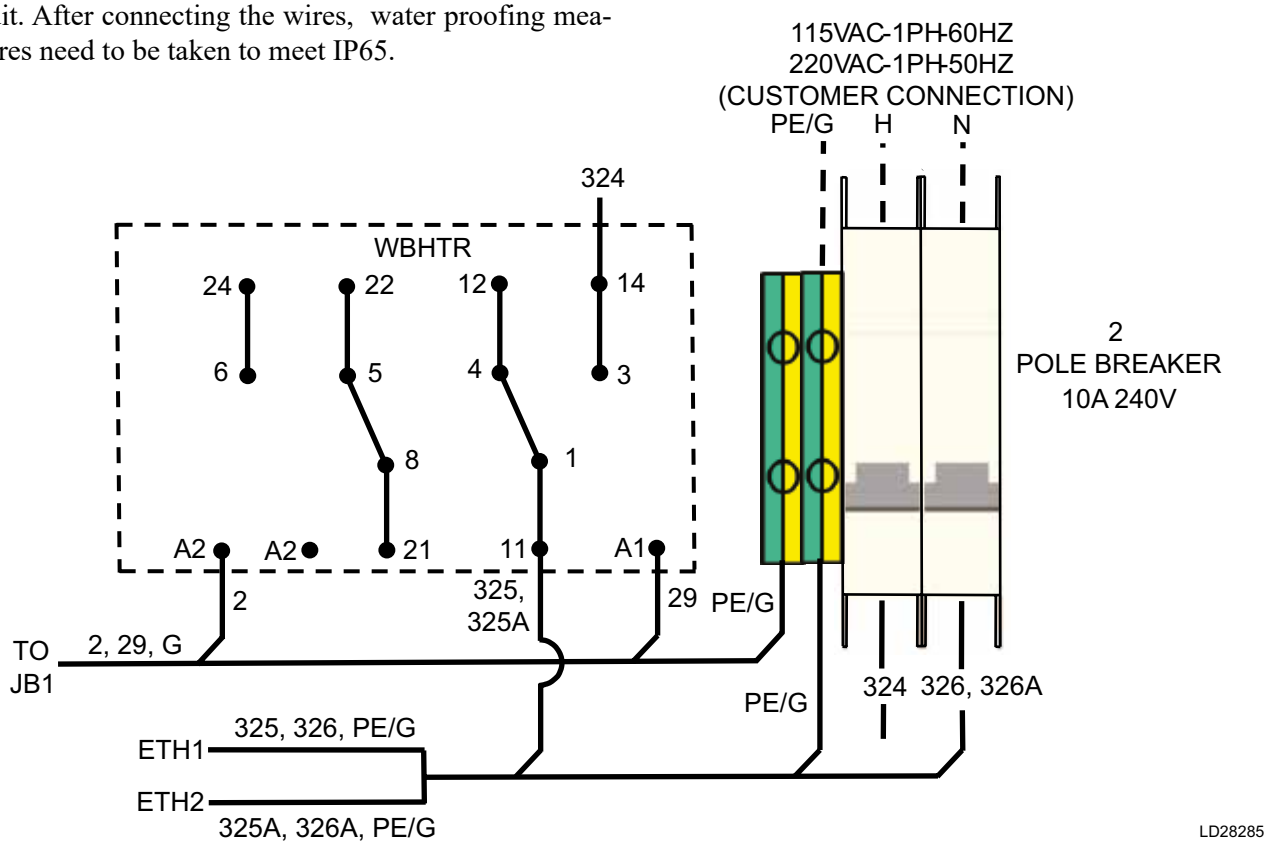

Figure 23 - Water box heater wiring box

© 2025 Johnson Controls. All rights reserved.

Connect the 115 V/60 Hz or 220 V/50 Hz power supply to the top terminals of the 2-pole-breaker, as shown in *Figure 23*. Connect the hot line to terminal H and the neutral line to terminal N. After connecting the terminals, turn on the breaker only when the evaporator is filled with water in waterside. The recommended power supply wiring size is 18-4-AWG.

CAUTION

Before turning on the breaker, make sure the evaporator is filled with water. Misoperation will void warranty and a water box heater fail, which will lead to the freezing of the evaporator.

CAUTION

Evaporator heaters used in the unit may malfunction without alarm. Once the heater failure is found under subfreezing condition, stop using the chiller and drain off water from the evaporator completely to protect the evaporator from freezing.

© 2025 Johnson Controls. All rights reserved.

Table 5 - Electrical lug data

Field wiring lugs					Standard and ultra quiet condenser fans					
					Terminal block		Circuit breaker		Non-fused disconnect switch	
YVAA MODEL			Input volts	Input freq	Wires per phase	Lug wire range	Wires per phase	Lug wire range	Wires per phase	Lug wire range
Frame	Cond	Evap								
Single point wiring										
015	3	B	200	60	4	#2 - 600 kcmil				
			230	60	4	#2 - 600 kcmil	4	4/0 ~ 500 kcmil		
			380	60	2	#2 - 600 kcmil	2	#2/0 ~ 500 kcmil	2	#2 - 600 kcmil
			400	50	2	#2 - 600 kcmil	2	#2/0 ~ 500 kcmil	2	#2 - 600 kcmil
			460	60	2	#2 - 600 kcmil	2	#1 ~ 500 kcmil	2	#2 - 600 kcmil
			575	60	2	#2 - 600 kcmil	2	#1 ~ 500 kcmil	2	#2 ~ 600 kcmil
016	5	B	200	60	4	#2 - 600 kcmil				
			230	60	4	#2 - 600 kcmil	4	4/0 ~ 500 kcmil		
			380	60	2	#2 - 600 kcmil	2	#2/0 ~ 500 kcmil	2	#2 - 600 kcmil
			400	50	2	#2 - 600 kcmil	2	#2/0 ~ 500 kcmil	2	#2 - 600 kcmil
			460	60	2	#2 - 600 kcmil	2	#1 ~ 500 kcmil	2	#2 - 600 kcmil
			575	60	2	#2 - 600 kcmil	2	#1 ~ 500 kcmil	2	#2 ~ 600 kcmil
017	8	C	200	60	4	#2 - 600 kcmil				
			230	60	4	#2 - 600 kcmil	4	4/0 ~ 500 kcmil		
			380	60	2	#2 - 600 kcmil	2	#2/0 ~ 500 kcmil	2	#2 - 600 kcmil
			400	50	2	#2 - 600 kcmil	2	#2/0 ~ 500 kcmil	2	#2 - 600 kcmil
			460	60	2	#2 - 600 kcmil	2	#1 ~ 500 kcmil	2	#2 - 600 kcmil
			575	60	2	#2 - 600 kcmil	2	#1 ~ 500 kcmil	2	#2 ~ 600 kcmil
018	3	A	200	60	4	#2 - 600 kcmil				
			230	60	4	#2 - 600 kcmil	4	4/0 ~ 500 kcmil		
			380	60	2	#2 - 600 kcmil	2	#1 ~ 500 kcmil	3	#2 ~ 600 kcmil
			400	50	2	#2 - 600 kcmil	2	#1 ~ 500 kcmil	3	#2 ~ 600 kcmil
			460	60	2	#2 - 600 kcmil	2	#1 ~ 500 kcmil	2	#2 - 600 kcmil
			575	60	2	#2 - 600 kcmil	2	#1 ~ 500 kcmil	2	#2 ~ 600 kcmil
019	5	A	200	60	4	#2 - 600 kcmil				
			230	60	4	#2 - 600 kcmil	4	4/0 ~ 500 kcmil		
			380	60	2	#2 - 600 kcmil	2	#1 ~ 500 kcmil	3	#2 ~ 600 kcmil
			400	50	2	#2 - 600 kcmil	2	#1 ~ 500 kcmil	3	#2 ~ 600 kcmil
			460	60	2	#2 - 600 kcmil	2	#1 ~ 500 kcmil	2	#2 - 600 kcmil
			575	60	2	#2 - 600 kcmil	2	#1 ~ 500 kcmil	2	#2 ~ 600 kcmil
019	8	B	200	60	4	#2 - 600 kcmil				
			230	60	4	#2 - 600 kcmil	4	4/0 ~ 500 kcmil		
			380	60	2	#2 - 600 kcmil	2	#1 ~ 500 kcmil	3	#2 ~ 600 kcmil
			400	50	2	#2 - 600 kcmil	2	#1 ~ 500 kcmil	3	#2 ~ 600 kcmil
			460	60	2	#2 - 600 kcmil	2	#1 ~ 500 kcmil	2	#2 - 600 kcmil
			575	60	2	#2 - 600 kcmil	2	#1 ~ 500 kcmil	2	#2 ~ 600 kcmil
020	0	C	200	60	4	#2 - 600 kcmil				
			230	60	4	#2 - 600 kcmil	4	4/0 ~ 500 kcmil		
			380	60	3	#2 - 600 kcmil	3	3/0 ~ 400 kcmil	3	#2 ~ 600 kcmil
			400	50	3	#2 - 600 kcmil	3	3/0 ~ 400 kcmil	3	#2 ~ 600 kcmil
			460	60	2	#2 - 600 kcmil	2	#1 ~ 500 kcmil	3	#2 - 600 kcmil
			575	60	2	#2 - 600 kcmil	2	#1 ~ 500 kcmil	2	#2 ~ 600 kcmil
021	3	A	200	60	4	#2 - 600 kcmil				
			230	60	4	#2 - 600 kcmil	4	4/0 ~ 500 kcmil		
			380	60	2	#2 - 600 kcmil	2	#1 ~ 500 kcmil	3	#2 ~ 600 kcmil
			400	50	2	#2 - 600 kcmil	2	#1 ~ 500 kcmil	3	#2 ~ 600 kcmil
			460	60	2	#2 - 600 kcmil	2	#1 ~ 500 kcmil	2	#2 - 600 kcmil
			575	60	2	#2 - 600 kcmil	2	#1 ~ 500 kcmil	2	#2 ~ 600 kcmil
021	5	C	200	60	4	#2 - 600 kcmil				
			230	60	4	#2 - 600 kcmil	4	4/0 ~ 500 kcmil		
			380	60	2	#2 - 600 kcmil	2	#1 ~ 500 kcmil	3	#2 ~ 600 kcmil
			400	50	2	#2 - 600 kcmil	2	#1 ~ 500 kcmil	3	#2 ~ 600 kcmil
			460	60	2	#2 - 600 kcmil	2	#1 ~ 500 kcmil	2	#2 - 600 kcmil
			575	60	2	#2 - 600 kcmil	2	#1 ~ 500 kcmil	2	#2 ~ 600 kcmil

© 2025 Johnson Controls. All rights reserved.

Table 4 - Electrical lug data (cont'd)

Field wiring lugs					High airflow/high static condenser fans					
					Terminal block		Circuit breaker		Non-fused disconnect switch	
YVAA model			Input volts	Input freq	Wires per phase	Lug wire range	Wires per phase	Lug wire range	Wires per phase	Lug wire range
Frame	Cond	Evap								
Single point wiring										
015	3	B	200	60	4	#1/0 ~ 700 kcmil				
			230	60	4	#2 - 600 kcmil	4	4/0 ~ 500 kcmil		
			380	60	2	#2 - 600 kcmil	2	#1 ~ 500 kcmil	3	#2 ~ 600 kcmil
			400	50	2	#2 - 600 kcmil	2	#1 ~ 500 kcmil	3	#2 ~ 600 kcmil
			460	60	2	#2 - 600 kcmil	2	#1 ~ 500 kcmil	3	#2 ~ 600 kcmil
			575	60	2	#2 - 600 kcmil	2	#1 ~ 500 kcmil	2	#2 ~ 600 kcmil
016	5	B	200	60	4	#1/0 ~ 700 kcmil				
			230	60	4	#2 - 600 kcmil	4	4/0 ~ 500 kcmil		
			380	60	2	#2 - 600 kcmil	2	#1 ~ 500 kcmil	3	#2 ~ 600 kcmil
			400	50	2	#2 - 600 kcmil	2	#1 ~ 500 kcmil	3	#2 ~ 600 kcmil
			460	60	2	#2 - 600 kcmil	2	#1 ~ 500 kcmil	3	#2 ~ 600 kcmil
			575	60	2	#2 - 600 kcmil	2	#1 ~ 500 kcmil	2	#2 ~ 600 kcmil
017	8	C	200	60	4	#1/0 ~ 700 kcmil				
			230	60	4	#2 - 600 kcmil	4	4/0 ~ 500 kcmil		
			380	60	2	#2 - 600 kcmil	2	#1 ~ 500 kcmil	3	#2 ~ 600 kcmil
			400	50	2	#2 - 600 kcmil	2	#1 ~ 500 kcmil	3	#2 ~ 600 kcmil
			460	60	2	#2 - 600 kcmil	2	#1 ~ 500 kcmil	3	#2 ~ 600 kcmil
			575	60	2	#2 - 600 kcmil	2	#1 ~ 500 kcmil	2	#2 ~ 600 kcmil
018	3	A	200	60	4	#1/0 ~ 700 kcmil				
			230	60	4	#2 - 600 kcmil	4	4/0 ~ 500 kcmil		
			380	60	3	#2 - 600 kcmil	3	3/0 ~ 400 kcmil	3	#2 ~ 600 kcmil
			400	50	3	#2 - 600 kcmil	3	3/0 ~ 400 kcmil	3	#2 ~ 600 kcmil
			460	60	2	#2 - 600 kcmil	2	#1 ~ 500 kcmil	3	#2 ~ 600 kcmil
			575	60	2	#2 - 600 kcmil	2	#1 ~ 500 kcmil	2	#2 ~ 600 kcmil
019	5	A	200	60	4	#1/0 ~ 700 kcmil				
			230	60	4	#2 - 600 kcmil	4	4/0 ~ 500 kcmil		
			380	60	3	#2 - 600 kcmil	3	3/0 ~ 400 kcmil	3	#2 ~ 600 kcmil
			400	50	3	#2 - 600 kcmil	3	3/0 ~ 400 kcmil	3	#2 ~ 600 kcmil
			460	60	2	#2 - 600 kcmil	2	#1 ~ 500 kcmil	3	#2 ~ 600 kcmil
			575	60	2	#2 - 600 kcmil	2	#1 ~ 500 kcmil	2	#2 ~ 600 kcmil
019	8	B	200	60	4	#1/0 ~ 700 kcmil				
			230	60	4	#2 - 600 kcmil	4	4/0 ~ 500 kcmil		
			380	60	3	#2 - 600 kcmil	3	3/0 ~ 400 kcmil	3	#2 ~ 600 kcmil
			400	50	3	#2 - 600 kcmil	3	3/0 ~ 400 kcmil	3	#2 ~ 600 kcmil
			460	60	2	#2 - 600 kcmil	2	#1 ~ 500 kcmil	3	#2 ~ 600 kcmil
			575	60	2	#2 - 600 kcmil	2	#1 ~ 500 kcmil	2	#2 ~ 600 kcmil
020	0	C	200	60	4	#1/0 ~ 700 kcmil				
			230	60	4	#2 - 600 kcmil	4	4/0 ~ 500 kcmil		
			380	60	3	#2 - 600 kcmil	3	3/0 ~ 400 kcmil	3	#2 ~ 600 kcmil
			400	50	3	#2 - 600 kcmil	3	3/0 ~ 400 kcmil	3	#2 ~ 600 kcmil
			460	60	3	#2 - 600 kcmil	3	3/0 ~ 400 kcmil	3	#2 ~ 600 kcmil
			575	60	2	#2 - 600 kcmil	2	#1 ~ 500 kcmil	2	#2 ~ 600 kcmil
021	3	A	200	60	4	#1/0 ~ 700 kcmil				
			230	60	4	#2 - 600 kcmil	4	4/0 ~ 500 kcmil		
			380	60	3	#2 - 600 kcmil	3	3/0 ~ 400 kcmil	3	#2 ~ 600 kcmil
			400	50	3	#2 - 600 kcmil	3	3/0 ~ 400 kcmil	3	#2 ~ 600 kcmil
			460	60	2	#2 - 600 kcmil	2	#1 ~ 500 kcmil	3	#2 ~ 600 kcmil
			575	60	2	#2 - 600 kcmil	2	#1 ~ 500 kcmil	2	#2 ~ 600 kcmil
021	5	C	200	60	4	#1/0 ~ 700 kcmil				
			230	60	4	#2 - 600 kcmil	4	4/0 ~ 500 kcmil		
			380	60	3	#2 - 600 kcmil	3	3/0 ~ 400 kcmil	3	#2 ~ 600 kcmil
			400	50	3	#2 - 600 kcmil	3	3/0 ~ 400 kcmil	3	#2 ~ 600 kcmil
			460	60	2	#2 - 600 kcmil	2	#1 ~ 500 kcmil	3	#2 ~ 600 kcmil
			575	60	2	#2 - 600 kcmil	2	#1 ~ 500 kcmil	2	#2 ~ 600 kcmil

© 2025 Johnson Controls. All rights reserved.

Table 4 - Electrical lug data (cont'd)

Field wiring lugs					Standard and ultra quiet condenser fans					
					Terminal block		Circuit breaker		Non-fused disconnect switch	
YVAA model			Input volts	Input freq	Wires per phase	Lug wire range	Wires per phase	Lug wire range	Wires per phase	Lug wire range
Frame	Cond	Evap								
Single point wiring										
021	8	C	200	60	4	#2 - 600 kcmil				
			230	60	4	#2 - 600 kcmil	4	4/0 ~ 500 kcmil		
			380	60	2	#2 - 600 kcmil	2	#1 ~ 500 kcmil	3	#2 ~ 600 kcmil
			400	50	2	#2 - 600 kcmil	2	#1 ~ 500 kcmil	3	#2 ~ 600 kcmil
			460	60	2	#2 - 600 kcmil	2	#1 ~ 500 kcmil	2	#2 - 600 kcmil
			575	60	2	#2 - 600 kcmil	2	#1 ~ 500 kcmil	2	#2 ~ 600 kcmil
023	3	B	200	60	4	#2 - 600 kcmil				
			230	60	4	#2 - 600 kcmil	4	4/0 ~ 500 kcmil		
			380	60	3	#2 - 600 kcmil	3	3/0 ~ 400 kcmil	3	#2 ~ 600 kcmil
			400	50	3	#2 - 600 kcmil	3	3/0 ~ 400 kcmil	3	#2 ~ 600 kcmil
			460	60	2	#2 - 600 kcmil	2	#1 ~ 500 kcmil	3	#2 ~ 600 kcmil
			575	60	2	#2 - 600 kcmil	2	#1 ~ 500 kcmil	2	#2 ~ 600 kcmil
024	5	C	200	60	4	#2 - 600 kcmil				
			230	60	4	#2 - 600 kcmil	4	4/0 ~ 500 kcmil		
			380	60	3	#2 - 600 kcmil	3	3/0 ~ 400 kcmil	3	#2 ~ 600 kcmil
			400	50	3	#2 - 600 kcmil	3	3/0 ~ 400 kcmil	3	#2 ~ 600 kcmil
			460	60	2	#2 - 600 kcmil	2	#1 ~ 500 kcmil	3	#2 ~ 600 kcmil
			575	60	2	#2 - 600 kcmil	2	#1 ~ 500 kcmil	2	#2 ~ 600 kcmil
024	8	C	200	60	4	#2 - 600 kcmil				
			230	60	4	#2 - 600 kcmil	4	4/0 ~ 500 kcmil		
			380	60	3	#2 - 600 kcmil	3	3/0 ~ 400 kcmil	3	#2 ~ 600 kcmil
			400	50	3	#2 - 600 kcmil	3	3/0 ~ 400 kcmil	3	#2 ~ 600 kcmil
			460	60	2	#2 - 600 kcmil	2	#1 ~ 500 kcmil	3	#2 ~ 600 kcmil
			575	60	2	#2 - 600 kcmil	2	#1 ~ 500 kcmil	2	#2 ~ 600 kcmil
026	3	B	200	60	4	#2 - 600 kcmil				
			230	60	4	#2 - 600 kcmil	4	4/0 ~ 500 kcmil		
			380	60	3	#2 - 600 kcmil	3	3/0 ~ 400 kcmil	3	#2 ~ 600 kcmil
			400	50	3	#2 - 600 kcmil	3	3/0 ~ 400 kcmil	3	#2 ~ 600 kcmil
			460	60	2	#2 - 600 kcmil	2	#1 ~ 500 kcmil	3	#2 ~ 600 kcmil
			575	60	2	#2 - 600 kcmil	2	#1 ~ 500 kcmil	2	#2 ~ 600 kcmil
027	0	D	200	60	4	#2 - 600 kcmil				
			230	60	4	#2 - 600 kcmil	4	4/0 ~ 500 kcmil		
			380	60	3	#2 - 600 kcmil	3	3/0 ~ 400 kcmil	3	#2 ~ 600 kcmil
			400	50	3	#2 - 600 kcmil	3	3/0 ~ 400 kcmil	3	#2 ~ 600 kcmil
			460	60	2	#2 - 600 kcmil	2	#1 ~ 500 kcmil	3	#2 ~ 600 kcmil
			575	60	2	#2 - 600 kcmil	2	#1 ~ 500 kcmil	2	#2 ~ 600 kcmil
027	3	D	200	60	4	#2 - 600 kcmil				
			230	60	4	#2 - 600 kcmil	4	4/0 ~ 500 kcmil		
			380	60	3	#2 - 600 kcmil	3	3/0 ~ 400 kcmil	3	#2 ~ 600 kcmil
			400	50	3	#2 - 600 kcmil	3	3/0 ~ 400 kcmil	3	#2 ~ 600 kcmil
			460	60	2	#2 - 600 kcmil	2	#1 ~ 500 kcmil	3	#2 ~ 600 kcmil
			575	60	2	#2 - 600 kcmil	2	#1 ~ 500 kcmil	2	#2 ~ 600 kcmil
027	5	E	200	60	4	#2 - 600 kcmil				
			230	60	4	#2 - 600 kcmil	4	4/0 ~ 500 kcmil		
			380	60	3	#2 - 600 kcmil	3	3/0 ~ 400 kcmil	3	#2 ~ 600 kcmil
			400	50	3	#2 - 600 kcmil	3	3/0 ~ 400 kcmil	3	#2 ~ 600 kcmil
			460	60	2	#2 - 600 kcmil	2	#1 ~ 500 kcmil	3	#2 ~ 600 kcmil
			575	60	2	#2 - 600 kcmil	2	#1 ~ 500 kcmil	2	#2 ~ 600 kcmil
027	8	E	200	60	4	#2 - 600 kcmil				
			230	60	4	#2 - 600 kcmil	4	4/0 ~ 500 kcmil		
			380	60	3	#2 - 600 kcmil	3	3/0 ~ 400 kcmil	3	#2 ~ 600 kcmil
			400	50	3	#2 - 600 kcmil	3	3/0 ~ 400 kcmil	3	#2 ~ 600 kcmil
			460	60	2	#2 - 600 kcmil	2	#1 ~ 500 kcmil	3	#2 ~ 600 kcmil
			575	60	2	#2 - 600 kcmil	2	#1 ~ 500 kcmil	2	#2 ~ 600 kcmil

© 2025 Johnson Controls. All rights reserved.

Table 4 - Electrical lug data (cont'd)

Field wiring lugs					High airflow/high static condenser fans					
					Terminal block		Circuit breaker		Non-fused disconnect switch	
YVAA model			Input volts	Input freq	Wires per phase	Lug wire range	Wires per phase	Lug wire range	Wires per phase	Lug wire range
Frame	Cond	Evap								
Single point wiring										
021	8	C	200	60	4	#1/0 ~ 700 kcmil				
			230	60	4	#2 - 600 kcmil	4	4/0 ~ 500 kcmil		
			380	60	3	#2 - 600 kcmil	3	3/0 ~ 400 kcmil	3	#2 ~ 600 kcmil
			400	50	3	#2 - 600 kcmil	3	3/0 ~ 400 kcmil	3	#2 ~ 600 kcmil
			460	60	2	#2 - 600 kcmil	2	#1 ~ 500 kcmil	3	#2 ~ 600 kcmil
			575	60	2	#2 - 600 kcmil	2	#1 ~ 500 kcmil	2	#2 ~ 600 kcmil
023	3	B	200	60	4	#1/0 ~ 700 kcmil				
			230	60	4	#2 - 600 kcmil	4	4/0 ~ 500 kcmil		
			380	60	3	#2 - 600 kcmil	3	3/0 ~ 400 kcmil	3	#2 ~ 600 kcmil
			400	50	3	#2 - 600 kcmil	3	3/0 ~ 400 kcmil	3	#2 ~ 600 kcmil
			460	60	3	#2 - 600 kcmil	3	3/0 ~ 400 kcmil	3	#2 ~ 600 kcmil
			575	60	2	#2 - 600 kcmil	2	#1 - 500 kcmil	2	#2 ~ 600 kcmil
024	5	C	200	60	4	#1/0 ~ 700 kcmil				
			230	60	4	#2 - 600 kcmil	4	4/0 ~ 500 kcmil		
			380	60	3	#2 - 600 kcmil	3	3/0 ~ 400 kcmil	3	#2 ~ 600 kcmil
			400	50	3	#2 - 600 kcmil	3	3/0 ~ 400 kcmil	3	#2 ~ 600 kcmil
			460	60	3	#2 - 600 kcmil	3	3/0 ~ 400 kcmil	3	#2 ~ 600 kcmil
			575	60	2	#2 - 600 kcmil	2	#1 - 500 kcmil	2	#2 ~ 600 kcmil
024	8	C	200	60	4	#1/0 ~ 700 kcmil				
			230	60	4	#2 - 600 kcmil	4	4/0 ~ 500 kcmil		
			380	60	3	#2 - 600 kcmil	3	3/0 ~ 400 kcmil	3	#2 ~ 600 kcmil
			400	50	3	#2 - 600 kcmil	3	3/0 ~ 400 kcmil	3	#2 ~ 600 kcmil
			460	60	3	#2 - 600 kcmil	3	3/0 ~ 400 kcmil	3	#2 ~ 600 kcmil
			575	60	2	#2 - 600 kcmil	2	#1 - 500 kcmil	2	#2 ~ 600 kcmil
026	3	B	200	60	4	#1/0 ~ 700 kcmil				
			230	60	4	#2 - 600 kcmil	4	4/0 ~ 500 kcmil		
			380	60	3	#2 - 600 kcmil	3	3/0 ~ 400 kcmil	3	#2 ~ 600 kcmil
			400	50	3	#2 - 600 kcmil	3	3/0 ~ 400 kcmil	3	#2 ~ 600 kcmil
			460	60	3	#2 - 600 kcmil	3	3/0 ~ 400 kcmil	3	#2 ~ 600 kcmil
			575	60	2	#2 - 600 kcmil	2	#1 - 500 kcmil	2	#2 ~ 600 kcmil
027	0	D	200	60	4	#1/0 ~ 700 kcmil				
			230	60	4	#2 - 600 kcmil	4	4/0 ~ 500 kcmil		
			380	60	3	#2 - 600 kcmil	3	3/0 ~ 400 kcmil	3	#2 ~ 600 kcmil
			400	50	3	#2 - 600 kcmil	3	3/0 ~ 400 kcmil	3	#2 ~ 600 kcmil
			460	60	3	#2 - 600 kcmil	3	3/0 ~ 400 kcmil	3	#2 ~ 600 kcmil
			575	60	2	#2 - 600 kcmil	2	#1 ~ 500 kcmil	2	#2 ~ 600 kcmil
027	3	D	200	60	4	#1/0 ~ 700 kcmil				
			230	60	4	#2 - 600 kcmil	4	4/0 ~ 500 kcmil		
			380	60	3	#2 - 600 kcmil	3	3/0 ~ 400 kcmil	3	#2 ~ 600 kcmil
			400	50	3	#2 - 600 kcmil	3	3/0 ~ 400 kcmil	3	#2 ~ 600 kcmil
			460	60	3	#2 - 600 kcmil	3	3/0 ~ 400 kcmil	3	#2 ~ 600 kcmil
			575	60	2	#2 - 600 kcmil	2	#1 ~ 500 kcmil	2	#2 ~ 600 kcmil
027	5	E	200	60	4	#1/0 ~ 700 kcmil				
			230	60	4	#2 - 600 kcmil	4	4/0 ~ 500 kcmil		
			380	60	3	#2 - 600 kcmil	3	3/0 ~ 400 kcmil	3	#2 ~ 600 kcmil
			400	50	3	#2 - 600 kcmil	3	3/0 ~ 400 kcmil	3	#2 ~ 600 kcmil
			460	60	3	#2 - 600 kcmil	3	3/0 ~ 400 kcmil	3	#2 ~ 600 kcmil
			575	60	2	#2 - 600 kcmil	2	#1 - 500 kcmil	2	#2 ~ 600 kcmil
027	8	E	200	60	4	#1/0 ~ 700 kcmil				
			230	60	4	#2 - 600 kcmil	4	4/0 ~ 500 kcmil		
			380	60	3	#2 - 600 kcmil	3	3/0 ~ 400 kcmil	3	#2 ~ 600 kcmil
			400	50	3	#2 - 600 kcmil	3	3/0 ~ 400 kcmil	3	#2 ~ 600 kcmil
			460	60	3	#2 - 600 kcmil	3	3/0 ~ 400 kcmil	3	#2 ~ 600 kcmil
			575	60	2	#2 - 600 kcmil	2	#1 - 500 kcmil	2	#2 ~ 600 kcmil

© 2025 Johnson Controls. All rights reserved.

Table 4 - Electrical lug data (cont'd)

Field wiring lugs					Standard and ultra quiet condenser fans					
					Terminal block		Circuit breaker		Non-fused disconnect switch	
YVAA model			Input volts	Input freq	Wires per phase	Lug wire range	Wires per phase	Lug wire range	Wires per phase	Lug wire range
Frame	Cond	Evap								
single point wiring										
029	5	E	200	60						
			230	60						
			380	60	3	#2 - 600 kcmil	4	#4/0 ~ 500 kcmil	4*	#2 - 600 kcmil
			400	50	3	#2 - 600 kcmil	4	#4/0 ~ 500 kcmil	3	#2 ~ 600 kcmil
			460	60	3	#2 - 600 kcmil	3	#3/0 ~ 400 kcmil	3	#2 ~ 600 kcmil
			575	60	3	#2 - 600 kcmil	3	#3/0 ~ 400 kcmil	3	#2 ~ 600 kcmil
030	3	C	200	60						
			230	60						
			380	60	3	#2 - 600 kcmil	4	#4/0 ~ 500 kcmil	4*	#2 - 600 kcmil
			400	50	3	#2 - 600 kcmil	4	#4/0 ~ 500 kcmil	3	#2 ~ 600 kcmil
			460	60	3	#2 - 600 kcmil	3	#3/0 ~ 400 kcmil	3	#2 ~ 600 kcmil
			575	60	3	#2 - 600 kcmil	3	#3/0 ~ 400 kcmil	3	#2 ~ 600 kcmil
030	5	C	200	60						
			230	60						
			380	60	3	#2 - 600 kcmil	4	#4/0 ~ 500 kcmil	4*	#2 - 600 kcmil
			400	50	3	#2 - 600 kcmil	4	#4/0 ~ 500 kcmil	3	#2 ~ 600 kcmil
			460	60	3	#2 - 600 kcmil	3	#3/0 ~ 400 kcmil	3	#2 ~ 600 kcmil
			575	60	3	#2 - 600 kcmil	3	#3/0 ~ 400 kcmil	3	#2 ~ 600 kcmil
030	8	E	200	60						
			230	60						
			380	60	3	#2 - 600 kcmil	4	#4/0 ~ 500 kcmil	4*	#2 - 600 kcmil
			400	50	3	#2 - 600 kcmil	4	#4/0 ~ 500 kcmil	3	#2 ~ 600 kcmil
			460	60	3	#2 - 600 kcmil	3	#3/0 ~ 400 kcmil	3	#2 ~ 600 kcmil
			575	60	3	#2 - 600 kcmil	3	#3/0 ~ 400 kcmil	3	#2 ~ 600 kcmil
031	8	E	200	60						
			230	60						
			380	60	3	#2 - 600 kcmil	4	#4/0 ~ 500 kcmil	4*	#2 - 600 kcmil
			400	50	3	#2 - 600 kcmil	4	#4/0 ~ 500 kcmil	3	#2 ~ 600 kcmil
			460	60	3	#2 - 600 kcmil	3	#3/0 ~ 400 kcmil	3	#2 ~ 600 kcmil
			575	60	3	#2 - 600 kcmil	3	#3/0 ~ 400 kcmil	3	#2 ~ 600 kcmil
032	3	E	200	60						
			230	60						
			380	60	3	#2 - 600 kcmil	4	#4/0 ~ 500 kcmil	4*	#2 - 600 kcmil
			400	50	3	#2 - 600 kcmil	4	#4/0 ~ 500 kcmil	3	#2 ~ 600 kcmil
			460	60	3	#2 - 600 kcmil	3	#3/0 ~ 400 kcmil	3	#2 ~ 600 kcmil
			575	60	3	#2 - 600 kcmil	3	#3/0 ~ 400 kcmil	3	#2 ~ 600 kcmil
033	3	C	200	60						
			230	60						
			380	60	3	#2 - 600 kcmil	4	#4/0 ~ 500 kcmil	4*	#2 - 600 kcmil
			400	50	3	#2 - 600 kcmil	4	#4/0 ~ 500 kcmil	3	#2 ~ 600 kcmil
			460	60	3	#2 - 600 kcmil	3	#3/0 ~ 400 kcmil	3	#2 ~ 600 kcmil
			575	60	3	#2 - 600 kcmil	3	#3/0 ~ 400 kcmil	3	#2 ~ 600 kcmil
034	3	E	200	60						
			230	60						
			380	60	3	#2 - 600 kcmil	4	#4/0 ~ 500 kcmil	4*	#2 - 600 kcmil
			400	50	3	#2 - 600 kcmil	4	#4/0 ~ 500 kcmil	3	#2 ~ 600 kcmil
			460	60	3	#2 - 600 kcmil	3	#3/0 ~ 400 kcmil	3	#2 ~ 600 kcmil
			575	60	3	#2 - 600 kcmil	3	#3/0 ~ 400 kcmil	3	#2 ~ 600 kcmil
034	5	E	200	60						
			230	60						
			380	60	3	#2 - 600 kcmil	4	#4/0 ~ 500 kcmil	4*	#2 - 600 kcmil
			400	50	3	#2 - 600 kcmil	4	#4/0 ~ 500 kcmil	3	#2 ~ 600 kcmil
			460	60	3	#2 - 600 kcmil	3	#3/0 ~ 400 kcmil	3	#2 ~ 600 kcmil
			575	60	3	#2 - 600 kcmil	3	#3/0 ~ 400 kcmil	3	#2 ~ 600 kcmil

© 2025 Johnson Controls. All rights reserved.

Table 4 - Electrical lug data (cont'd)

Field wiring lugs					High airflow/high static condenser fans					
					Terminal block		Circuit breaker		Non-fused disconnect switch	
YVAA model			Input volts	Input freq	Wires per phase	Lug wire range	Wires per phase	Lug wire range	Wires per phase	Lug wire range
Frame	Cond	Evap								
Single point wiring										
029	5	E	200	60						
			230	60						
			380	60	4	#2 - 600 kcmil	4	#4/0 ~ 500 kcmil	4*	#2 - 600 kcmil
			400	50	4	#2 - 600 kcmil	4	#4/0 ~ 500 kcmil	4*	#2 - 600 kcmil
			460	60	3	#2 - 600 kcmil	4	#4/0 ~ 500 kcmil	3	#2 - 600 kcmil
			575	60	3	#2 - 600 kcmil	3	#3/0 ~ 400 kcmil	3	#2 - 600 kcmil
030	3	C	200	60						
			230	60						
			380	60	4	#2 - 600 kcmil	4	#4/0 ~ 500 kcmil	4*	#2 - 600 kcmil
			400	50	4	#2 - 600 kcmil	4	#4/0 ~ 500 kcmil	4*	#2 - 600 kcmil
			460	60	3	#2 - 600 kcmil	4	#4/0 ~ 500 kcmil	3	#2 - 600 kcmil
			575	60	3	#2 - 600 kcmil	3	#3/0 ~ 400 kcmil	3	#2 - 600 kcmil
030	5	C	200	60						
			230	60						
			380	60	4	#2 - 600 kcmil	4	#4/0 ~ 500 kcmil	4*	#2 - 600 kcmil
			400	50	4	#2 - 600 kcmil	4	#4/0 ~ 500 kcmil	4*	#2 - 600 kcmil
			460	60	3	#2 - 600 kcmil	4	#4/0 ~ 500 kcmil	3	#2 - 600 kcmil
			575	60	3	#2 - 600 kcmil	3	#3/0 ~ 400 kcmil	3	#2 - 600 kcmil
030	8	E	200	60						
			230	60						
			380	60	4	#2 - 600 kcmil	4	#4/0 ~ 500 kcmil	4*	#2 - 600 kcmil
			400	50	4	#2 - 600 kcmil	4	#4/0 ~ 500 kcmil	4*	#2 - 600 kcmil
			460	60	3	#2 - 600 kcmil	4	#4/0 ~ 500 kcmil	3	#2 - 600 kcmil
			575	60	3	#2 - 600 kcmil	3	#3/0 ~ 400 kcmil	3	#2 - 600 kcmil
031	8	E	200	60						
			230	60						
			380	60	4	#2 - 600 kcmil	4	#4/0 ~ 500 kcmil	4*	#2 - 600 kcmil
			400	50	4	#2 - 600 kcmil	4	#4/0 ~ 500 kcmil	4*	#2 - 600 kcmil
			460	60	3	#2 - 600 kcmil	4	#4/0 ~ 500 kcmil	3	#2 - 600 kcmil
			575	60	3	#2 - 600 kcmil	3	#3/0 ~ 400 kcmil	3	#2 - 600 kcmil
032	3	E	200	60						
			230	60						
			380	60	4	#2 - 600 kcmil	4	#4/0 ~ 500 kcmil	4*	#2 - 600 kcmil
			400	50	4	#2 - 600 kcmil	4	#4/0 ~ 500 kcmil	4*	#2 - 600 kcmil
			460	60	3	#2 - 600 kcmil	4	#4/0 ~ 500 kcmil	3	#2 - 600 kcmil
			575	60	3	#2 - 600 kcmil	3	#3/0 ~ 400 kcmil	3	#2 - 600 kcmil
033	3	C	200	60						
			230	60						
			380	60	4	#2 - 600 kcmil	4	#4/0 ~ 500 kcmil	4*	#2 - 600 kcmil
			400	50	4	#2 - 600 kcmil	4	#4/0 ~ 500 kcmil	4*	#2 - 600 kcmil
			460	60	3	#2 - 600 kcmil	4	#4/0 ~ 500 kcmil	3	#2 - 600 kcmil
			575	60	3	#2 - 600 kcmil	3	#3/0 ~ 400 kcmil	3	#2 - 600 kcmil
034	3	E	200	60						
			230	60						
			380	60	4	#2 - 600 kcmil	4	#4/0 ~ 500 kcmil	4*	#2 - 600 kcmil
			400	50	4	#2 - 600 kcmil	4	#4/0 ~ 500 kcmil	4*	#2 - 600 kcmil
			460	60	3	#2 - 600 kcmil	4	#4/0 ~ 500 kcmil	3	#2 - 600 kcmil
			575	60	3	#2 - 600 kcmil	3	#3/0 ~ 400 kcmil	3	#2 - 600 kcmil
034	5	E	200	60						
			230	60						
			380	60	4	#2 - 600 kcmil	4	#4/0 ~ 500 kcmil	4*	#2 - 600 kcmil
			400	50	4	#2 - 600 kcmil	4	#4/0 ~ 500 kcmil	4*	#2 - 600 kcmil
			460	60	3	#2 - 600 kcmil	4	#4/0 ~ 500 kcmil	3	#2 - 600 kcmil
			575	60	3	#2 - 600 kcmil	3	#3/0 ~ 400 kcmil	3	#2 - 600 kcmil

© 2025 Johnson Controls. All rights reserved.

Table 4 - Electrical lug data (cont'd)

Field wiring lugs					Standard and ultra quiet condenser fans					
					Terminal block		Circuit breaker		Non-fused disconnect switch	
YVAA model			Input volts	Input freq	Wires per phase	Lug wire range	Wires per phase	Lug wire range	Wires per phase	Lug wire range
Frame	Cond	Evap								
Single point wiring										
036	8	J	200	60						
			230	60						
			380	60	4	#2 - 600 kcmil	4	#4/0 - 500 kcmil	4	#4/0 - 500 kcmil
			400	50	4	#2 - 600 kcmil	4	#4/0 - 500 kcmil	4	#4/0 - 500 kcmil
			460	60	4	#2 - 600 kcmil	4	#4/0 - 500 kcmil	4	#4/0 - 500 kcmil
			575	60	3	#2 - 600 kcmil	3	#3/0 - 400 kcmil	4	#2 - 600 kcmil
037	3	F	200	60						
			230	60						
			380	60	4	#2 - 600 kcmil	4	#4/0 - 500 kcmil	4	#4/0 - 500 kcmil
			400	50	4	#2 - 600 kcmil	4	#4/0 - 500 kcmil	4	#4/0 - 500 kcmil
			460	60	4	#2 - 600 kcmil	4	#4/0 - 500 kcmil	4	#4/0 - 500 kcmil
			575	60	3	#2 - 600 kcmil	3	#3/0 - 400 kcmil	4	#2 - 600 kcmil
037	5	I	200	60						
			230	60						
			380	60	4	#2 - 600 kcmil	4	#4/0 - 500 kcmil	4	#4/0 - 500 kcmil
			400	50	4	#2 - 600 kcmil	4	#4/0 - 500 kcmil	4	#4/0 - 500 kcmil
			460	60	4	#2 - 600 kcmil	4	#4/0 - 500 kcmil	4	#4/0 - 500 kcmil
			575	60	3	#2 - 600 kcmil	3	#3/0 - 400 kcmil	4	#2 - 600 kcmil

Field wiring lugs					High airflow/high static condenser fans					
					Terminal block		Circuit breaker		Non-fused disconnect switch	
YVAA model			Input volts	Input freq	Wires per phase	Lug wire range	Wires per phase	Lug wire range	Wires per phase	Lug wire range
Frame	Cond	Evap								
Single point wiring										
036	8	J	200	60						
			230	60						
			380	60	4	#2 - 600 kcmil	4	#4/0 - 500 kcmil	4	#4/0 - 500 kcmil
			400	50	4	#2 - 600 kcmil	4	#4/0 - 500 kcmil	4	#4/0 - 500 kcmil
			460	60	4	#2 - 600 kcmil	4	#4/0 - 500 kcmil	4	#4/0 - 500 kcmil
			575	60	3	#2 - 600 kcmil	4	#4/0 - 500 kcmil	4	#2 - 600 kcmil
037	3	F	200	60						
			230	60						
			380	60	4	#2 - 600 kcmil	4	#4/0 - 500 kcmil	4	#4/0 - 500 kcmil
			400	50	4	#2 - 600 kcmil	4	#4/0 - 500 kcmil	4	#4/0 - 500 kcmil
			460	60	4	#2 - 600 kcmil	4	#4/0 - 500 kcmil	4	#4/0 - 500 kcmil
			575	60	3	#2 - 600 kcmil	4	#4/0 - 500 kcmil	4	#2 - 600 kcmil
037	5	I	200	60						
			230	60						
			380	60	4	#2 - 600 kcmil	4	#4/0 - 500 kcmil	4	#4/0 - 500 kcmil
			400	50	4	#2 - 600 kcmil	4	#4/0 - 500 kcmil	4	#4/0 - 500 kcmil
			460	60	4	#2 - 600 kcmil	4	#4/0 - 500 kcmil	4	#4/0 - 500 kcmil
			575	60	3	#2 - 600 kcmil	4	#4/0 - 500 kcmil	4	#2 - 600 kcmil

© 2025 Johnson Controls. All rights reserved.

Table 4 - Electrical lug data (cont'd)

Field wiring lugs					Standard and ultra quiet condenser fans					
					Terminal block		Circuit breaker		Non-fused disconnect switch	
YVAA model			Input volts	Input freq.	Wires per phase	Lug wire range	Wires per phase	Lug wire range	Wires per phase	Lug wire range
Frame	Cond	Evap								
Dual point wiring										
039	8	J	200	60						
			230	60						
			380	60	3	#2 - 600 kcmil	3	#3/0 ~ 400 kcmil	3	#3/0 ~ 400 kcmil
			400	50	3	#2 - 600 kcmil	3	#3/0 ~ 400 kcmil	3	#3/0 ~ 400 kcmil
			460	60	2	#2 - 600 kcmil	2	#1 ~ 500 kcmil	2	#1 ~ 500 kcmil
			575	60	2	#2 - 600 kcmil	2	#1 ~ 500 kcmil	2	#1 ~ 500 kcmil
041	3	H	200	60						
			230	60						
			380	60	3	#2 - 600 kcmil	3	#3/0 ~ 400 kcmil	3	#3/0 ~ 400 kcmil
			400	50	3	#2 - 600 kcmil	3	#3/0 ~ 400 kcmil	3	#3/0 ~ 400 kcmil
			460	60	2	#2 - 600 kcmil	2	#1 ~ 500 kcmil	2	#1 ~ 500 kcmil
			575	60	2	#2 - 600 kcmil	2	#1 ~ 500 kcmil	2	#1 ~ 500 kcmil
042	5	H	200	60						
			230	60						
			380	60	3	#2 - 600 kcmil	3	#3/0 ~ 400 kcmil	3	#3/0 ~ 400 kcmil
			400	50	3	#2 - 600 kcmil	3	#3/0 ~ 400 kcmil	3	#3/0 ~ 400 kcmil
			460	60	2	#2 - 600 kcmil	2	#1 ~ 500 kcmil	2	#1 ~ 500 kcmil
			575	60	2	#2 - 600 kcmil	2	#1 ~ 500 kcmil	2	#1 ~ 500 kcmil
042	8	J	200	60						
			230	60						
			380	60	3	#2 - 600 kcmil	3	#3/0 ~ 400 kcmil	3	#3/0 ~ 400 kcmil
			400	50	3	#2 - 600 kcmil	3	#3/0 ~ 400 kcmil	3	#3/0 ~ 400 kcmil
			460	60	2	#2 - 600 kcmil	2	#1 ~ 500 kcmil	2	#1 ~ 500 kcmil
			575	60	2	#2 - 600 kcmil	2	#1 ~ 500 kcmil	2	#1 ~ 500 kcmil
044	3	G	200	60						
			230	60						
			380	60	3	#2 - 600 kcmil	3	#3/0 ~ 400 kcmil	3	#3/0 ~ 400 kcmil
			400	50	3	#2 - 600 kcmil	3	#3/0 ~ 400 kcmil	3	#3/0 ~ 400 kcmil
			460	60	2	#2 - 600 kcmil	2	#1 ~ 500 kcmil	2	#1 ~ 500 kcmil
			575	60	2	#2 - 600 kcmil	2	#1 ~ 500 kcmil	2	#1 ~ 500 kcmil
047	5	J	200	60						
			230	60						
			380	60	3	#2 - 600 kcmil	3	#3/0 ~ 400 kcmil	3	#3/0 ~ 400 kcmil
			400	50	3	#2 - 600 kcmil	3	#3/0 ~ 400 kcmil	3	#3/0 ~ 400 kcmil
			460	60	2	#2 - 600 kcmil	2	#1 ~ 500 kcmil	2	#1 ~ 500 kcmil
			575	60	2	#2 - 600 kcmil	2	#1 ~ 500 kcmil	2	#1 ~ 500 kcmil

© 2025 Johnson Controls. All rights reserved.

Table 4 - Electrical lug data (cont'd)

Field wiring lugs					High airflow/High static condenser fans					
					Terminal block		Circuit breaker		Non-fused disconnect switch	
YVAA model			Input volts	Input freq.	Wires per phase	Lug wire range	Wires per phase	Lug wire range	Wires per phase	Lug wire range
Frame	Cond	Evap								
Dual point wiring										
039	8	J	200	60						
			230	60						
			380	60	3	#2 - 600 kcmil	3	#3/0 ~ 400 kcmil	3	#3/0 ~ 400 kcmil
			400	50	3	#2 - 600 kcmil	3	#3/0 ~ 400 kcmil	3	#3/0 ~ 400 kcmil
			460	60	2	#2 - 600 kcmil	3	#3/0 ~ 400 kcmil	3	#3/0 ~ 400 kcmil
			575	60	2	#2 - 600 kcmil	2	#1 ~ 500 kcmil	2	#1 ~ 500 kcmil
041	3	H	200	60						
			230	60						
			380	60	3	#2 - 600 kcmil	3	#3/0 ~ 400 kcmil	3	#3/0 ~ 400 kcmil
			400	50	3	#2 - 600 kcmil	3	#3/0 ~ 400 kcmil	3	#3/0 ~ 400 kcmil
			460	60	2	#2 - 600 kcmil	3	#3/0 ~ 400 kcmil	3	#3/0 ~ 400 kcmil
			575	60	2	#2 - 600 kcmil	2	#1 ~ 500 kcmil	2	#1 ~ 500 kcmil
042	5	H	200	60						
			230	60						
			380	60	3	#2 - 600 kcmil	3	#3/0 ~ 400 kcmil	3	#3/0 ~ 400 kcmil
			400	50	3	#2 - 600 kcmil	3	#3/0 ~ 400 kcmil	3	#3/0 ~ 400 kcmil
			460	60	2	#2 - 600 kcmil	3	#3/0 ~ 400 kcmil	3	#3/0 ~ 400 kcmil
			575	60	2	#2 - 600 kcmil	2	#1 ~ 500 kcmil	2	#1 ~ 500 kcmil
042	8	J	200	60						
			230	60						
			380	60	3	#2 - 600 kcmil	3	#3/0 ~ 400 kcmil	3	#3/0 ~ 400 kcmil
			400	50	3	#2 - 600 kcmil	3	#3/0 ~ 400 kcmil	3	#3/0 ~ 400 kcmil
			460	60	2	#2 - 600 kcmil	3	#3/0 ~ 400 kcmil	3	#3/0 ~ 400 kcmil
			575	60	2	#2 - 600 kcmil	2	#1 ~ 500 kcmil	2	#1 ~ 500 kcmil
044	3	G	200	60						
			230	60						
			380	60	3	#2 - 600 kcmil	3	#3/0 ~ 400 kcmil	3	#3/0 ~ 400 kcmil
			400	50	3	#2 - 600 kcmil	3	#3/0 ~ 400 kcmil	3	#3/0 ~ 400 kcmil
			460	60	2	#2 - 600 kcmil	3	#3/0 ~ 400 kcmil	3	#3/0 ~ 400 kcmil
			575	60	2	#2 - 600 kcmil	2	#1 ~ 500 kcmil	2	#1 ~ 500 kcmil
047	5	J	200	60						
			230	60						
			380	60	3	#2 - 600 kcmil	3	#3/0 ~ 400 kcmil	3	#3/0 ~ 400 kcmil
			400	50	3	#2 - 600 kcmil	3	#3/0 ~ 400 kcmil	3	#3/0 ~ 400 kcmil
			460	60	2	#2 - 600 kcmil	3	#3/0 ~ 400 kcmil	3	#3/0 ~ 400 kcmil
			575	60	2	#2 - 600 kcmil	2	#1 ~ 500 kcmil	2	#1 ~ 500 kcmil

© 2025 Johnson Controls. All rights reserved.

Table 4 - Electrical lug data (cont'd)

Field wiring lugs					Standard and ultra quiet condenser fans					
					Terminal block		Circuit breaker		Non-fused disconnect switch	
YVAA model			Input volts	Input freq.	Wires per phase	Lug wire range	Wires per phase	Lug wire range	Wires per phase	Lug wire range
Frame	Cond	Evap								
Dual point wiring										
048	3	G	200	60						
			230	60						
			380	60	3	#2 - 600 kcmil	3	#3/0 ~ 400 kcmil	3	#3/0 ~ 400 kcmil
			400	50	3	#2 - 600 kcmil	3	#3/0 ~ 400 kcmil	3	#3/0 ~ 400 kcmil
			460	60	2	#2 - 600 kcmil	2	#1 ~ 500 kcmil	2	#1 ~ 500 kcmil
			575	60	2	#2 - 600 kcmil	2	#1 ~ 500 kcmil	2	#1 ~ 500 kcmil
049	0	K	200	60						
			230	60						
			380	60	3	#2 - 600 kcmil	3	#3/0 ~ 400 kcmil	3	#3/0 ~ 400 kcmil
			400	50	3	#2 - 600 kcmil	3	#3/0 ~ 400 kcmil	3	#3/0 ~ 400 kcmil
			460	60	2	#2 - 600 kcmil	2	#1 ~ 500 kcmil	2	#1 ~ 500 kcmil
			575	60	2	#2 - 600 kcmil	2	#1 ~ 500 kcmil	2	#1 ~ 500 kcmil
050	0	J	200	60						
			230	60						
			380	60	3	#2 - 600 kcmil	3	#3/0 ~ 400 kcmil	3	#3/0 ~ 400 kcmil
			400	50	3	#2 - 600 kcmil	3	#3/0 ~ 400 kcmil	3	#3/0 ~ 400 kcmil
			460	60	2	#2 - 600 kcmil	2	#1 ~ 500 kcmil	2	#1 ~ 500 kcmil
			575	60	2	#2 - 600 kcmil	2	#1 ~ 500 kcmil	2	#1 ~ 500 kcmil
052	3	J	200	60						
			230	60						
			380	60	3	#2 - 600 kcmil	3	#3/0 ~ 400 kcmil	3	#3/0 ~ 400 kcmil
			400	50	3	#2 - 600 kcmil	3	#3/0 ~ 400 kcmil	3	#3/0 ~ 400 kcmil
			460	60	2	#2 - 600 kcmil	2	#1 ~ 500 kcmil	2	#1 ~ 500 kcmil
			575	60	2	#2 - 600 kcmil	2	#1 ~ 500 kcmil	2	#1 ~ 500 kcmil

© 2025 Johnson Controls. All rights reserved.

Table 4 - Electrical lug data (cont'd)

Field wiring lugs					High airflow/high static condenser fans					
					Terminal block		Circuit breaker		Non-fused disconnect switch	
YVAA model			Input volts	Input freq.	Wires per phase	Lug wire range	Wires per phase	Lug wire range	Wires per phase	Lug wire range
Frame	Cond	Evap								
Dual point wiring										
048	3	G	200	60						
			230	60						
			380	60	3	#2 - 600 kcmil	3	#3/0 ~ 400 kcmil	3	#3/0 ~ 400 kcmil
			400	50	3	#2 - 600 kcmil	3	#3/0 ~ 400 kcmil	3	#3/0 ~ 400 kcmil
			460	60	2	#2 - 600 kcmil	3	#3/0 ~ 400 kcmil	3	#3/0 ~ 400 kcmil
			575	60	2	#2 - 600 kcmil	2	#1 ~ 500 kcmil	2	#1 ~ 500 kcmil
049	0	k	200	60						
			230	60						
			380	60	3	#2 - 600 kcmil	3	#3/0 ~ 400 kcmil	3	#3/0 ~ 400 kcmil
			400	50	3	#2 - 600 kcmil	3	#3/0 ~ 400 kcmil	3	#3/0 ~ 400 kcmil
			460	60	2	#2 - 600 kcmil	2	#1 ~ 500 kcmil	3	#3/0 ~ 400 kcmil
			575	60	2	#2 - 600 kcmil	2	#1 ~ 500 kcmil	2	#1 ~ 500 kcmil
050	0	J	200	60						
			230	60						
			380	60	3	#2 - 600 kcmil	3	#3/0 ~ 400 kcmil	3	#3/0 ~ 400 kcmil
			400	50	3	#2 - 600 kcmil	3	#3/0 ~ 400 kcmil	3	#3/0 ~ 400 kcmil
			460	60	2	#2 - 600 kcmil	3	#3/0 ~ 400 kcmil	3	#3/0 ~ 400 kcmil
			575	60	2	#2 - 600 kcmil	2	#1 ~ 500 kcmil	2	#1 ~ 500 kcmil
052	3	J	200	60						
			230	60						
			380	60	3	#2 - 600 kcmil	3	#3/0 ~ 400 kcmil	3	#3/0 ~ 400 kcmil
			400	50	3	#2 - 600 kcmil	3	#3/0 ~ 400 kcmil	3	#3/0 ~ 400 kcmil
			460	60	2	#2 - 600 kcmil	3	#3/0 ~ 400 kcmil	3	#3/0 ~ 400 kcmil
			575	60	2	#2 - 600 kcmil	2	#1 ~ 500 kcmil	2	#1 ~ 500 kcmil

Field wiring lugs					Terminal block		Terminal block with independent system circuit breakers		Terminal block with independent system non-fused disconnect switches	
Single point wiring										
YVAA model			Input volts	Input freq.	Wires per phase	Lug wire range	Wires per phase	Lug wire range	Wires per phase	Lug wire range
Frame	Cond	Evap								
Models 0368 to 0523			200	60						
			230	60						
			380	60	4	#1 - 750 kcmil	4	#1 - 750 kcmil	4	#1 - 750 kcmil
			400	50	4	#1 - 750 kcmil	4	#1 - 750 kcmil	4	#1 - 750 kcmil
			460	60	4	#1 - 750 kcmil	4	#1 - 750 kcmil	4	#1 - 750 kcmil
			575	60	4	#1 - 750 kcmil	4	#1 - 750 kcmil	4	#1 - 750 kcmil

© 2025 Johnson Controls. All rights reserved.

© 2025 Johnson Controls. All rights reserved.

Section 5: Technical data

The data shown within the tables of this chapter, are applicable to selected typical configurations. Other configurations are available through our configuration and selection software.

Contact your nearest Johnson Controls Sales Office for the chiller configuration that best matches your specific needs.

© 2025 Johnson Controls. All rights reserved.

Table 5 - Physical data - Microchannel coil

Unit frame	15	16	17	18	19	19	20	21	21	21
Condenser code	**3**	**5**	**8**	**3**	**5**	**8**	**0**	**3**	**5**	**8**
Evaporator code	**B**	**B**	**C**	**A**	**A**	**B**	**C**	**A**	**C**	**C**
General unit data										
Number of Independent Refrigerant Circuits	2									
Refrigerant Charge, R-134a, R-513A, Ckt.-1/ Ckt.-2, lb (kg)	175/175 (79/79)	190/190 (86/86)	225/225 (102/102)	175/155 (79/70)	190/170 (86/77)	220/195 (100/88)	205/205 (93/93)	175/175 (79/79)	225/225 (102/102)	240/240 (109/109)
Oil Charge, Ckt.-1/Ckt.-2, gal (L)	2.1/2.0 (8.0/ 7.7)	2.2/2.2 (8.5/ 8.5)	2.5/2.5 (9.3/ 9.3)	2.4/2.0 (9.2/ 7.7)	2.6/2.1 (9.7/ 8.0)	2.7/2.2 (10.4/ 8.5)	2.6/2.6 (10.0/ 10.0)	2.5/2.5 (9.3/ 9.3)	2.8/2.8 (10.5/ 10.5)	2.9/2.9 (10.8/ 10.8)
Minimum Load, %	10									
Unit shipping weight, lb (kg) [1]	11518 (5224)	12084 (5481)	14668 (6653)	12019 (5452)	12781 (5797)	13776 (6248)	13392 (6074)	12859 (5833)	14915 (6765)	15677 (7111)
Operating Weight, lb (kg) [1]	11979 (5434)	12546 (5691)	15432 (7000)	12460 (5652)	13222 (5997)	14237 (6458)	14155 (6421)	13300 (6033)	15678 (7111)	16440 (7457)
Chassis Dimensions - Length, in. (mm)	203.3 (5164)	247.2 (6279)	291.2 (7396)	247 (6274)	291.2 (7397)	335.2 (8514)	226 (5740)	291.2 (7397)	291.2 (7396)	335.2 (8514)
Chassis Dimensions - Width, in. (mm)	88.3 (2243)	88.3 (2243)	88.3 (2243)	88.3 (2243)	88.3 (2243)	88.3 (2243)	88.3 (2243)	88.3 (2243)	88.3 (2243)	88.3 (2243)
Chassis Dimensions - Height, in. (mm)	94.6 (2403)	94.6 (2403)	94.6 (2403)	94.6 (2403)	94.6 (2403)	94.6 (2403)	94.6 (2403)	94.6 (2403)	94.6 (2403)	94.6 (2403)
Compressors, semi-hermetic screw										
Quantity in each chiller	2									
Condenser fans										
Number Ckt-1/Ckt-2	4/4	5/5	6/6	6/4	7/5	8/6	4/4	6/6	6/6	7/7
Air on Condenser (Min/Max), °F (°C)	0/131 (-17.8/55)									
Evaporator, shell and tube hybrid falling film [2]										
Water Volume, gal (L)	58 (220)	58 (220)	71 (269)	48 (182)	48 (182)	58 (220)	71 (269)	48 (182)	71 (269)	71(269)
Leaving Water Temperature (Min/Max), °F (°C) 3	40/60 (4.4/15.6)									
Maximum Water Side Pressure, psig (barg)	150 (10.3)									
Maximum Refrigerant Side Pressure, psig (barg)	235 (16.2)									
Evap Drain Connection, in.	3/4									
Minimum Chilled Water Flow Rate, gpm (L/s)	250 (15.8)	250 (15.8)	300 (18.9)	200 (12.6)	200 (12.6)	250 (15.8)	300 (18.9)	200 (12.6)	300 (18.9)	300 (18.9)
Maximum Chilled Water Flow Rate, gpm (L/s)	950 (59.9)	950 (59.9)	1150 (72.6)	750 (47.3)	750 (47.3)	950 (59.9)	1150 (72.6)	750 (47.3)	1150 (72.6)	1150 (72.6)
Inlet and Outlet Water Connections, in.	6	6	6	6	6	6	6	6	6	6

Notes:
1. Shipping and operating weights shown are for base unit; selected options may add weight to unit. Contact your nearest Johnson Controls Sales office for weight data.
2. For leaving liquid temperature below 40°F (4.4°C) or above 60°F (15.6°C), contact your nearest Johnson Controls Sales Office for application requirements.

© 2025 Johnson Controls. All rights reserved.

Table 5 - Physical data - Microchannel coil (cont'd)

Unit frame	23	24	24	26	27	27	27	27	29	30
Condenser code	**3**	**5**	**8**	**3**	**0**	**3**	**5**	**8**	**5**	**3**
Evaporator code	**B**	**C**	**C**	**B**	**D**	**D**	**E**	**E**	**E**	**C**
General unit data										
Number of Independent Refrigerant Circuits	2									
Refrigerant Charge, R-134a, R-513A, Ckt.-1/Ckt.-2, lb (kg)	210/190 (95/86)	240/225 (109/102)	240/250 (109/113)	210/210 (95/95)	250/250 (114/114)	265/265 (120/120)	265/265 (120/120)	270/270 (122/122)	310/265 (141/120)	290/235 (132/107)
Oil Charge, Ckt.-1/ Ckt.-2, gal (L)	2.7/2.6 (10.1/ 9.7)	2.9/2.8 (11.1/ 10.5)	2.9/2.9 (11.1/ 11.1)	2.7/2.7 (10.1/ 10.1)	3.0/3.0 (11.4/ 11.4)	3.0/3.0 (11.4/ 11.4)	3.0/3.0 (11.4/ 11.4)	3.1/3.1 (11.6/ 11.6)	3.8/3.1 (14.4/ 11.7)	3.7/3.0 (14.0/ 11.4)
Minimum Load, %	10									
Unit shipping weight, lb (kg) [1]	13288 (6027)	15873 (7200)	16634 (7545)	14076 (6385)	16476 (7473)	16275 (7382)	16991 (7707)	17753 (8052)	18205 (8258)	17114 (7763)
Operating Weight, lb (kg) [1]	13750 (6237)	16636 (7546)	17398 (7891)	14538 (6594)	17304 (7849)	17103 (7758)	17851 (8097)	18612 (8442)	19065 (8648)	17877 (8109)
Chassis Dimensions - Length, in. (mm)	291.2 (7396)	335.2 (8514)	379.1 (9629)	335.2 (8514)	291.2 (7396)	335.2 (8514)	335.2 (8514)	379.2 (9632)	379.2 (9632)	379.2 (9632)
Chassis Dimensions - Width, in. (mm)	88.3 (2243)	88.3 (2243)	88.3 (2243)	88.3 (2243)	88.3 (2242)	88.3 (2243)	88.3 (2243)	88.3 (2243)	88.3 (2243)	88.3 (2243)
Chassis Dimensions - Height, in. (mm)	94.6 (2403)	94.6 (2403)	94.6 (2403)	94.6 (2403)	94.6 (2403)	94.6 (2403)	94.6 (2403)	94.6 (2403)	94.6 (2403)	94.6 (2403)
Compressors, semi-hermetic screw										
Qty per Chiller	2									
Condenser fans										
Number Ckt-1/Ckt-2	7/5	8/6	8/8	7/7	6/6	7/7	7/7	8/8	9/7	9/7
Air on Condenser (Min/Max), °F (°C)	0/131 (-17.8/55)									
Evaporator, shell and tube hybrid falling film [2]										
Water Volume, gal (L)	58(220)	71(269)	71(269)	58(220)	82(310)	82(310)	113(428)	113(428)	113(428)	71(269)
Leaving Water Temperature (Min/ Max), °F (°C) 3	40/60 (4.4/15.6)									
Maximum Water Side Pressure, psig (barg)	150 (10.3)									
Maximum Refrigerant Side Pressure, psig (barg)	235 (16.2)									
Evap Drain Connection, in.	3/4									
Minimum Chilled Water Flow Rate, gpm (L/s)	250 (15.8)	300 (18.9)	300 (18.9)	250 (15.8)	300 (18.9)	300 (18.9)	400 (25.2)	400 (25.2)	400 (25.2)	300 (18.9)
Maximum Chilled Water Flow Rate, gpm (L/s)	950 (59.9)	1150 (72.6)	1150 (72.6)	950 (59.9)	1150 (72.6)	1150 (72.6)	1500 (94.7)	1500 (94.7)	1500 (94.7)	1150 (72.6)
Inlet and Outlet Water Connections, in.	6	6	6	6	6	6	8	8	8	6

Notes:

1. Shipping and operating weights shown are for base unit; selected options may add weight to unit. Contact your nearest Johnson Controls Sales office for weight data.
2. For leaving liquid temperature below 40°F (4.4°C) or above 60°F (15.6°C), contact your nearest Johnson Controls Sales Office for application requirements.

© 2025 Johnson Controls. All rights reserved.

Table 5 - Physical data - Microchannel coil (cont'd)

Unit frame	30	30	31	32	33	34	34	36	37
Condenser code	**5**	**8**	**8**	**3**	**3**	**3**	**5**	**8**	**3**
Evaporator code	**C**	**E**	**E**	**E**	**C**	**E**	**E**	**J**	**F**
General unit data									
Number of Independent Refrigerant Circuits	2								
Refrigerant Charge, R-134a, or R-513A, Ckt.-1/Ckt.-2, lb (kg)	295/240 (134/109)	315/275 (143/125)	315/295 (143/134)	295/295 (134/134)	290/290 (132/132)	310/310 (141/141)	315/315 (143/143)	435/320 (197/145)	380/245 (172/111)
Oil Charge, Ckt.-1/Ckt.-2, gal (L)	3.7/3.0 (14.0/ 11.4)	3.9/3.2 (14.8/ 12.1)	3.9/3.3 (14.8/ 12.5)	3.7/3.7 (14.0/ 14.0)	3.7/3.7 (14.0/ 14.0)	3.8/3.8 (14.4/ 14.4)	3.9/3.9 (14.8/ 14.8)	4.1/4.0 (15.5/ 15.1)	4.0/2.9 (15.1/ 11.0)
Minimum Load, %	10								
Unit shipping weight, lb (kg) [1]	17875 (8108)	18967 (8603)	19728 (8948)	18554 (8416)	18224 (8266)	19315 (8761)	20077 (9107)	24831 (11263)	22346 (10136)
Operating Weight, lb (kg) [1]	18638 (8454)	19827 (8993)	20588 (9339)	19414 (8806)	18987 (8612)	20175 (9151)	20937 (9497)	26188 (11879)	23405 (10616)
Chassis Dimensions - Length, in. (mm)	423.1 (10750)	423.1 (10750)	467.1 (11860)	379.2 (9632)	423.1 (10750)	423.1 (10750)	467.1 (11860)	511.3 (12990)	467.1 (11860)
Chassis Dimensions - Width, in. (mm)	88.3 (2243)	88.3 (2243)	88.3 (2243)	88.3 (2243)	88.3 (2243)	88.3 (2243)	88.3 (2243)	88.3 (2243)	88.3 (2243)
Chassis Dimensions - Height, in. (mm)	94.6 (2403)	94.6 (2403)	94.6 (2403)	94.6 (2403)	94.6 (2403)	94.6 (2403)	94.6 (2403)	94.7 (2405)	94.7 (2405)
Compressors, semi-hermetic screw									
Quantity in each chiller	2								
Condenser fans									
Number Ckt-1/Ckt-2	10/8	10/8	10/10	8/8	9/9	9/9	10/10	14/8	13/7
Air on Condenser (Min/Max), °F (°C)	0/125 (-17.8/51.7)								
Evaporator, shell and tube hybrid falling film [2]									
Water Volume, gal (L)	71 (269)	113 (428)	113 (428)	113 (428)	71 (269)	113 (428)	113 (428)	147 (556)	96 (363)
Leaving Water Temperature (Min/Max), °F (°C) [2]	40/60 (4.4/15.6)								
Maximum Water Side Pressure, psig (barg)	150 (10.3)								
Maximum Refrigerant Side Pressure, psig (barg)	235 (16.2)								
Evap Drain Connection, in.	3/4								
Minimum Chilled Water Flow Rate, gpm (L/s)	300 (18.9)	400 (25.2)	400 (25.2)	400 (25.2)	300 (18.9)	400 (25.2)	400 (25.2)	550 (34.1)	460 (29.0)
Maximum Chilled Water Flow Rate, gpm (L/s)	1150 (72.6)	1500 (94.7)	1500 (94.7)	1500 (94.7)	1150 (72.6)	1500 (94.7)	1500 (94.7)	1880 (118.1)	1540 (97.0)
Inlet and Outlet Water Connections, in.	6	8	8	8	6	8	8	8	8

Notes:
1. Shipping and operating weights shown are for base unit; selected options may add weight to unit. Contact your nearest Johnson Controls Sales office for weight data.
2. For leaving liquid temperature below 40°F (4.4°C) or above 60°F (15.6°C), contact your nearest Johnson Controls Sales Office for application requirements.

© 2025 Johnson Controls. All rights reserved.

Table 5 - Physical data - Microchannel coil (cont'd)

Unit frame	37	39	41	42	42	44	47	48	49	50	52
Condenser code	**5**	**8**	**3**	**5**	**8**	**3**	**5**	**3**	**0**	**0**	**3**
Evaporator code	**J**	**J**	**H**	**H**	**J**	**G**	**J**	**G**	**K**	**J**	**J**
General unit data											
Number of Independent Refrigerant Circuits	2										
Refrigerant Charge, R-134a, or R-513A, Ckt.-1/ Ckt.-2, lb (kg)	430/310 (195/140)	435/360 (197/163)	420/345 (191/156)	440/365 (200/166)	435/385 (197/175)	330/355 (150/161)	405/430 (184/195)	345/370 (156/168)	350/375 (159/170)	365/390 (166/177)	405/430 (184/195)
Oil Charge, Ckt.-1/Ckt.-2, gal (L)	4.1/3.8 (15.5/ 14.4)	4.1/4.1 (15.5/ 15.5)	4.0/4.0 (15.1/ 15.1)	4.1/4.1 (15.5/ 15.5)	4.1/4.1 (15.5/ 15.5)	4.0/4.0 (15.1/ 15.1)	4.2/4.2 (15.9/ 15.9)	4.0/4.0 (15.1/ 15.1)	4.0/4.0 (15.1/ 15.1)	4.0/4.0 (15.1/ 15.1)	4.2/4.2 (15.9/ 15.9)
Minimum Load, %	10										
Unit shipping weight, lb (kg) [1]	24070 (10918)	25941 (11767)	21242 (9635)	22765 (10326)	26703 (12112)	25942 (11767)	28427 (12894)	26704 (12113)	24762 (11232)	25968 (11779)	28427 (12894)
Operating Weight, lb (kg) [1]	25426 (11533)	27298 (12382)	22049 (10001)	23572 (10692)	28060 (12728)	27001 (12247)	29784 (13510)	27763 (12593)	25847 (11724)	27325 (12394)	29784 (13510)
Chassis Dimensions - Length, in. (mm)	467.1 (11860)	555.3 (14100)	467.1 (11860)	555.3 (14100)	599.3 (15220)	555.3 (14100)	599.3 (15220)	599.3 (15220)	467.1 (11864)	467.1 (11865)	599.3 (15220)
Chassis Dimensions - Width, in. (mm)	88.3 (2243)	88.3 (2243)	88.3 (2243)	88.3 (2243)	88.3 (2242)	88.3 (2243)	88.3 (2243)	88.4 (2245)	88.3 (2243)	88.3 (2243)	88.3 (2243)
Chassis Dimensions - Height, in. (mm)	94.7 (2405)	94.7 (2405)	94.7 (2405)	94.7 (2405)	94.7 (2405)	94.7 (2405)	94.7 (2405)	94.7 (2405)	94.6 (2403)	94.7 (2405)	94.7 (2405)
Compressors, semi-hermetic screw											
Quantity in each chiller	2										
Condenser fans											
Number Ckt-1/Ckt-2	13/7	14/10	12/8	14/10	14/12	12/12	13/13	13/13	10/10	10/10	13/13
Air on Condenser (Min/Max), °F (°C)	0/125										
Evaporator, shell and tube hybrid falling film [2]											
Water Volume, gal (L)	147(556)	147(556)	130(492)	130(492)	147(556)	96(363)	147(556)	96(363)	130 (492)	147(556)	147(556)
Leaving Water Temperature (Min/Max), °F (°C) [2]	40/60 (4.4/15.6)										
Maximum Water Side Pressure, psig (barg)	150 (10.3)										
Maximum Refrigerant Side Pressure, psig (barg)	235 (16.2)										
Evap Drain Connection, in.	3/4										
Minimum Chilled Water Flow Rate, gpm (L/s)	550 (34.1)	550 (34.1)	520 (33.0)	520 (33.0)	550 (34.1)	460 (29.0)	550 (34.1)	460 (29.0)	470 (30)	550 (34.1)	550 (34.1)
Maximum Chilled Water Flow Rate, gpm (L/s)	1880 (118.1)	1880 (118.1)	1700 (107.0)	1700 (107.0)	1880 (118.1)	1540 (97.0)	1880 (118.1)	1540 (97.0)	1870 (118)	1880 (118.1)	1880 (118.1)
Inlet and Outlet Water Connections, in.	8	8	8	8	8	8	8	8	8	8	8

Notes:

1. Shipping and operating weights shown are for base unit; selected options may add weight to unit. Contact your nearest Johnson Controls Sales office for weight data.
2. For leaving liquid temperature below 40°F (4.4°C) or above 60°F (15.6°C), contact your nearest Johnson Controls Sales Office for application requirements.

© 2025 Johnson Controls. All rights reserved.

Table 6 - Physical data - Round tube coil

Unit frame	15	18	20	21	23	26	27	27	30
Condenser code	**3**	**3**	**0**	**3**	**3**	**3**	**0**	**3**	**3**
Evaporator code	**B**	**A**	**C**	**A**	**B**	**B**	**D**	**D**	**C**
General unit data									
Number of Independent Refrigerant Circuits	2								
Refrigerant Charge, R-134a, Ckt.-1/Ckt.-2, lb (kg)	211/211 (96/96)	229/191 (104/87)	241/241 (109/109)	229/229 (104/104)	273/235 (124/107)	273/273 (124/124)	304/304 (138/138)	328/328 (149/149)	371/308 (168/140)
Oil Charge, Ckt.-1/Ckt.-2, gal (L)	2.1/2.0 (8.0/7.7)	2.4/2.0 (9.2/7.7)	2.6/2.6 (9.9/9.9)	2.5/2.5 (9.5/9.5)	2.7/2.6 (10.3/9.9)	2.7/2.7 (10.3/10.3)	3.0/3.0 (11.4/11.4)	3.0/3.0 (11.4/11.4)	3.7/3.0 (14.0/11.4)
Minimum Load, %	10								
Unit shipping weight, Round Tube cond coils, lb (kg)[2]	12354 (5604)	13064 (5926)	14228 (6454)	14113 (6402)	14542 (6596)	15539 (7048)	16767 (7606)	17738 (8046)	18786 (8521)
Unit shipping weight, Round Tube with Copper Fin cond coils, lb (kg)[2]	13674 (6202)	14714 (6674)	15548 (7052)	16093 (7300)	16522 (7494)	17849 (8096)	19315 (8761)	20048 (9094)	21426 (9719)
Operating Weight, Round Tube cond coils, lb (kg) [2]	12815 (5813)	13505 (6126)	14991 (6800)	14554 (6602)	15004 (6806)	16001 (7258)	17596 (7981)	18566 (8421)	19549 (8867)
Operating Weight, Round Tube with Copper Fin cond coils, lb (kg) [2]	14135 (6412)	15155 (6874)	16311 (7399)	16534 (7500)	16984 (7704)	18311 (8306)	20143 (9137)	20876 (9469)	22189 (10065)
Chassis Dimensions - Length, in. (mm)	203.3 (5164)	247 (6274)	226 (5740)	291.2 (7397)	291.2 (7397)	335.2 (8514)	291.2 (7397)	335.2 (8514)	379.2 (9631)
Chassis Dimensions - Width, in. (mm)	88.3 (2243)	88.3 (2243)	88.3 (2243)	88.3 (2243)	88.3 (2243)	88.3 (2243)	88.3 (2243)	88.3 (2243)	88.3 (2243)
Chassis Dimensions - Height, in. (mm)	94.6 (2403)	94.6 (2403)	94.6 (2403)	94.6 (2403)	94.6 (2403)	94.6 (2403)	94.6 (2403)	94.6 (2403)	94.6 (2403)
Compressors, semi-hermetic screw									
Quantity in each Chiller	2								
Condenser fans									
Number Ckt-1/Ckt-2	4/4	6/4	4/4	6/6	7/5	7/7	6/6	7/7	9/7
Air on Condenser (Min/Max), °F (°C)	0/125 (-17.8/51.7)								
Evaporator, shell and tube hybrid falling film									
Water Volume, gal (L)	58 (220)	48 (182)	71 (269)	48 (182)	58 (220)	58 (220)	82 (310)	82 (310)	71 (269)
Leaving Water Temperature (Min/Max), °F (°C) [2]	40/60 (4.4/15.6)								
Maximum Water Side Pressure, psig (barg)	150 (10.3)								
Maximum Refrigerant Side Pressure, psig (barg)	235 (16.2)								
Evap Drain Connection, in.	3/4								
Minimum Chilled Water Flow Rate, gpm (L/s)	250 (15.8)	200 (12.6)	300 (18.9)	200 (12.6)	250 (15.8)	250 (15.8)	300 (18.9)	300 (18.9)	300 (18.9)
Maximum Chilled Water Flow Rate, gpm (L/s)	950 (59.9)	750 (47.3)	1150 (72.6)	750 (47.3)	950 (59.9)	950 (59.9)	1150 (72.6)	1150 (72.6)	1150 (72.6)
Inlet and Outlet Water Connections, in.	6	6	6	6	6	6	6	6	6

Notes:
Shipping and operating weights shown are for base unit; selected options may add weight to unit. Contact your nearest Johnson Controls Sales office for weight data.

1. R-513A is not an option.
2. For leaving liquid temperature below 40°F (4.4°C) or above 60°F (15.6°C), contact your nearest Johnson Controls Sales Office for application requirements.

© 2025 Johnson Controls. All rights reserved.

Table 6 - Physical data - Round tube coil (cont'd)

Unit frame	32	33	34	37	41	44	48	49	50	52
Condenser code	**3**	**3**	**3**	**3**	**3**	**3**	**3**	**0**	**0**	**3**
Evaporator code	**E**	**C**	**E**	**F**	**H**	**G**	**G**	**K**	**J**	**J**
General unit data										
Number of Independent Refrigerant Circuits	2									
Refrigerant Charge, R-134a, Ckt.-1/ Ckt.-2, lb (kg)	367/367 (166/166)	371/371 (168/168)	391/391 (177/177)	537/308 (244/140)	568/417 (258/189)	478/478 (217/217)	502/502 (228/228)	480/480 (218/218)	495/495 (224/224)	562/562 (255/255)
Oil Charge, Ckt.-1/Ckt.-2, gal (L)	3.7/3.7 (14.0/ 14.0)	3.7/3.7 (14.0/ 14.0)	3.8/3.8 (14.4/ 14.4)	4.0/2.9 (15.1/ 11.0)	4.0/4.0 (15.1/ 15.1)	4.0/4.0 (15.1/ 15.1)	4.0/4.0 (15.1/ 15.1)	4.0/4.0 (15.1/ 15.1)	4.0/4.0 (15.1/ 15.1)	4.2/4.2 (15.9/ 15.9)
Minimum Load, %	10									
Unit shipping weight, Round Tube cond coils, lb (kg)[2]	20226 (9174)	20105 (9119)	21196 (9614)	24436 (11084)	23332 (10583)	28450 (12905)	29421 (13345)	26852 (12180)	28058 (12727)	31144 (14127)
Unit shipping weight, Round Tube with Copper Fin cond coils, lb (kg)[2]	22866 (10372)	23075 (10467)	24166 (10962)	27736 (12581)	26632 (12080)	32410 (14701)	33711 (15291)	31098 (14106)	31358 (14224)	35434 (16073)
Operating Weight, Round Tube cond coils, lb (kg) [2]	21086 (9564)	20868 (9466)	22056 (10004)	25495 (11564)	24139 (10949)	29509 (13385)	30480 (13825)	27937 (12672)	29415 (13342)	32501 (14742)
Operating Weight, Round Tube with Copper Fin cond coils, lb (kg) [2]	23726 (10762)	23838 (10813)	25026 (11352)	28795 (13061)	27439 (12446)	33469 (15181)	34770 (15771)	32183 (14598)	32715 (14839)	36791 (16688)
Chassis Dimensions - Length, in. (mm)	379.2 (9632)	423.1 (10747)	423.1 (10747)	467.1 (11864)	467.1 (11864)	555.3 (14105)	599.3 (15222)	467.1 (11864)	467.1 (11864)	599.3 (15222)
Chassis Dimensions - Width, in. (mm)	88.3 (2243)	88.3 (2243)	88.3 (2243)	88.3 (2243)	88.3 (2243)	88.3 (2243)	88.4 (2245)	88.3 (2243)	88.4 (2244)	88.3 (2243)
Chassis Dimensions - Height, in. (mm)	94.6 (2403)	94.6 (2403)	94.6 (2403)	94.7 (2405)	94.7 (2405)	94.7 (2405)	94.7 (2405)	94.6 (2403)	94.7 (2405)	94.7 (2405)
Compressors, semi-hermetic screw										
Qty per Chiller	2									
Condenser fans										
Number Ckt-1/Ckt-2	8/8	9/9	9/9	13/7	12/8	12/12	13/13	10/10	10/10	13/13
Air on Condenser (Min/Max), °F (°C)	0/125 (-17.8/51.7)									
Evaporator, shell and tube hybrid falling film										
Water Volume, gal (L)	113 (428)	71 (269)	113 (428)	96 (363)	130 (492)	96 (363)	96 (363)	130 (492)	147 (556)	147 (556)
Leaving Water Temperature (Min/ Max), °F (°C) [2]	40/60 (4.4/15.6)									
Maximum Water Side Pressure, psig (barg)	150 (10.3)									
Maximum Refrigerant Side Pressure, psig (barg)	235 (16.2)									
Evap Drain Connection, in.	3/4									
Minimum Chilled Water Flow Rate, gpm (L/s)	400 (25.2)	300 (18.9)	400 (25.2)	460 (29.0)	520 (33.0)	460 (29.0)	460 (29.0)	470 (30)	550 (34.1)	550 (34.1)
Maximum Chilled Water Flow Rate, gpm (L/s)	1500 (94.7)	1150 (72.6)	1500 (94.7)	1540 (97.0)	1700 (107.0)	1540 (97.0)	1540 (97.0)	1870 (118)	1880 (118.1)	1880 (118.1)
Inlet and Outlet Water Connections, in	8	6	8	8	8	8	8	8	8	8

Notes:
Shipping and operating weights shown are for base unit; selected options may add weight to unit. Contact your nearest Johnson Controls Sales office for weight data.

1. R-513A is not an option.
2. For leaving liquid temperature below 40°F (4.4°C) or above 60°F (15.6°C), contact your nearest Johnson Controls Sales Office for application requirements.

© 2025 Johnson Controls. All rights reserved.

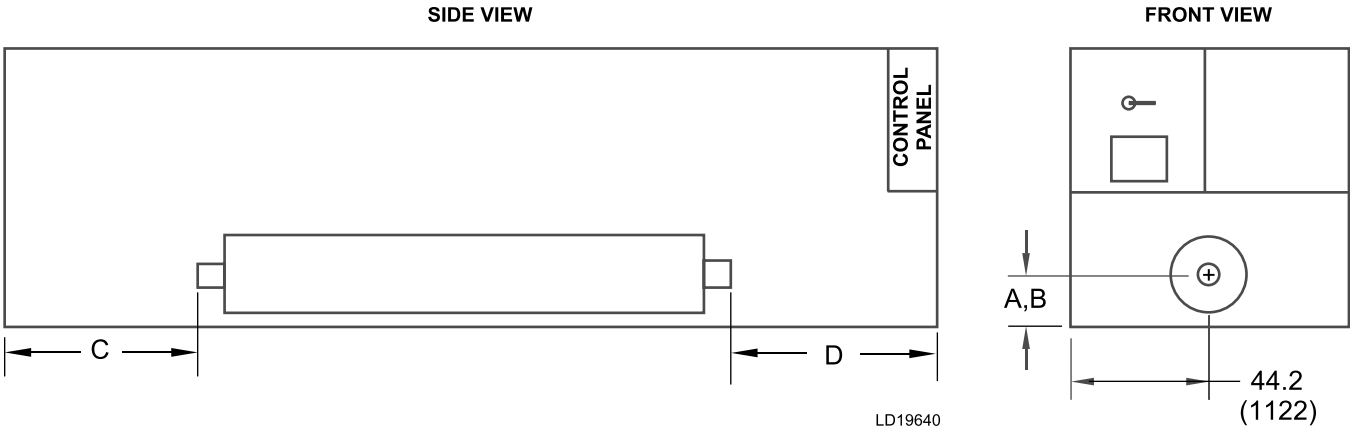

Table 7 - Optional one-pass evaporator

All dimensions - in. (mm)								
YVAA		A,B	c	d	e-nozzle size	Water volume gal (l)	Minimum chilled water flow rate GPM (l/s)	Maximum chilled water flow rate GPM (l/s)
Frame	Cond.							
15	**3**	20.8 (528)	6.8 (173)	34.5 (876)	8	58 (220)	500 (32)	1970 (124)
16	**5**	20.8 (528)	29.2 (742)	56.1 (1425)	8	58 (220)	500 (32)	1970 (124)
17	**8**	20.8 (528)	34.9 (886)	70 (1778)	8	71 (269)	590 (37)	2190 (138)
18	**3**	19.8 (503)	17.7 (450)	56.8 (1443)	6	48 (182)	400 (25)	1230 (77)
19	**5**	19.8 (503)	61.5 (1562)	56.7 (1440)	6	48 (182)	400 (25)	1230 (77)
19	**8**	21 (533)	117.3 (2979)	56.1 (1425)	8	58 (220)	500 (32)	1970 (124)
20	**0**	20.8 (528)	1.7 (43)	38.1 (968)	8	71 (269)	590 (37)	2190 (138)
21	**3**	19.8 (503)	61.7 (1567)	56.8 (1443)	6	48 (182)	400 (25)	1230 (77)
21	**5**	20.8 (528)	34.9 (886)	70 (1778)	8	71 (269)	590 (37)	2190 (138)
21	**8**	21 (533)	78.9 (2004)	70 (1778)	8	71 (269)	590 (37)	2190 (138)

Note: Minimum Chilled Water Flow Rate is for full load selections; Variable Primary Flow ratings as low as 50% of the minimum are permittted. Glycol limits are higher. Contact your Johnson Controls Sales Office for ratings and further information.

© 2025 Johnson Controls. All rights reserved.

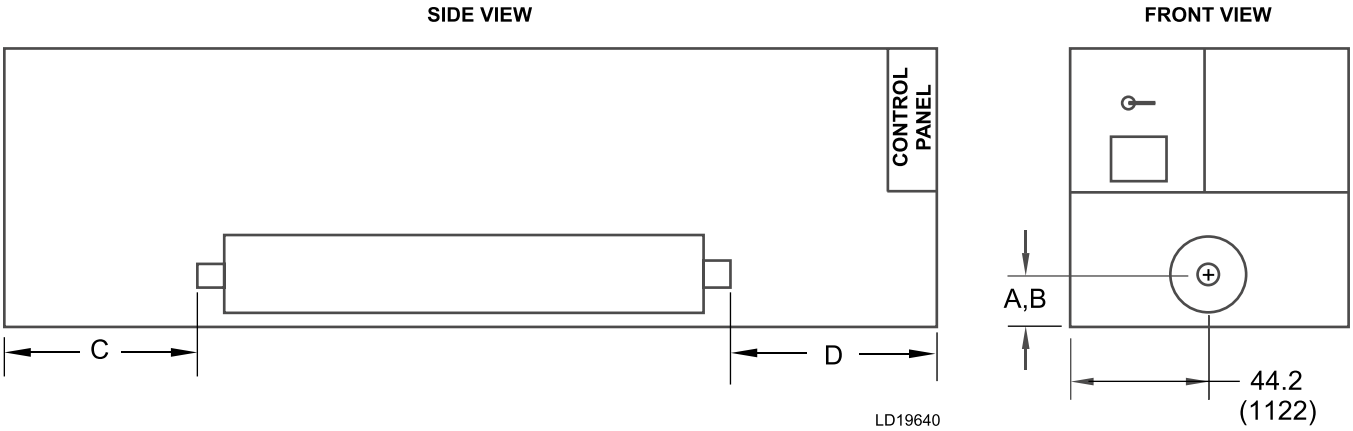

Table 7 - Optional one-pass evaporator (cont'd)

All dimensions - in. (mm)								
YVAA		A,B	c	d	e-nozzle size	Water volume gal (l)	Minimum chilled water flow rate GPM (l/s)	Maximum chilled water flow rate GPM (l/s)
Frame	Cond.							
23	**3**	20.8 (528)	73.2 (1859)	56.1 (1425)	8	58 (220)	500 (32)	1970 (124)
24	**5**	21 (533)	92.9 (2360)	56.1 (1425)	8	71 (269)	590 (37)	2190 (138)
24	**8**	21 (533)	122.9 (3122)	70 (1778)	8	71 (269)	590 (37)	2190 (138)
26	**3**	21 (533)	117.1 (2974)	56.1 (1425)	8	58 (220)	500 (32)	1970 (124)
27	**0**	21 (533)	16.8 (427)	51.9 (1318)	8	82 (310)	590 (37)	2190 (138)
27	**3**	21 (533)	42.9 (1090)	70 (1778)	8	82 (310)	590 (37)	2190 (138)
27	**5**	22.5 (572)	44.7 (1135)	71.8 (1824)	10	113 (428)	810 (51)	3200 (202)
27	**8**	22.5 (572)	88.3 (2243)	71.8 (1824)	10	113 (428)	810 (51)	3200 (202)
29	**5**	22.5 (572)	88.6 (2250)	71.8 (1824)	10	113 (428)	810 (51)	3200 (202)
30	**3**	21 (533)	122.9 (3122)	70 (1778)	8	71 (269)	590 (37)	2190 (138)

Note: Minimum Chilled Water Flow Rate is for full load selections; Variable Primary Flow ratings as low as 50% of the minimum are permittted. Glycol limits are higher. Contact your Johnson Controls Sales Office for ratings and further information.

© 2025 Johnson Controls. All rights reserved.

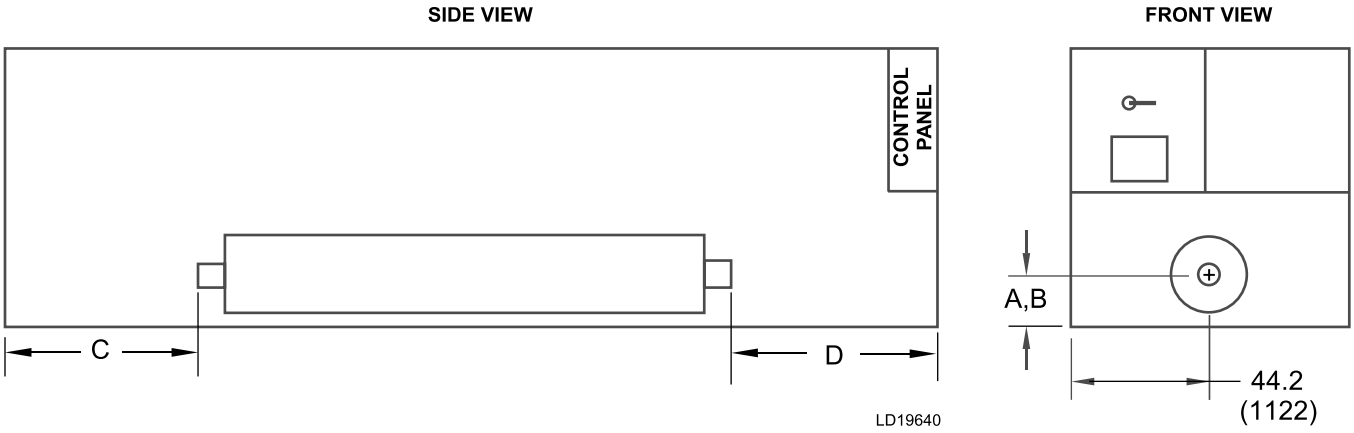

Table 7 - Optional one-pass evaporator (cont'd)

All dimensions - in. (mm)								
YVAA		A,B	c	d	e-nozzle size	Wwater volume gal (l)	Minimum chilled water flow rate GPM (l/s)	Maximum chilled water flow rate GPM (l/s)
Frame	Cond.							
30	**5**	21 (533)	166.9 (4239)	70 (1778)	8	71 (269)	590 (37)	2190 (138)
30	**8**	22.5 (572)	132.2 (3358)	71.8 (1824)	10	113 (428)	810 (51)	3200 (202)
31	**8**	22.5 (572)	176.6 (4486)	71.8 (1824)	10	113 (428)	810 (51)	3200 (202)
32	**3**	22.5 (572)	88.6 (2250)	71.8 (1824)	10	113 (428)	810 (51)	3200 (202)
33	**3**	21 (533)	166.9 (4239)	70 (1778)	8	71 (269)	590 (37)	2190 (138)
34	**3**	22.5 (572)	132.6 (3368)	71.8 (1824)	10	113 (428)	810 (51)	3200 (202)
34	**5**	22.5 (572)	176.21 (4476)	71.8 (1824)	10	113 (428)	810 (51)	3200 (202)
36	**8**	23.3 (592)	208.6 (5298)	83.5 (2121)	10	147 (556)	1090 (69)	3420 (215)
37	**3**	22.3 (566)	180.9 (4595)	112.2 (2850)	10	96 (363)	840 (53)	3320 (209)
37	**5**	23.3 (592)	164.3 (4173)	83.4 (2118)	10	147 (556)	1090 (69)	3420 (215)

Note: Minimum Chilled Water Flow Rate is for full load selections; Variable Primary Flow ratings as low as 50% of the minimum are permitted. Glycol limits are higher. Contact your Johnson Controls Sales Office for ratings and further information.

© 2025 Johnson Controls. All rights reserved.

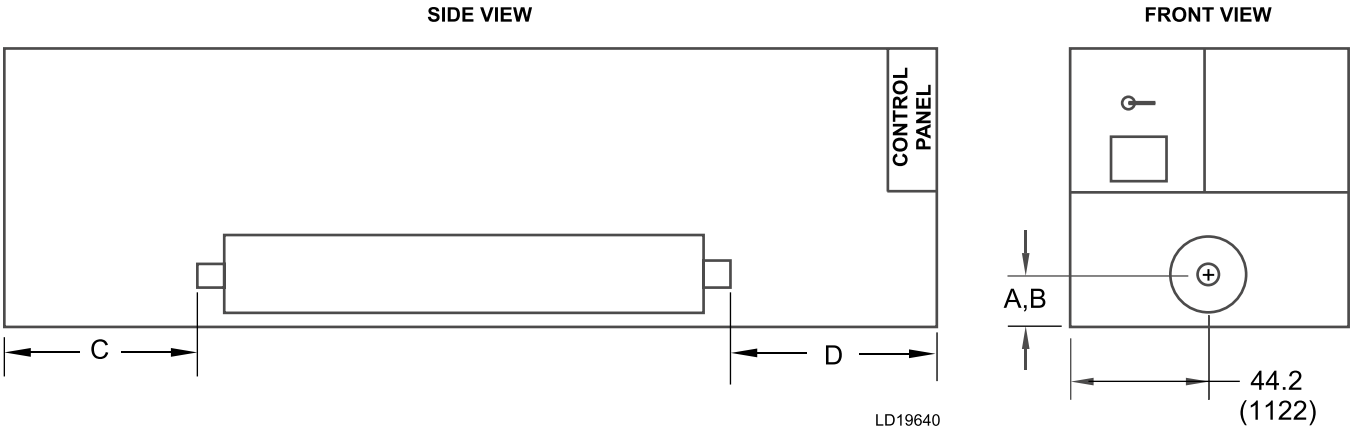

Table 7 - Optional one-pass evaporator (cont'd)

All dimensions - in. (mm)								
YVAA		A,B	c	d	e-nozzle size	Wwater volume gal (l)	Minimum chilled water flow rate GPM (l/s)	Maximum chilled water flow rate GPM (l/s)
Frame	Cond.							
39	**8**	23.3 (592)	252.5 (6414)	83.5 (2121)	10	147 (556)	1090 (69)	3420 (215)
41	**3**	22.5 (572)	164.6 (4181)	83.8 (2129)	10	130 (492)	940 (59)	3420 (215)
42	**5**	22.5 (572)	252.6 (6416)	83.8 (2129)	10	130 (492)	940 (59)	3420 (215)
42	**8**	23.3 (592)	296.5 (7531)	83.5 (2121)	10	147 (556)	1090 (69)	3420 (215)
44	**3**	22.3 (566)	287.1 (7292)	94.2 (2393)	10	96 (363)	840 (53)	3320 (209)
47	**5**	23.3 (592)	308.4 (7833)	71.5 (1816)	10	147 (556)	1090 (69)	3420 (215)
48	**3**	22.3 (566)	331.2 (8412)	94.2 (2393)	10	96 (363)	840 (53)	3320 (209)
49	**0**	22.5 (571)	176.5 (4482)	71.7 (1820)	10	130 (492)	940 (59)	3420 (215)
50	**0**	23.3 (592)	176.2 (4475)	71.5 (1816)	10	147 (556)	1090 (69)	3420 (215)
52	**3**	23.3 (592)	308.4 (7833)	71.5 (1816)	10	147 (556)	1090 (69)	3420 (215)

Note: Minimum Chilled Water Flow Rate is for full load selections; Variable Primary Flow ratings as low as 50% of the minimum are permitted. Glycol limits are higher. Contact your Johnson Controls Sales Office for ratings and further information.

© 2025 Johnson Controls. All rights reserved.

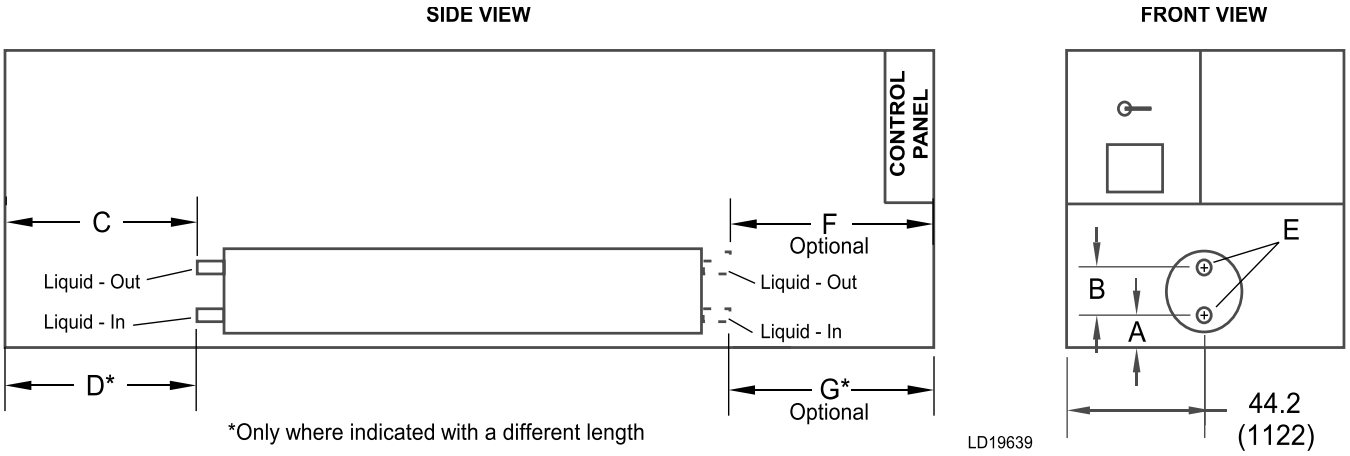

Table 8 - Standard two-pass, rear inlet/outlet evaporator

All dimensions - in. (mm)											
YVAA		A	B	C	D	e-nozzle size	f	g	Water volume gal (l)	Minimum chilled water flow rate GPM (l/s)	Maximum chilled water flow rate GPM (l/s)
Frame	Cond.										
15	**3**	15.1 (384)	11.4 (290)	6.8 (173)		6	34.5 (876)		58 (220)	250 (16)	980 (62)
16	**5**	15.1 (384)	11.4 (290)	29.4 (747)		6	56.1 (1425)		58 (220)	250 (16)	980 (62)
17	**8**	15.1 (384)	11.4 (290)	34.9 (886)		6	70 (1778)		71 (269)	300 (19)	1170 (74)
18	**3**	14.1 (358)	11.4 (290)	17.7 (450)		6	56.8 (1443)		48 (182)	200 (13)	790 (50)
19	**5**	14.1 (358)	11.4 (290)	61.5 (1562)		6	56.7 (1440)		48 (182)	200 (13)	790 (50)
19	**8**	15.3 (389)	11.4 (290)	117.3 (2979)		6	56.1 (1425)		58 (220)	250 (16)	980 (62)
20	**0**	15.1 (384)	11.4 (290)	1.7 (43)		6	38.1 (968)		71 (269)	300 (19)	1170 (74)
21	**3**	14.1 (358)	11.4 (290)	61.7 (1567)		6	58.8 (1494)		48 (182)	200 (13)	790 (50)
21	**5**	15.1 (384)	11.4 (290)	29.9 (759)		6	70 (1778)		71 (269)	300 (19)	1170 (74)
21	**8**	15.3 (389)	11.4 (290)	78.9 (2004)		6	70.3 (1786)		71 (269)	300 (19)	1170 (74)

Note: Minimum Chilled Water Flow Rate is for full load selections; Variable Primary Flow ratings as low as 50% of the minimum are permitted. Glycol limits are higher. Contact your Johnson Controls Sales Office for ratings and further information.

© 2025 Johnson Controls. All rights reserved.

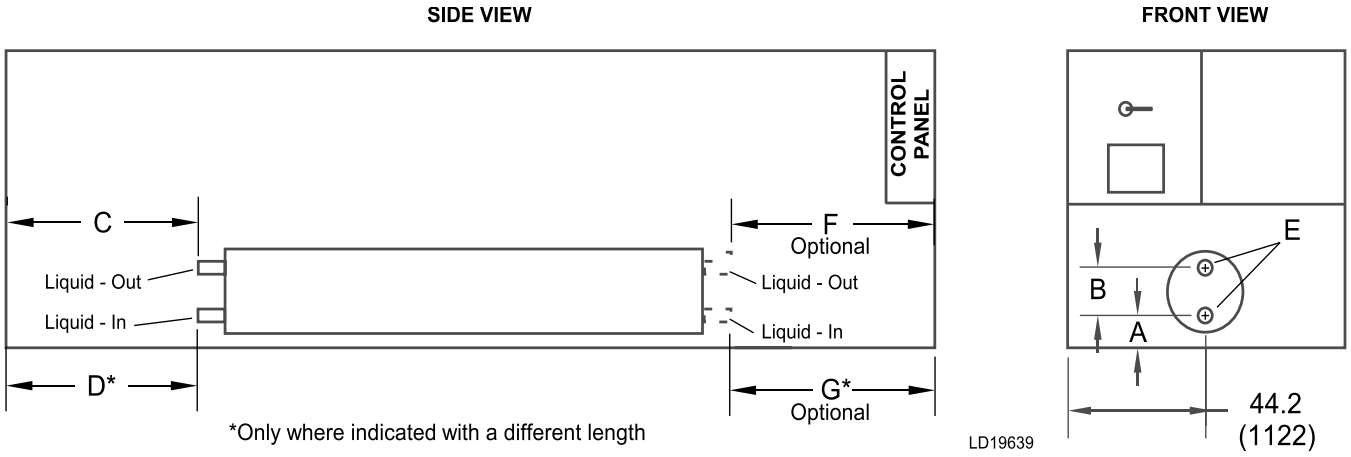

Table 8 - Standard two-pass, rear inlet/outlet evaporator (cont'd)

All dimensions - in. (mm)											
YVAA											
Frame	Cond.	A	B	C	D	e-nozzle size	f	g	Water volume gal (l)	Minimum chilled water flow rate GPM (l/s)	Maximum chilled water flow rate GPM (l/s)
23	**3**	15.1 (384)	11.4 (290)	73.3 (1862)		6	56.1 (1425)		58 (220)	250 (16)	980 (62)
24	**5**	15.3 (389)	11.4 (290)	29.9 (759)		6	56.1 (1425)		71 (269)	300 (19)	1170 (74)
24	**8**	15.3 (389)	11.4 (290)	122.9 (3122)		6	70 (1778)		71 (269)	300 (19)	1170 (74)
26	**3**	15.3 (389)	11.4 (290)	117.3 (2979)		6	56.1 (1425)		58 (220)	250 (16)	980 (62)
27	**0**	15.3 (388)	11.4 (290)	16.8 (427)		6	51.9 (1318)		82 (310)	300 (19)	1170 (74)
27	**3**	15.3 (389)	11.4 (290)	42.9 (1090)		6	70 (1778)		82 (310)	300 (19)	1170 (74)
27	**5**	15.5 (394)	14 (356)	44.3 (1125)		8	71.8 (1824)		113 (428)	410 (26)	1600 (101)
27	**8**	15 (381)	14 (356)	88.3 (2243)		8	71.8 (1824)		113 (428)	410 (26)	1600 (101)
29	**5**	15.5 (394)	14 (356)	88.3 (2243)		8	71.8 (1824)		113 (428)	410 (26)	1600 (101)
30	**3**	15.3 (389)	11.4 (290)	122.9 (3122)		6	70 (1778)		71 (269)	300 (19)	1170 (74)

Note: Minimum Chilled Water Flow Rate is for full load selections; Variable Primary Flow ratings as low as 50% of the minimum are permitted. Glycol limits are higher.Contact your Johnson Controls Sales Office for ratings and further information.

© 2025 Johnson Controls. All rights reserved.

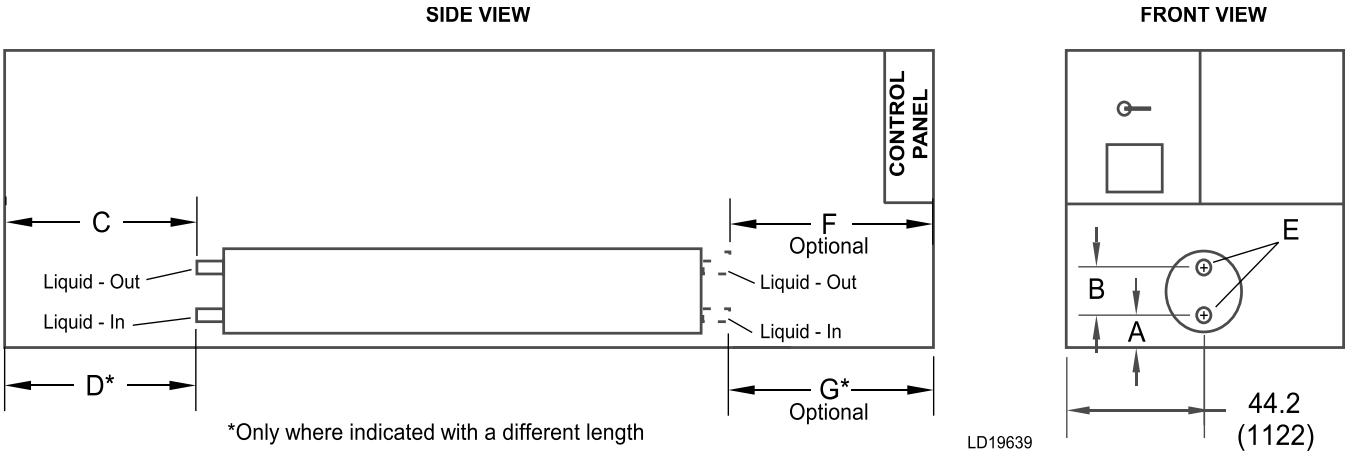

Table 8 - Standard two-pass, rear inlet/outlet evaporator (cont'd)

All dimensions - in. (mm)											
YVAA		A	B	C	D	e-nozzle size	f	g	Water volume gal (l)	Minimum chilled water flow rate GPM (l/s)	Maximum chilled water flow rate GPM (l/s)
Frame	Cond.										
30	**5**	15.3 (389)	11.4 (290)	166.8 (4237)		6	70 (1778)		71 (269)	300 (19)	1170 (74)
30	**8**	15.5 (394)	14 (356)	132.2 (3358)		8	83.4 (2118)		113 (428)	410 (26)	1600 (101)
31	**8**	15.5 (394)	14 (356)	176.21 (4476)		8	83.4 (2118)		113 (428)	410 (26)	1600 (101)
32	**3**	15.5 (394)	14 (356)	88.6 (2250)		8	83.4 (2118)		113 (428)	410 (26)	1600 (101)
33	**3**	15.3 (389)	11.4 (290)	166.9 (4239)		6	83.4 (2118)		71 (269)	300 (19)	1170 (74)
34	**3**	15.5 (394)	14 (356)	132.2 (3358)		8	83.4 (2118)		113 (428)	410 (26)	1600 (101)
34	**5**	15.5 (394)	14 (356)	176.2 (4475)		8	83.4 (2118)		113 (428)	410 (26)	1600 (101)
36	**8**	16.3 (414)	14 (356)	208.5 (5296)		8	83.4 (2118)		147 (556)	550 (35)	2160 (136)
37	**3**	15.8 (401)	13 (330)	180.9 (4595)	176.4 (4480)	8	112.2 (2850)	107.7 (2735)	96 (363)	420 (26)	1660 (105)
37	**5**	16.3 (414)	14 (356)	164.4 (4176)		8	83.4 (2118)		147 (556)	550 (35)	2160 (136)

Note: Minimum Chilled Water Flow Rate is for full load selections; Variable Primary Flow ratings as low as 50% of the minimum are permitted. Glycol limits are higher. Contact your Johnson Controls Sales Office for ratings and further information.

© 2025 Johnson Controls. All rights reserved.

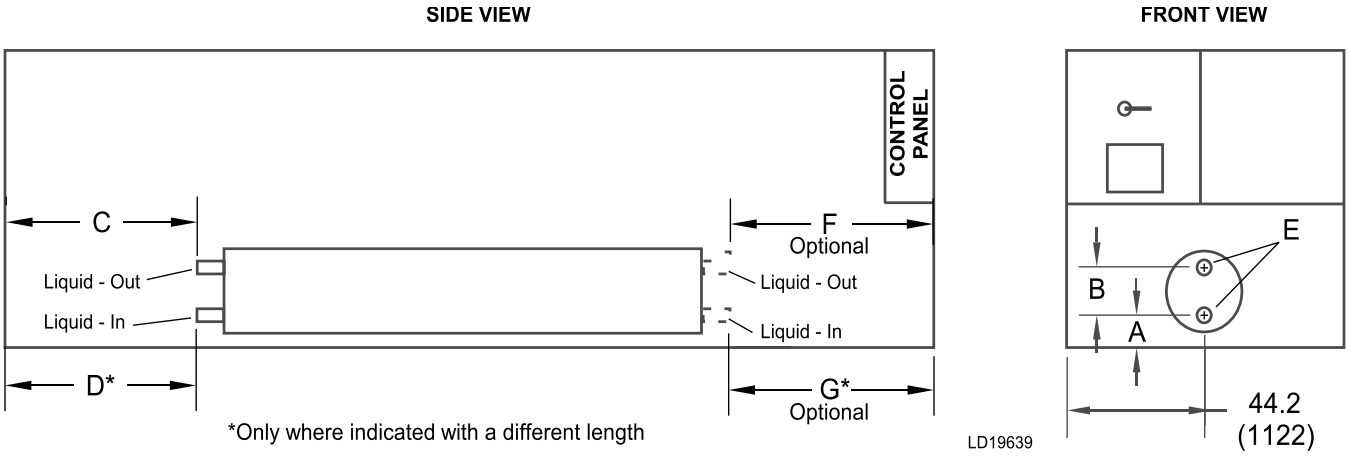

Table 8 - Standard two-pass, rear inlet/outlet evaporator (cont'd)

All dimensions - in. (mm)											
YVAA											
Frame	Cond.	A	B	C	D	e-nozzle size	f	g	Water volume gal (l)	Minimum chilled water flow rate GPM (l/s)	Maximum chilled water flow rate GPM (l/s)
39	8	16.3 (414)	14 (356)	252.5 (6414)		8	83.5 (2121)		147 (556)	550 (35)	2160 (136)
41	3	15.5 (394)	14 (356)	164.6 (4181)		8	83.8 (2129)		130 (492)	470 (30)	1870 (118)
42	5	15.5 (394)	14 (356)	252.6 (6416)		8	83.8 (2129)		130 (492)	470 (30)	1870 (118)
42	8	16.3 (414)	14 (356)	296.5 (7531)		8	83.5 (2121)		147 (556)	550 (35)	2160 (136)
44	3	15.8 (401)	13 (330)	287.1 (7292)	282.5 (7177)	8	94.2 (2393)	89.7 (2278)	96 (363)	420 (26)	1660 (105)
47	5	16.3 (414)	14 (356)	308.4 (7833)		8	71.5 (1816)		147 (556)	550 (35)	2160 (136)
48	3	15.8 (401)	13 (330)	331.2 (8412)	326.6 (8296)	8	94.2 (2393)	89.7 (2278)	96 (363)	420 (26)	1660 (105)
49	0	15.5 (394)	14 (355)	176.5 (4482)		8	71.7 (1820)		130 (492)	470 (30)	1870 (118)
50	0	16.3 (414)	14 (356)	176.2 (4475)		8	71.5 (1816)		147 (556)	550 (35)	2160 (136)
52	3	16.3 (414)	14 (356)	308.4 (7833)		8	71.5 (1816)		147 (556)	550 (35)	2160 (136)

Note: Minimum Chilled Water Flow Rate is for full load selections; Variable Primary Flow ratings as low as 50% of the minimum are permitted. Glycol limits are higher. Contact your Johnson Controls Sales Office for ratings and further information.

© 2025 Johnson Controls. All rights reserved.

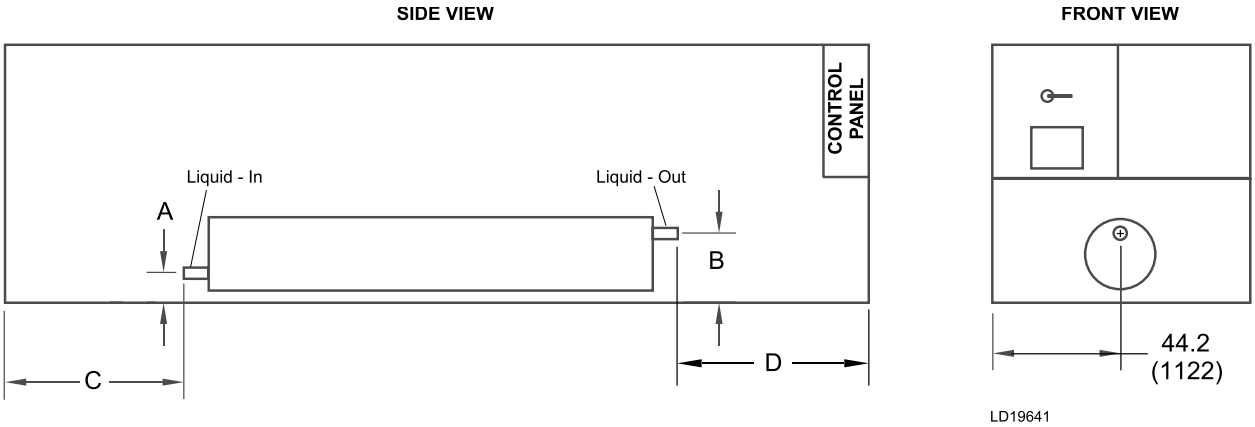

Table 9 - Optional three-pass rear inlet/front outlet evaporator

All dimensions - in. (mm)									
YVAA									
Frame	Cond.	A	B	C	D	e- nozzle size	Water volume gal (l)	Minimum chilled water flow rate GPM (l/s)	Maximum chilled water flow rate GPM (l/s)
15	**3**	15.1 (384)	26.5 (673)	6.8 (173)	34.5 (876)	5	58 (220)	170 (11)	650 (41)
16	**5**	15.1 (384)	26.5 (673)	29.2 (742)	56.1 (1425)	5	58 (220)	170 (11)	650 (41)
17	**8**	15.1 (384)	26.5 (673)	34.9 (886)	70 (1778)	6	71 (269)	200 (13)	780 (49)
18	**3**	25.5 (648)	25.5 (648)	17.7 (450)	56.8 (1443)	5	48 (182)	130 (8)	520 (33)
19	**5**	14.1 (358)	25.5 (648)	61.5 (1562)	56.7 (1440)	5	48 (182)	130 (8)	520 (33)
19	**8**	15.3 (389)	26.7 (678)	117.3 (2979)	56.1 (1425)	5	58 (220)	170 (11)	650 (41)
20	**0**	15.1 (384)	26.53 (674)	1.7 (43)	38.1 (968)	6	71 (269)	200 (13)	780 (49)
21	**3**	14.1 (358)	25.5 (648)	61.6 (1565)	58.8 (1494)	5	48 (182)	130 (8)	520 (33)
21	**5**	15.1 (384)	26.5 (673)	34.9 (886)	70 (1778)	6	71 (269)	200 (13)	780 (49)
21	**8**	15.3 (389)	26.7 (678)	78.9 (2004)	70.3 (1786)	6	71 (269)	200 (13)	780 (49)

Note: Minimum Chilled Water Flow Rate is for full load selections; Variable Primary Flow ratings as low as 50% of the minimum are permitted. Glycol limits are higher. Contact your Johnson Controls Sales Office for ratings and further information.

© 2025 Johnson Controls. All rights reserved.

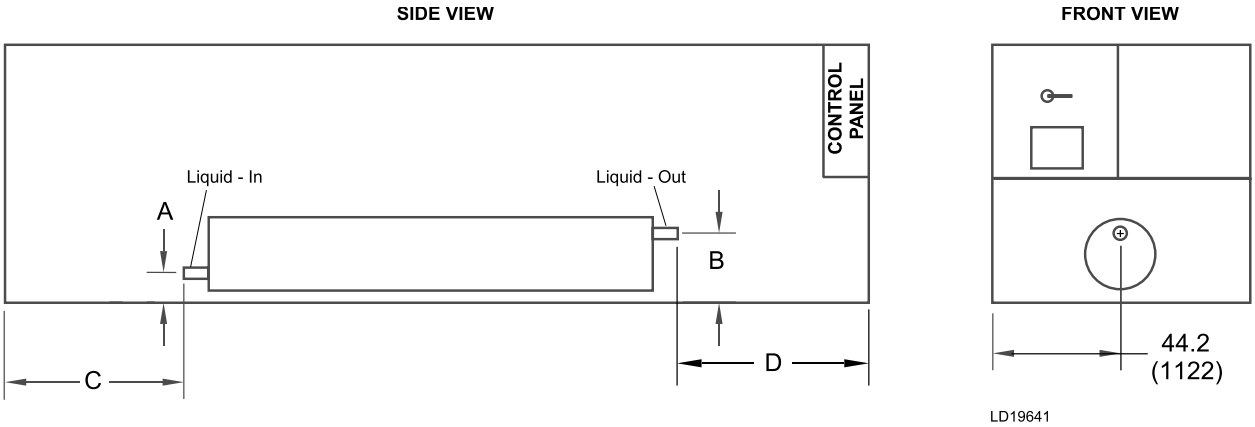

Table 9 - Optional three-pass rear inlet/front outlet evaporator (cont'd)

All dimensions - in. (mm)									
YVAA									
Frame	Cond.	A	B	C	D	e- nozzle size	Water volume gal (l)	Minimum chilled water flow rate GPM (l/s)	Maximum chilled water flow rate GPM (l/s)
23	**3**	14.1 (358)	25.5 (648)	73.2 (1859)	56.1 (1425)	5	58 (220)	170 (11)	650 (41)
24	**5**	15.3 (389)	26.7 (678)	29.9 (759)	56.1 (1425)	6	71 (269)	200 (13)	780 (49)
24	**8**	15.3 (389)	26.7 (678)	122.9 (3122)	70 (1778)	6	71 (269)	200 (13)	780 (49)
26	**3**	15.3 (389)	26.7 (678)	117.1 (2974)	56.1 (1425)	5	58 (220)	170 (11)	650 (41)
27	**0**	15.3 (388)	26.7 (678)	16.8 (427)	51.9 (1318)	6	82 (310)	200 (13)	780 (49)
27	**3**	15.3 (389)	26.7 (678)	42.9 (1090)	70 (1778)	6	82 (310)	200 (13)	780 (49)
27	**5**	15.5 (394)	29.5 (749)	88.6 (2250)	71.8 (1824)	6	113 (428)	270 (17)	1060 (67)
27	**8**	15.5 (394)	29.5 (749)	88.3 (2243)	71.8 (1824)	6	113 (428)	270 (17)	1060 (67)
29	**5**	15.5 (394)	29.5 (749)	88.6 (2250)	71.8 (1824)	6	113 (428)	270 (17)	1060 (67)
30	**3**	15.3 (389)	26.7 (678)	122.9 (3122)	70 (1778)	6	71 (269)	200 (13)	780 (49)

Note: Minimum Chilled Water Flow Rate is for full load selections; Variable Primary Flow ratings as low as 50% of the minimum are permitted. Glycol limits are higher. Contact your Johnson Controls Sales Office for ratings and further information.

© 2025 Johnson Controls. All rights reserved.

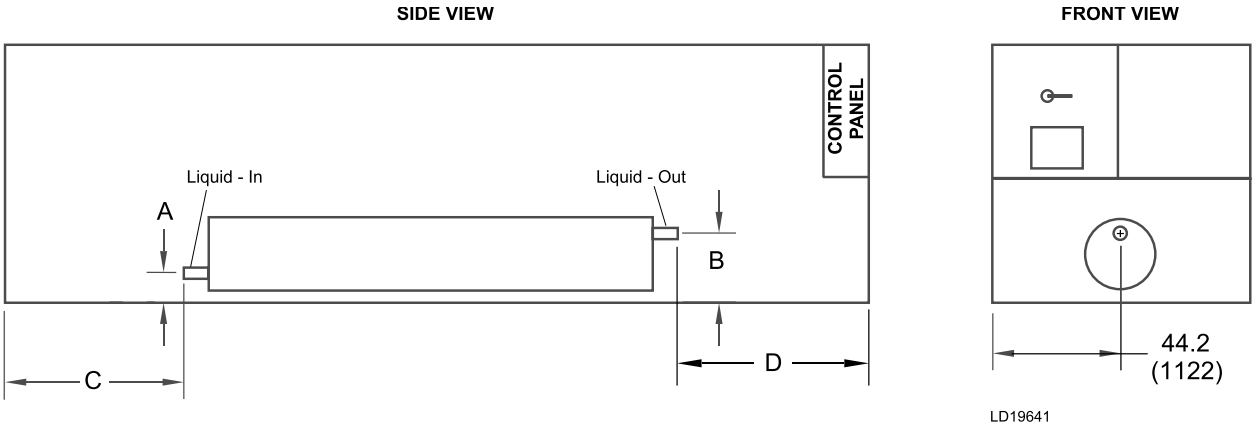

Table 9 - Optional three-pass rear inlet/front outlet evaporator (cont'd)

All dimensions - in. (mm)									
YVAA									
Frame	Cond.	A	B	C	D	e-nozzle size	Water volume gal (l)	Minimum chilled water flow rate GPM (l/s)	Maximum chilled water flow rate GPM (l/s)
30	**5**	15.3 (389)	26.7 (678)	166.9 (4239)	70 (1778)	6	71 (269)	200 (13)	780 (49)
30	**8**	15 (381)	30.3 (770)	132.2 (3358)	71.8 (1824)	6	113 (428)	270 (17)	1060 (67)
31	**8**	15 (381)	29.5 (749)	176.6 (4486)	71.8 (1824)	6	113 (428)	270 (17)	1060 (67)
32	**3**	15.5 (394)	29.5 (749)	88.6 (2250)	71.8 (1824)	6	113 (428)	270 (17)	1060 (67)
33	**3**	15.3 (389)	26.7 (678)	166.9 (4239)	70 (1778)	6	71 (269)	200 (13)	780 (49)
34	**3**	15.5 (394)	29.5 (749)	132.6 (3368)	71.8 (1824)	6	113 (428)	270 (17)	1060 (67)
34	**5**	15.5 (394)	29.5 (749)	176.2 (4475)	71.8 (1824)	6	113 (428)	270 (17)	1060 (67)
36	**8**	16.3 (414)	30.3 (770)	208.6 (5298)	83.5 (2121)	8	147 (556)	370 (23)	1440 (91)
37	**3**	15.8 (401)	28.8 (732)	180.9 (4595)	112.2 (2850)	6	94 (356)	280 (18)	1100 (69)
37	**5**	16.3 (414)	30.3 (770)	164.3 (4173)	83.4 (2118)	8	147 (556)	370 (23)	1440 (91)

Note: Minimum Chilled Water Flow Rate is for full load selections; Variable Primary Flow ratings as low as 50% of the minimum are permitted. Glycol limits are higher. Contact your Johnson Controls Sales Office for ratings and further information.

© 2025 Johnson Controls. All rights reserved.

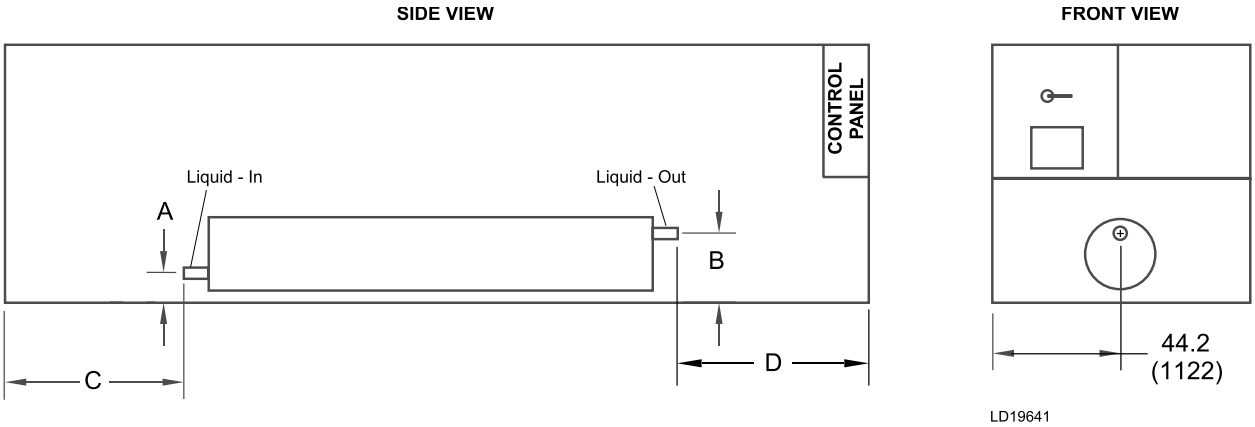

Table 9 - Optional three-pass rear inlet/front outlet evaporator (cont'd)

All dimensions - in. (mm)									
YVAA									
Frame	Cond.	A	B	C	D	e-nozzle size	Water volume gal (l)	Minimum chilled water flow rate GPM (l/s)	Maximum chilled water flow rate GPM (l/s)
39	**8**	16.3 (414)	30.3 (770)	252.5 (6414)	83.5 (2121)	8	147 (556)	370 (23)	1440 (91)
41	**3**	15.5 (394)	29.5 (749)	164.6 (4181)	83.8 (2129)	6	128 (485)	320 (20)	1230 (77)
42	**5**	15.5 (394)	29.5 (749)	252.6 (6416)	83.8 (2129)	6	128 (485)	320 (20)	1230 (77)
42	**8**	16.3 (414)	30.3 (770)	296.5 (7531)	83.5 (2121)	8	147 (556)	370 (23)	1440 (91)
44	**3**	15.8 (401)	28.8 (732)	287.1 (7292)	94.2 (2393)	6	94 (356)	280 (18)	1100 (69)
47	**5**	16.3 (414)	30.3 (770)	308.4 (7833)	71.5 (1816)	8	147 (556)	370 (23)	1440 (91)
48	**3**	15.8 (401)	28.8 (732)	331.2 (8412)	94.2 (2393)	6	94 (356)	280 (18)	1100 (69)
49	**0**	15.5 (394)	29.5 (749)	176.2 (4476)	71.5 (1817)	6	130 (492)	320 (20)	1230 (77)
50	**0**	16.3 (414)	30.3 (770)	176.2 (4475)	71.5 (1816)	8	147 (556)	370 (23)	1440 (91)
52	**3**	16.3 (414)	30.3 (770)	308.4 (7833)	71.5 (1816)	8	147 (556)	370 (23)	1440 (91)

Note: Minimum Chilled Water Flow Rate is for full load selections; Variable Primary Flow ratings as low as 50% of the minimum are permitted. Glycol limits are higher. Contact your Johnson Controls Sales Office for ratings and further information.

© 2025 Johnson Controls. All rights reserved.

The following data is applicable to select configurations. Other configurations are available through our configuration/selection software.

Contact your nearest Johnson Controls Sales Office for the chiller configuration that best matches your specific needs.

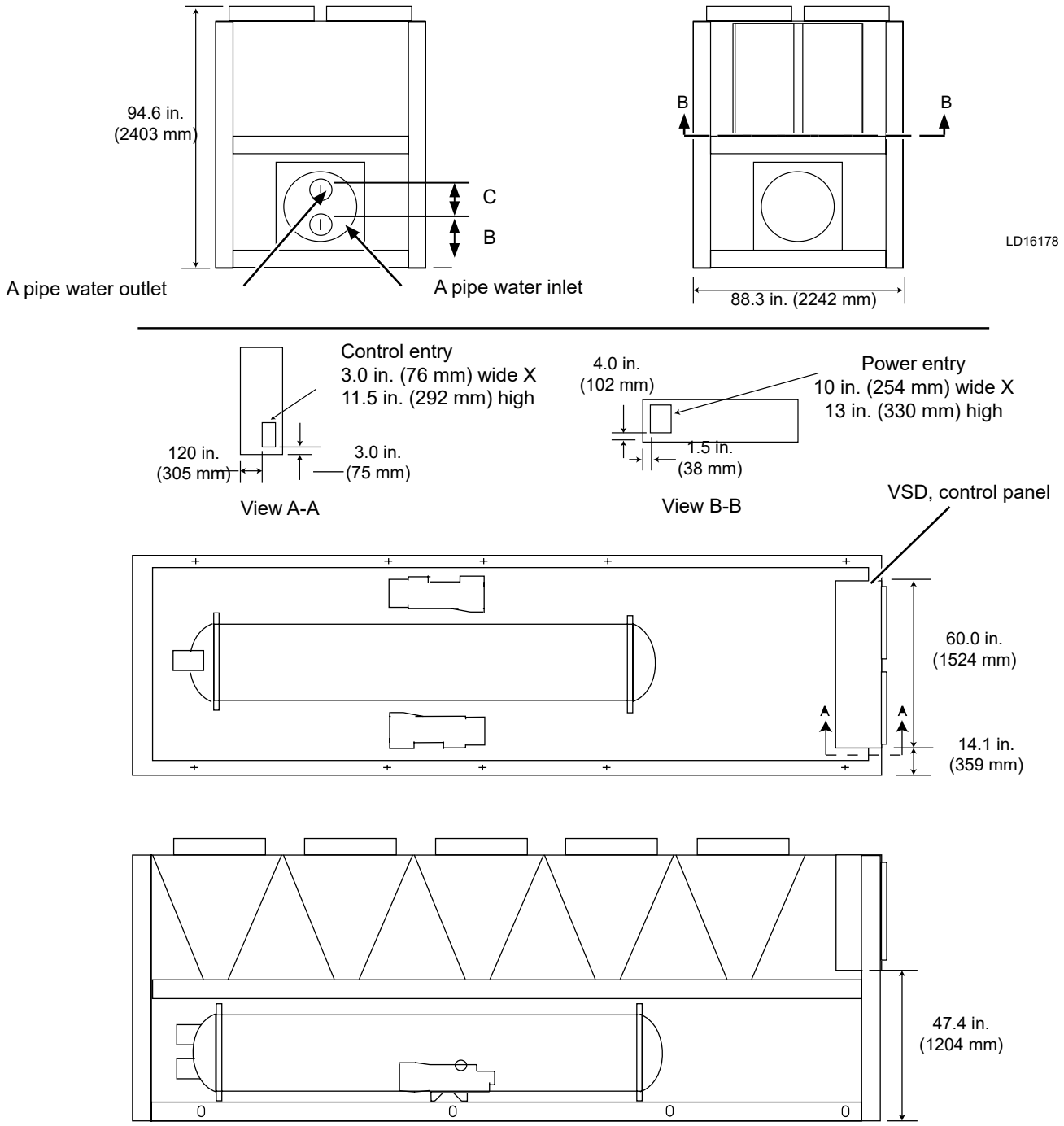

Figure 24 - YVAA dimensions

© 2025 Johnson Controls. All rights reserved.

This page is intentionally left blank.

© 2025 Johnson Controls. All rights reserved.

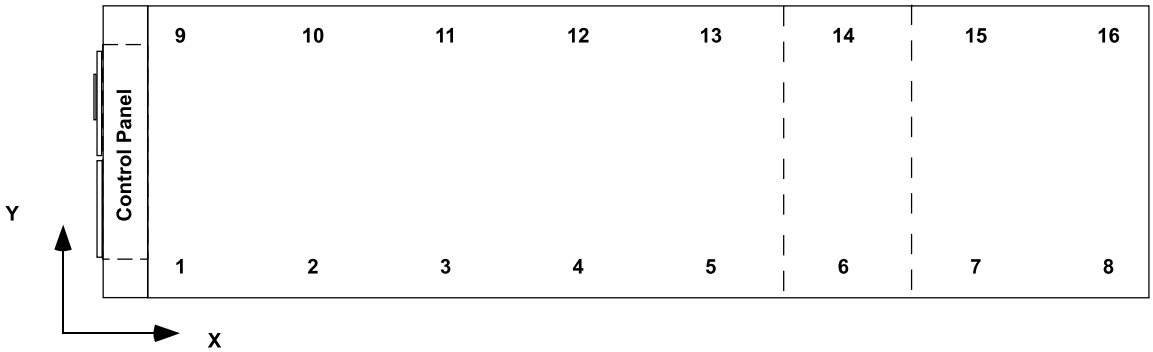

LD18587

Table 10 - Isolator selection and mounting locations

YVAA configuration			Description	1	2	3	4	5	6	7	8
Frame	Cond	Evap									
015	3	B	Isolator X-Dimension	10 (254)	73 (1,854)	144 (3,658)	193 (4,902)				
			Isolator Y-Dimension	1 (25.4)							
016	5	B	Isolator X-Dimension	10 (254)	77 (1,956)	118 (2,997)	157 (3,988)	220 (5,588)			
			Isolator Y-Dimension	1 (25.4)							
017	8	C	Isolator X-Dimension	10 (254)	81 (2,057)	149 (3,785)	187 (4,750)	251 (6,375)			
			Isolator Y-Dimension	1 (25.4)							
018	3	A	Isolator X-Dimension	10 (254)	76 (1,930)	124 (3,150)	163 (4,140)	210 (5,334)			
			Isolator Y-Dimension	1 (25.4)							
019	5	A	Isolator X-Dimension	10 (259)	76 (1,930)	118 (2997)	157 (3,988)	208 (5,283)	281 (7,134)		
			Isolator Y-Dimension	1 (25.4)							
019	8	B	Isolator X-Dimension	10 (254)	76 (1,930)	118 (2,997)	157 (3,988)	209 (5,309)	308 (7,823)		
			Isolator Y-Dimension	1 (25.4)							
020	0	C	Isolator X-Dimension	10 (254)	46 (1,168)	107 (2,718)	154 (3,912)	217 (5,512)			
			Isolator Y-Dimension	1 (25.4)							
021	3	A	Isolator X-Dimension	10 (254)	76 (1,930)	118 (2,997)	157 (3,988)	209 (5,309)	281 (7,134)		
			Isolator Y-Dimension	1 (25.4)							
021	5	C	Isolator X-Dimension	10 (254)	81 (2,057)	149 (3,785)	187 (4,750)	251 (6,375)			
			Isolator Y-Dimension	1 (25.4)							
021	8	C	Isolator X-Dimension	10 (254)	81 (2,057)	149 (3,785)	187 (4,750)	235 (5,969)	301 (7,645)		
			Isolator Y-Dimension	1 (25.4)							
023	3	B	Isolator X-Dimension	10 (254)	76 (1,930)	118 (2,997)	157 (3,988)	209 (5,309)	281 (7,134)		
			Isolator Y-Dimension	1 (25.4)							
024	5	C	Isolator X-Dimension	10 (254)	76 (1,930)	128 (3,251)	173 (4,394)	220 (5,588)	301 (7,645)		
			Isolator Y-Dimension	1 (25.4)							
024	8	C	Isolator X-Dimension	10 (254)	81 (2,057)	143 (3,632)	187 (4,750)	245 (6,223)	339 (8,611)		
			Isolator Y-Dimension	1 (25.4)							

Notes:
1. Contact your nearest Johnson Controls Sales Office for weight data.
2. All isolator mounting holes are 19 mm.
3. Dimensions are in inches (mm).

© 2025 Johnson Controls. All rights reserved.

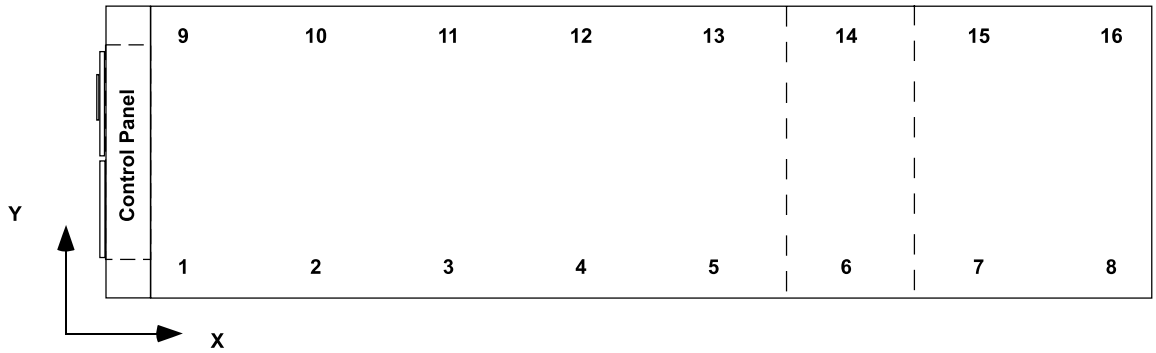

LD18587

Table 10 - Isolator selection and mounting locations (cont'd)

YVAA CONFIGURATION			Descriptio	9	10	11	12	13	14	15	16
Frame	Cond	Evap									
015	3	B	Isolator X-Dimension	10 (254)	73 (1,854)	144 (3,658)	193 (4,902)				
			Isolator Y-Dimension	87 (2,210)							
016	5	B	Isolator X-Dimension	10 (254)	77 (1,956)	118 (2,997)	157 (3,988)	220 (5,588)			
			Isolator Y-Dimension	87 (2,210)							
017	8	C	Isolator X-Dimension	10 (254)	81 (2,057)	149 (3,785)	187 (4,750)	251 (6,375)			
			Isolator Y-Dimension	87 (2,210)							
018	3	A	Isolator X-Dimension	10 (254)	76 (1,930)	124 (3,150)	163 (4,140)	210 (5,334)			
			Isolator Y-Dimension	87 (2,210)							
019	5	A	Isolator X-Dimension	10 (259)	76 (1,930)	118 (2997)	157 (3,988)	208 (5,283)	281 (7,134)		
			Isolator Y-Dimension	87 (2,210)							
019	8	B	Isolator X-Dimension	10 (254)	76 (1,930)	118 (2,997)	157 (3,988)	209 (5,309)	308 (7,823)		
			Isolator Y-Dimension	87 (2,210)							
020	0	C	Isolator X-Dimension	10 (254)	46 (1,168)	107 (2,718)	154 (3,912)	217 (5,512)			
			Isolator Y-Dimension	87 (2,210)							
021	3	A	Isolator X-Dimension	10 (254)	76 (1,930)	118 (2,997)	157 (3,988)	209 (5,309)	281 (7,134)		
			Isolator Y-Dimension	87 (2,210)							
021	5	C	Isolator X-Dimension	10 (254)	81 (2,057)	149 (3,785)	187 (4,750)	251 (6,375)			
			Isolator Y-Dimension	87 (2,210)							
021	8	C	Isolator X-Dimension	10 (254)	81 (2,057)	149 (3,785)	187 (4,750)	235 (5,969)	301 (7,645)		
			Isolator Y-Dimension	87 (2,210)							
023	3	B	Isolator X-Dimension	10 (254)	76 (1,930)	118 (2,997)	157 (3,988)	209 (5,309)	281 (7,134)		
			Isolator Y-Dimension	87 (2,210)							
024	5	C	Isolator X-Dimension	10 (254)	76 (1,930)	128 (3,251)	173 (4,394)	220 (5,588)	301 (7,645)		
			Isolator Y-Dimension	87 (2,210)							
024	8	C	Isolator X-Dimension	10 (254)	81 (2,057)	143 (3,632)	187 (4,750)	245 (6,223)	339 (8,611)		
			Isolator Y-Dimension	87 (2,210)							

Notes:

1. Contact your nearest Johnson Controls Sales Office for weight data.
2. All isolator mounting holes are 19 mm.
3. Dimensions are in inches (mm).

© 2025 Johnson Controls. All rights reserved.

Table 10 - Isolator selection and mounting locations (cont'd)

YVAA configuration			Description	1	2	3	4	5	6	7	8
Frame	Cond	Evap									
026	3	B	Isolator X-Dimension	10 (254)	77 (1,956)	118 (2,997)	157 (3,988)	209 (5,309)	308 (7,823)		
			Isolator Y-Dimension	1 (25.4)							
027	0	D	Isolator X-Dimension	10 (254)	81 (2,057)	149 (3,785)	187 (4,750)	264 (6,706)			
			Isolator Y-Dimension	1 (25.4)							
027	3	D	Isolator X-Dimension	10 (254)	81 (2,057)	161 (4,089)	201 (5,105)	301 (7,645)			
			Isolator Y-Dimension	1 (25.4)							
027	5	E	Isolator X-Dimension	10 (254)	81 (2,057)	161 (4,089)	201 (5,105)	301 (7,645)			
			Isolator Y-Dimension	1 (25.4)							
027	8	E	Isolator X-Dimension	10 (254)	81 (2,057)	161 (4,089)	201 (5,105)	298 (7,569)	339 (8,611)		
			Isolator Y-Dimension	1 (25.4)							
029	5	E	Isolator X-Dimension	10 (254)	81 (2,057)	161 (4,089)	201 (5,105)	296 (7,518)	339 (8,611)		
			Isolator Y-Dimension	1 (25.4)							
030	3	C	Isolator X-Dimension	10 (254)	81 (2,057)	143 (3,632)	187 (4,750)	245 (6,223)	339 (8,611)		
			Isolator Y-Dimension	1 (25.4)							
030	5	C	Isolator X-Dimension	10 (254)	81 (2,057)	144 (3,658)	187 (4,750)	277 (7,036)	383 (9,728)		
			Isolator Y-Dimension	1 (25.4)							
030	8	E	Isolator X-Dimension	10 (254)	81 (2054)	161 (4,089)	201 (5,105)	298 (7,569)	383 (9723)		
			Isolator Y-Dimension	1 (25.4)							
031	8	E	Isolator X-Dimension	10 (254)	81 (2,057)	161 (4,089)	201 (5,105)	298 (7,569)	427 (10,846)		
			Isolator Y-Dimension	1 (25.4)							
032	3	E	Isolator X-Dimension	10 (254)	81 (2,057)	161 (4,089)	201 (5,105)	298 (7,569)	339 (8,611)		
			Isolator Y-Dimension	1 (25.4)							
033	3	C	Isolator X-Dimension	10 (254)	81 (2,057)	143 (3,632)	188 (4,775)	245 (6,223)	383 (9,728)		
			Isolator Y-Dimension	1 (25.4)							
034	3	E	Isolator X-Dimension	10 (254)	81 (2,057)	161 (4,089)	201 (5,105)	298 (7,569)	383 (9,728)		
			Isolator Y-Dimension	1 (25.4)							
034	5	E	Isolator X-Dimension	10 (254)	81 (2,057)	161 (4,089)	201 (5,105)	298 (7,569)	427 (10,846)		
			Isolator Y-Dimension	1 (25.4)							
036	8	J	Isolator X-Dimension	10 (254)	81 (2,057)	145 (3,683)	205 (5,207)	284 (7,214)	383 (9,728)	439 (11,151)	495 (12,573)
			Isolator Y-Dimension	1 (25.4)							

Notes:
1. Contact your nearest Johnson Controls Sales Office for weight data.
2. All isolator mounting holes are 19 mm.
3. Dimensions are in inches (mm).

© 2025 Johnson Controls. All rights reserved.

Table 10 - Isolator selection and mounting locations (cont'd)

YVAA CONFIGURATION			Descriptio	9	10	11	12	13	14	15	16
Frame	Cond	Evap									
026	3	B	Isolator X-Dimension	10 (254)	77 (1,956)	118 (2,997)	157 (3,988)	209 (5,309)	308 (7,823)		
			Isolator Y-Dimension	87 (2,210)							
027	0	D	Isolator X-Dimension	10 (254)	81 (2,057)	149 (3,785)	187 (4,750)	264 (6,706)			
			Isolator Y-Dimension	87 (2,210)							
027	3	D	Isolator X-Dimension	10 (254)	81 (2,057)	161 (4,089)	201 (5,105)	301 (7,645)			
			Isolator Y-Dimension	87 (2,210)							
027	5	E	Isolator X-Dimension	10 (254)	81 (2,057)	161 (4,089)	201 (5,105)	301 (7,645)			
			Isolator Y-Dimension	87 (2,210)							
027	8	E	Isolator X-Dimension	10 (254)	81 (2,057)	161 (4,089)	201 (5,105)	298 (7,569)	339 (8,611)		
			Isolator Y-Dimension	87 (2,210)							
029	5	E	Isolator X-Dimension	10 (254)	81 (2,057)	161 (4,089)	201 (5,105)	296 (7,518)	339 (8,611)		
			Isolator Y-Dimension	87 (2,210)							
030	3	C	Isolator X-Dimension	10 (254)	81 (2,057)	143 (3,632)	187 (4,750)	245 (6,223)	339 (8,611)		
			Isolator Y-Dimension	87 (2,210)							
030	5	C	Isolator X-Dimension	10 (254)	81 (2,057)	144 (3,658)	187 (4,750)	277 (7,036)	383 (9,728)		
			Isolator Y-Dimension	87 (2,210)							
030	8	E	Isolator X-Dimension	10 (254)	81 (2054)	161 (4,089)	201 (5,105)	298 (7,569)	383 (9723)		
			Isolator Y-Dimension	87 (2,210)							
031	8	E	Isolator X-Dimension	10 (254)	81 (2,057)	161 (4,089)	201 (5,105)	298 (7,569)	427 (10,846)		
			Isolator Y-Dimension	87 (2,210)							
032	3	E	Isolator X-Dimension	10 (254)	81 (2,057)	161 (4,089)	201 (5,105)	298 (7,569)	339 (8,611)		
			Isolator Y-Dimension	87 (2,210)							
033	3	C	Isolator X-Dimension	10 (254)	81 (2,057)	143 (3,632)	188 (4,775)	245 (6,223)	383 (9,728)		
			Isolator Y-Dimension	87 (2,210)							
034	3	E	Isolator X-Dimension	10 (254)	81 (2,057)	161 (4,089)	201 (5,105)	298 (7,569)	383 (9,728)		
			Isolator Y-Dimension	87 (2,210)							
034	5	E	Isolator X-Dimension	10 (254)	81 (2,057)	161 (4,089)	201 (5,105)	298 (7,569)	427 (10,846)		
			Isolator Y-Dimension	87 (2,210)							
036	8	J	Isolator X-Dimension	10 (254)	81 (2,057)	145 (3,683)	205 (5,207)	284 (7,214)	383 (9,728)	439 (11,151)	495 (12,573)
			Isolator Y-Dimension	87 (2,210)							

Notes:

1. Contact your nearest Johnson Controls Sales Office for weight data.
2. All isolator mounting holes are 19 mm.
3. Dimensions are in inches (mm).

© 2025 Johnson Controls. All rights reserved.

Table 10 - Isolator selection and mounting locations (cont'd)

YVAA configuration			Description	1	2	3	4	5	6	7	8
Frame	Cond	Evap									
037	3	F	Isolator X-Dimension	10 (254)	81 (2,057)	145 (3,683)	206 (5,232)	284 (7,214)	427 (10,846)		
			Isolator Y-Dimension	1 (25.4)							
037	5	I	Isolator X-Dimension	10 (254)	81 (2,057)	145 (3,683)	206 (5,232)	284 (7,214)	427 (10,846)		
			Isolator Y-Dimension	1 (25.4)							
039	8	J	Isolator X-Dimension	10 (254)	81 (2,057)	145 (3,683)	206 (5,232)	284 (7,214)	427 (10,846)	483 (12,268)	539 (13,691)
			Isolator Y-Dimension	1 (25.4)							
041	3	H	Isolator X-Dimension	10 (254)	81 (2,057)	145 (3,683)	205 (5,207)	284 (7,214)	427 (10,846)		
			Isolator Y-Dimension	1 (25.4)							
042	5	H	Isolator X-Dimension	10 (254)	81 (2,057)	145 (3,683)	206 (5,232)	284 (7,214)	427 (10,846)	483 (12,268)	539 (13,691)
			Isolator Y-Dimension	1 (25.4)							
042	8	J	Isolator X-Dimension	10 (254)	81 (2054)	145 (3,683)	205 (5,207)	284 (7,214)	427 (10839)	505 (12,827)	562 (14,275)
			Isolator Y-Dimension	1 (25.4)							
044	3	G	Isolator X-Dimension	10 (254)	81 (2,057)	154 (3,912)	206 (5,232)	284 (7,214)	427 (10,846)	483 (12,268)	539 (13,691)
			Isolator Y-Dimension	1 (25.4)							
047	5	J	Isolator X-Dimension	10 (254)	81 (2,057)	154 (3,912)	206 (5,232)	284 (7,214)	427 (10,846)	505 (12,827)	562 (14,275)
			Isolator Y-Dimension	1 (25.4)							
048	3	G	Isolator X-Dimension	10 (254)	81 (2,057)	154 (3,912)	206 (5,232)	284 (7,214)	427 (10,846)	505 (12,827)	562 (14,275)
			Isolator Y-Dimension	1 (25.4)							
049	0	K	Isolator X-Dimension	10 (254)	81 (2,057)	154 (3,912)	205 (5,207)	284 (7,214)	427 (10,846)		
			Isolator Y-Dimension	1 (25.4)							
050	0	J	Isolator X-Dimension	10 (254)	81 (2,057)	154 (3,912)	205 (5,207)	284 (7,214)	427 (10,846)		
			Isolator Y-Dimension	1 (25.4)							
052	3	J	Isolator X-Dimension	10 (254)	81 (2,057)	154 (3,912)	206 (5,232)	284 (7,214)	427 (10,846)	505 (12,827)	562 (14,275)
			Isolator Y-Dimension	1 (25.4)							

Notes:
1. Contact your nearest Johnson Controls Sales Office for weight data.
2. All isolator mounting holes are 19 mm.
3. Dimensions are in inches (mm).

© 2025 Johnson Controls. All rights reserved.

Table 10 - Isolator selection and mounting locations (cont'd)

YVAA CONFIGURATION			Descriptio	9	10	11	12	13	14	15	16
Frame	Cond	Evap									
037	3	F	Isolator X-Dimension	10 (254)	81 (2,057)	145 (3,683)	206 (5,232)	284 (7,214)	427 (10,846)		
			Isolator Y-Dimension	87 (2,210)							
037	5	I	Isolator X-Dimension	10 (254)	81 (2,057)	145 (3,683)	206 (5,232)	284 (7,214)	427 (10,846)		
			Isolator Y-Dimension	87 (2,210)							
039	8	J	Isolator X-Dimension	10 (254)	81 (2,057)	145 (3,683)	206 (5,232)	284 (7,214)	427 (10,846)	483 (12,268)	539 (13,691)
			Isolator Y-Dimension	87 (2,210)							
041	3	H	Isolator X-Dimension	10 (254)	81 (2,057)	145 (3,683)	205 (5,207)	284 (7,214)	427 (10,846)		
			Isolator Y-Dimension	87 (2,210)							
042	5	H	Isolator X-Dimension	10 (254)	81 (2,057)	145 (3,683)	206 (5,232)	284 (7,214)	427 (10,846)	483 (12,268)	539 (13,691)
			Isolator Y-Dimension	87 (2,210)							
042	8	J	Isolator X-Dimension	10 (254)	81 (2054)	145 (3,683)	205 (5,207)	284 (7,214)	427 (10839)	505 (12,827)	562 (14,275)
			Isolator Y-Dimension	87 (2,210)							
044	3	G	Isolator X-Dimension	10 (254)	81 (2,057)	154 (3,912)	206 (5,232)	284 (7,214)	427 (10,846)	483 (12,268)	539 (13,691)
			Isolator Y-Dimension	87 (2,210)							
047	5	J	Isolator X-Dimension	10 (254)	81 (2,057)	154 (3,912)	206 (5,232)	284 (7,214)	427 (10,846)	505 (12,827)	562 (14,275)
			Isolator Y-Dimension	87 (2,210)							
048	3	G	Isolator X-Dimension	10 (254)	81 (2,057)	154 (3,912)	206 (5,232)	284 (7,214)	427 (10,846)	505 (12,827)	562 (14,275)
			Isolator Y-Dimension	87 (2,210)							
049	0	K	Isolator X-Dimension	10 (254)	81 (2,057)	154 (3,912)	205 (5,207)	284 (7,214)	427 (10,846)		
			Isolator Y-Dimension	87 (2,210)							
050	0	J	Isolator X-Dimension	10 (254)	81 (2,057)	154 (3,912)	205 (5,207)	284 (7,214)	427 (10,846)		
			Isolator Y-Dimension	87 (2,210)							
052	3	J	Isolator X-Dimension	10 (254)	81 (2,057)	154 (3,912)	206 (5,232)	284 (7,214)	427 (10,846)	505 (12,827)	562 (14,275)
			Isolator Y-Dimension	87 (2,210)							

Notes:
1. Contact your nearest Johnson Controls Sales Office for weight data.
2. All isolator mounting holes are 19 mm.
3. Dimensions are in inches (mm).

© 2025 Johnson Controls. All rights reserved.

Elastomeric isolator installation

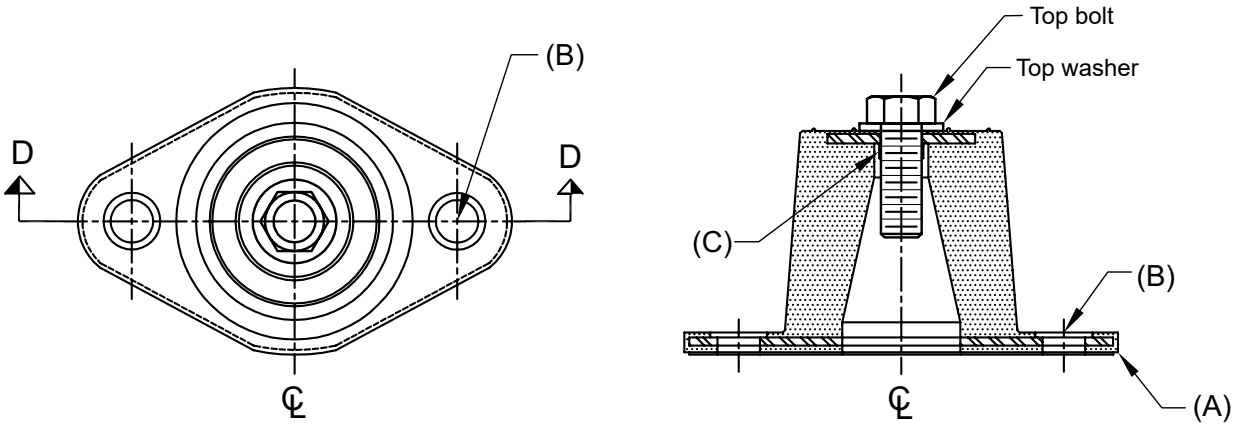

Read the following instructions before beginning installation.

1. Isolators are shipped fully assembled and are to be positioned in accordance with the submittal drawings or as otherwise recommended.
2. Set isolators on floor, housekeeping pad or subbase, ensuring that all isolators lines match the equipment mounting holes. The VMC group recommends that the isolator base (A) be installed on a level surface. Shim or grout as required, leveling all isolator bases to the same elevation (0.03125 of an inch maximum difference can be tolerated).
3. Bolt or anchor all isolators to supporting structure utilizing base thru holes (B).
4. Remove top bolt and top washer. Place equipment on top of isolators so that mounting holes in equipment or base line up with threaded hole (C).
5. Reinstall top bolt and washer and tighten down.

© 2025 Johnson Controls. All rights reserved.

Elastomeric isolator specifications

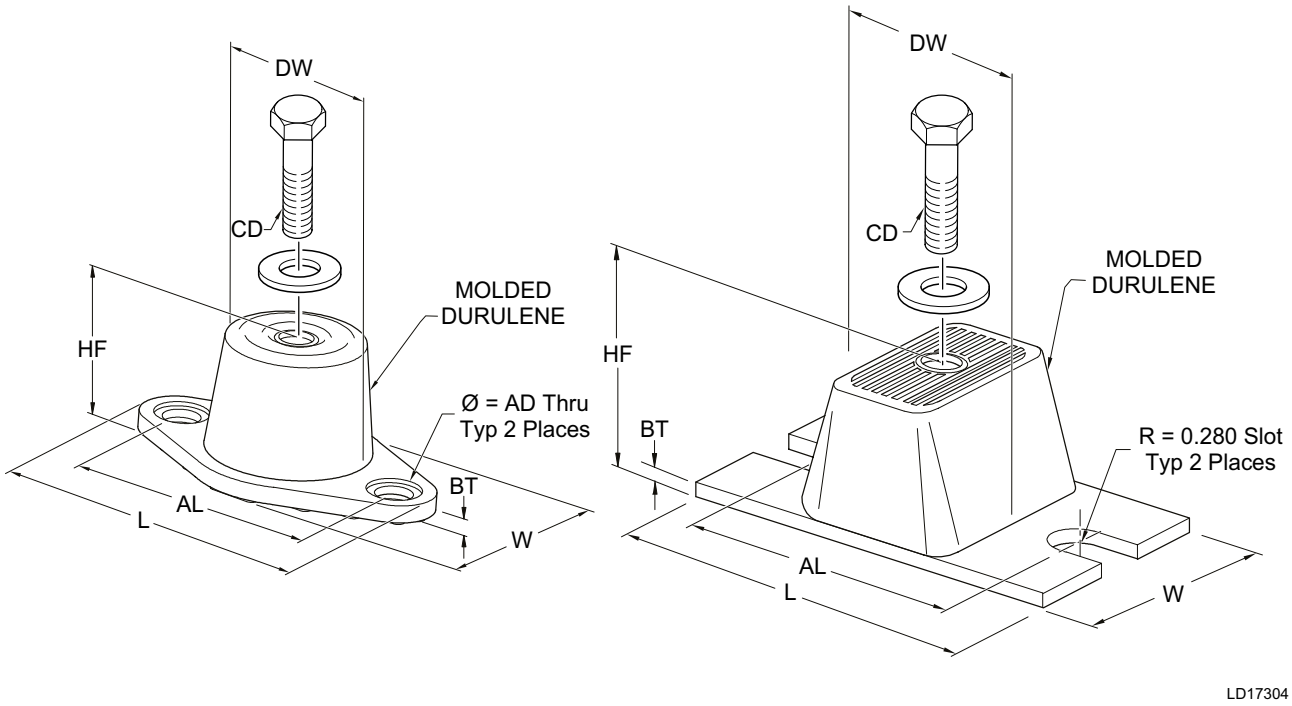

Model P/N	Dimension data (in.)							
	L	W	HF	AL	AD	BT	CD	DW
Type A 029-25335-001 (434002)	5.50 (139.7	3.38 (85.85)	2.88 (73.15)	4.13 (104.90)	0.56 (14.22)	0.25 (6.35)	1/2-13 UNC X 1 (M27 X 3)	2.50 (63.50)
Type B 029-25335-002 (434004) Type B 029-25335-004 (434005)	6.25 (158.75)	4.63 (117.6)	2.75 (69.85)	5.00 (127.00)	0.56 (14.22)	0.38 (9.65)	1/2-13 UNC X 1 (M27 X 3)	3.00 (76.20)

Model P/N	Isolator color	Weight range (lb)	Weight range (kg)
029-25335-001 (434002)	Charcoal	Up to 825	Up to 374
029-25335-002 (434004)	Brick red	826–1688	375–766
029-25335-004 (434005)	Charcoal	1689–4000	767–1814

© 2025 Johnson Controls. All rights reserved.

One inch deflection isolator installation

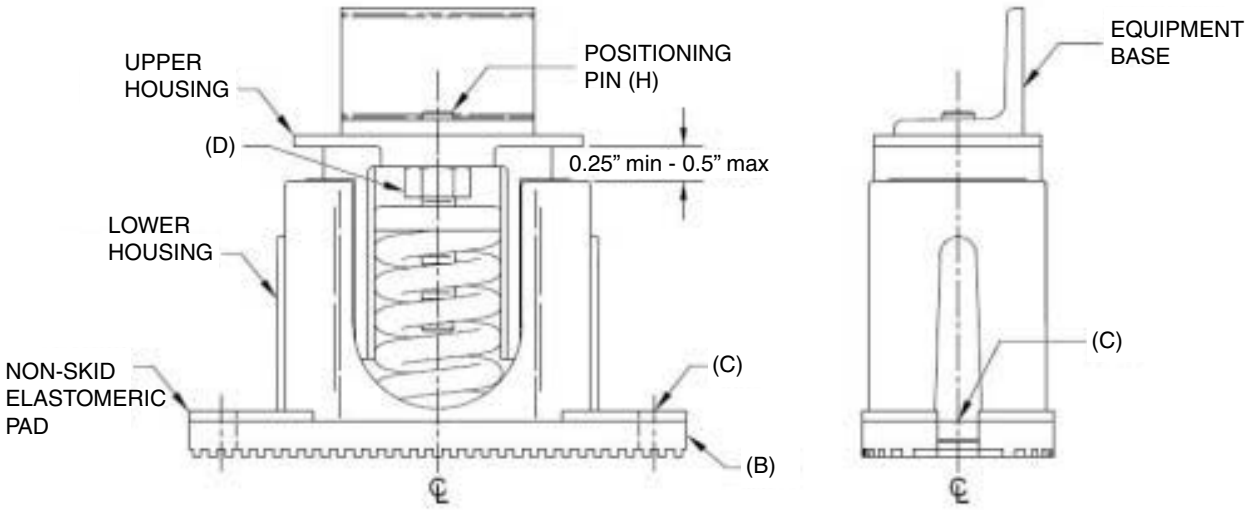

Read the following instructions before beginning installation.

1. Isolators are shipped fully assembled and are to be positioned in accordance with the submittal drawings or as otherwise recommended.
2. Set isolators on floor, housekeeping pad or subbase, ensuring that all isolators centerlines match the equipment mounting holes. The VMC group recommends that the isolator base (“B”) be installed on a level surface. Shim or grout as required, leveling all isolator bases to the same elevation (0.25 in. maximum difference can be tolerated).
3. Bolt or anchor all isolators to supporting structure utilizing base slotted holes (“C”).
4. Place equipment on top of isolators making sure that mounting holes of the equipment line up with isolator positioning pin (“H”).
5. Equipment or machine is at its full operating weight.
6. Adjust each isolator in sequence by turning spring adjusting bolt (“D”) one full counterclockwise turn at a time. Repeat this procedure on all isolators, one at a time.
7. Continue adjusting each isolator until a minimum of 0.25 in. clearance is achieved between the lower housing and upper housing. See illustration above.
8. Fine adjust isolators to level equipment.

© 2025 Johnson Controls. All rights reserved.

One inch deflection spring isolator specifications

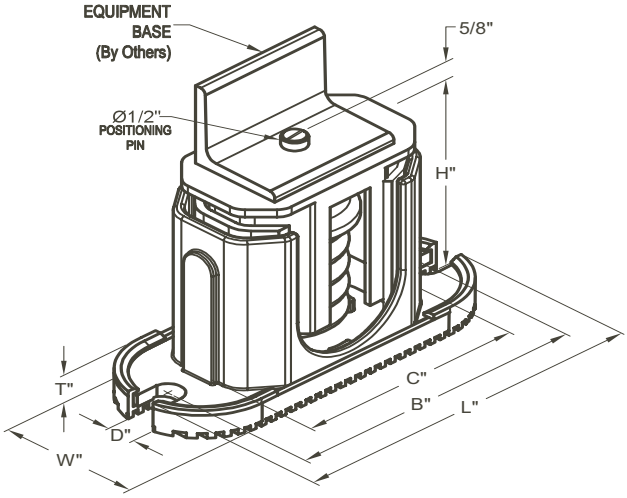

Mount type	Dimension data (in.)						
	W	D	L	B	C	T	H
Type A	3	5/8	7 3/4	6 1/2	4-3/4	1/2	5 5/8
Type B	3	5/8	10 1/2	9 1/4	7 3/4	9/16	6

Type A model P/N	Color code	Rated capacity (for units with all load points less than 1785 lb [810 kg])		
		(lb)	(kg)	Part number
029-25334-002 (433668)	Black	Up to 434	Up to 197	029-25334-002
029-25334-003 (433669)	Dark green	435–765	198–347	029-25334-003
029-25334-004 (433670)	Gray	766–1020	348–463	029-25334-004
029-25334-005 (433871)	White	1021–1156	464–524	029-25334-005
029-25334-006 (433872)	Gray/Red	1157–1785	525–810	029-25334-006

Type B model P/N	Color code	Rated capacity (for units with any load point above 1518 lb [689 kg])		
		(lb)	(kg)	Part number
029-25334-008 (433997)	Dark purple	Up to 1148	Up to 521	029-25334-008
029-25334-009 (433998)	Dark green	1149–1530	522–694	029-25334-009
029-25334-010 (433999)	Gray	1531–2040	695–925	029-25334-010
029-25334-012 (434000)	White	2041–2312	926–1049	029-25334-012
029-25334-013 (434001)	Gray/Red	2313–3570	1050–1619	029-25334-013

Notes:
1. Use either all CP's or all CP2's at all locations on a unit.
2. Installation requires bolting or anchoring mount to support structure with a 2 x 0.625 in. diameter bolts or 2 x 0.5 in. diameter concrete anchors.
3. All springs are designed for 50% over-travel.

© 2025 Johnson Controls. All rights reserved.

Two inch deflection, isolator installation and adjustment

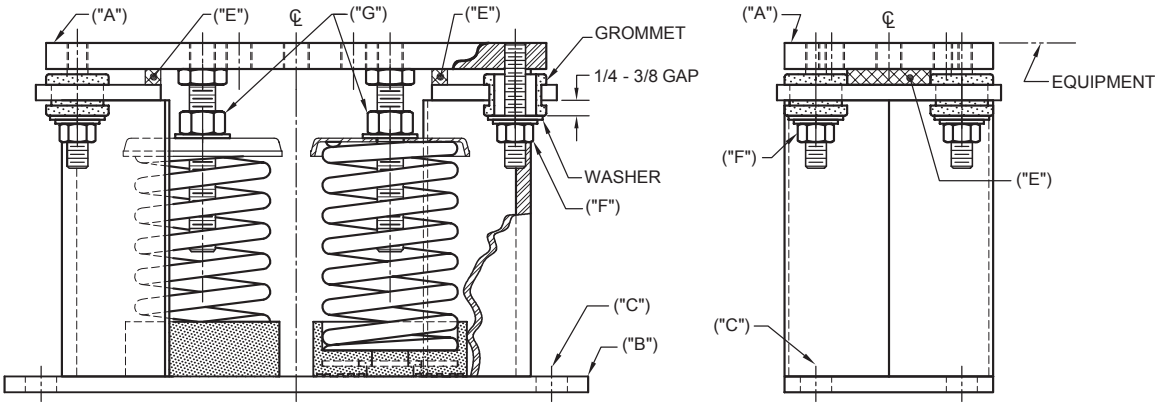

Read the following instructions before beginning installation.

1. Isolators are shipped fully assembled and are to be positioned in accordance with the submittal drawings or as otherwise recommended.
2. Set isolators on floor, housekeeping pad, or subbase, ensuring that all isolator centerlines match the equipment mounting holes. The VMC group recommends that the isolator base plates (“B”) be installed on a level surface. Shim or grout as required, levelling all isolator base plates to the same elevation (0.25 of an inch maximum difference can be tolerated).
3. Bolt or anchor all isolators to supporting structure utilizing base plate through holes (“C”) or weld base plate to supporting structure with 0.375 in. fillet weld 2 in. long @ 4 in. on center around entire base plate or as engineered for specific load and or field conditions.
4. Isolators are shipped to the job site with (2) removable spacer shims (“E”) between the top plate and the housing. These shims must be in place when the equipment is positioned over the isolators.
5. With all shims (“E”) in place, position equipment on top of plate (“A”) of isolator.
6. Bolt equipment securely to top plate of isolator using a minimum of 2 x 0.625 in. UNC A325 GRADE 5 SAE bolts or weld equipment or bracket to the top plate (“A”) of isolator with a minimum 0.375 in. fillet welds 2 in. long @ 3 in. O.C. for a minimum total weld of 10 in. (All sides of equipment or bracket resting on top plate (“A”) must be welded).
7. The adjustment process can only begin after the equipment or machine is at its full operating weight.
8. Back off each of the 4 limit stop lock nuts (“F”) on the isolators 0.5 in.
9. Adjust each isolator in sequence by turning spring adjusting nuts (“G”) one full clockwise turn at a time. Repeat this procedure on all isolators, one at a time. Check the limit stop lock nuts (“F”) periodically to ensure that clearance between the washer and rubber grommet is maintained. Stop adjustment of isolator only when the top plate (“A”) has risen just above the shim (“E”).
10. Remove all spacer shims (“E”).
11. Fine adjust isolators to level equipment.
12. Adjust all limit stop lock nuts (“F”) per isolator, maintaining 0.25 in. to 0.375 in. gap. The limit stop nuts must be kept at this gap to ensure uniform bolt loading during uplift, as is the case when the equipment is drained.

© 2025 Johnson Controls. All rights reserved.

Two inch deflection, restrained spring isolator specifications

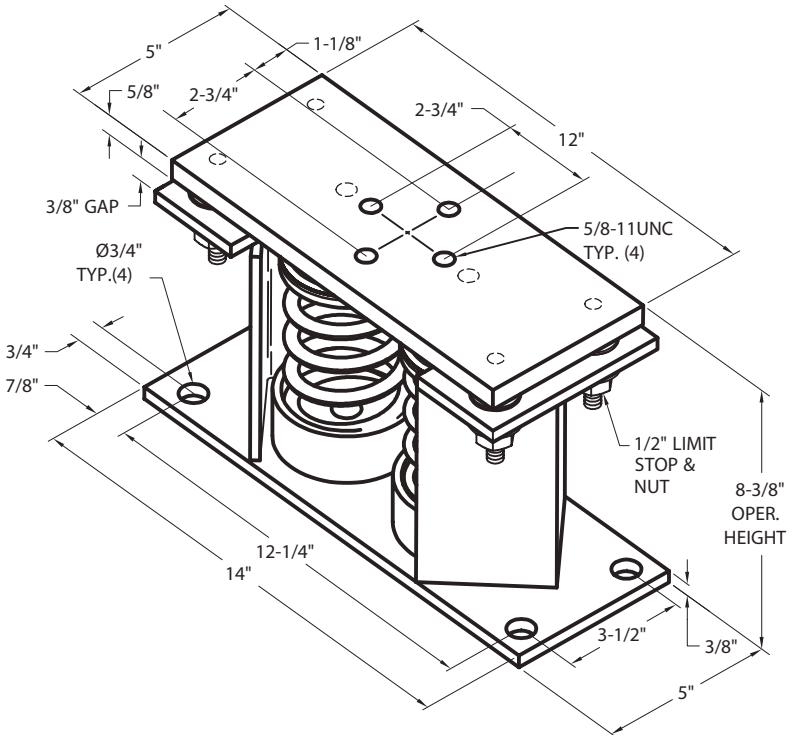

* Weight range (lb)	* Weight range (kg)	Model P/N	Color
Up to 391	Up to 177	029-25336-006 (688690)	Green
392–604	178–274	029-25336-008 (688691)	Dark brown
605–740	275–336	029-25336-009 (688692)	Red
741–1020	337–463	029-25336-010 (688693)	Red/Black
1021–1437	464–652	029-25336-011 (688694)	Pink
1438–2244	653–1018	029-25336-012 (688695)	Pink/Gray
2245–2618	1019–1188	029-25336-013 (688697)	Pink/Gray/Orange
2619–3740	1189–1696	029-25336-014 (688698)	Pink/Gray/Dark brown

* Value is de-rated by 15%

Notes:

1. All dimensions are in inches, interpret as per ANSI Y14.
2. Equipment must be bolted or welded to the top plate to meet allowable seismic ratings.
3. All springs are designed for 50% overload capacity with exception of the 029-25336-013 and 029-25336-014.
4. Consult JCI for concrete installation.

© 2025 Johnson Controls. All rights reserved.

This page is intentionally left blank.

© 2025 Johnson Controls. All rights reserved.

Section 6: Commissioning

Preparation

CAUTION

Commissioning of this unit must only be carried out by Johnson Controls Authorized personnel.

Commissioning personnel should be thoroughly familiar with the information contained in this document before starting the unit.

The following basic checks should be made with the customer power to the unit switched OFF.

WARNING

Proper electrical lock out and tag out procedures must be followed.

Inspection

Inspect unit for installation damage. If found, take action and/or repair as appropriate.

Refrigerant charge

Packaged units are normally shipped as standard with a full refrigerant operating charge. Check that refrigerant pressure is present in both systems and that no leaks are apparent. If no pressure is present, a leak test must be undertaken, the leaks located and repaired.

Do not evacuate or liquid charge with static water in the evaporator. Turn the pump on. Take care to liquid charge slowly to avoid excessive thermal stress at the charging point and to ensure the refrigerant temperature in the evaporator does not go below the freezing point with liquid refrigerant in the evaporator. Once the vacuum is broken, charge into the evaporator or flash tank with the Condenser Drain Valve (Flash Tank Feed) open and the chilled liquid pump ON to the full operating charge, as detailed in *Section 5: Technical data*.

Correct system refrigerant charge

The charge on a system should always be checked when operating for several minutes at full speed with the system stable. Stable conditions are defined as operation without fan cycling, economizer cycling, VI solenoid cycling, or any other system transient conditions. Ideal refrigerant charge will be reached when the refrigerant level in the evaporator is near the middle of the evaporator sight glass.

NOTE

Refrigerant must not be added or removed unless the level is at the bottom or the top of the glass. It is not necessary to weigh charge unless the entire charge has been lost. The ease of charging is possible since the microchannel coils hold only a small amount of refrigerant charge. A charging valve is located between the fixed orifice and the evaporator for adjusting charge. Charge must be added as liquid with the pump ON and liquid flowing through the evaporator.

Service and oil line valves

Open each compressor oil, economizer, and discharge ball or service valves. If valves are of the back-seat type, open them fully (counterclockwise) then close one turn of the stem to ensure operating pressure is fed to pressure transducers.

Compressor oil

To add oil to a circuit - connect a YORK hand oil pump (Part No. 470-10654-000) to the 1/4 in. (6.35 mm) oil charging valve on the oil separator piping with a length of clean hose or copper line, but do not tighten the flare nut. Using clean oil of the correct type (“L” oil), pump oil until all air has been purged from the hose then tighten the nut. Stroke the oil pump to add oil to the oil system. While the compressor is running at full speed, the oil level should be visible in the sight glass of the oil separator. Approximately 2 gal to 3.1 gal (7.5 L to 11.6 L) are present in each refrigerant system.

Avoid levels in either oil separator that are above the middle of the top sight glass. This may cause excessive oil carryover in the system.

© 2025 Johnson Controls. All rights reserved.

High oil concentration in the system may cause nuisance trips resulting from incorrect readings on the level sensor and temperature sensors. Temperature sensor errors may result in poor liquid control which will result in liquid overfeed and subsequently damage the compressor. High oil carryover may also cause liquid to be returned to the compressor, which can damage the compressor.

CAUTION

If condenser fans are manually operated in VFD mode, manually turn on all 4 fan digital outputs before enabling fan control voltage output. Damage to a fan contactor or fan VFD may occur if this instruction is not followed.

Fans

Check that all fans are free to rotate and are not damaged. Ensure blades are at the same height when rotated. Ensure fan guards are securely fixed.

Isolation/Protection

Verify all sources of electrical supply to the unit are taken from a single point of isolation. Check that the maximum recommended fuse sizes given in *Section 5: Technical data* has not been exceeded.

Control panel

Check the panel to see that it is free of foreign materials (wire, metal chips, and so on) and clean out if required.

Power connections

Check that the customer power cables are connected correctly to the terminal blocks or optional circuit breaker. Ensure that connections of power cables within the panels to the circuit breaker or terminal blocks are tight.

Grounding

Verify that the unit's protective ground terminals are properly connected to a suitable grounding point. Ensure that all unit internal ground connections are tight.

Water system

Verify the chilled liquid system has been installed correctly, and has been commissioned with the correct direction of water flow through the evaporator. The inlet should be at the bottom connection on a two pass evaporator. Purge air from the top of the evaporator using the plugged air vent mounted on the top of the evaporator body.

Flow rates and pressure drops must be within the limits given in *Section 5: Technical data*. Operation outside of these limits is undesirable and could cause damage. If main power must be switched OFF for maintenance or shutdown, precautions must be taken.

Before placing the unit back in service, valves should be opened and power must be switched on (if power is removed for more than 8 hours) for at least 8 hours (24 hours if ambient temperature is below 86°F [30°C]) before the unit is restarted.

Flow switch

Verify a chilled water flow switch is correctly fitted in the customer's piping on the evaporator outlet, and wired into the control panel correctly using shielded cable.

There should be a straight run of at least five pipe diameters on either side of the flow switch. The flow switch should be connected to Terminals 2 and 13 in the panel.

Display elements and operation buttons

LED in green indicates the current flow level. LED 0 to LED 9 represent the range between no flow and maximum flow.

A lighting LED indicates the position of the switch point. Orange represents a closed output and red represents an open output. The switch point of LED 7 is a factory setting, but it can be adjusted per the conditions in the field.

To adjust or configure the flow switch, use the two LED indicator buttons, as shown on the following image.

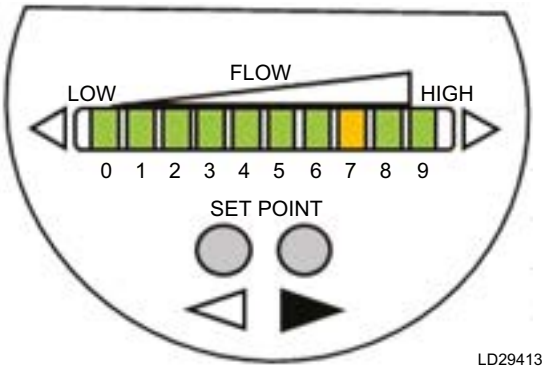

Figure 25 - LED indicator buttons

© 2025 Johnson Controls. All rights reserved.

Setting the thermal dispersion flow switch

To set up the flow switch, perform a high-flow adjustment, which is a quick reaction with falling low.

1. Make sure that the normal flow circulates through the evaporator.
2. Switch on the power supply of the control.
3. Turn on and turn off all LEDs step by step. Make sure that the output is closed and the unit is in operation mode during this process.
4. Press and hold the ► push button until LED 9 turns on.

The flow switch is adapted to the flow conditions of the unit.

When the flow switch is set up, the LED indicates light as follows:

- LED 0, LED 1, LED 2, LED 3, LED 4, LED 5, LED 6, LED 8, and LED 9: green
- LED 7: orange

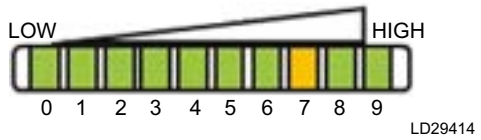

Figure 26 - Flow switch set

When the normal flow is below the representation range of the display, the LED displays in a similar way to the following example:

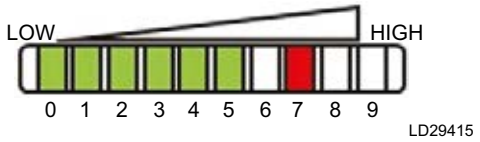

Figure 27 - Flow below the representation range

When the normal flow exceeds the representation range of the display, the LED displays the following:

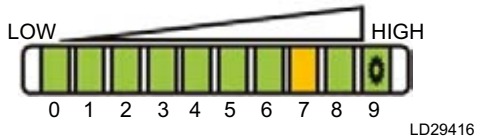

Figure 28 - Flow exceeds the representation range

Temperature sensors

Ensure that the leaving liquid temperature sensor is coated with heat conductive compound (Part No. 013-00890-000) and is inserted to the bottom of the water outlet sensor well in the evaporator. This sensor is part of the pump control freeze protection operation. It provides some freeze protection and must always be fully inserted in the water outlet sensor well.

Programmed options

Verify that the options factory-programmed into the Micro Panel are in accordance with the customer's order requirements by pressing the OPTIONS key on the keypad and reading the settings from the display.

Programmed settings

Ensure the system cutout and operational settings are in accordance with the operating requirements by pressing the PROGRAM key.

Date and time

Program the date and time by first ensuring that the CLK jumper JP2 on the Chiller Control Board is in the ON position. Then press the DATE/TIME key and set the date and time (see *Date/time and schedule keys on Page 173*).

Start/Stop schedule

Program the daily and holiday start/stop by pressing the SCHEDULE key (see *Date/time and schedule keys on Page 173*).

Setpoint and remote offset

Set the required leaving chilled liquid temperature setpoint and Control Range under the SETPOINTS key. The chilled liquid temperature control settings need to be set according to the required operating conditions.

If remote temperature reset (offset) is to be used, the maximum reset required must be programmed by pressing the SETPOINTS key (see *Setpoints key on Page 165*).

© 2025 Johnson Controls. All rights reserved.

First time startup

CAUTION

During the commissioning period there should be sufficient heat load to run the unit under stable full load operation to enable the unit controls, and system operation to be set up correctly, and a commissioning log taken.

Interlocks

Verify that liquid is flowing through the evaporator and that heat load is present. Ensure that any remote run interlocks are in the run position and that the Daily Schedule requires the unit to run or is overridden.

Unit switch

Place the UNIT switch on the keypad to the ON position.

Startup

Press the SYSTEM SWITCHES key and place the system switch for System 1 to the ON position. There may be a few seconds delay before the first compressor starts because of the anti-recycle timer. Be ready when each compressor starts, to switch the UNIT switch OFF immediately if any unusual noises or other adverse conditions develop.

When a compressor is running, the controller monitors oil pressure, motor current, and various other system parameters such as discharge pressure, chilled liquid temperature, and so on. Should any problems occur; the control system will immediately take appropriate action and display the nature of the fault.

Oil pressure

When a compressor starts, press the relevant “System Pressures” key and verify that oil differential pressure (oil pressure-suction pressure) develops immediately. If oil pressure does not develop, the automatic controls will shut down the compressor. Under no circumstances should a restart attempt be made on a compressor, which does not develop oil pressure immediately. Switch the UNIT switch to the OFF position.

Loading

Once the unit has been started, all operations are fully automatic. After an initial period at minimum capacity, the control system will adjust the unit load depending on the chilled liquid temperature and rate of temperature change. If a high heat load is present, the controller will increase the speed of the compressors.

Condenser and fan rotation

Once a compressor is running, discharge pressure rises as refrigerant is pumped into the air-cooled condenser coils. This pressure is controlled by stages of fans to ensure maximum unit efficiency while maintaining sufficient pressure for correct operation of the condensers and the lubrication system.

As discharge pressure rises, the condenser fans operate in stages or ramp up in speed to control the pressure. Verify that the fans operate in the correct direction of rotation and operation is correct for the type of unit.

System charge

Check system charge at steady full compressor load only. It is important that all fans are running for the system. The refrigerant level in the evaporator should be about in the middle of the sight glass. Unless levels are at the bottom or the top of the sight glass, they should not cause concern or require adding or removing charge.

© 2025 Johnson Controls. All rights reserved.

General operation

After completion of the above checks for System 1, switch OFF the SYS 1 switch on the keypad and repeat the process for each subsequent system. When all run correctly, stop the unit, switch all applicable switches to the 'ON' position, and restart the unit.

Ensure all checks are completed in the Equipment Pre - Startup and Startup Checklist. The chiller is then ready to be placed into operation.

Freeze damage protection

WARNING

Failure to follow the required freeze protection protocols can void the factory warranty.

If the YVAA is exposed to subfreezing ambient temperatures at any time during its life, it is critical to protect against evaporator freeze damage. To prevent evaporator freeze damage, follow protocol A, B, or C:

A. Freeze protection fluid: Use an appropriate freeze protection fluid selected for the lowest possible ambient temperature in the chilled fluid circuit.

B. Drain the evaporator: To completely drain the fluid in the evaporator, complete the following steps:

   1. Remove the power to the water box heaters.
   2. Close the chilled fluid circuit isolation valves.
   3. Drain the chilled fluid from the evaporator.
   4. Leave the evaporator drain valves open.

C. Pumps flow fluid through the evaporator: Chilled fluid circuit valves must remain open and pumps must continuously flow fluid through the evaporator when the ambient air temperature is below 36°F (2.2°C). Fluid flow through the evaporator protects against freeze damage in ambient air temperatures down to 0°F (-17.8°C). Fluid flow through the evaporator plus the operation of the water box immersion heaters protects against freeze damage in ambient air temperatures down to -20°F (-28.9°C). After wiring the available dry contacts, the YVAA control logic can send a signal to turn on the chilled fluid circuit pumps when conditions could result in freeze damage. Ensure there is continuous power supply to the chiller control panel and the chilled fluid circuit pumps so that water flow is provided through the evaporator and that the heaters have power. If you cannot guarantee continuous power to the heaters and the minimum flow rate through the evaporator, then follow protocol A or B.

© 2025 Johnson Controls. All rights reserved.

YORK	Model YVAA	
Startup Checklist	Supersedes: 201.28-CL2 (823)	Form: 201.28-CL2 (424)

Customer: _____

Address: _____

Phone: _____

Job name: _____

Location: _____

Customer order number: _____

Johnson Controls contract number: _____

Chiller model number: _____ **Unit serial number**: _____

VSD software version: _____ **Controls software version**: _____

The work, as checked below, is in process and will be completed by: _____ / _____ / _____
Month Day Year

The following work must be completed in accordance with the installation instructions:

Pre-startup unit checks (No power)

The following basic checks must be made with the customer power to the unit switched OFF.

Warning: Correct electrical lock out and tag procedures must be followed.

Check the system 24 h before the initial start:

1. Inspect the unit for shipping or installation damage. Repair as required. ..... ☐
2. Ensure that all piping has been completed ..... ☐
3. Ensure that there are no refrigerant or water piping leaks. Repair as needed. ..... ☐
4. Open each system liquid shut off valve, economizer shut off valve, discharge shut off valve, and oil line ball valve. ..... ☐
5. Adjust spring isolators, if installed, and ensure they are not bottomed out ..... ☐
6. Verify that the pump is controlled by the chiller controller. In subfreezing regions, failure to use a chiller controller to control the chilled water pump voids the warranty. ..... ☐
7. Ensure that a strainer is installed in the customer piping, fitted as close as possible to the liquid inlet connection and provided with a means of local isolation. See 201.28-NM1.1 for details. ..... ☐
8. Ensure that water pumps are on. Check and adjust water pump flow rate preferably using an ultrasonic flow meter. Otherwise, adjust the pressure drop across the evaporator. ..... ☐

   Caution: Excessive flow may cause catastrophic damage to the evaporator.
9. Check the control panel to ensure it is free of foreign material, including wires, metal chips, tools, and documents. Also check for signs of water or moisture. Ensure door gasket seals are sealing correctly and incoming power wiring conduit is caulked. ..... ☐
10. Visually inspect control and power wiring. Wiring must meet NEC, CE, and local codes. ..... ☐
11. Check the tightness of the incoming power wiring and confirm the wiring sizing can meet requirement. ..... ☐
12. Verify that the field wiring matches the three-phase power requirements of the chiller and confirm the phase sequence. Refer to the chiller nameplate. ..... ☐
13. Ensure that a flow switch is connected between terminals 2 and 13 on the user terminal block 1TB in the panel. Throttle back flow to ensure the flow switch opens with a loss of flow. Place the auxiliary pump contacts in series with the flow switch for additional protection, if the pump is turned off during chiller operation ..... ☐
14. Ensure that all control wiring is connected correctly to the user input terminals ..... ☐
15. Ensure that the power supply connection to water box heater kit is correctly made, if applicable. If the water box heater option is selected, YVAA and YVFA open loops are needed to make the power supply connection in customer sites ..... ☐
16. Apply power to the chiller and ensure the compressor heaters are turned on 24 h before the system startup. ..... ☐

© 2025 Johnson Controls. All rights reserved.

Equipment startup checklist

Note: Before proceeding with the following unit checks, verify the heaters have been run for 24 h before starting the unit.

A. Unit checks (No power)

The following basic checks must be made with the customer power to the unit switched off.

Warning: Correct electrical lock out and tag procedures must be followed.

1. Open each system liquid shut off valve, economizer shut off valve, discharge shut off valve and oil line ball valve. If optional eductor and suction valves are installed, be sure to open them. Failure to open the eductor valve results in eductor clog faults. ..... ☐
2. Ensure that a strainer is installed in the customer piping, fitted as close as possible to the liquid inlet connection and provided with a means of local isolation. See *201.28-ICOM1* for details. .... ☐
3. Ensure that water pumps are on. Check and adjust the water pump flow rate, preferably using an ultrasonic flow meter. Otherwise, adjust the pressure drop across the evaporator. ..... ☐

   Caution: Excessive flow may cause catastrophic damage to the evaporator.
4. Check status of condenser fans. Blades must rotate freely and not hit shield. Refer to Fan information in *Section 6 - Commissioning* from the *Form 201.28-NM1.1.* ..... ☐
5. Check tightness of the incoming power wiring inside the power panel and inside the motor terminal boxes..... ☐
6. Check the tightness of power supply connection to the water box heater kit, if applicable. Make sure the waterproofing level of connection can meet IP65 standards. ..... ☐
7. Check for correctly sized fuses in control circuits. ..... ☐
8. Verify that field wiring matches the three-phase power requirements of the chiller. Refer to the chiller nameplate. ..... ☐
9. Ensure that all water temperature sensors are inserted completely in their respective wells and are coated with heat conductive compound..... ☐
10. Ensure that the liquid line temperature sensor is tightly strapped on the liquid line and insulated. .. ☐
11. Ensure that the glycol level in the VSD cooling system is 9 in. to 15 in. (23 cm to 38 cm) from the top of the fill tube. To fill the glycol loop, add glycol until the correct level is reached while the glycol pump is not running. With the chiller in service mode, run the glycol pump for 3 to 5 minutes to purge the air from the system. Turn off the pump and allow the glycol to settle. If the glycol level is below the accepted level, add more glycol. Run the pump again. Repeat these steps until the final glycol level is 9 in. to 15 in. (23 cm to 38 cm) from the top of the tube. The glycol system holds about 3.5 to 5.5 gallons of coolant (P/N 013-03344-000).
12. Ensure that the reservoir cap is tightly installed after the glycol loop is filled. ..... ☐

Caution: Never run the glycol pump without coolant. Running the glycol pump without coolant may damage the pump seals.

Always fill the system with approved YORK coolant (P/N 013-03344-000) to avoid damage to the pump, cooling system heat sinks and the chiller. Overheating of the heat sinks and power panel also occurs.

13. Ensure that the remote start/stop for system 1 on terminals 2 to 15 and system 2 on terminals 2 to 16 are closed on the user terminal block 1TB to allow the systems to run. If remote cycling devices are not utilized, place a wire jumper between these terminals. ..... ☐
14. Ensure that the CLK jumper JP2 is in the ON position..... ☐
15. Ensure that a flow switch is connected between Terminals 2 and 13 on the User Terminal Block 1TB in the panel. Throttle back flow to ensure the flow switch opens with a loss of flow at the minimum required flow. For additional protection, place auxiliary pump contacts in series with the flow switch, if the pump is turned off during chiller operation. When using the pump contacts, suppress the coil of the pump starter with an RC suppressor (031-00808-000. ..... ☐
16. For glycol applications, ensure that the glycol concentration is suitable for the lowest possible ambient temperature at the site location..... ☐
17. Ask the customer to sign after this item to ensure that the customer is aware that insufficient glycol concentration can lead to the evaporator tube freezing up and can void the warranty. ..... ☐

B. Start-up

Panel checks (Power on – Both system switches off)

Warning: You are about to turn power on to this machine. Safety is number one. Only qualified individuals are permitted to service this product. The qualified individual furthermore is to be knowledgeable of, and adhere to, all safe work practices as required by NEC, OSHA, and NFPA 70E. Correct personal protection is to be utilized where and when required.

© 2025 Johnson Controls. All rights reserved.

1. Is the chiller OFF/ON UNIT switch at the bottom of the keypad off? ..... ☐

   Caution: Do not apply power to the chiller unless the system is filled with water or glycol. If the chiller is equipped with the -20°F option, applying power to an empty chilled liquid system causes the evaporator immersion heaters to fail.

2. Apply three-phase power to the chiller. Turn on the optional panel circuit breaker if supplied..... ☐

3. Is the control panel display illuminated? ..... ☐

4. Are the system switches under the SYSTEM SWITCHES key in the off position? This ensures the compressors from starting..... ☐

5. Does the voltage supply correspond to the unit requirement and is it within the limits given in Section 5 - Technical Data in *Form 201.28-NM1.1*?..... ☐

6. Confirm the power supply to water box heater kit is either 115V/60Hz or 220V/50Hz. Turn on the 2-pole-breaker inside of water box heater kit, if evaporator is filled with water in waterside ..... ☐

7. Confirm all the heaters on evaporator can function normally, including the shell heater and water box heaters ..... ☐

8. Confirm the chilled water pump can be automatically started by chiller controller, especially in the subfreezing region ..... ☐

9. Are the heaters on each compressor ON using a clamp-on ammeter? Heater current draw is approximately 3A ..... ☐

10. Are the factory-set overload potentiometers on the VSD Logic Board set correctly? Press the VSD DATA key and use the arrow keys, to scroll to the compressor overload settings. In the unlikely event that they are not set correctly, adjust the potentiometers until the correct values are achieved ..... ☐

    Warning: The VSD is powered up and live. High voltage exists in the area of the circuit board on the bus bars, VSD Pole Assemblies, and wiring to the input inductor.

    Adjust the potentiometers, if needed, using *Table 20 Compressor Motor Overload Settings* in the IOM *(Form 201.28-NM1.1)* The potentiometers are System 1=R19 and System 2=R64.

    Record the Overload Potentiometer settings below:
    R19 = System 1 = _____ A
    R64 = System 2 = _____ A

    Caution: Incorrect settings of the potentiometers may cause damage to the equipment.

11. Press the STATUS key. If the following message appears, immediately contact Johnson Controls Product Technical Support. The appearance of this message may mean the chiller has lost important factory programmed information. The serial number and other important data may need to be reprogrammed. ..... ☐

UNIT WARNING: INVALID SERIAL NUMBER
ENTER UNIT SERIAL NUMBER

Note: Changing the programming of this feature requires the date and time to be set on the chiller before programming. Additional information regarding this message and how to enter the serial number with the factory provided password is outlined in the Serial Number Programming.

12. Program the required options into the panel for the desired operating requirements. Refer to Section 8 in *Form 201.28-NM1.1*. Record the values below..... ☐

    Display language = _____

    Chilled liquid mode = _____

    Local/remote mode = _____

    Display units = _____

    Lead/lag control =_____

    Flash card update = _____

    Datalog to flashcard = _____

    Remote temperature reset = _____

    Remote current reset = _____

    Remote sound limit _____

    Low ambient cutout _____

Caution: Damage to the chiller may result if the options are incorrectly programmed.

C. Programmed values

1. Program the required operating values into the microprocessor for cutouts, safeties, etc., and record them below. Refer to Section 8 in *Form 201.28-NM1.1*..... ☐

   Suction pressure cutout =_____ psig (kPa)

   Low ambient cutout = _____ °F

   Leaving chilled liquid temperature cutout = _____ °F

   Motor current limit = _____ % FLA

   Pulldown current limit = _____ % FLA

   Pulldown current limit time = _____ min

   Subcooling setpoint = _____ °F

6

© 2025 Johnson Controls. All rights reserved.

Remote Unit ID # = _____

Sound limit setpoint = _____ %

Eductor differential = _____ °F

Eductor safety time = _____ min

Motor temp unload = _____ °F

D. Chilled liquid setpoint

Program the Chilled Liquid Setpoint/Range and record: ..... ☐

1. Local Cooling Setpoint = _____ °F
2. Local Cooling Range = _____ to _____ °F
3. Maximum Remote Temperature Reset = _____ to _____ °F

E. Date/Time, daily schedule, and clock jumper

1. Set the date and time. ..... ☐
2. Program the daily schedule start and stop times. ☐
3. Place the panel in Service Mode and turn on each fan stage one by one. Ensure the fans rotate in the correct direction, so air flow exits the top of the chiller ..... ☐
4. Ensure that the flash card data logging feature is active ..... ☐
5. Check the optional fan VSD programming if equipped ..... ☐

F. Initial start-up

After the control panel has been programmed and the compressor heaters have been energized for at least 8 h (ambient temperature more than 96ºF or 24 h (ambient temperature less than 86ºF, the chiller may be placed into operation.

1. Turn on the UNIT switch and program the system switches on the keypad to the on position ..... ☐
2. If cooling demand permits, the compressors start and a flow of refrigerant is noted in the sight glass, after the anti recycle timer times out and the precharge of the DC Bus is completed. After several minutes of operation, the bubbles in the liquid line sight glass disappear and there is a solid column of liquid when the condenser drain (flash tank feed) valves stabilize ..... ☐
3. Allow the compressor to run a short time, being ready to stop it immediately if any unusual noise or adverse conditions develop. Immediately at startup, the compressor may make sounds different from its normal high-pitched sound. This is due to the compressor coming up to speed and the initial lack of an oil film sealing the clearances in the rotors. This should be of no concern and lasts for only a short time ..... ☐
4. The oil separator oil levels must be maintained so that an oil level is visible in the sight glass when a compressor is running at full speed for 15 min to 30 min. An oil level may not be visible in the sight glass when the compressor is off or running below full speed; and it may be necessary to run the compressor at full speed to obtain a level. In shutdown situations and at some load points, much of the oil may be in the evaporator and the level in the separator may fall below the bottom sight glass ..... ☐

   Sight glasses vary in type depending upon the manufacturer. One type has balls that float in the sight glasses to indicate level. Another type has a bullseye glass. The bullseye glass tends to appear to lose the lines in the bullseye when the level is above the glass. Be careful when viewing the sight glass not to confuse a full sight glass with an empty sight glass. Oil level is visible, but not above the top of the sight glass after operating at full speed for 15 min to 30 min. In the rare situation where oil levels are high, drain the oil to lower the level until it is visible in the sight glass. This must be done while operating at full speed.

   Oil levels in the oil separator above the top of the sight glass must be avoided and may cause excessive oil carryover in the system. High oil concentration in the system may cause nuisance trips resulting from low discharge superheat, low solution pressure, and incorrect readings from temperature sensors. Temperature sensor errors may result in poor refrigerant control and liquid overfeed to the compressor. Excessive oil also reduces evaporator performance.

   In the unlikely event that it is necessary to add oil, connect a YORK oil pump to the charging valve on the oil separator, but do not tighten the flare nut on the delivery tubing. With the bottom, suction end, of the pump submerged in oil to avoid entrance of air, operate the pump until oil drips from the flare nut joint, allowing the air to be expelled, and tighten the flare nut. Open the compressor oil charging valve and pump in oil until it reaches the correct level as described above.
5. Check the system operating parameters ..... ☐

G. Refrigerant charge

1. Record the level of refrigerant in the evaporator sight glass with each system operating at full speed for 15 min to 30 min. A refrigerant level must be visible in each evaporator sight glass ..... ☐

System #1 System #2

LD15053

2. Remove charge if the level is above the sight glass and add charge if the level is below the sight glass ..... ☐

© 2025 Johnson Controls. All rights reserved.

H. Oil levels

Record the oil level in the oil separator sight glass with each system operating at full speed for 15 min to 30 min. An oil level must be visible in the sight glass, but not above the sight glass.

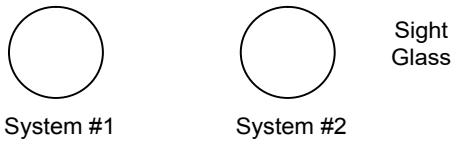

LD15054

I. Liquid line subcooling

Record the liquidl line subcooling from the panel display after operating at full speed for 15 min to 30 min.

Sys 1 liquid subcooling _____ °F

Sys 2 liquid subcooling _____ °F

J. Log readings

Record the following temperatures and pressures from the panel display:

Chilled liquid temperature: _____ °F

VSD frequency: _____ Hz

Sys 1 oil pressure: _____ psig

Sys 1 discharge pressure: _____ psig

Sys 1 suction pressure: _____ psig

Sys 1 condenser liquid pressure: _____ psig

Sys 1 oil temperature: _____ °F

Sys 1 eductor temperature: _____ °F

Sys 1 condenser liquid temp: _____ °F

Sys 1 subcooling: _____ °F

Sys 1 saturated liquid temp: _____ °F

Sys 1 discharge temp: _____ °F

Sys 1 discharge superheat: _____ °F

Sys 1 SAT discharge temp: _____ °F

Sys 1 flash tank level: _____ %

Sys 1 economizer valve: _____ %

Sys 1 condenser subcooling: _____ °F

Sys 1 condenser drain valve: _____ %
(flash tank feed valve)

Sys 1 condenser fans # ON: _____

SYS 1 VSD fan speed: _____ %

Sys 1 VI step solenoid 1: _____

Sys 1 flash tank liquid temperature: _____°F

Sys 1 VI step solenoid 2: _____

Sys 1 run time: ____days____h___min___s

Sys 2 oil pressure: _____ psig

Sys 2 discharge pressure: _____ psig

Sys 2 suction pressure: _____ psig

Sys 2 condenser liquid pressure: _____ psig

Sys 2 oil temperature: _____°F

Sys 2 eductor temperature: _____°F

Sys 2 condenser liquid temp: _____ °F

Sys 2 subcooling: _____ °F

Sys 2 saturated liquid temp: _____ °F

Sys 2 discharge temp: _____ °F

Sys 2 discharge superheat: _____ °F

Sys 2 SAT discharge temp: _____°F

Sys 2 flash tank level: _____ %

Sys 2 economizer valve: _____%

Sys 2 condenser subcooling: _____ °F

Sys 2 condenser drain valve: _____ %
(flash tank feed valve)

Sys 2 condenser fans # ON: _____

Sys 2 VSD fan speed: _____ %

Sys 2 VI step solenoid 1: _____

Sys 2 flash tank liquid temperature: _____°F

Sys 2 VI step solenoid 2: _____

Sys 2 run time: ___days____h____min___s

K. Leak checking

1. Leak check compressors, fittings, and piping to ensure there are not any leaks. ..... ☐

   If the chiller is functioning satisfactorily during the initial operating period with no safety trips; and the chiller controls chilled liquid temperature; the chiller is now ready to be placed into service.

6

© 2025 Johnson Controls. All rights reserved.

This page is intentionally left blank.

© 2025 Johnson Controls. All rights reserved.

Section 7: Operation

Operating controls

Beginning August 2025 the HMI Display was released. The HMI display adds the ability to view more data on a larger screen, replaces the 2-line display and keypad, and incorporates the use of the YORK Chiller Access Manager (YCAM). Details on the new HMI display and YCAM can be found in *Form* 201.00-O1 *HMI for YVAA, YFVA & YAGK,* as well as SB0206 *YORK YCAM Chiller Access Manager Installation Instructions for Air-Cooled Screw Chillers,* and SI0604 *HMI Retrofit Kit Information/Best Practice Initial Release*.

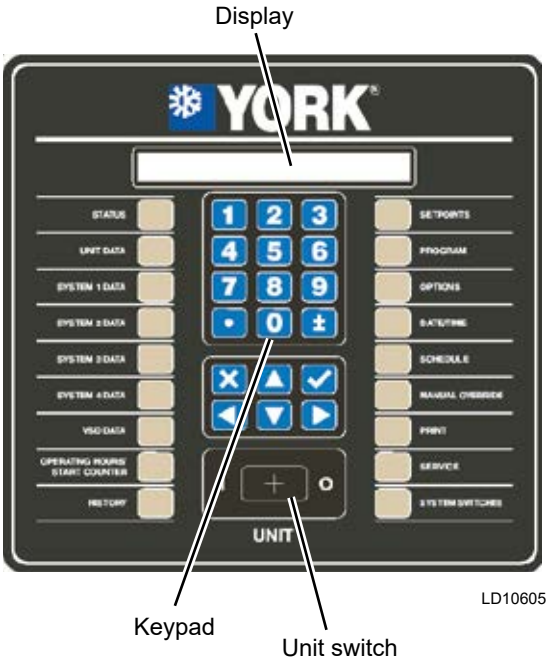

Figure 29 - Keyboard and display

Microboard Overview – IPU2

The 331-03478-xxx microboard was developed as a direct replacement for the 031-02478-xxx line of microboards. No adapter harness is required when replacing a 02478 with the new 03478.

The 03478 uses the IPU2 processor card and provides some new features for the chillers that the 02478 did not have. The 03478 program resides in flash memory instead of EPROM. Program updates are accomplished by loading the new program from an SD card inserted into the SD card reader/writer.

This same SD card reader/writer also allows the user to datalog the operating parameters to an SD card every 5 seconds. This information is invaluable when troubleshooting unit and system problems since it allows the service technician to view operating parameters before a unit fault.

NOTE

The IPU2 can only use a SD card up to 2 GB in capacity.

A 32 GB SD card will not work with the IPU2.

Details on the new data logging capability are explained in the OPTIONS Key area of this manual. A Real Time Clock/BRAM keeps time and setpoints during power outtages.

Microboard Overview – IPU3

Beginning June 2023 a new processor board, the IPU3, was introduced on production chillers. The IPU2 processor is replaced because it is obsolete. The chiller control operation of the chiller remains unchanged for the most part, but some changes and new features are added. More details are provided in each significant section of this manual.

The main differences between the IPU2 and IPU3 processor are listed below.

- Because the IPU2 processor is obsolete the processor included in service kit 331-03478-605 is changed tto IPU3 (reference SI0501 – *IPU3 Replacement Kit / Software Version V01 /Initial Release – Update*) for details.
- IPU3 has a USB port mounted on the drive. This port can be used for loading software. IPU3 also has a coin cell battery.
- The IPU3 does not support Native BAS communication (BACnet MS/TP, MODBUS, or N2). For BAS communication, the SC-EQ or E-link must be used. Since the IPU3 communicates directly with the SC-EQ or E-link, no configuration of the communication port is needed. The SC-EQ will automatically detect the selected YorkTalk Protocol.

© 2025 Johnson Controls. All rights reserved.

- The wiring connection for the SC-EQ has been moved to TB3.
- IPU3 still utilizes the 2-line display, but the IPU3 is required if upgrading the 2-line display to the HMI Display.
- The software filename changes from SOFTWARE.elf to Y.ACS.30.XX_YY.bin. where XX_YY is the software version and build number. **Note:** *The file extension is* **.bin** *for IPU3 and the file does not need to be renamed to install properly.* The correct naming convention for the software for IPU3 is **Y.ACS.30.XX.bin**.
- The IPU2 uses a 2 GB SD card for loading software and data logging. The IPU3 uses a USB port or 32 GB SD card for loading software, but only the SD card can be used for data logging. The USB port cannot be used for data logging.
- The IPU3 utilizes a 32 GB SD card in order for extended data logging. While the IPU3 can use a 2 GB SSD card the data logging capacity is significantly reduced and not recommended. The IPU2 ONLY uses a 2GB SD card.

Unit switch

A double pole single throw ON/OFF rocker switch on the front of the control panel is used to turn the entire chiller ON and OFF. When the switch is placed in the OFF position, the entire unit shuts down immediately and all systems will be disabled. One pole of the UNIT switch contacts is wired to the Run Signal input and the Chiller Control Board **UNIT switch X** digital input (X equals System 1 or 2). Separate System Fuses are also wired in series with each set of UNIT switch contacts. If either fuse is pulled or blown, only the system with the good fuse (Input is high) will run. When both inputs are high, the entire chiller will be enabled to run. When both inputs are low, the chiller will be disabled as a UNIT switch OFF Shutdown.

Keypad

An operator keypad allows complete control of the system from a central location. The keypad offers a multitude of command keys on the left and right side of the keypad to access displays, program setpoints, history data, and initiate system commands. Most keys have multiple displays that can be accessed by repetitively pressing the key or by pressing the ▲,▼,◄, and ► (ARROW) keys. The keypad utilizes an overlay to convert the keypad to various languages.

The keypad also contains keys in the center section for data entry in the various program modes. These keys are as follows:

- 0 – 9 Keys NUMERIC KEYPAD
- PERIOD/DECIMAL
- +/- PLUS/MINUS
- ✓ ENTER
- ✕ CANCEL
- ▲ UP ARROW
- ▼ DOWN ARROW
- ◄ LEFT ARROW
- ► RIGHT ARROW

The numeric keys allow keying numeric values into memory.

The • (PERIOD/DECIMAL) key allows keying a decimal point into numeric values.

The +/- (PLUS/MINUS) key allows making numeric values negative.

The ✓ (ENTER) key stores program changes into memory.

The X (CANCEL) key is used to cancel the data entry operation and returns the programmed value to the original value, before any programming changes were made, when an error is made.

The ▲ (UP ARROW) and ▼ (DOWN ARROW) keys allow scrolling backward (▲) and forward (▼) through items to be programmed under keys such as the PROGRAM or OPTIONS key.

The ▲ (UP ARROW) and ▼ (DOWN ARROW) keys also allow scrolling forward (▼) or backwards (▲) through data display keys that have multiple displays under keys such as UNIT DATA, SYSTEM DATA, HISTORY, PROGRAM, OPTIONS, and so on. The arrow keys can be used instead of repeatedly pressing the data key to see the multiple displays under a key. Once the ▲ ▼ (ARROW) keys are pressed and used for scrolling, pressing the original data key will return to the first display message displayed under the data (UNIT DATA, SYSTEM DATA, and so on) keys.

© 2025 Johnson Controls. All rights reserved.

The ◄ ► (LEFT and RIGHT ARROW) keys allow scrolling between non-numeric program choices under the OPTION, DATE/TIME, and SCHEDULE keys.

The ◄ (LEFT ARROW) key allows programming the default value when programming numeric values. For changing numeric values, the ► (RIGHT ARROW) key has no function.

The ◄ ► (ARROW) keys also allow scrolling sideways between the same displays on different systems. For example, pressing the ► (RIGHT ARROW) key while viewing the system #1 suction pressure moves the display to system #2 suction pressure.

Pressing the ◄ (LEFT ARROW) key moves the opposite direction. The arrow keys also allow fast scrolling through data under keys such as HISTORY by enabling the operator to move between subgroups of data such as Unit, System, and VSD data.

Keypad data entry mode

For numeric programmable items, the data entry mode is entered by pressing any of the number keys, the decimal point key, or the +/- key. When the data entry mode is entered, the data from the key press will be entered and the cursor will appear under the position where the data is being entered.

For non-numeric programmable items, data entry mode is entered by pressing the ◄ or ► (ARROW) keys. When the data entry mode is entered, the cursor will appear under the first position of the non-numeric string. The programmable choice may be changed by pressing the ◄ or ► (ARROW) keys.

To exit the data entry mode and store the programmed value, the ✓ (ENTER) key must be pressed. When the ✓ (ENTER) key is pressed, the cursor will disappear.

The data entry mode may also be exited by pressing the X (CANCEL) key. The programmed data will be returned to its original value when the X (CANCEL) key is pressed.

When the data entry mode is exited, the cursor will disappear. If any other key is pressed while in the Data Entry Mode, the following display will appear for 2 seconds indicating the user must choose between accepting or canceling the change:

```
XXXXXXXXXXX PRESS ✓ TO ACCEPT VALUE OR
X TO CANCEL DATA ENTRY
```

If the ✓ (ENTER) key was pressed from the data entry mode and the numeric value entered was out of range, the following message will appear for 2 seconds followed by the original data display.

```
XXXXXXXXXXX OUT OF RANGE TRY AGAIN!
XXXXXXXXXXXXXXXXXXXXXXXXXXXXXXXXXXXX
```

Display

The 80 character (2 lines of 40 characters per line) display is a Liquid Crystal Display (LCD) used for displaying unit parameters, system parameters, and operator messages. The display has an LED backlight background for night viewing and is viewable in direct sunlight.

Anti-recycle timer

On power-up of the control panel, the anti-recycle timer for each system will be set to 120 seconds and must time out before a compressor is allowed to start.

Whenever a system starts, the anti-recycle timer for all systems will be set to 120 seconds and will count down from the time the motor starts. The timer must time out before another compressor is allowed to start.

Whenever a system shuts down, the anti-recycle timer for that system will be set to 120 seconds. The timer must time out before the system is allowed to restart.

Evaporator pump control

The evaporator pump dry contacts are energized when any of the following conditions are true:

- If a Low Leaving Chilled Liquid Fault occurs.
- Whenever a compressor is running.
- The Daily Schedule is ON and the UNIT switch is ON.

Even if one of above is true, the pump will not run if the panel has been powered up for less than 30 seconds or if the pump has run in the last 30 seconds to prevent pump motor overheating.

© 2025 Johnson Controls. All rights reserved.

Evaporator heater control

The evaporator heater and suction valve actuator are both controlled by ambient air temperature when the system is idle. If no systems are running and the ambient temperature drops below 4.4ºC (40ºF), the heater is turned ON and the suction valve is closed. If no systems are running and the temperature rises above 7.2ºC (45ºF), the heater is turned OFF and the suction opened. Whenever a system is running, the evaporator heater is turned OFF and the suction will be open. Both evaporator heater outputs will always be tuned ON and OFF together. An under voltage condition will keep the heater OFF until full voltage is restored to the system.

CAUTION

Chiller controller cannot detect the failure of all the heaters used in compressor, oil separator, evaporator shell and evaporator water box, etc. with the chilled water pump running and with the evaporator heaters well maintained are extremely crucial especially in subfreezing regions. Chilled water pump control contains the logic of preventative of evaporator freezing.

Compressor heater control

Each compressor has its own heater. The purpose of the heater is to ensure refrigerant does not condense in the compressor. There is no oil sump, but refrigerant could possibly condense in the rotors or the motor housing. The heater will be OFF whenever the respective compressor is running. As soon as the compressor shuts OFF, the heater will turn ON as long as all motor temperature sensors in the compressor read less than 70°C (158°F). The heater will turn OFF, if any internal compressor motor temperature sensor reads more than 71.1°C (160°F).

Alarms

Each system has its own alarm. The Alarm output is ON (dry contact closed) when no fault condition is present and OFF (dry contact open) to indicate an alarm situation. The Alarm will be activated (contacts open), if any of the following are true.

- A System is faulted or inhibited from starting for more than 5 seconds.
- The Unit is faulted or inhibited from starting for more than 5 seconds.
- A System is locked out.
- The Unit is locked out.
- Power is removed from the chiller.

Chiller run contact

The Chiller Run dry contact is closed whenever any system is running. It is open when all systems are shut OFF.

Flow switch control

A chilled liquid flow switch of suitable type MUST be connected between Terminals 2 and 13 of 1TB to provide protection against loss of liquid flow, which will cause evaporator freeze-up if the chiller is permitted to run.

Changing the switch point of the thermal dispersion flow switch

To change the factory-set LED 7, complete the following steps:

1. Press the ◄ or ► push button. The switch point LED flashes.
2. Press the ◄ or ► push button as many times as required in less than 2 seconds between each press. Each press of the push button shifts the LED by one position in the indicated direction.
3. Stop pressing the button when the switch position LED changes to the required position. The flow switch automatically returns to the operating mode with the new setting in 2 seconds.
4. To prevent unintentional settings, press both push buttons simultaneously for at least 10 seconds in operating mode to lock the switch electronically. To unlock the flow switch, perform the same operation again. The setting remains the same in case of power failure.

Remote run/stop

A Remote Run/Stop input is available for each system.

© 2025 Johnson Controls. All rights reserved.

Basic operating sequence

Start sequence and loading

To initiate the start sequence of the chiller, the following conditions must be satisfied before the precharge of the DC Bus will take place:

- UNIT SWITCH must be ON.
- At least one System Switch is ON.
- Run permissive inputs (Remote Cycling Contacts) must be closed.
- No unit faults exist.
- No unit start inhibits exist.
- At least one system not faulted or inhibited.
- The Daily Schedule is calling for the chiller to run.
- The Flow Switch is closed.
- Leaving Chilled Liquid Setpoint is above the Setpoint plus CR (Setpoint High Limit).

Once the precharge takes place, if the anti-recycle timer is timed out the chiller control system on the Chiller Control Board will select the number of compressors to start and begin operation of the compressors. The compressors speed will be ramped to the minimum start frequency and increase speed as needed in an effort to regulate the leaving chilled liquid temperature to meet the desired Setpoint.

© 2025 Johnson Controls. All rights reserved.

See *Figure 30 on page 123* amd *Figure 31 on page 124* to locate the following ports of the 03478 microboard.

Power supplies and LEDs

The 03478 has LEDs to indicate various states of operation of the microboard.

STATUS – Flashes every 1/2 second to indicate that the base board processor is running its program.

POWER – On solid indicates that the base board +12 V and +5 V power supplies are operational.

TX1 – Red LED flashes when transmitting data out Port 1 TB

RX1 – Green LED flashes when receiving data in Port 1 TB3

TX2 – Red LED that flashes when transmitting data out Port 2

RX2 – Green LED that flashes when receiving data in Port 2

VSD_TX – Red LED that flashes when transmitting data out Port 3 to the VSD Logic board.

VSD_RX – Green LED that flashes when receiving data in Port 3 from the VSD Logic board.

TB5 – HMI Display port

24 VAC power is applied to the 331-03478-xxx microboard connector J12 and is then used to create the various DC power sources required by the microboard circuitry. If the chiller control is malfunctioning, the power supply test points should be measured to determine the status of the microboard.

Power supply test points

TP1 GND (Measure TP2, TP3, TP4 and TP5 in reference to this Test Point).

TP2 +3.3 V [3.2 VDC to 3.4 VDC] provides power to the processors.

TP3 +5 V [4.8 VDC to 5.2 VDC] power communication ports 2,3 and 4 and analog sensors.

TP4 +12 V [11.64 VDC to 12.36 VDC] powers the display and backlight and is regulated to become the +5 V.

TP5 +15 V [11.3 VDC to 16.6 VDC] powers the analog outputs to the EEV valves.

Configuration jumpers

The same configuration jumpers that existed on the 02478 are provided on the 03478.

JP4 Remote Temp Reset jumper position Pins 1 to 2 (left) = 4 mA to 20 mA, Pins 2 to 3 (right) = 0 VDC to 10 VDC.

JP5 Remote Current Limit jumper position Pins 1 to 2 (left) = 4 mA to 20 mA, Pins 2 to 3 (right) = 0 VDC to 10 VDC.

JP6 Remote Sound Limit jumper position (Pins 1 to 2 (left) = 4mA to 20 mA, Pins 2 to 3 (right) = 0 VDC to 10 VDC.

© 2025 Johnson Controls. All rights reserved.

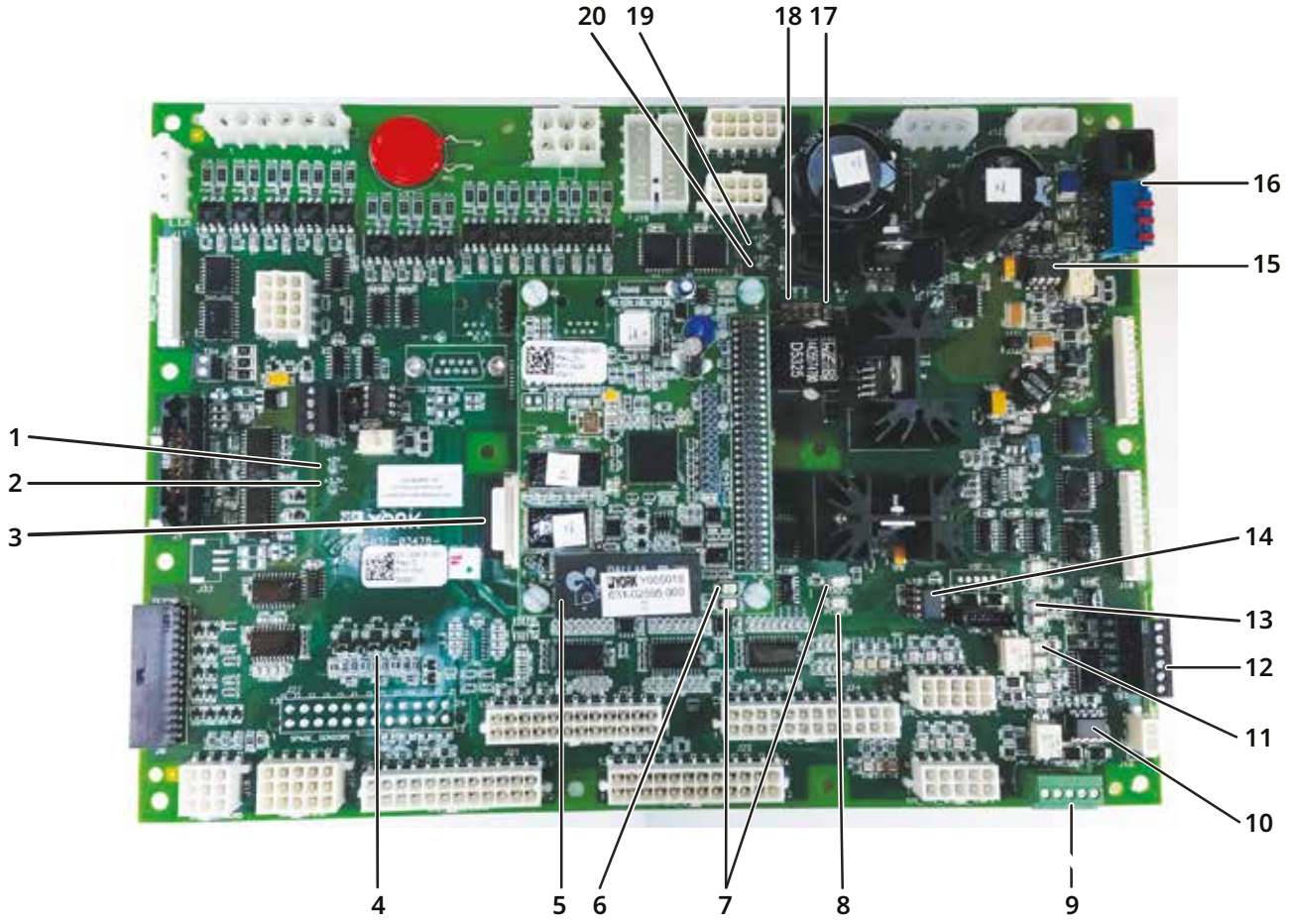

No.	Description	No.	Description	No.	Description	No.	Description
1	TP3 +5 V	**6**	Power LED	**11**	Port 2 RX2, TX2	**16**	Port 1 Native BAS (BACnet and N2)
2	TP2 +3.3 V	**7**	Status LED	**12**	PORT 2 RS-232 Printer or Modbus	**17**	TP1 GND
3	SD Card	**8**	Power LED	**13**	VSD RX VSD-TX	**18**	TP4+12 V
4	JP4, JP5, JP6 Remote Set Point Jumpers	**9**	Port 2 RS485 to E-Link/SC-EQ or Modbus (RTU)	**14**	U18 VSD RS-485 Driver	**19**	TP5 + 15 V
5	U5 RTC/BRAM	**10**	U23 Port 2 RS-485 Driver	**15**	U26 PORT 1 RS-485 Driver	**20**	TP10 + 24 V

Figure 30 - 331-03478-xxx microboard with IPU2 processor

© 2025 Johnson Controls. All rights reserved.

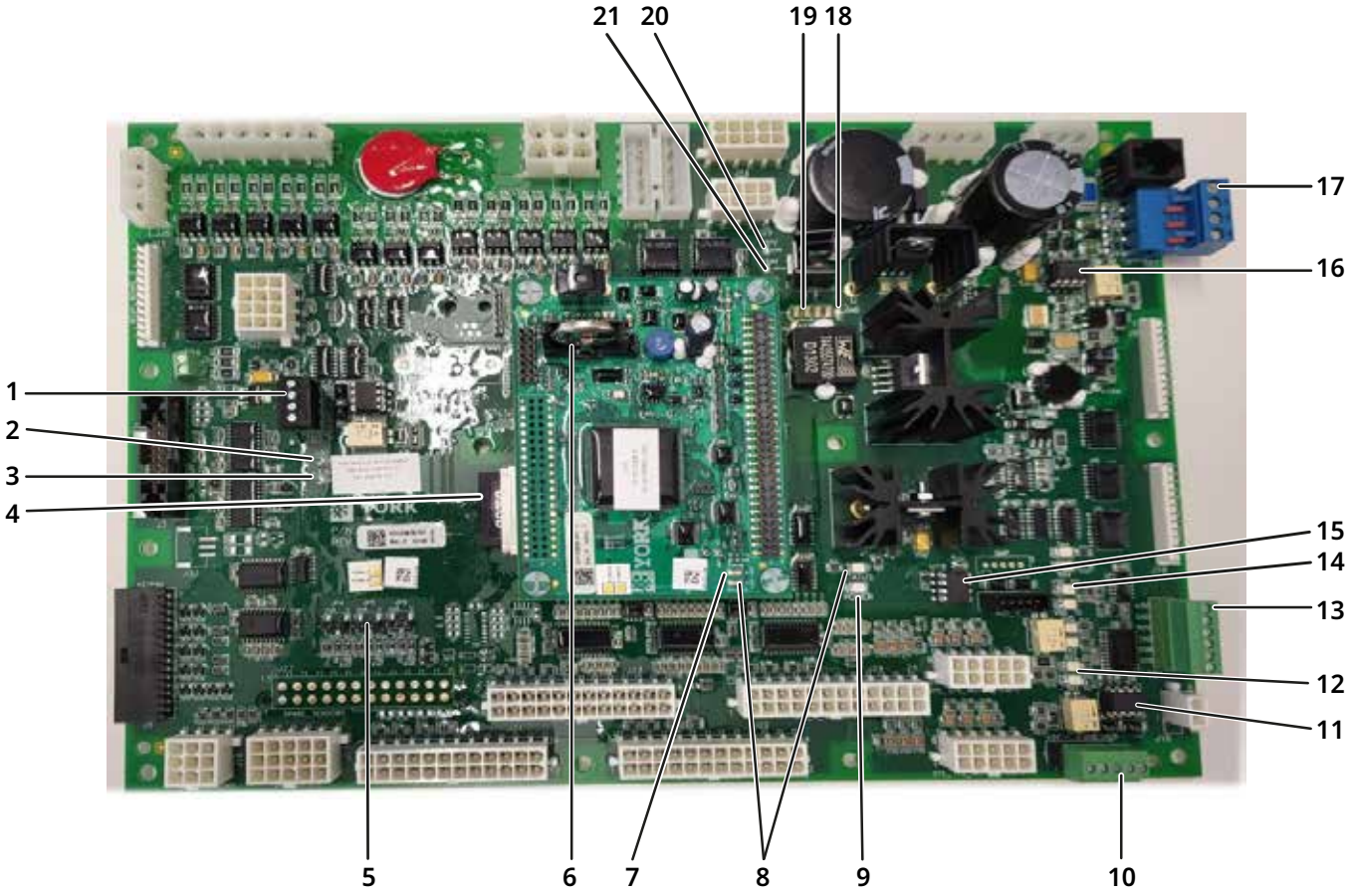

No.	Description	No.	Description	No.	Description
1	TB5 HMI Display	8	Status LED	15	U18 VSD RS-485 Driver
2	TP3 +5 V	9	Power LED	16	U26 Port 1 RS-485 Driver
3	TP2 +3.3 V	10	Port 2 RS485 Datalog	17	Port 1 SC-EQ
4	SD Card	11	U23 Port 2 RS-485 Driver	18	TP1 GND
5	JP4, JP5, JP6 Remote Setpoint Jumpers	12	Port 2 RX2, TX2	19	TP4 + 12 V
6	Battery	13	Port 2 RS-232 Printer	20	TP5 + 15 V
7	Power LED	14	VSD RX VSD-TX	21	TP10 + 24 V

Figure 31 - 331-03478-xxx microboard with IPU3 microprocessor

© 2025 Johnson Controls. All rights reserved.

Building automation system (BAS) communications

There are three different ways the chiller communicates to the BAS.

- Via board Native Communication protocols – IPU2 only
- Using an E-Link with chiller protocol – YorkTalk2 only
- Using an SC-EQ Communication Card – IPU2 or IPU3

Using communications protocol

TB3 Port 1 Native BAS RS-485 – IPU2 only.

SW1 RS-485 Biasing Switch for Port. Set to **On** if chiller is in an End of Line position on the network.

U26 is the Port 1 RS-485 Driver Chip. It is socketed to allow field replacement. RX1 and TX1 LEDs illuminate to indicate Port 1 communications activity.

YVAA native BAS communication setup – IPU2 only

Native communication is applicable to three types of protocols, they are BACnet, N2 and Modbus (RTU). It requires IPU2 Microboard (331-03478-101) and software version Y.ACS.20.02 or later.

BACnet MS/TP setup port 1 (TB3)

To set up the BACNET MS/TP Port 1, complete the following steps:

1. Connect the BACnet MS/TP Network to Port 1 on the IPU2 I/O Board.
2. Set up the YVAA Port 1 (P1) for BACnet Communications as shown in *Figure 120 on page 234*.

To access the Port communication parameters:

1. Press the PROGRAM key once.
2. Enter password 5255.
3. Press the ✓ ENTER key to display the Port 1 (P1) settings.

Then set:

1. DE Modifier Address (number entered is multiplied by 100): set as required by network.
2. DE Modifier Offset (number entered is added to DE Modifier Address): set as required by network. See the next note.
3. P1 Protocol: set to BACNET (Default Setting).
4. P1 Manual MAC Address: set to 1 (Default Setting).
5. P1 Baud rate: set as required by network. If notknown set to AUTO.
6. P1 Parity: set to NONE (Default Setting).
7. P1 Stop Bits: set to 1 (Default Setting).

NOTE

The BACnet DE Instance (Device Instance) is determined by adding the [DE MODIFIER ADDRESS x 100] with the DE MODIFIER OFFSET. That is, if the relevant DE Instance address is 5023, set the DE Modifier Address to 50, and then set the DE Modifier Offset to 23 (50 X 100 + 23 = 5023). DE Instances must be limited to values between 1 and 4,194,303 and every device in the network must have a unique Device Instance.

NOTE

You must always cycle power to the microboard following port setting changes.

N2 Metasys setup Port 1 (TB3)

1. Connect the N2 Network to Port 1 on the IPU2 I/O Board as shown in *Figure 120 on page 234*.
2. Set up the YVAA Port 1 (P1) for N2 Communications.

To access the communication parameters:

1. Press the PROGRAM key once
2. Enter password 5255
3. Press ✓ ENTER to display the Port 1 (P1) settings.

© 2025 Johnson Controls. All rights reserved.

Then set:

1. DE Modifier Address: N/A
2. DE Modifier Offset: N/A
3. P1 Protocol: Set to N2
4. P1 Manual MAC Address: Set to 0-127 as required by the parameters set in the BAS network.
5. P1 Baud Rate: 9600
6. P1 Parity: None (Default Setting)
7. P1 Stop Bits 1: (Default Setting)

MODBUS (RTU) setup port 2 (IPU2 only)

NOTE

The YVAA 03478 microboard supports Modbus RS232 or RS485 communications for Port 2 communications. Port 2 communications can be directed to either TB1 for RS232 or TB2 for RS485. To connect to the network.

1. Connect your Modbus Network to Port 2 on the IPU2 I/O Board as shown in *Figure 120 on page 234*.
2. Set up the YVAA Port 2 (P2) for Modbus Communications.

To access the communication parameters:

1. Press the PROGRAM key once.
2. Enter the password 5255.
3. Press the ✓ ENTER key to display the Port 1 (P1) settings.

Set the following parameters:

1. DE Modifier Address: Set to 1
2. DE Modifier Offset: Set to 0
3. P1 Protocol: Set to API
4. P2 Protocol: Set to Modbus Server
5. P2 Manual MAC Address: Set to 0-127 (as required by Modbus network)
6. P2 Baud rate: Set to 19.2K (or as required by the Modbus network)
7. P2 Parity: Set to NONE (or as required by Modbus network)
8. P2 Stop Bits: Set to 1
9. P2 Hw Select Bit: Set to RS-485 or RS-232 (as required by Modbus network)
10. Cycle power to the Microboard following port setups.
11. J13-5 Remote Stop Start must be closed for BAS remote commands to take effect. If this input is open the unit will shut down and the panel will display the message:

REMOTE STOP - NO RUN PERMISSIVE

E-Link or SC-EQ interface using YorkTalk Protocol

To communicate to an E-link or SC-EQ communication card the chiller control board uses YorkTalk chiller communication protocols. This is a Johnson Controls proprietary protocol.

There are two types of YorkTalk Protocol, **YorkTalk2** and **YorkTalk3**.

The IPU2 processor uses YorkTalk2 only to communicate the E-link and SC-EQ. The E-link supports YorkTalk2 chiller protocol only.

The IPU3 use YorkTalk2, YorkTalk3 and YorkTalk3 Legacy protocols. The E-link only uses YorkTalk2 protocol. See *Table 48 on page 239* for the breakdown of communication protocols and point mapping.

NOTE

Reboot required (cycle power) after settings are changed.

© 2025 Johnson Controls. All rights reserved.

The following table shows setup requirements for each communication protocol.

Table 11 - Values required for BAS communication: IPU2 only

Setting description	Native BAS Protocol			Chiller Protocol
	BACnet MS/TP	Modbus RTU [5]	N2	YorkTalk2 [5]
DE modifier address	0 to 41943 [3]	1	N/A	-1
DE modifier offset	0 to 99 [4]	0	N/A	–
P1 protocol	BACNET	–	N2	–
P1 manual MAC address	0-127 [1]	–	0-127 [1]	–
P1 baud rate	9600 To 76800 or Auto Selectable [1]	–	9600 or 19200	–
P1 parity	NONE	–	NONE	–
P1 stop bits	1	–	1	–
P2 protocol	N/A	MODBUS SVR	N/A	–
P2 manual MAC address	N/A	0-127 [1]	N/A	–
P2 baud rate	N/A	19,200 [2]	N/A	–
P2 parity	N/A	NONE [2]	N/A	–
P2 stop bits	N/A	1	N/A	–
P2 HW select bit	N/A	RS-485 or RS-232 [1]	N/A	–
Reset real time error	N/A	N/A	N/A	–
Chiller ID	N/A	N/A	N/A	0

Notes:
1.As required by network.
2.Or other as required by network.
3.Number is multiplied by 100, set as required by network.
4. Number is added to de modifier address, set as required by network.
5. E-Link or SC-EQ interface requires YorkTalk2 setup.

NOTE

For the current SC-EQ or E-link data map for the YVAA chiller, refer to:
YVAA / YVFA / YAGK BAS SC-EQ
YVAA / YVFA / YAGK (YT3) BAS SC-EQ, or
YVAA / YVFA / YAGK BAS E-Link points lists
The points lists are available on the Chillers Knowledge Exchange***.***
For more information, contact your local Johnson Controls branch office.

© 2025 Johnson Controls. All rights reserved.

Table 12 - Communication protocols and point mapping

YVAA / YVFA / YAGK Chiller / BAS Protocols			
Communication Protocol	**IPU2 Controller**	**IPU3 Controller**	**BAS Mapping**
Native (OPEN PROTOCOL)	BACnet, MODBUS, N2 (SC-EQ not required)	NA	Native BAS
YorkTalk2 (Chiller)	SC-EQ \ E-link	SC-EQ \ E-link	SC-EQ \ E-link
YorkTalk3 (Chiller)	NA	SC-EQ only	SC-EQ only
YorkTalk3 Legacy (Chiller)	NA	SC-EQ only	Native BAS

The IPU3 supports the Johnson Controls internal chiller protocols YorkTalk2, YorkTalk3 & Legacy protocols. The SC-EQ connects EQ port J8 to TB3 on the 03478 I/O board. The IPU3 does not support Native BAS Communication.

Because the IPU3 uses only YorkTalk communication protocol, the old port configuration settings using passcode 5255 is no longer used. The only selection that needs to be made is the selection of YorkTalk2, YorkTalk3 or Legacy protocols. The SC-EQ will auto-discover the chiller based on the selected YorkTalk protocol. Legacy protocol was added to the IPU3 and equipment models for SC-EQ to allow for Native point mapping to match.

TB2 is the Port 2 RS-485 E-Link Communications Port. RX2 and TX2 LEDs illuminate to indicate the Port 2 communications activity. U23 is the Port 2 RS- 485 Driver Chip. It is socketed to allow field replacement. J16 provides +12 VDC to power the E-LINK.

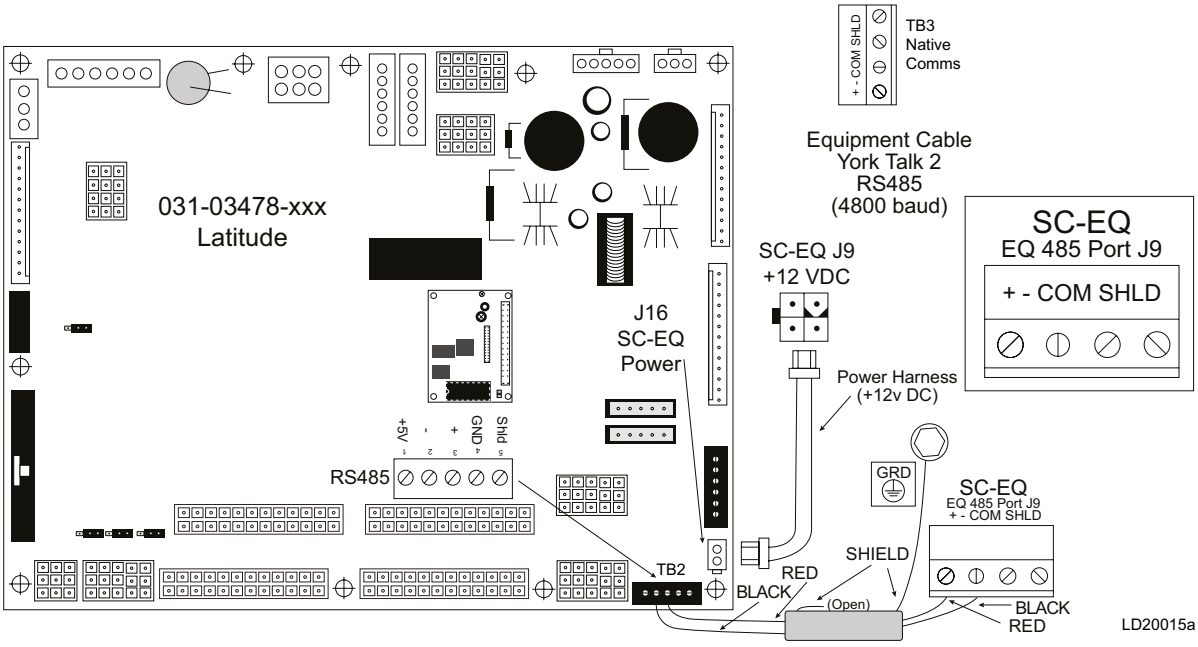

Figure 32 - SC-EQ Communication Card Connections for chillers with the 03478 microboard and **IPU2** processor YCAV / YCIV / YVAA / YVWA / YVFA

© 2025 Johnson Controls. All rights reserved.

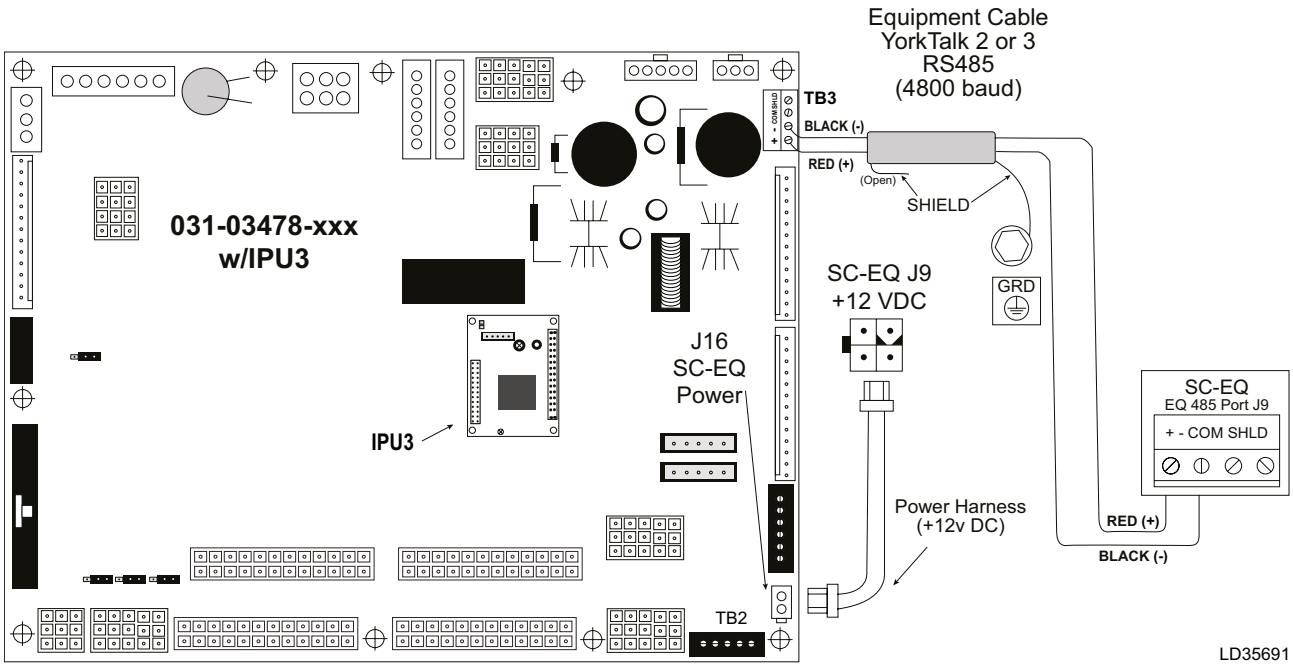

Figure 33 - SC-EQ Communication Card Connections for chillers with the 03478 microboard and **IPU3** processor YCAV / YCIV / YVAA / YVWA / YVFA

NOTE

The most current data map information is listed on the Johnson Controls/York Chiller Equipment Integration website. A copy of the data map can also be obtained by contacting your local Johnson Controls office.

NOTE

Reboot required (cycle power) after settings are changed.

7

© 2025 Johnson Controls. All rights reserved.

VSD

J2 VSD#1 and J1 VSD#2 connections headers for RS-485 communications to the VSDs.

VSD RX and VSD TX LEDs illuminate to indicate the VSD communications activity. U18 is the VSD Port RS-485 Driver Chip. It is socketed to allow field replacement.

Program update / SD card features IPU2

Program update – IPU2 only

The Application software is stored in the IPU2 Flash memory. Copying a new version of software from the SD Flash card changes the IPU2 Flash. The new application software must be named SOFTWARE. ELF. This file must be located in the root directory of the SD Flash card. Be sure to allow enough time for the software to update properly.

To update the program, complete the following steps:

1. Copy the new software in to the root directory of the SD card.
2. Rename this new program file SOFTWARE.ELF.
3. Turn the power **Off** to the IPU2 control board.
4. Insert the SD card in to the SD card Reader/Writer slot.
5. Press the OPTIONS key and then press the Down Arrow key until FLASH CARD UPDATE DISABLED is displayed.
6. Press the RIGHT ARROW key to change the DISABLED to ENABLED
7. Press the ENTER key to start the update. Once pressed the following message is displayed until the update has been completed.

FLASH CARD UPDATING. PLEASE WAIT...

   The keypad and display does not respond during the flash update. After the software is finished updating, the controller automatically reboots.

8. If an error occurs during the update, an error message will be displayed where XX is the Error Code. See *Table 13 on page 130* for error code definitions.
9. After the update is completed and the controller reboots, the keypad and display return to full functionality. The SD card may be left in place for data logging or else replaced with another SD card dedicated for data logging.
10. To remove the SD card, gently press the card in slightly then release the pressure. The card pops out slightly to allow removal.
11. After updating the software turn **Off** the power, insert a properly formatted SD card, then turn the power back **On** to the IPU2 control board.
12. Ensure data logging is active by accessing under the Service mode.

WARNING

Never reset or power down the chiller until the update is finished. Interrupting the flash update procedure can corrupt the program file and render the control board inoperative.

Table 13 - Flash card update error XXXXX

Flash card update error code	Definition
0	Okay
10	Flash card not found.
11	SOFTWARE.ELF file not found
14	SOFTWARE.ELF file larger than expected.
15	RAM to IPU Flash transfer of DATABASE. ELF failed.
16	RAM to IPU Flash transfer of SOFTWARE.ELF failed.
17	Could not allocate sufficient memory to read or write file.
99	Internal software error.

© 2025 Johnson Controls. All rights reserved.

Data logging – IPU2

A 2 GB SD card (p/n 031-03466-000) may be inserted into the 03478 IPU2 SD card slot to record the chiller operating parameters at 5 second intervals. The data is stored in a folder named RMYYYYMM where YYYY is the year and MM is the month the data was recorded. The controller creates a file for each day within this folder with the format YYYYMMDD.csv where DD equals the day of the month in addition to the Y Year and M Month fields. For example: The folder named RM201503 is a folder created in March of 2015. Within this folder would be a file for each day of that month that the data logging is running. If a review of the History Report shows that an abnormal event occurred on March 3rd at 2:05pm, the user can import the 20150303.csv file into Excel and look at the system parameter details leading up to the 2:05pm event.

CAUTION

Follow all Johnson Controls Safety Directives when inserting or removing the SD card since the card is located inside the control cabinet.

To start the Data Logging, insert the SD card into the SD card slot on the 03478 IPU2 board. The label on the SD card should be facing outwards.

Once the SD card is inserted and the unit is powered up, press the OPTIONS key. Then press the ▼ key to advance to the DATA LOG TO FLASHCARD selection. Next press the ► key to select **On** then press the ✓ ENTER key to start the Data Log. A 2 GB SD card will hold about 8 months worth of data. A smaller card may be used that will hold less data but should be tested for compatibility. The controller operating system does not support SD cards larger than 2 GB. When the SD card becomes full, the oldest date file is automatically deleted and a new day log file is written in its place.

To stop the data logging and retrieve the SD card, press the OPTION key and then the ▼ key to display the DATA LOG TO FLASHCARD option and then use the ► key to select **Off** then press the ✓ ENTER key.

Again, follow the Johnson Controls Safety Directives to stop the chiller, power **Off** the unit and open the control cabinet door to retrieve the SD card.

Once inside the control cabinet, lightly press in on the SD card and then release the pressure. The SD card should pop out slightly to allow removal. You may then copy the files to a PC for analysis or email the file to someone. The files are saved as a CSV format which can be read by Excel.

NOTE

Beginning with V20 software, the chiller control board must be power cycled with the SD card inserted to initiate data logging.

CAUTION

Removing the SD card with power to the control board could possibly damage the SD card or the control boards.

Program update / SD card features IPU3

Program update – IPU3

To update the Program:

1. If replacing a micro board, record all set points and configuration settings then Power off the unit.
2. Insert the program card into the SD card slot J31 or USB port on IPU3.

- **Note:** The software filename format Y.ACS.30.XX.bin does **not** need to be changed. XX is the software version number and is updated when a new version of software is released

3. Place the Unit Switch in the **Off** position.
4. Power **On** the unit. If the program automatically loads, skip to step 8, if not then go to step 5.
5. Enter UNIT SETUP MODE [PROGRAM - 4245] then press the ▼ key until UPDATE SOFTWARE is displayed.
6. Press the ► key to change the DISABLED to SD or USB depending on which device is being used to provide the update file.
7. Press the ✓ ENTER key to start the update. Once the ✓ ENTER key is pressed the message SOFTWARE UPDATE IN PROGRESS PLEASE WAIT . . . is displayed until the update has been completed. The keypad and display will not respond during the flash update.

© 2025 Johnson Controls. All rights reserved.

8. controller will automatically reboot, load and run the new software. Data Logging should start automatically after software upload. Verify data logging is active by accessing Data Logging Status under the Service Key.

If an error occurs during the update, an error message will be displayed where XXXX is the Error Code.

NOTE

The chiller control board must be power cycled with the 2 GB SD card inserted to initiate data logging.

CAUTION

Do not reset or power down the chiller until the update is finished. Interrupting the Software Update procedure can corrupt the program file and render the control board inoperative.

Table 14 - Software update errors

Software Update Errors	
Error message	**Definition**
MORE THAN ONE FILE FOUND	more than on *.bin file on selected device
FILE NOT FOUND	*.bin file not on selected device
FILE NOT ABLE TO BE LOADED	*.bin file not able to be loaded to flash
SELECTED DEVICE NOT FOUND	update attempted without SD or USB

Table 15 - Flash errors

Flash Errors	Error Code (XX)
FILE_BUFFER_APP_HEADER_READ	90
CANNOT_CALCULATE_BUFFER_DATA_CRC	91
BAD_FILE_BUFFER_DATA_CRC	92
SFLASH_DEVICE_WRITE	93
BAD_SFLASH_CRC	94
APP_CODE_TOO_BIG	95
SPI_FLASH_APP_NOT_PRESENT	96
SPI_FLASH_READ_ERROR	97
CANNOT_READ_DEVICE_CONFIGURATION	98

Data logging – IPU3

Data logging starts automatically on unit power up. The data logs are written to the root directory of the 32 GB SD card at an interval defined by data logging time in unit setup mode. Data logging does not start without a 32 GB SD card installed.

The root directory has folders for each month named RMyyyymm (year and month). Inside each monthly folder the daily CSV files named yyyymmdd.csv (year, month, and day) are stored

The first row of the file is the header text. The remaining rows contain the data captured at the specified interval of the programmed data log time.

If data logging stops and then restarts the same day, the new data is appended to the existing file.

Verify that data logging has started by accessing the status of is reported in service mode: **ACTIVE or **INACTIVE**

In case of a logging error, the software attempts a single re-mount of the 32 GB SD card file system.

NOTE

The chiller control board must be power cycled with the 32 GB SD card inserted to initiate data logging.

NOTE

It is necessary to have an empty 32 GB SD Card, or one that only contains the software image, for data logging for the initial install of 32 GB SD card to ensure the logging starts correctly.

NOTE

The USB port is used only for loading chiller control and HMI software. It cannot be used for data logging.

CAUTION

Removing the SD card with power to the control board could possibly damage the SD card or the control boards.

© 2025 Johnson Controls. All rights reserved.

Table 16 - Data logging IPU2 and IPU3

Data Number	Header		Data	
	Text	Unit	Format	Value Description
1	YEAR	YEAR	x	Year
2	MONTH	MONTH	x	Month
3	DAY	DAY	x	Day
4	HOUR	HOUR	x	Hour
5	MIN	MIN	x	Minute
6	SECOND	SEC	x	Second
7	ELAPSE_TIME	SEC	x	Second
8	1_SUCT_PRS	PSIG	x.x	Sys 1 Suction Pressure
9	1_DIS_PRS	PSIG	x.x	Sys 1 Discharge Pressure
10	1_OIL_PRS	PSIG	x.x	Sys 1 Oil Pressure
11	1_COND_TMP	°F	x.x	Sys 1 Condenser Temperature
12	1_COND_STMP	°F	x.x	Sys 1 Saturated Condenser Liquid Temp
13	1_SUBCOOL	°F	x.x	Sys 1 Subcooling, Microchannel
14	1_MTR_FLA	AMPS	x	Sys 1 Motor Current (%FLA)
15	1_DIS_TMP	°F	x.x	Sys 1 Discharge Temperature
16	1_DIS_STMP	°F	x.x	Sys 1 Saturated Discharge Temperature
17	1_DIS_SH	°F	x.x	Sys 1 Discharge Superheat
18	1_EDUC_TMP	°F	x.x	Sys 1 Eductor Temperature, Aggreko Disabled
19	1_VSD_RUN	--	x	Sys 1 VSD Compressor Run Status
20	1_FAN_STG	--	x	Sys 1 Condenser Fan Stage
21	1_FAN_SPD	%	x	Sys 1 Condenser Fan Speed, VSD Fans
22	1_MTR_TMP1	°F	x.x	Sys 1 Motor Temp 1, if not set to ignore
23	1_MTR_TMP2	°F	x.x	Sys 1 Motor Temp 2, if not set to ignore
24	1_MTR_TMP3	°F	x.x	Sys 1 Motor Temp 3, if not set to ignore
25	1_COND_EEV	%	x.x	Sys 1 Condenser Drain Command
26	1_ECON_EEV	%	x.x	Sys 1 Economizer Valve Command
27	1_EVP_LVL_SP	%	x.x	Sys 1 Evaporator Level Control Set Point, Round Tube
28	1_EVP_LVL	%	x.x	Sys 1 Evaporator Liquid Level, Round Tube
29	1_FT_LIQ_TEMP	°F	x.x	Sys 1 Flash Tank Liquid Temperature, FCOL/C
30	1_FT_LVL	--	x	Sys 1 Flash Tank Level (0=Low,1=High)
31	1_F_MFS	%	x	Sys 1 Maximum Cond Fan Speed , FCCL/OL
32	1_F_TPF	--	x.x	Sys 1 FC Tons Per Fan, FCCL/OL
33	1_F_TPS	--	x.x	Sys 1 FC Tons Per System, FCCL/OL
34	1_F_MTPS	--	x.x	Sys 1 Mechanical Tons Per System, FCCL/OL
35	1_F_MTPF	--	x.x	Sys 1 Mechanical Tons Per Fan, FCCL/OL
36	1_F_TL	--	x.x	Sys 1 System Total Load, FCCL/OL
37	1_F_OFS	%	x	Sys 1 FC Optimum Fan Speed, FCCL/OL
38	1_OP_CODE	--	x	Sys 1 Operational Code
39	1_FLT_CODE	--	x	Sys 1 Fault Code
40	1_AR_TIMER	SEC	x	Sys 1 Anti-Recycle Time
41	1_RUN_TIME	SEC	x	Sys 1 Run Time
42	2_SUCT_PRS	PSIG	x.x	Sys 2 Suction Pressure

Note: These tables are subject to change.

© 2025 Johnson Controls. All rights reserved.

Table 16: Data logging IPU2 and IPU3, continued

Data Number	Header		Data	
	Text	Unit	Format	Value Description
43	2_DIS_PRS	PSIG	x.x	Sys 2 Discharge Pressure
44	2_OIL_PRS	PSIG	x.x	Sys 2 Oil Pressure
45	2_COND_TMP	°F	x.x	Sys 2 Condenser Temperature
46	2_COND_STMP	°F	x.x	Sys 2 Saturated Condenser Liquid Temp
47	2_SUBCOOL	°F	x.x	Sys 2 Subcooling, Microchannel
48	2_MTR_FLA	AMPS	x	Sys 2 Motor Current (%FLA)
49	2_DIS_TMP	°F	x.x	Sys 2 Discharge Temperature
50	2_DIS_STMP	°F	x.x	Sys 2 Saturated Discharge Temperature
51	2_DIS_SH	°F	x.x	Sys 2 Discharge Superheat
52	2_EDUC_TMP	°F	x.x	Sys 2 Eductor Temperature, Aggreko Disabled
53	2_VSD_RUN	--	x	Sys 2 VSD Compressor Run Status
54	2_FAN_STG	--	x	Sys 2 Condenser Fan Stage
55	2_FAN_SPD	%	x	Sys 2 Condenser Fan Speed, VSD Fans
56	2_MTR_TMP1	°F	x.x	Sys 2 Motor Temp 1, if not set to ignore
57	2_MTR_TMP2	°F	x.x	Sys 2 Motor Temp 2, if not set to ignore
58	2_MTR_TMP3	°F	x.x	Sys 2 Motor Temp 3, if not set to ignore
59	2_COND_EEV	%	x.x	Sys 2 Condenser Drain Command
60	2_ECON_EEV	%	x.x	Sys 2 Economizer Valve Command
61	2_EVP_LVL_SP	%	x.x	Sys 2 Evaporator Level Control Set Point, Round Tube
62	2_EVP_LVL	%	x.x	Sys 2 Evaporator Liquid Level, Round Tube
63	2_FT_LIQ_TEMP	°F	x.x	Sys 2 Flash Tank Liquid Temperature, FCOL/CL
64	2_FT_LVL	--	x	Sys 2 Flash Tank Level (0=Low,1=High)
65	2_F_MFS	%	x	Sys 2 Maximum Cond Fan Speed, FCCL/OL
66	2_F_TPF	--	x.x	Sys 2 FC Tons Per Fan, FCCL/OL
67	2_F_TPS	--	x.x	Sys 2 FC Tons Per System, FCCL/OL
68	2_F_MTPS	--	x.x	Sys 2 Mechanical Tons Per System, FCCL/OL
69	2_F_MTPF	--	x.x	Sys 2 Mechanical Tons Per Fan, FCCL/OL
70	2_F_TL	--	x.x	Sys 2 System Total Load, FCCL/OL
71	2_F_OFS	%	x	Sys 2 FC Optimum Fan Speed, FCCL/OL
72	2_OP_CODE	--	x	Sys 2 Operational Code
73	2_FLT_CODE	--	x	Sys 2 Fault Code
74	2_AR_TIMER	SEC	x	Sys 2 Anti-Recycle Time
75	2_RUN_TIME	SEC	x	Sys 2 Run Time
76	LCHLT	°F	x.x	Leaving Chilled Liquid Temperature
77	LCHLT_SETP	°F	x.x	Leaving Chilled Liquid Temperature Set Point
78	ECHLT	°F	x.x	Return Chilled Liquid Temperature
79	EVAP_ELT	°F	x.x	Evaporator Entering Liquid Temperature, FCCL/OL
80	AMB_TMP	°F	x.x	Ambient Air Temperature
81	VSD_ACT_FREQ	Hz	x.x	VSD Output Frequency
82	VSD_CMD_FREQ	Hz	x.x	VSD Command Frequency
83	VSD_DC_BUS	VOLTS	x	VSD DC Bus Voltage VSD DC Bus Voltage 1, Frame E/F

Note: These tables are subject to change.

© 2025 Johnson Controls. All rights reserved.

Table 16: Data logging IPU2 and IPU3, continued

Data Number	Header		Data	
	Text	Unit	Format	Value Description
84	VSD_AMBTMP	°F	x.x	VSD Internal Ambient Temperature
85	VSD_PCHARGE	--	x	VSD Precharge Relay Status
86	VSD_PUMP	--	x	VSD Cooling Fan/Pump
87	VSD_BPTMPT1	°F	x.x	Sys 1 VSD IGBT Baseplate Temperature
88	VSD_BPTMPT2	°F	x.x	Sys 2 VSD IGBT Baseplate Temperature
89	VSD_1_OLOAD	--	x	VSD Sys1 Overload Setting
90	VSD_2_OLOAD	--	x	VSD Sys2 Overload Setting
91	FC_VALVE	--	x	Free Cooling Valve (0=Closed, 1=Open), FCO
92	FC_MODE	--	x	Free Cooling Mode (0=Mechanical, 1=Free Cooling, 2=Hybrid), FCCL/OL
93	F_UTL	--	x.x	Unit Total Load, FCCL/OL
94	CC_BYP_VALVE	%	x.x	Cooling Coil Bypass Valve, FCCL
95	CC_VALVE	%	x.x	Cooling Coil Valve, FCCL
96	CC_TEMP	°F	x.x	Cooling Coil Temperature, FCCL
97	HX_LVE_TEMP	°F	x.x	Heat Exchanger Leaving Temperature, FCCL
98	HX_ENT_TEMP	°F	x.x	Heat Exchanger Entering Temperature, FCCL
99	GLY_PMP_RUN	--	x	Glycol Pump Run (0=Off, 1=On), FCCL
100	GLY_PMP_SPD	%	x.x	Glycol Pump Speed, FCCL
101	FC_CL_STATE	--	x	Free Cooling Closed Loop State from CC_Output. FreeCooling Out Bus, FCCL
102	GLYCOL_HTR	--	x	Glycol Heater (0=Off, 1=On), FCCL
103	1_VSD_FAN_STATE	--	x	"Sys 1 Fan Control State, Optimized VSD Fans 0 = Off 1 = CS_EQ 2 = High Amb. Override 3 = Low Amb. Override 4 = Low Oil Press. Limit 5 = Low Discharge Press. Limit 6 = High Discharge Press. Limit 7 = Ramp from Limiting to CS_EQ 8 = Flash Tank Override 9 = Free Cooling Fuzzy Logic "
104	2_VSD_FAN_STATE	--	x	"Sys 2 Fan Control State, Optimized VSD Fans 0 = Off 1 = CS_EQ 2 = High Amb. Override 3 = Low Amb. Override 4 = Low Oil Press. Limit 5 = Low Discharge Press. Limit 6 = High Discharge Press. Limit 7 = Ramp from Limiting to CS_EQ 8 = Flash Tank Override 9 = Free Cooling Fuzzy Logic "
105	1_ACT_SUBCOOL_SET	°F	x.x	Sys 1 Active Subcooling Set Point, Microchannel
106	2_ACT_SUBCOOL_ SETP	°F	x.x	Sys 2 Active Subcooling Set Point, Microchannel

Note: These tables are subject to change.

© 2025 Johnson Controls. All rights reserved.

Table 16: Data logging IPU2 and IPU3, continued

Data Number	Header		Data	
	Text	Unit	Format	Value Description
107	1_SUCT_TMP	°F	x.x	Sys 1 Suction Temperature, Aggreko Enabled
108	1_SAT_SUCT_TMP	°F	x.x	Sys 1 Saturated Suction Temperature, Aggreko Enabled
109	1_SUCT_SHEAT	°F	x.x	Sys 1 Suction Superheat, Aggreko Enabled
110	20 1_ACT_SHEAT_ SETP	°F	x.x	Sys 1 Active Suction Superheat Set Point, Aggreko Enabled
111	21 1_FTDV_CMD	%	x.x	Sys 1 Flash Tank Drain Valve Command, Aggreko Enabled
112	1_FTDV_STATE	--	x	"Sys 1 Flash Tank Drain Valve State, Aggreko Enabled 0 = Undefined 1 = Disabled (unused) 2 = Manual 3 = Auto Inactive 4 = Auto Startup Hold 5 = Auto Set Point Ramp 6 = Auto PID Control 7 = Auto Hold 8 = Auto Superheat PID Control 9 = Auto Discharge Temperature PID Control"
113	2_SUCT_TMP	°F	x.x	Sys 2 Suction Temperature, Aggreko Enabled
114	2_SAT_SUCT_TMP	°F	x.x	Sys 2 Saturated Suction Temperature, Aggreko Enabled
115	2_SUCT_SHEAT	°F	x.x	Sys 2 Suction Superheat, Aggreko Enabled
116	2_ACT_SHEAT_SETP	°F	x.x	Sys 2 Active Suction Superheat Set Point, Aggreko Enabled
117	2_FTDV_CMD	%	x.x	Sys 2 Flash Tank Drain Valve Command, Aggreko Enabled
118	2_FTDV_STATE	--	x	"Sys 2 Flash Tank Drain Valve State, Aggreko Enabled 0 = Undefined 1 = Disabled (unused) 2 = Manual 3 = Auto Inactive 4 = Auto Startup Hold 5 = Auto Set Point Ramp 6 = Auto PID Control 7 = Auto Hold 8 = Auto Superheat PID Control 9 = Auto Discharge Temperature PID Contro"
119	INPUT_CURR	AMPS	x	Unit Input Current AMPS, Input Current Limiting Enabled
120	1_ACT_DSCH_TMP_ SETP	°F	x.x	Sys 1 Active Discharge Temperature Set Point, Aggreko Enabled
121	2_ACT_DSCH_TMP_ SETP	°F	x.x	Sys 2 Active Discharge Temperature Set Point, Aggreko Enabled
122	1_FAN_KW	--	x.x	Sys 1 Fan kW
123	2_FAN_KW	--	x.x	Sys 2 Fan kW
124	1_COMP_KW	--	x.x	Sys 1 Compressor kW
125	2_COMP_KW	--	x.x	Sys 2 Compressor kW
126	VSD_DC_BUS2	VOLTS	x	VSD DC Bus Voltage 2, Frame E/F

Note: These tables are subject to change.

© 2025 Johnson Controls. All rights reserved.

System Backup and Restore

System Backup and Restore (HMI ONLY)

Backup and Restore functionality can only be used for chillers with HMI displays.

- The system can save and restore all NOVRAM data to/from an SD card. This can happen automatically or manually. The SD card space is shared with data logging and space is allocated specifically for system backup
- The System Backup includes all NOVRAM data and the date and time of the backup. The filename of the backup includes unit serial number and control software version number. Only one backup file is created in the SD card

The filename format is shown below:

Filename:
DDDDDDDDDDDD_VVVVVVVVVVVV.ipb

- DDDDDDDDDDDD = Unit Serial Number (use 0 if blank).
- VVVVVVVVVVVV + Control Software Version.

Automatic/Manual Backup

- Automatic backup happens at midnight when the follow in true:
  - An SD card is inserted.
  - The SD card is not write-protected.
  - The SD card has no errors.

Manual Backup

- Users can trigger a backup by pressing the System Backup button on the SD Card Screen.

Backup Validation

- Backup data is retrieved from the SD card if:
  - A system backup file exists.
  - The file is valid and compatible with the control board version.
- Backup information updates:
  - When the SD card is inserted.
  - After a manual or automatic backup.

Restore Function

- Users can restore NOVRAM data by pressing the System Restore button on the SD Card Screen.
- The system uses the most recent backup file if multiple files exist on the SD card.
- After restoring:
  - The system logs off to View Access.
  - The system reboots automatically.

Export Reports to SD Card

This feature is available on only chillers using the IPU3 processor with software V05 or later.

These reports can be a very useful tool in troubleshooting issues and it is **highly recommended** to download the report when working on startups or service issues.

This selection is only displayed when the Unit Switch has been turned off and the Service Mode is active. The selections are:

- None
- All Reports

If None is entered or the Cancel key is pressed, no action is taken.

When All Reports is selected the reports below are exported to the 32 GB SD card:

- Setpoints Report
- Operating Data Report
- Normal Shutdowns Report
- All Histories Report
- Access Log Reports
- Security Log Reports (only for chillers with HMI Display/YCAM)

The selection reverts to **None** each time the menu is accessed.

© 2025 Johnson Controls. All rights reserved.

The reports are exported to a single file on the SD card and the name consists of the chiller serial number and chiller software version number appended with the text **Reports.txt**. For example, if the chiller serial number is 0000RANX000000 and the chiller software version is Y.ACS.30.06 the file name will be: **0000RANX000000_YACS3006_Reports.txt**

Only one Reports.txt file is created on the SD card. If the SD card is missing, has errors, or is full, the export is cancelled.

During the **All Reports** process a separate VSD diagnostic report is created. The file name includes the chiller type and serial number. For example, if the chiller is a YVAA with the serial number 0000RANX000000 the file name will be:
YVAA_0000RANX000000_VSD.txt

Security Log Record (HMI Only)

Any time a setpoint (programmable value) is changed by chiller panels with HMI only, the following information is recorded.

- Setpoint Name
- Time
- Date
- Access Level
- Access ID
- Old Value
- New Value

The log stores the past 75 events, using a first-in-first-out procedure. Log Entry 1 contains the newest entry. The data is stored in NOVRAM so that it is preserved through power cycles. This feature cannot be disabled.

The Security Log shall be cleared when the user performs a Clear History action or an Erase All NOVRAM action.

© 2025 Johnson Controls. All rights reserved.

Unit warning

Unit warning operation

Unit warnings are caused when a condition is present requiring operator intervention to restart the unit. All setpoints, program values, and options should be checked before operating the unit. Warnings are not logged to the history buffer. If a unit warning is in effect, the message will be displayed to the operator when the STATUS key is pressed.

Low battery warning

The LOW BATTERY WARNING can only occur at unit power-up. On micropanel power-up, the RTC battery is checked to see if it is still operational. If it is, normal unit operation is allowed. If the battery voltage is determined to be low, the following warning message is displayed indefinitely.

```
UNIT WARNING: !! LOW BATTERY !!
 CHECK SETPOINTS/PROGRAM/OPTIONS/TIME
```

If a low battery condition exists, all programmed set points, program values, time, schedule, and history buffers will have been lost. These values are all reset to their default values, which may not be the correct operating values. After a bad battery is detected, the unit is prevented from running until the manual override key is pressed. After pressing the manual override key, the anti recycle timers is set to the programmed default anti-recycle time to allow the operator sufficient time to check setpoints, program values, and other relevant values.

If a low battery is detected, relpace it as soon as possible. The programmed values will all be lost and the unit will be prevented from running on the next power interruption.

Invalid number of compressors warning

The INVALID NUMBER OF COMPRESSORS SELECTED warning will occur after the VSD has been initialized, if no jumpers are installed or if more than 1 jumper is installed, Number of Compressors Select message is displayed. The following warning message will be displayed indefinitely.

```
UNIT WARNING:
 INVALID NUMBER OF COMPRESSORS SELECTED
```

To clear this warning, both the control panel and VSD control voltage must be turned OFF and the jumpers properly installed in the VSD wiring harness.

NOTE

These jumpers are factory installed in the wire harness plug and should not require changes.

Invalid serial number warning

If the INVALID SERIAL NUMBER message appears, immediately contact Johnson Controls Product Technical Support. The appearance of this message may mean the chiller has lost important factory programmed information. The serial number can be entered using the SERVICE key.

```
UNIT WARNING: INVALID SERIAL NUMBER
 ENTER UNIT SERIAL NUMBER
```

This status message can be bypassed to view additional messages under the STATUS key by pressing the STATUS key repeatedly to scroll through as many as three STATUS messages that could possibly be displayed at any time.

Unit safeties

Unit safety operation

Unit faults are safeties that cause all running compressors to be shut down, if a safety threshold is exceeded for 3 seconds. Unit faults are recorded in the history buffer along with all data on the unit and system operating conditions. Unit faults are auto reset faults where the unit will be allowed to restart automatically after the fault condition is no longer present. The only exception is any of the VSD related unit faults. If any 3 VSD unit faults occur within 90 minutes, the unit will be locked out on the last fault. A VSD lockout condition requires a manual reset using the system switches. Both system switches must be cycled OFF and ON to clear a VSD unit lockout fault. If a unit safety is in effect, the message will be displayed to the operator when the STATUS key is pressed.

In the descriptions of the fault displays that follow, the fault message will show a YYYYYYY to indicate that a system is in a FAULT condition and will restart when the fault clears or LOCKOUT and will not restart until the operator clears the fault using the keypad.

If a control panel safety occurs after the VSD fault, but before the fault is reset, the control panel fault is an ALL FAULT of the VSD fault, meaning it will be registered as such in the History because it occurred while the VSD was shutting down or while the systems

© 2025 Johnson Controls. All rights reserved.

were shut down. All faults do not store operating data at the time of the fault.

If a VSD fault occurs during the fault rampdown or while the systems are shut down, the VSD fault will be registered as a new fault. The reason for this is the belief any VSD fault should be registered with a full account of the systems data at the time of the fault.

High ambient temp fault

If the ambient temperature rises above 55°C (131°F), the chiller will shut down with a controlled ramped shutdown. Restart will automatically occur, if demand allows, when temperature falls 1.1°C (2°F) below the cutout (53.9°C [129°F]). This fault cannot cause a lockout. The fault display message will be present only during the time when the ambient temperature is causing a fault condition. The following is a sample display:

```
UNIT YYYYYYYY
 HIGH AMBIENT TEMP
```

The unit will also be inhibited from starting any time the temperature is above 53.9°C (129°F).

Low ambient temp fault

If the ambient temperature falls below the programmable Low Ambient Temp Cutout the chiller will shut down with a controlled ramped shutdown. This fault will only occur if the Low Ambient Cutout is ENABLED under the OPTIONS key. Restart can occur, if demand allows, when temperature rises 1.1°C (2°F) above the cutout. This fault cannot cause a lockout. The fault display message will be present only during the time when the ambient temperature is causing a fault condition. The following is a sample display:

```
UNIT YYYYYYYY
 LOW AMBIENT TEMP
```

The unit is also inhibited from starting any time the temperature is below the cutout plus 1.1°C (2°F).

Low leaving chilled liquid temp fault

The Low Leaving Chilled Liquid Temp Cutout helps to protect the chiller from an evaporator freeze-up should the chilled liquid temp drop below the freeze point. This situation could occur under low flow conditions or if the Micro Panel setpoint values are improperly programmed. Any time the leaving chilled liquid temperature (water or brine) drops below the programmable cutout point, the chiller will fault and shutdown with a controlled ramped shutdown. Restart can occur, if demand allows, when chilled liquid temperature rises 2.2°C (4°F) above the cutout. This fault cannot cause a lockout. The following is a sample shutdown message:

```
UNIT YYYYYYYY
LOW LEAVING CHILLED LIQUID TEMP
```

The unit is inhibited from starting any time the chilled liquid temperature is below the cutout plus 2.2°C (4°F).

VSD communications failure fault

The VSD Communications Failure is to prevent the unit from trying to run, if the Chiller Control Board never initializes communications with the VSD Logic Board. The unit will also shut down with a controlled ramped shutdown if the Chiller Control Board loses communications with the VSD Logic Board while the chiller is operating.

On power-up, the Chiller Microprocessor Board will attempt to initialize communications with the VSD Logic Board. The control panel will request data from the VSD, which includes the number of compressors and the VSD software version. Once these data points have been received by the Chiller Control Board, and have been successfully initialized, the Chiller Control Board will not request them again. If the comms connection fails to occur and a reply from the VSD Logic Board does take place in 8 seconds, the Chiller Control Board will prevent the chiller from operating and a fault message will be displayed.

During normal operation, if the control panel Chiller Control Board receives no valid response to messages for 8 seconds, the unit will shut down all compressors on a Comms fault. The Chiller Control Board will continue to send messages to the VSD while faulted. The unit will be inhibited from starting until communications is established. The fault will automatically reset when the Chiller Control Board receives a valid response from the VSD for a data request. The following is an example of a Comms Failure fault message:

```
UNIT YYYYYYYY
VSD COMMUNICATIONS FAILURE
```


© 2025 Johnson Controls. All rights reserved.

System safeties, faults

System safety (fault) operation

System safeties are faults that cause individual systems to be shut down if a safety threshold is exceeded for 3 seconds. System faults are auto reset faults in that the system will be allowed to restart automatically after the 120 second anti-recycle timer times out. The only exception is after any 3 faults on the same system occur within 90 minutes, that system will be locked out on the last fault. The lockout condition requires a manual reset using the system switch. The respective system switch must be cycled OFF and ON to clear the lockout fault.

When multiple systems are operating and a system fault occurs, the running systems will ramp down and the faulted system will be shut OFF and the previously operating will restart if required after the fault clears and/or the 120 second anti-recycle timer times out.

In the descriptions of the fault displays that follow, the fault message will show a YYYYYYYY to indicate that a system is in a FAULT condition and will restart when the fault clears, or LOCKOUT and will not restart until the operator clears the fault using the keypad. If a system safety is in effect, the message will be displayed to the operator when the STATUS key is pressed.

In some cases, a control panel fault will occur after a VSD fault, possibly during system shutdown or at some later time. This is known as an ALL FAULT and these faults will be recorded as such under the HISTORY information stored at the instant of the primary fault. In some cases, this information may be valuable in troubleshooting the primary fault. An example of the ALL FAULT history message as shown in the *All fault data on Page 159* under the HISTORY key. When an ALL FAULT occurs, associated history information will not be stored. If an additional fault does not occur, the ALL FAULTS display will indicate NONE.

In cases where a VSD fault occurs during the ramp-down of a control panel fault (that is, low suction pressure, low water temp, and so on), the VSD fault will be stored as a new fault with the associated fault information stored at the instant the VSD fault occurred (that is, IGBT Gate Drive, Single Phase Input, VSD CT Plug, and so on). The control panel fault that occurred before the VSD fault will be stored with the associated complete data related to the fault as a numerically lower numbered history in the history buffers.

High discharge pressure cutout (software) fault

The High Discharge Pressure Cutout is a software fault. A system will fault and shut down with a controlled ramped shutdown on high discharge pressure when the discharge pressure rises above 22.4 barg (325 psig) for 0.5 seconds. The system will be allowed to restart when the discharge pressure falls to 20.3 barg (295 psig). The system will also be inhibited from starting if the pressure is above 20.3 barg (295 psig). The following is the fault message for this safety:

SYS X YYYYYYYY HIGH DISCHARGE PRESSURE

The X indicates the system and YYYYYYYY indicates the system is in a FAULT condition and will restart when the 120 second anti-recycle timer times out, or LOCKOUT and does not restart until the operator clears the fault using the keypad.

High discharge pressure cutout (HPCO) (hardware) fault

The mechanical high pressure cutout protects the system from experiencing dangerously high discharge pressure. A system will fault and shut down immediately when the mechanical high pressure cutout contacts open. The fault occurs immediately and does not wait 3 seconds, which is common in most system faults.

The HPCO is wired in series with the VSD Run Signal and will only be checked by the Chiller Control Board when the system is running. The mechanical cutout opens at 23.2 barg ± 0.55 barg (337 psig ± 8 psig) and closes at 17.4 barg ± 0.69 barg (252 psig ± 10 psig). The following is the Status display fault message for this system:

SYS X YYYYYYYY HPCO FAULT

The X indicates the system and YYYYYYYY indicates the system is in a FAULT condition and will restart when the 120 second anti-recycle timer times out or LOCKOUT and will not restart until the operator clears the fault using the keypad.

© 2025 Johnson Controls. All rights reserved.

Low suction pressure cutout (software) fault

If the system attempts to run with a low refrigerant charge, the programmable LOW SUCTION PRESSURE CUTOUT protects the chiller from an evaporator freeze-up. The cutout is ignored at the system start to allow initial programmable SUCTION PRESSURE STARTUP BYPASS TIME.

Immediately after the Suction Pressure Startup By-pass Time has expired, the Suction Pressure Cutout is linearly ramped to allow the programmed Suction Pressure Startup ramp the Bypass Time, from 10% to 100% of the programmed Suction Pressure Cutout, as explained below.

If at any time during the ramp, the suction pressure falls below the ramped Suction Pressure Cutout, the system will shut down. If at any time after the ramp, the suction pressure falls below the programmable Suction Pressure Cutout, the system will shut down. This causes a lockout on the 3rd fault in 90 minutes.

Following is the system message, where X is the system number.

SYS X YYYYYYYY LOW SUCTION PRESSURE

Low suction pressure smart freeze fault

For R-134a and R-513A refrigeration sytem:

Suction Pressure Override Threshold =
Suction Pressure Cutout in psig + 1.7 psig

This safety fault is set when the Suction Pressure < programmable Suction Pressure Override Threshold, longer than the programmable Smart Freeze Timer.

This safety fault is released when the Suction Pressure >= Suction Pressure Override Threshold. This fault causes a lockout on the 3rd fault in 90 minutes. The following is the system message, where X is the system number.

SYS X YYYYYYYY LOW SUCT PRES SMART FREEZE

Low motor current cutout fault

The Motor Current Cutout shuts the system down with a controlled ramped shutdown when the microprocessor detects the absence of motor current (less than 10% FLA), usually indicating that a compressor is not running. This safety is ignored for the first 10 seconds of operation.

The following is the status display fault message for this safety:

SYS X YYYYYYYY LOW MOTOR CURRENT

The X indicates the system and YYYYYYY indicates the system is in a FAULT condition and will restart when the 120 second anti-recycle timer times out or LOCKOUT and will not restart until the operator clears the fault using the keypad.

High differential oil pressure cutout fault

The High Differential Oil Pressure Cutout protects the compressor from low oil flow and insufficient lubrication, possibly from a dirty oil filter. A system will fault and shut down with a controlled ramped shutdown when its Discharge to Oil Differential Pressure rises above the cutout of 4.48 barg (65 psid). This safety is ignored for the first 90 seconds of run time. This safety measures the pressure differential between discharge and oil pressure, which is the pressure drop across the oil filter. The following is the Status display fault message for this safety:

SYS X YYYYYYYY HIGH DIFF OIL PRESSURE

The X indicates the system and YYYYYYY indicates the system is in a FAULT condition and will restart when the 120 second anti-recycle timer times out or LOCKOUT and will not restart until the operator clears the fault using the keypad.

© 2025 Johnson Controls. All rights reserved.

Low differential oil pressure cutout fault

The Low Differential Oil Pressure Cutout protects the compressor from low oil flow and insufficient lubrication. A system will fault and shut down with a controlled ramped shutdown when it's differential between oil and suction pressure falls below the cutout. This safety ensures that the compressor is pumping sufficiently to push oil through the oil cooling circuit and through the internal compressor lubrication system. The following is the Status display fault message for this safety:

SYS X YYYYYYYY LOW DIFF OIL PRESSURE

The X indicates the system and YYYYYYY indicates the system is in a FAULT condition and will restart when the 120 second anti-recycle timer times out or LOCKOUT and will not restart until the operator clears the fault using the keypad.

The safety is ignored for the first 60 seconds of run time. After the first 60 seconds of operation, the cutout is linearly ramped from 0 barg to 2.09 barg (0 psid to 30 psid) in 5 to 10 minutes based on ambient temperature. See the following table for the ramp times for the given ambient temperatures.

Table 17 - Low differential oil pressure cutout

Ambient temperature	Ramp time
more than 10°C (50ºF)	5 min
more than 7.2°C (45ºF)	6 min
more than 4.4°C (40ºF)	7 min
more than 1.6°C (35ºF)	8 min
more than 1.1°C (30ºF)	9 min
more than or equal to 1.1°C (30ºF)	10 min

A 30 second safety bypass below 50 Hz is employed during rampdown. The bypass is primarily needed under conditions where another compressor is being brought on and the running compressor is being ramped down to 5 Hz to add the additional compressor due to load requirements. Under these conditions, the slow speed of the running compressors cause the oil differential to become very low, especially if the water temperature is high and the suction pressure is high. The bypass ensures the compressors will not trip on a nuisance low oil differential fault.

High discharge temperature cutout fault

The High Discharge Temperature Cutout protects the motor and compressor from overheating. A system will fault and shut down with a controlled ramped shutdown when its Discharge Temperature rises above 121°C (250°F). A system will also be inhibited from starting if the discharge temperature is above 93°C (200°F). The following is the Status display fault message for this safety:

SYS X YYYYYYYY HIGH DISCHARGE TEMP

The X indicates the system and YYYYYYY indicates the system is in a FAULT condition and will restart when the 120 second anti-recycle timer times out or LOCKOUT and will not restart until the operator clears the fault using the keypad.

Low discharge superheat cutout fault

The Low Discharge Superheat safety helps protect the compressor from liquid floodback through the economizer line due to a high flashtank level. It also helps protect the compressor from excessive oil in circulation due to excess oil charge in the system. Excessive oil in circulation brings back liquid refrigerant which is entrained in the oil. The liquid then drops out once it enters the compressor.

The safety is ignored for the first 10 minutes of operation if the system economizer feed valve is closed (0%) and for 5 minutes of operation if the economizer feed valve is open greater than 0%. If the discharge superheat falls below 2.8°C (5.0°F) for 5 minutes under either condition, the system will shut down.

The X indicates the system and YYYYYYY indicates the system is in a FAULT condition and will restart when the 120 second anti-recycle timer times out or LOCKOUT and will not restart until the operator clears the fault using the keypad.

© 2025 Johnson Controls. All rights reserved.

Discharge pressure load limiting/unloading

Discharge pressure load limiting protects the condenser from experiencing dangerously high pressures. A system is permitted to load normally as long as the discharge pressure is below the High Discharge Pressure Cutout minus 20 psig. Between Cutout minus 20 psig and Cutout minus 15 psig loading is inhibited even though increased loading may be required. Between Cutout minus 15 psig and the Discharge Pressure Cutout, forced unloading is performed every 2 seconds according to the following table.

The discharge pressure unload point is fixed at 255 psig.

Table 18 - Discharge pressure load limiting/unloading

Discharge pressure	Unloading
Discharge Pressure Cut-out- 20 psig and Discharge Pressure Cutout- 15 psig	0 Hz
Discharge Pressure Cutout- 13.5 psig	1 Hz
Discharge Pressure Cutout- 12 psig	2 Hz
Discharge Pressure Cutout- 10.5 psig	3 Hz
Discharge Pressure Cutout- 9 psig	4 Hz
Discharge Pressure Cutout- 7.5 psig	5 Hz
Discharge Pressure Cutout- 6 psig	6 Hz
Discharge Pressure Cutout- 4.5 psig	7 Hz
Discharge Pressure Cutout- 3 psig	8 Hz
Discharge Pressure Cutout- 1.5 psig	9 Hz
Discharge Pressure Cutout- 0 psig	10 Hz

Suction pressure load limiting/unloading

Suction pressure load limiting helps to protect the evaporator from freezing. A system is permitted to load normally as long as the Suction Pressure is above the **Suction Pressure Cutout + 2.6 psig**. Between **Suction Pressure Cutout + 2.6 psig** and the **Suction Pressure Cutout + 1.7 psig**, loading is inhibited, even though increased loading is required.

Between the **Suction Pressure Cutout + 1.7 psig** and **Suction Pressure Cutout**, forced unloading is performed every 2 seconds according to *Table 19 on page 144*. This situation would occur if the suction pressure cutout transient override control is in effect (See *Low suction pressure cutout (software) fault on Page 142*). The suction pressure cutout is programmed under the PROGRAM key. The default Suction Pressure Cutout is set at 26.1 psig.

Suction pressure load limiting is active at startup, to only prevent loading of the compressors. Suction pressure limit unloading will not occur until the system run time reaches 5 minutes of operation to allow the system to stabilize.

Table 19 - Suction pressure load limiting/unloading

R-134a	
Suction pressure	**Unloading**
Suction Pressure is between **Cutout +2.60 psig** and **Cutout +1.70 psig**	0 Hz
Suction Pressure Cutout+1.53 psig	1 Hz
Suction Pressure Cutout+1.36 psig	2 Hz
Suction Pressure Cutout+1.19 psig	3 Hz
Suction Pressure Cutout+1.02 psig	4 Hz
Suction Pressure Cutout+0.85 psig	5 Hz
Suction Pressure Cutout+0.68 psig	6 Hz
Suction Pressure Cutout+0.51 psig	7 Hz
Suction Pressure Cutout+0.34 psig	8 Hz
Suction Pressure Cutout+0.17 psig	9 Hz
Suction Pressure Cutout	10 Hz
R-513A	
Suction pressure	**Unloading**
Suction Pressure is between "Cutout +2.70 psig" and "Cutout +1.80 psig"	0 Hz
Suction Pressure Cutout+1.62 psig	1 Hz
Suction Pressure Cutout+1.44 psig	2 Hz
Suction Pressure Cutout+1.26 psig	3 Hz
Suction Pressure Cutout+1.08 psig	4 Hz
Suction Pressure Cutout+0.90 psig	5 Hz
Suction Pressure Cutout+0.72 psig	6 Hz
Suction Pressure Cutout+0.54 psig	7 Hz
Suction Pressure Cutout+0.36 psig	8 Hz
Suction Pressure Cutout+0.18 psig	9 Hz
Suction Pressure Cutout	10 Hz

© 2025 Johnson Controls. All rights reserved.

Sensor failure cutout fault

The Sensor Failure Cutout prevents the system from running when a critical sensor (transducer, level sensor, or motor winding temp sensor) is not functioning properly and reading out of range. This safety is checked at startup and will prevent the system from running if one of the sensors has failed.

The sensor failure safety will also fault and shutdown a system while in operation, if a safety threshold is exceeded or a sensor reads out of range (high or low). Following is the Status display fault message.

SYS X YYYYYYYY SENSOR FAILURE: ZZZZZZZZZZZZ

NOTE

The X indicates the specific system. YYYYYYYY will either indicate the system is in a* FAULT *condition and will restart when the fault clears, or* LOCKOUT *after 3 faults and will not restart until the operator clears the fault using the keypad.

ZZZZZZZZZZZ indicates the failed sensor as follows:

- SUCT PRESS
- OIL PRESS
- DSCH PRESS
- MOTOR TEMP X *

The Unit Setup Mode allows a specific motor temperature sensor to be ignored, if it fails. The start inhibit thresholds for each sensor are shown in the following table.

Table 20 - Start inhibit sensor thresholds

Sensor	Low threshold	High threshold
Suction Transducer	0.3 VDC	4.7 VDC
Oil Transducer	0.3 VDC	4.7 VDC
Discharge Transducer	0.3 VDC	4.7 VDC
Motor Temp. Sensor	0°C (0ºF)	116°C (240ºF)

High motor temperature cutout fault

The High Motor Temperature Cutout prevents a compressor from running when its motor temperature is too high. A system will fault and shut down when any compressor motor temperature sensor rises above 121°C (250°F). The system will be inhibited from starting if its motor temperatures sensors indicate temperatures above 116°C (240°F). If any single temperature sensor is being ignored under the Unit Set-up Mode, that sensor will not be utilized when evaluating motor temperature. The following is a sample Status display fault message:

SYS X YYYYYYYY HIGH MOTOR TEMP

The X indicates the system and YYYYYYY indicates the system is in a FAULT condition and will restart when the fault clears or LOCKOUT and will not restart until the operator clears the fault using the keypad.

System control voltage cutout fault

The System Control Voltage Cutout alerts the operator the 115 VAC Control voltage to one of the systems is missing. This could be due to a system fuse that has been removed or is blown. The affected system will fault and shut down immediately when the 115 VAC supply is lost.

The safety will not shut down a system if the UNIT switch is OFF, which electrically removes the 115 VAC to all systems. The safety is only used to indicate a situation where a single system is missing the 115 VAC.The safety will not cause a lockout and the system fault will reset when power is returned. The following is a sample message:

SYS X YYYYYYYY CONTROL VOLTAGE

The X indicates the system and YYYYYYY indicates the system is in a FAULT condition and will restart when the fault clears or LOCKOUT and will not restart until the operator clears the fault using the keypad.

© 2025 Johnson Controls. All rights reserved.

Eductor clog fault

To sense a loss of oil return to the compressor, an eductor clog detection safety is utilized. The safety monitors the temperature of the line between the eductor and the suction line.

The control algorithm looks at the eductor line temperature once a second. At start, a clog timer is set at 600 seconds. If the eductor line temperature is less than the saturated suction temperature plus 5.5°C (10°F) each time the control circuit looks at the temperature, the clog timer is reset to 600 seconds.

If the eductor line temperatures is greater than the saturated suction temperature plus 5.5°C (10°F), the clog timer is decremented one second. If the temperature remains above the saturated suction temperature plus 5.5°C (10°F) for 600 seconds, the clog timer will count to 0 and the system will shut down and lock out. The status fault will indicate an eductor clog fault.

EDUCTOR CLOG FAULT

Whenever this fault occurs, the eductor filter should be changed. The clog timer resets to 600 seconds whenever the control algorithm sees the eductor line temperature is less than the saturated suction pressure plus 5.5°C (10°F). This prevents nuisance eductor clog faults.

© 2025 Johnson Controls. All rights reserved.

Section 8: Micropanel

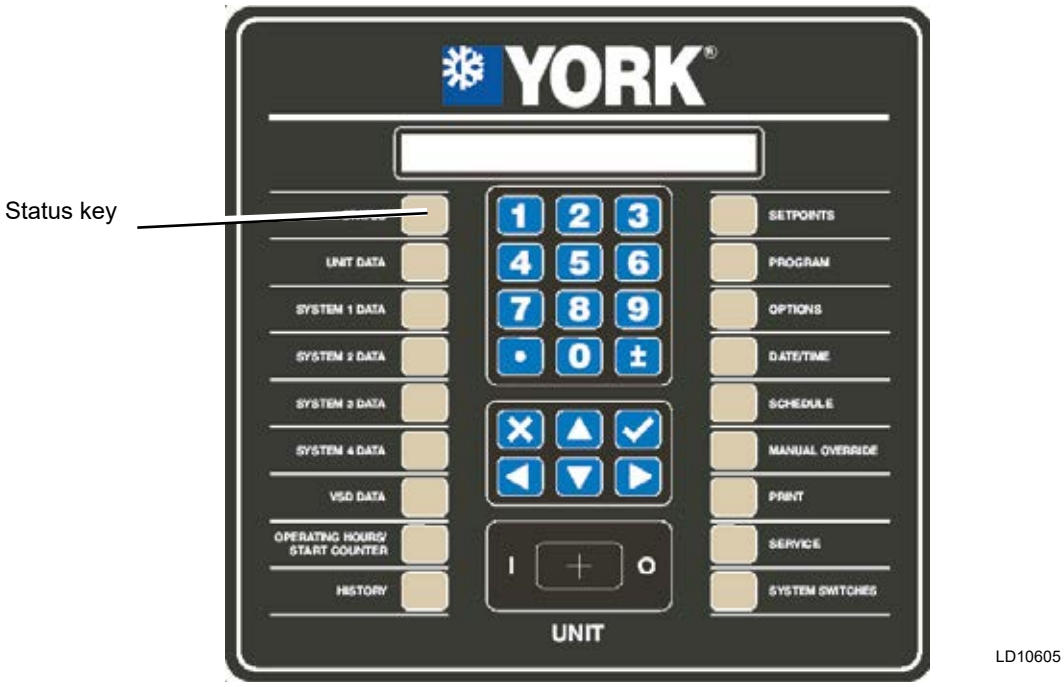

Status key operation

The STATUS key displays the current chiller or system operational status. The messages displayed include running status, cooling demand, system faults, unit faults, VSD faults, unit warnings, external device status, load limiting, anti-recycle timer, status of unit/system switches, and a number of other messages. Pressing the STATUS key will enable the operator to view the current status of the chiller. The display will show one message relating to the “highest priority” information as determined by the microprocessor. There are three types of status data, which may appear on the display:

- General status messages
- Unit safeties
- System safeties

When power is first applied to the control panel, the following message displaying Johnson Controls International Corporation, the EPROM version, date, and time will be displayed for 2 seconds, followed by the appropriate general status message:

```
(C)2004 JOHNSON CONTROLS INTERNATIONAL
C.XXX.XX.XX 18-SEPT-2010 12:45: AM
```

Unit status messages occupy 2 lines of the Status message display. If no unit status message applies, individual status messages for each system will be displayed.

Any time the STATUS key is pressed or after the EPROM message disappears at power-up, a status display indicating chiller or system status will appear.

Multiple STATUS messages may appear and can be viewed by pressing the STATUS key repeatedly to allow scrolling through as many as three STATUS messages, which could possibly be displayed at any time on a 2 compressor chiller.

Examples of the status messages are shown in the next topic.

General status messages

```
UNIT STATUS
 MANUAL OVERRIDE
```

This message indicates the chiller is operating in MANUAL OVERRIDE mode. This message is a priority message and cannot be overridden by any other STATUS message. When in Manual Override, no other status message will ever be present.

© 2025 Johnson Controls. All rights reserved.

```
UNIT STATUS
 UNIT SWITCH OFF SHUTDOWN
```

This message indicates the UNIT SWITCH is in the OFF position and not allowing the unit to run.

```
UNIT STATUS
 DAILY SCHEDULE SHUTDOWN
```

This message indicates that either the daily or holiday schedule programmed is keeping the chiller from running.

```
UNIT STATUS
 REMOTE CONTROLLED SHUTDOWN
```

This message indicates that either an ISN or RCC has turned the chiller OFF and is not allowing it to run.

```
UNIT STATUS
 FLOW SWITCH SHUTDOWN
```

This message indicates the flow switch is not allowing the chiller to run. There is a 1 second delay on this safety to ensure the flow switch did not momentarily open.

```
UNIT STATUS
 VSD COOLING SHUTDOWN
```

This message indicates the chiller is shutdown, but running all the condenser fans, VSD glycol pump, and VSD fan in an effort to bring the internal VSD ambient temperature down to an acceptable level before allowing the chiller to start.

```
SYS X REMOTE RUN CONTACT IS OPEN
```

This message indicates the remote start / stop contact between 2 and 15 or 2 and 16 of the 1TB terminal block is open. There is a 1 second delay on this safety to ensure the remote contacts did not momentarily open.

```
SYS X SYSTEM SWITCH IS OFF
```

This message indicates the system switch (software using keypad) is turned OFF. The system will not be allowed to run until the system switch is turned ON using the keypad.

```
SYS X NOT RUNNING
```

This message indicates the system is not running because the chilled liquid is below the setpoint or the micro has not loaded the lead system far enough into the loading sequence to bring the lag system ON. This message will be displayed on the lag system until the loading sequence is ready for the lag system to start.

```
SYS X COOLING DEMAND SHUTDOWN
```

This message is only displayed in the Normal Shutdown History display to indicate a capacity control shutdown.

```
SYS X COMPRESSOR RUNNING
```

This message indicates the system is running as a result of cooling demand.

```
SYS X SHUTTING DOWN
```

The compressor shutting down message indicates the respective system is ramping down in speed before shutting OFF. This message is displayed after the software run signal is disabled until the VSD notifies the Chiller Control Board the compressor is no longer running.

```
SYS X ANTI-RECYCLE TIMER  = XXX SEC
```

This message indicates the amount of time left on the respective system anti-recycle timer and the system is unable to start until the timer times out.

```
SYS X DISCHARGE PRESSURE LIMITING
```

The Discharge Pressure Limiting message indicates the discharge pressure load limit or discharge pressure unloading is in effect.

```
SYS X SUCTION PRESSURE LIMITING
```

The Suction Pressure Limiting message indicates the suction pressure load limit or suction pressure unloading is in effect.

```
SYS X MOTOR TEMP LIMITING
```

The Motor Temp Limiting message indicates the motor temp load limit or motor temp unloading is in effect.

```
SYS X MOTOR CURRENT LIMITING
```

The motor current limiting message indicates the motor current load limit or motor current unloading is in effect.

© 2025 Johnson Controls. All rights reserved.

SYS X PULLDOWN MOTOR CURRENT LIMITING

The pulldown motor current limiting message indicates the pulldown motor current load limit or pulldown motor current unloading is in effect based on the programmed setpoint.

SYS X ISN CURRENT LIMITING

The ISN Current Limiting message indicates the motor current load limit or motor current unloading is in effect through the use of the YORKTalk setpoint.

SYS X REMOTE MOTOR CURRENT LIMITING

The Remote Motor Current Limiting message indicates the motor current load limit or motor current unloading is in effect through the use of the remote setpoint offset. The setpoint may be offset using a remote voltage or a current signal. The remote current limit must be activated for this function to operate.

SYS X VSD BASEPLATE TEMP LIMITING

The VSD Baseplate Temp Limiting message indicates the VSD Baseplate temp is high and load limit or unloading is in effect.

SYS X VSD INTERNAL AMBIENT TEMP LIMITING

The VSD Internal Ambient Temp Limiting message indicates the VSD internal ambient temp is high and load limit or unloading is in effect.

SYS X SOUND LIMITING

The sound limiting message indicates the sound load limit is in effect based on the locally programmed sound limit from the keypad. The sound limit must be activated for this function to operate.

SYS X ISN SOUND LIMITING

The ISN sound limiting message indicates the sound load limit is in effect based on the ISN transmitted sound limit setpoint. The sound limit must be activated for this function to operate.

SYS X REMOTE SOUND LIMITING

The Remote sound limiting message indicates the sound load limit is in effect based on the Remote controlled sound limit setpoint. The setpoint may be offset using a remote voltage or current signal. The sound limit option must be activated for this function to operate.

© 2025 Johnson Controls. All rights reserved.

Unit data key

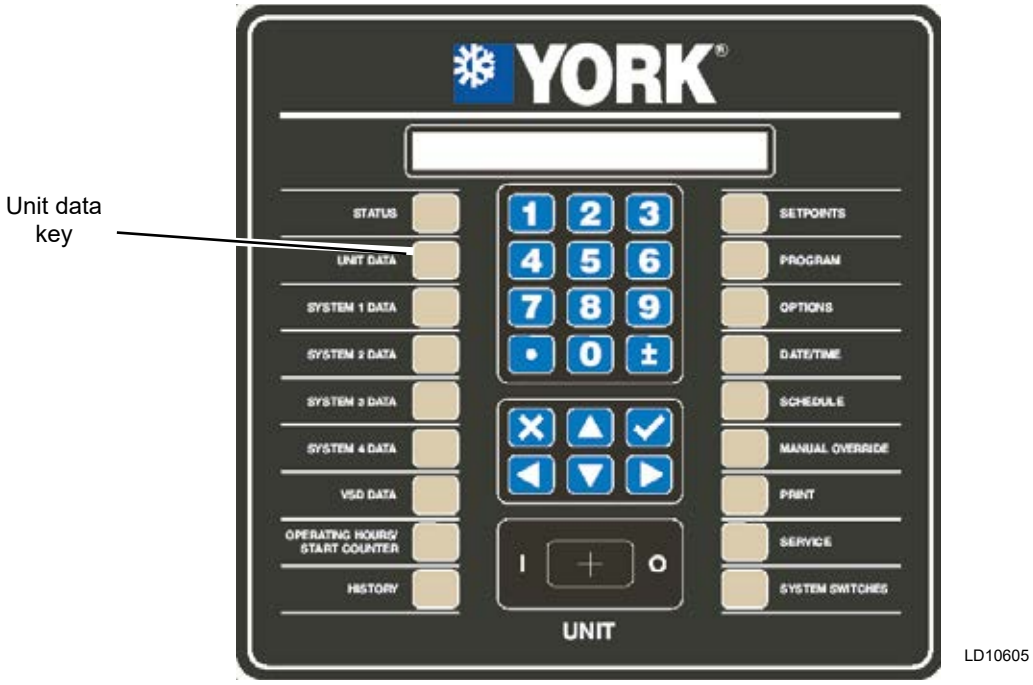

General

The UNIT DATA key provides the user with displays of unit temperatures, and unit related data. Displays can be selected by repeatedly pressing the UNIT DATA key or the▲ or ▼ Arrow Keys.

Unit data key operation

The first key press displays Evaporator Leaving and Return Chilled Liquid Temperatures.

```
UNIT CHILLED LIQUID LEAVING = XXX.X °F
                    ENTERING = XXX.X °F
```

The next key press of the UNIT DATA key or the ▼ (ARROW) key displays the ambient air temperature.

```
UNIT
  OUTSIDE AMBIENT AIR TEMP = XXX.X °F
```

The next key press will display the time remaining on the load and unload timers.

```
UNIT          LOAD TIMER = XXX SEC
            UNLOAD TIMER = XXX SEC
```

The next key press displays the error in temperature between the actual leaving chilled liquid temperature and the setpoint temperature. The display also shows the rate of change of the chilled liquid temperature.

```
UNIT        TEMP ERROR = XXX.X °F
                 RATE = XXX.X °F/M
```

The next key press displays the system designated as the lead system and the Flow Switch status (ON or OFF).

```
UNIT   LEAD SYSTEM NUMBER = X
                FLOW SWITCH = XXX
```

The next key press displays the status of the evaporator pump and heater, where XXX is either ON or OFF.

```
UNIT          EVAP PUMP RUN = XXX
                 EVAP HEATER = XXX
```

The next key press displays the status of Active Remote Control.

```
UNIT ACTIVE REMOTE CONTROL = XXXXXX
 TYPE: RCC ISN CURR TEMP SOUND
```

XXXXX is either ACTIVE or NONE.

If no remote keys are active, the items on the second line are all blanked out. Any remote items that are active will be displayed, while the inactive items will be blanked out.

© 2025 Johnson Controls. All rights reserved.

The types of remote control are listed as follows:

- NONE - No remote control is actively controlling the chiller; however, remote monitoring by a remote device may still be active.
- RCC - A Remote Control Center is providing remote control. The chiller is in remote mode.
- ISN - YorkTalk using ISN. The chiller in remote mode.
- CURR - Remote Current Limiting is enabled.
- TEMP - Remote Temperature Reset is enabled.
- SOUND - Remote Sound Limiting is enabled.

The next key press displays the sound limit values as set under the PROGRAM key by the Local, ISN, and the Remote Sound Limit Inputs. Any sound limits that are inactive will display XXX instead of a numeric value.

UNIT SOUND LIMIT	LOCAL = XXX %
ISN = XXX	REMOTE = XXX %

© 2025 Johnson Controls. All rights reserved.

System data keys 1 through 4

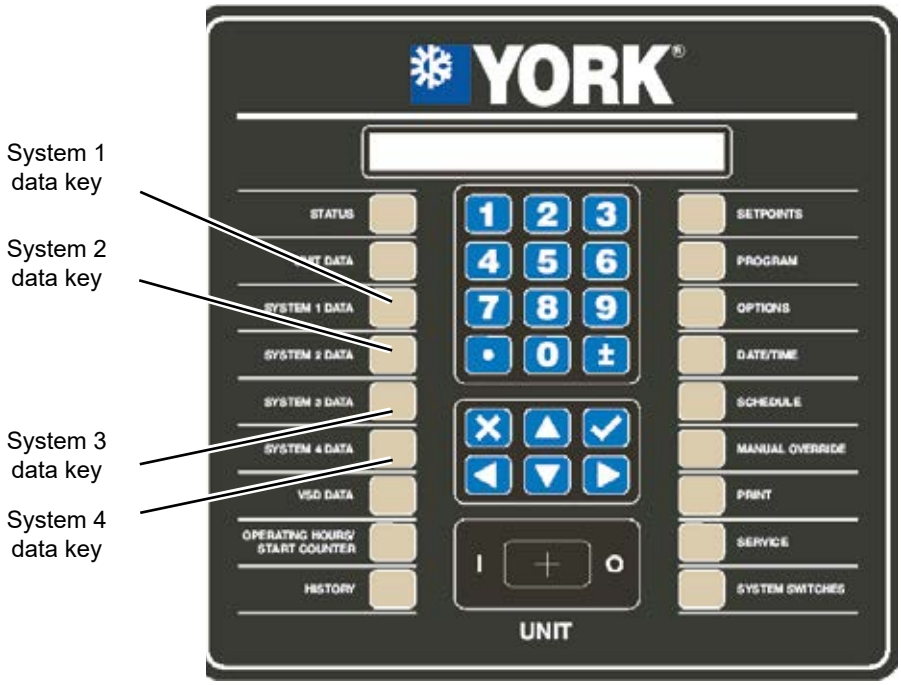

LD10605

General

The data keys provide the user with many displays of individual system temperatures, pressures, and other operating data. These keys have multiple displays, which can be seen by repeatedly pressing the SYSTEM DATA or the ▲ or ▼ (Arrow) keys. An explanation of each key and its messages is provided.

System 1 data key operation

The SYSTEM 1 DATA key provides the user with access to System 1 operating parameters. The following is a list of the data in the order in which it appears.

The first key press of the SYSTEM X DATA key displays all of the measured system pressures (oil and discharge).

```
SYS 1 PRESSURES          OIL = XXXX PSIG
                 DISCHARGE = XXXX PSIG
```

The second key press of the SYSTEM DATA key or the ▼ (DOWN ARROW) key displays system suction and condenser liquid pressure.

```
SYS 1 PRESSURES       SUCTION = XXXX PSIG
           CONDENSER LIQUID = XXXX PSIG
```

The next key press displays system oil and eductor temperatures.

```
SYS 1 TEMPERATURES          OIL = XXX.X °F
                      EDUCTOR = XXX.X °F
```

The next key press displays system condenser liquid temperature, liquid line subcooling and saturated discharge temperature on the liquid line.

```
SYS 1 CONDENSER LIQUID TEMP  = XXX.X °F
SUBCOOLING = XXX.X  SAT TEMP = XXX.X °F
```

The next key press displays discharge temperature, discharge superheat and saturated discharge pressure at the compressor.

```
SYS 1 DISCHARGE          TEMP = XXX.X °F
SUPERHEAT = XXX.X     SAT TEMP = XXX.X °F
```

The next key press displays the System 1 motor thermistor temperatures.

```
SYS 1 MOTOR TEMPS     T1 = XXX.X °F
     T2 = XXX.X °F    T3 = XXX.X °F
```


© 2025 Johnson Controls. All rights reserved.

NOTE

If any motor temp sensor is being ignored, (selectable under Unit Set-up Mode), that sensor's value will be displayed as XXXXX.

The next key press displays the compressor speed in % (0 to 100%) and the compressor heater status (ON or OFF).

```
SYS 1  COMPRESSOR          SPEED = XXX.X %
                           HEATER = XXX
```

The next key press indicates the flash tank level low/high and the economizer valve % open.

```
SYS 1          FLASH TANK LEVEL = XXX.X %
               ECONOMIZER VALVE = XXX.X %
```

The next key press displays the condenser liquid line subcooling and the drain valve position.

```
SYS 1     CONDENSER SUBCOOLING = XXX.X °F
          CONDENSER DRAIN VALVE = XXX.X %
```

The next key press indicates the number of condenser fans steps that are enabled (1 to 4), if the fans are not operating on a VSD.

```
SYS 1                CONDENSER FANS ON = X
```

If the fans are controlled by an optional VSD, the display will indicate fan speed signal control voltage to the VSD and the fan speed (0 to 100%).

```
SYS 1                CONDENSER FANS ON = X
          VSD FAN SPEED = XX.X V = XXX %
```

The next key press will indicate the state of the optional VI solenoids where XXX indicates ON or OFF.

```
SYS 1                VI STEP SOLENOID 1 = XXX
                     VI STEP SOLENOID 2 = XXX
```

The next key press displays the system run time in days, hours, minutes, and seconds.

```
SYS 1 RUN TIME
XX DAYS  XX HOURS  XX MINUTES  XX SECONDS
```

The next key press indicates the status of the RUN Relay where XXX is ON or OFF, the status of the RUN Permissive signal (flow switch/remote start/stop circuit 2 and 15 of 1TB, SYS 1) or 2 and 16 of 1TB, SYS 2) and whether the internal software is telling the system to run (ON or OFF).

```
SYS 1 RUN SIGNALS          RELAY = XXX
RUN PERM = XXX           SOFTWARE = XXX
```

8

System 2 data key operation

System 2 keys function the same as the SYSTEM 1 DATA key except that it displays data for System 2.

On a 2 compressor system, the SYSTEM 3 and SYSTEM 4 data keys will display the following messages:

```
SYS 3 DATA NOT AVAILABLE
```

```
SYS 4 DATA NOT AVAILABLE
```

© 2025 Johnson Controls. All rights reserved.

Sensor displays

Table 21 on page 154 lists all the sensors attached to the control board associated with system data keys. The minimum and maximum values displayed on the micro display are provided.

If values exceed the limits in the table, a < (less than) or > (more than) sign will be display along with the minimum or maximum value.

Table 21 - Sensor min/max outputs

System sensor			
Sensor/input	**Type**	**Minimum value**	**Maximum value**
Suction Pressure	Transducer	0.0 psig (0 barg)	125.0 psig (8.62 barg)
Condenser Liquid Pressure	Transducer	0.0 psig (0 barg)	400.0 psig (27.6 barg)
Discharge Pressure	Transducer	0.0 psig (0 barg)	400.0 psig (27.6 barg)
Oil Pressure	Transducer	0.0 psig (0 barg)	400.0 psig (27.6 barg)
Flash Tank Level	Switch	Low	High
Condenser Liquid Temp	Thermistor	-4.1°F (-20.06°C)	155.6°F (68.67°C)
Leaving Chilled Liquid Temp	Thermistor	-19.1°F (-28.49°C)	110.2°F (43.44°C)
Return Chilled Liquid Temp	Thermistor	-19.1°F (-28.49°C)	110.2°F (43.44°C)
Eductor Temp	Thermistor	-4.1°F (-20.06°C)	132.8°F (56.00°C)
Ambient Air Temp	Thermistor	-14.6°F (-25.89°C)	137.9°F (58.83°C)
Compressor Motor Temp	Thermistor	-30.2°F (-34.56°C)	302.0°F (150.00°C)
Discharge Temp	Thermistor	40.3°F (4.61°C)	302.6°F (150.33°C)
Remote Temp Reset	4 mA to 20 mA, 0 VDC to 10 VDC, 0 mA to 20 mA or 2 VDC to 10 VDC	0%	100%
Remote Current Limit	4 mA to 20 mA, 0 VDC to 10 VDC, 0 mA to 20 mA or 2 VDC to 10 VDC	0%	100%
Remote Sound Limit	4 mA to 20 mA, 0 VDC to 10 VDC, 0 mA to 20 mA or 2 VDC to 10 VDC	0%	100%

© 2025 Johnson Controls. All rights reserved.

VSD data key

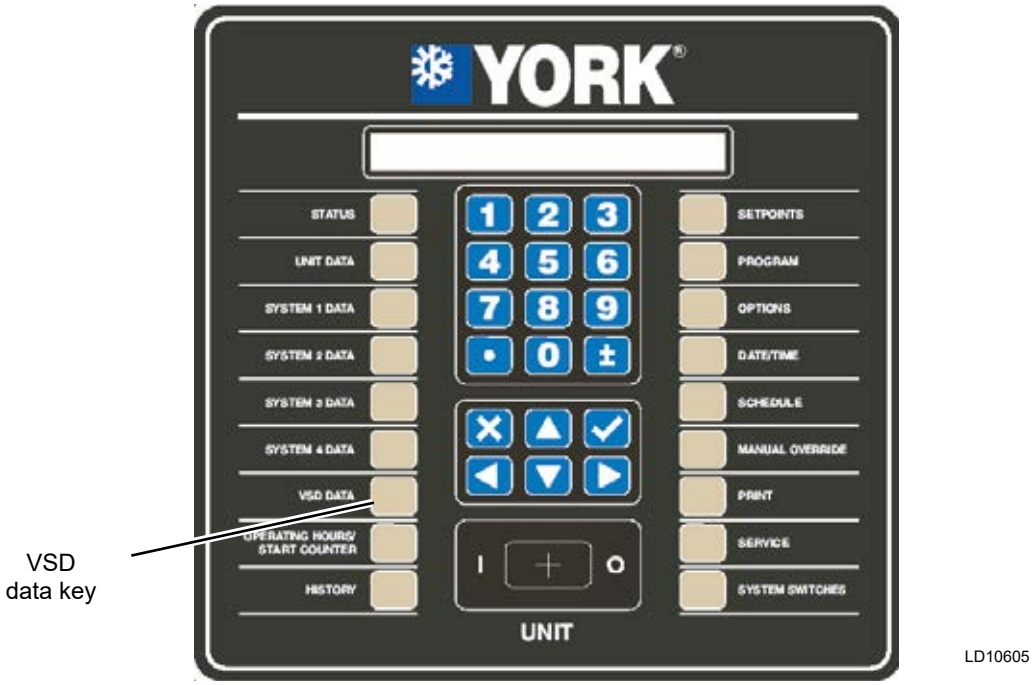

LD10605

General

The VSD DATA key provides the user with displays of VSD temperatures, voltages, currents, and other operating data. This key has multiple displays, which can be seen by repeatedly pressing the VSD DATA or the ▲ or ▼ (Arrow) keys. An explanation of each message is provided.

VSD data key operation

The first VSD DATA key press displays the actual VSD Output Frequency and Command Frequency.

```
VSD  FREQUENCY      ACTUAL = XXX.X HZ
                    COMMAND = XXX.X HZ
```

The second key press of the VSD DATA key or the ▼ (ARROW) key displays the calculated compressor % FLA and measured motor currents in amps for systems 1 and 2. When measuring motor current keep in mind that measuring inverter PWM current is difficult and meter error can be significant.

```
VSD  COMP  1 = XXX  AMPS      = XXX %FLA
     COMP  2 = XXX  AMPS      = XXX %FLA
```

The next key press displays the current limit values set locally on the panel under the PROGRAM key, remotely by an ISN, and remotely by the Current Limit input. Any current limits that are inactive will display "XXX" instead of a numeric value.

```
VSD  CURRENT  LIMIT    LOCAL = XXX %FLA
  ISN = XXX            REMOTE = XXX %FLA
```

The next key press displays DC Bus voltage.

```
VSD       DC  BUS  VOLTAGE = XXX  VDC
```

The next key press displays the Control Panel/VSD Internal Ambient Temperature and VSD Cooling Pump/ Fan Status. YYY will indicate ON or OFF.

```
VSD     INTERNAL  AMBIENT  TEMP = XXX.X °F
         COOLING SYSTEM STATUS = YYY
```

The next key press displays the IGBT highest baseplate temperature.

```
VSD  IGBT  BASEPLATE  TEMPS          T1 = XXX °F
                                     T2 = XXX °F
```

The next key press displays the state of the Precharge signal, where XXX is either ON or OFF.

```
VSD     PRECHARGE  SIGNAL = XXX
```

The next key press displays the setting of the VSD's 105% FLA overload potentiometer for Compressor #1 and 2. The settings are determined by the adjustment of the overload potentiometers on the VSD Logic Board. These pots are factory set and should not require changing unless the circuit board is replaced.

```
VSD     COMP  1  MOTOR  OVERLOAD = XXX AMPS
        COMP  2  MOTOR  OVERLOAD = XXX AMPS
```

© 2025 Johnson Controls. All rights reserved.

Table 22 - Compressor motor overload settings

Model		380 V - 60 Hz		400 V - 50 Hz		460 V- 60 Hz (see note 1)	
		Sys # 1	Sys # 2	Sys # 1	Sys # 2	Sys # 1	Sys # 2
50/60 Hz tons	50/60 Hz kW	OL setting	OL setting	OL setting	OL setting	OL setting	OL setting
YVAA0153	YVAA0543	225	225	225	225	175	175
YVAA0165	YVAA0565	225	225	225	225	175	175
YVAA0178	YVAA0588	225	225	225	225	175	175
YVAA0183	YVAA0643	283	236	283	231	225	175
YVAA0195	YVAA0665	283	236	283	231	225	175
YVAA0198	YVAA0688	283	236	283	231	225	175
YVAA0200	YVAA0700	300	300	283	283	236	236
YVAA0213	YVAA0743	283	283	283	283	225	225
YVAA0215	YVAA0765	283	283	283	283	225	225
YVAA0218	YVAA0788	283	283	283	283	225	225
YVAA0233	YVAA0843	338	300	338	283	283	236
YVAA0245	YVAA0865	338	300	338	283	283	236
YVAA0248	YVAA0888	338	300	338	283	283	236
YVAA0263	YVAA0943	338	338	338	338	283	283
YVAA0273	YVAA0963	338	338	338	338	283	283
YVAA0275	YVAA0965	338	338	338	338	283	283
YVAA0278	YVAA0988	334	334	317	317	276	276
YVAA0295	YVAA1015	412	334	412	317	362	276
YVAA0303	YVAA1093	412	334	412	317	362	276
YVAA0305	YVAA1065	412	334	412	317	362	276
YVAA0308	YVAA1088	412	334	412	317	362	276
YVAA0318	YVAA1188	412	334	412	317	362	276
YVAA0323	YVAA1143	412	412	412	412	362	362
YVAA0333	YVAA1173	412	412	412	412	362	362
YVAA0343	YVAA1193	412	412	412	412	362	362
YVAA0345	YVAA1215	412	412	412	412	362	362
YVAA0368	yvaa1288	720	338	720	338	590 480²	283
YVAA0373	yvaa1343	720	338	720	338	590 480²	283
yvaa0375	yvaa1315	720	338	720	338	590 480²	283
yvaa0398	yvaa1388	720	412	720	412	590 480²	392
yvaa0413	yvaa1443	720	412	720	412	590 480²	392
yvaa0425	yvaa1515	720	412	720	412	590 480²	392
yvaa0428	yvaa1488	720	412	720	412	590 480²	392
yvaa0443	yvaa1543	720	720	720	720	590 480²	590 480²
yvaa0475	yvaa1665	720	720	720	720	590 480²	590 480²
yvaa0483	yvaa1693	720	720	720	720	590 480²	590 480²
YVAA0500	YVAA1700	720	720	720	720	590 480²	590 480²
YVAA0523	YVAA1843	720	720	720	720	590 480²	590 480²

© 2025 Johnson Controls. All rights reserved.

Notes:

1. For 200 V, 230 V, and 575 V chillers, use the 460 V selection.

2. Applies to VSD Frame D Plus models, PIN 16 = L. Refer to Chiller Nameplate.

Operating hours/Start counter key

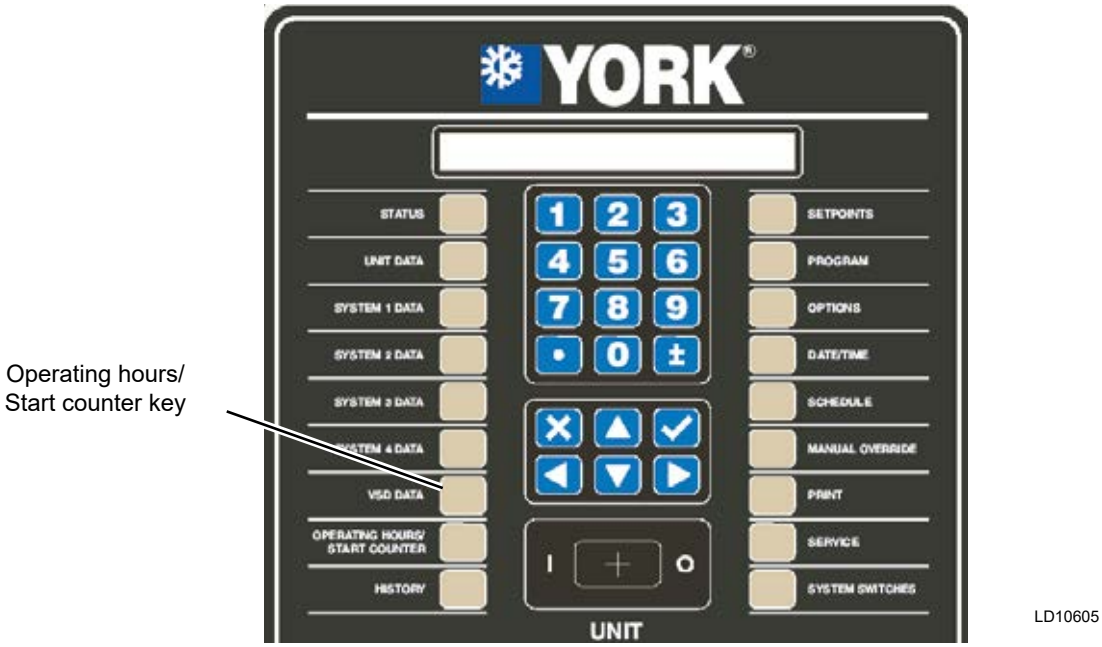

Compressor operating hours and compressor starts are displayed with a single key press. The maximum value for both hours and starts is 99,999, at which point they will roll over to 0.

A single display is available under this key and is displayed as follows.

```
HOURS 1=XXXXX,  2=XXXXX
START 1=XXXXX,  2=XXXXX
```


© 2025 Johnson Controls. All rights reserved.

History key

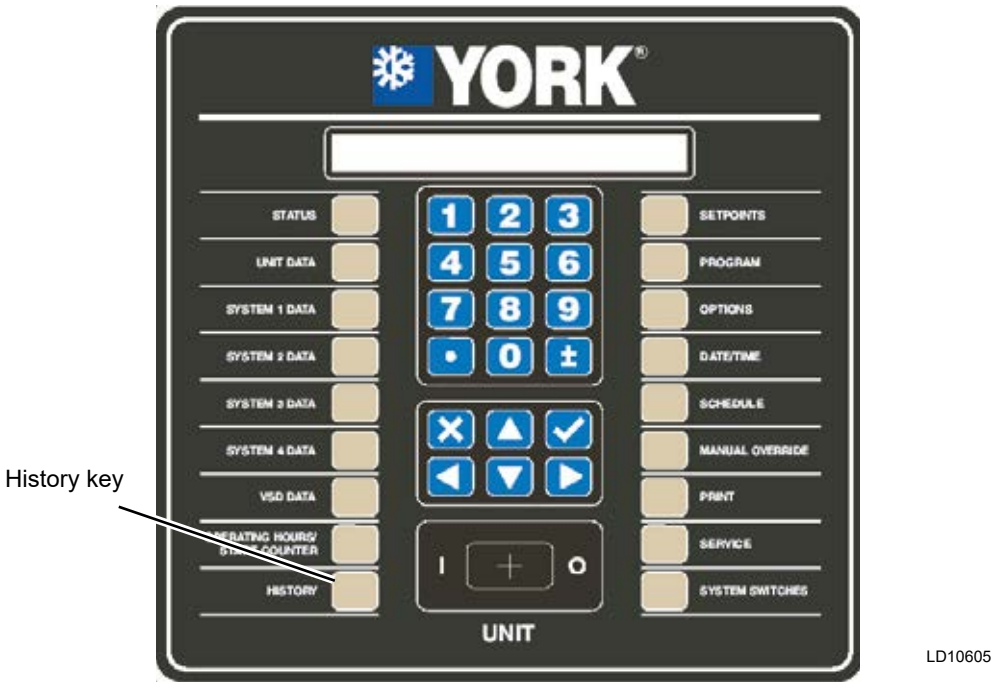

History key operation

The HISTORY key provides the user access to many unit and system operating parameters captured at the instant a unit or system safety (fault) shutdown occurs. The history buffer will also capture system data at the time of normal shutdowns such as cycling shutdowns. When the HISTORY key is pressed the following screen is displayed:

```
HISTORY          CHOOSE HISTORY TYPE
◄ ►     XXXXXXXXXXXXXXXXXXXXXXXXXXXX
```

The ◄ and ► (ARROW) keys allow choosing between NORMAL SHUTDOWNS and FAULT SHUTDOWNS. Fault shutdowns provide information on safety shutdowns, while “Normal” shutdowns provide chiller cycling information on temperature (demand), cycling, remote, system switch, and so on, shutdowns that are non-safety related shutdowns. Once the selection is made, the ✓ (ENTER) key must be pressed to enter the selection.

Normal shutdowns history

If the NORMAL SHUTDOWNS history is selected, the following screen will be displayed:

```
NORM HIST XX  18-JUN-2004 10:34:58 AM
YYYYYYYYYYYYYYYYYYYYYYYYYYYYYYYYYYYY
```

XX is the normal shutdown number. The display provides date and time of the shutdown and the reason for the cycling shutdown (YYY….).

The operator can view any of the stored 20 single display normal shutdown history buffers. History buffer number 1 provides the most recent shutdown information and buffer number 20 is the oldest safety shutdown information saved. The ◄ and ► (ARROW) keys allow scrolling between each of the history buffers. The ► (ARROW) key scrolls to the next normal history shutdown and the ◄ (ARROW) key scrolls to the previous normal history shutdown.

The following display is displayed on a normal shutdown due to shutdown on lack of cooling demand.

```
NORM HIST XX  18-JUN-2004 10:34:58 AM
SYS X COOLING DEMAND SHUTDOWN
```

Fault shutdowns history

If the FAULT SHUTDOWNS history is selected, the following screen will be displayed:

```
FAULT HIST XX  18-JUN-2004 10:34:58 AM
YYYYYYYYYYYYYYYYYYYYYYYYYYYYYYYYYYYY
```


© 2025 Johnson Controls. All rights reserved.

XX is the FAULT HISTORY shutdown number. The display will provide the date, time, and a description of the specific type of fault that occurred (YYY….).

The operator can view any of the stored 10 fault history buffers. History buffer number 1 provides the most recent safety shutdown information and buffer number 10 is the oldest safety shutdown information saved. The ◄ and ► arrow keys allow scrolling between each of the FAULT HIST buffers 1 through 10. The ▲ (UP) and ▼ (DOWN) arrow keys can be used to scroll forwards and backwards through the data in a specific history buffer, once it is displayed.

There is a large amount of data provided under each history. Rather than scroll sequentially through the data in a history, which is possible using the ▼ arrow key, the use of a combination of the ◄, ►, ▲, and ▼ arrow keys allows fast scrolling to specific data the user desires to view. To use this feature, the user needs to be aware the ◄ and ► arrow keys allow scrolling to the top of the data subgroups. Once a specific history is selected, the history data is divided under the subgroups of Unit Data, VSD Data, System Data, Hours / Starts, Setpoints, Options, and Program data. The ◄ and ► arrow keys allow moving to the first display under the next or previous subgroup at any time. Once the first display of a subgroup is displayed, the ▲, and ▼ arrow keys allow scrolling though the data in the subgroup. The ▼ arrow key allows scrolling though the data from first to last. When the last piece of data is displayed, the next press of the ▼ arrow key scrolls to the first piece of data in the next subgroup. The ▲ arrow key allows going to the previous display.

Listed below is a description of the fault data displays and their meaning. Data will be displayed in a specific order starting with the Status Display (System Faults only), Fault Display, All Fault Display, Unit Data, VSD Data, System Data, Operating Hours/Starts, Setpoints, Options, and Program Values at the time of the fault.

Status fault type

```
SYS X COMPRESSOR RUNNING
SYS X YYYYYYYY HIGH DIFF OIL PRESSURE
```

This message indicates the type of system fault. This screen is skipped if a UNIT Fault caused the shutdown.

Unit fault type

```
UNIT FAULT
 LOW AMBIENT TEMP
```

This message indicates the type of unit fault. This screen is skipped if a SYSTEM Fault caused the shutdown.

All fault data

```
FAULT HIST XX ALL FAULTS ZZ OF WW
YYYYYYYYYYYYYYYYYYYYYYYYYYYYYYYYYYYY
```

The ALL FAULT display indicates whether a fault occurred while the unit is shutting down on another fault.

If a control panel fault occurred while the unit is shutting down on a VSD fault before it is reset, the control panel fault is an ALL FAULT of the VSD fault.

If another VSD fault occurs while the unit is shutting down on a VSD fault, the next VSD fault will be registered as an ALL FAULT of the VSD fault.

If a VSD fault occurs during the ramp down shutdown of a control panel fault, the VSD fault is registered as a new fault, not an ALL FAULT.

XX is the history number, YYY is the ALL FAULT description, ZZ is the ALL FAULT number and WW is the total number of All Faults for the current history. Sometimes, multiple faults may occur during the shutdown and multiple displays will be observed when scrolling through the data using the ▼ arrow. In most cases, the ALL FAULT display will indicate NONE. The ALL FAULT display will only indicate the cause of the fault. No additional chiller information will be displayed under the ALL FAULT, since a snapshot of all chiller data was taken at the time of the first fault.

Unit data

Evaporator leaving and entering chilled liquid temperatures

```
UNIT CHILLED LIQUID LEAVING = XXX.X °F
                   ENTERING = XXX.X °F
```

This message indicates the leaving and entering chilled liquid temperatures at the time of the fault.

Ambient air temperature

```
UNIT
 OUTSIDE AMBIENT AIR TEMP = XXX.X °F
```

This message indicates the ambient air temperature at the time of the fault.

© 2025 Johnson Controls. All rights reserved.

Load/unload timers

```
UNIT          LOAD  TIMER = XXX SEC
            UNLOAD  TIMER = XXX SEC
```

This message indicates remaining time on the load and unload timers at the time of the fault.

Chilled liquid temperature error and rate of change

```
UNIT          TEMP  ERROR = XXX.X °F
                    RATE = XXX.X °F/M
```

This message indicates the temperature error between the actual and the programmed setpoint at the time of the fault and the rate of temperature change.

Programmed lead system selection and flow switch status

```
UNIT   LEAD  SYSTEM  NUMBER = X
                FLOW  SWITCH = XXX
```

This message indicates the designated lead system at the time of the fault and whether the flow switch was ON (Closed) or OFF (Open) at the time of the fault.

Evaporator pump and evaporator heater status

```
UNIT          EVAP  PUMP  RUN = XXX
                EVAP  HEATER = XXX
```

This message indicates the status of the evaporator pump and the evaporator heater at the time of the fault. XXX indicates ON or OFF.

Active remote control status

```
UNIT  ACTIVE  REMOTE  CONTROL = XXXXXX
```

This message indicates whether the system was operating under Active Remote Control (RCC, ISN, LOAD, TEMP, or SOUND) or standard control (NONE) at the time of the fault.

```
UNIT  SOUND  LIMIT      LOCAL = XXX %
        ISN = XXX      REMOTE = XXX %
```

This message indicates that sound limiting was in effect, the amount, and whether it was local or remotely limited.

VSD data

VSD actual and command frequency

```
VSD  FREQUENCY      ACTUAL = XXX.X HZ
                  COMMAND = XXX.X HZ
```

This message indicates the VSD actual operating frequency and the command frequency at the time of the fault. Actual and command may not match due to load/unload timers, limitation of 1 Hz per load/unload increment, and to allowable acceleration/deceleration of the motor.

Compressor amps and %FLA

The message indicates the compressor %FLA and motor currents for systems 1 and 2 at the time of the fault.

```
COMP  1   = XXX  AMPS        = XXX %FLA
COMP  2   = XXX  AMPS        = XXX %FLA
```

VSD current limit

```
VSD  CURRENT  LIMIT   LOCAL = XXX %FLA
  ISN = XXX          REMOTE = XXX %FLA
```

This message displays the current limit values as set locally, by an ISN, or a remote current limiting input at the time of the fault.

DC BUS voltage

```
VSD            DC  BUS  VOLTAGE = XXX  VDC
```

This message displays the DC Bus voltage at the time of the fault.

VSD internal ambient temp

```
VSD     INTERNAL  AMBIENT  TEMP = XXX.X °F
        COOLING  SYSTEM  STATUS = YYY
```

This message displays the VSD/Microprocessor internal ambient cabinet temperature and the cooling system status (ON or OFF) at the time of the fault.

IGBT baseplate temperature

```
VSD  IGBT  BASEPLATE  TEMPS  T1 = XXX °F
                             T2 = XXX °F
```

This message displays the IGBT highest baseplate temperature for 2 and 3 compressor units at the time of the fault. 4 compressor units display temperatures for 1/3 (T1) and 2/4 (T2).

© 2025 Johnson Controls. All rights reserved.

Precharge signal status and VSD cooling status

```
VSD     PRECHARGE  SIGNAL = XXX
```

This display provides the state of the precharge signal, where XXX is either ON or OFF at the time of the fault.

Compressor #1 and #2, 105% FLA motor overload current setting

```
VSD     COMP 1 MOTOR OVERLOAD = XXX AMPS
        COMP 2 MOTOR OVERLOAD = XXX AMPS
```

This message displays the setting of the VSD's 100% FLA potentiometer for Compressor #1 and #2 at the time of the fault.

System data

System #1 pressures

```
SYS 1 PRESSURES                OIL = XXXX PSIG
                        DISCHARGE = XXXX PSIG
```

This message displays the measured system oil and discharge pressures at the time of the fault.

```
SYS 1 PRESSURES      SUCTION = XXXX PSIG
              CONDENSER LIQUID = XXXX PSIG
```

This message displays the measured system suction and condenser liquid line pressure at the time of the fault.

System # 1 temperatures

```
SYS 1 TEMPERATURES                OIL=XXX.X°F
                        EDUCTOR = XXX.X °F
```

This message displays the measured system oil and eductor temperatures at the time of the fault.

```
SYS 1 CONDENSER LIQUID TEMP = XXX.X °F
SUBCOOLING = XXX.X   SAT TEMP = XXX.X °F
```

This message displays the condenser liquid, liquid line subcooling and saturated discharge temperatures at the time of the fault.

```
SYS 1 DISCHARGE                TEMP = XXX.X °F
SUPERHEAT = XXX.X          SAT TEMP = XXX.X °F
```

This message displays the system discharge, discharge superheat and saturated discharge temperatures at the time of the fault.

Compressor speed and heater status

```
SYS 1 COMPRESSOR          SPEED = XXX.X %
                         HEATER = XXX.X °F
```

This message indicates the compressor speed in % and the heater status at the time of the fault.

System #1 motor temperatures

```
SYS 1 MOTOR TEMPS          T1 = XXX.X °F
        T2 = XXX.X         T3 = XXX.X °F
```

This message displays the System 1 motor thermistor temperatures at the time of the fault.

Flash tank level and economizer position

```
SYS 1              FLASH TANK LEVEL Y 512 ADC
                    ECONOMIZER VALVE = XXX.X %
```

This message displays the flash tank level and the economizer valve position in % at the time of the fault.

Condenser subcooling and condenser drain valve position

```
SYS 1     CONDENSER SUBCOOLING = XXX.X °F
           CONDENSER DRAIN VALVE = XXX.X %
```

This message displays the condenser subcooling and the Condenser Drain Valve position at the time of the fault.

Condenser fans

```
SYS 1                CONDENSER FANS ON = X
```

```
SYS 1                CONDENSER FANS ON = X
                 VSD FAN SPEED XX.X V = XXX %
```

This message displays the number of condenser fans ON or the optional VSD fan control speed signal to the inverter and the % of full speed.

VI step solenoid

```
SYS 1              VI STEP SOLENOID 1 = XXX
                   VI STEP SOLENOID 2 = XXX
```

This message displays whether the VI solenoids were ON or OFF at the time of the fault.

8

© 2025 Johnson Controls. All rights reserved.

Compressor #1 run time

```
SYS 1 RUN TIME
XX DAYS XX HOURS XX MINUTES XX SECONDS
```

This message displays the system run time since the last start in days, hours, minutes, and seconds at the time of the fault.

System #1 run signals

```
SYS 1 RUN SIGNALS          RELAY = XXX
 RUN PERM = XXX          SOFTWARE = XXX
```

This message displays the System Run Signal Relay (Relay Output Board) status, Run Permissive Input status, and the Internal Software (microprocessor command) ON/OFF Start status. The status of each will indicate either ON or OFF.

System 2 data

Data for the system 2 at the time of the fault is displayed in the same sequence as the system #1 data.

Compressor operating hours and starts

```
HOURS 1=XXXXX, 2=XXXXX
 START 1=XXXXX, 2=XXXXX
```

This message displays compressor operating hours and compressor starts at the time of the fault.

Chilled liquid setpoint cooling setpoints

```
SETPOINTS
LOCAL COOLING SETPOINT   = XXX.X °F
```

This message displays the programmed cooling setpoint at the time of the fault.

```
SETPOINTS
LOCAL CONTROL RANGE      = +/- X.X °F
```

This message displays the programmed Control Range at the time of the fault.

Remote setpoint and range

```
SETPOINTS REMOTE SETPOINT = XXX.X °F
    REMOTE CONTROL RANGE = +/- X.X °F
```

This message displays the remote setpoint and Control Range at the time of the fault.

Maximum remote temperature setpoint

```
SETPOINTS
MAXIMUM REMOTE TEMP RESET = XXX.X °F
```

This message displays the maximum remote reset programmed at the time of the fault.

Options

Display language

```
OPTIONS      DISPLAY LANGUAGE
◄ ►      XXXXXXXXXXXXXXXXXXXX
```

This message displays the language selected at the time of the fault.

Chilled liquid cooling mode

```
OPTIONS      CHILLED LIQUID COOLING MODE
◄ ►          WATER COOLING
```

This message displays the chilled liquid temperature mode (water or glycol) selected at the time of the fault.

Local/remote control mode

```
OPTIONS      CHILLED LIQUID COOLING MODE
◄ ►          GLYCOL COOLING
```

This message indicates whether Local or Remote Control Mode was selected at the time of the fault.

```
OPTIONS   LOCAL / REMOTE CONTROL MODE
◄ ►      XXXXXXXXXXXXXXXXXXXX
```

When Remote Control Mode is selected, control of the Chilled Liquid Setpoint is from a remote device such as an ISN/BAS controller.

Display units mode

```
OPTIONS   DISPLAY UNITS
◄ ►      XXXXXXXXXXXXXXXXXXXX
```

This message indicates whether SI (°C, barg) or Imperial units (°F, psig) was selected at the time of the fault.

© 2025 Johnson Controls. All rights reserved.

System lead/lag control mode

```
OPTIONS   LEAD / LAG  CONTROL  MODE
◄ ►      XXXXXXXXXXXXXXXXXXXX
```

This message indicates the type of lead lag control selected at the time of the fault. Three choices are available:

- Automatic
- Sys 1 Lead
- Sys 2 Lead

The default mode will be AUTOMATIC.

Remote temperature reset

```
OPTIONS       REMOTE  TEMP  RESET  INPUT
◄ ►                          XXXXXXXX
```

This message indicates whether temperature reset was active or disabled at the chiller keypad at the time of the fault and if active, the type of reset signal selected.

If the option is not factory enabled, the option will not appear.

Remote current reset

```
OPTIONS       REMOTE  CURRENT  LIMIT  INPUT
◄ ►                          XXXXXXXXXXX
```

This message indicates whether remote current reset was active or disabled at the chiller keypad at the time of the fault and if active, the type of reset signal selected.

If the option is not factory enabled, the option will not appear.

Remote sound limit selection

```
OPTIONS       REMOTE  SOUND  LIMIT  INPUT
◄ ►                          XXXXXXXXXXX
```

This message indicates whether remote sound limit was active or disabled at the chiller keypad at the time of the fault and if active, the type of reset signal selected.

If the option is not factory enabled, the option will not appear.

Program values

Suction pressure cutout

```
PROGRAM
SUCTION  PRESSURE  CUTOUT        =XXX.XPSIG
```

This message indicates the he suction pressure cutout programmed at the time of the fault.

Low ambient cutout

```
PROGRAM
LOW   AMBIENT  TEMP  CUTOUT        = XXX.X °F
```

This message displays the low ambient temp cutout programmed at the time of the fault.

Low leaving chilled liquid temp cutout

```
PROGRAM
 LEAVING  LIQUID  TEMP  CUTOUT  = XXX.X °F
```

This message displays the low leaving chilled liquid temperature cutout programmed at the time of the fault.

Motor current limit

```
PROGRAM
MOTOR  CURRENT  LIMIT        = XXX %FLA
```

This message indicates the motor current limit programmed at the time of the fault.

Pulldown current limit

```
PROGRAM
PULLDOWN  CURRENT  LIMIT  = XXX %FLA
```

This message indicates the pulldown current limit programmed at the time of the fault.

Pulldown current limit time

```
PROGRAM
PULLDOWN  CURRENT  LIMIT  TIME    = XXX MIN
```

This message indicates the pulldown current limit time programmed at the time of the fault.

Condenser subcooling setpoint

```
PROGRAM
SUBCOOLING  SETPOINT              = XXX.X °F
```

This message indicates the liquid subcooling setpoint programmed at the time of the fault.

Unit ID number

```
PROGRAM
REMOTE  UNIT  ID  NUMBER     = X
```

This indicates the unit ID # programmed at the time of the fault.

© 2025 Johnson Controls. All rights reserved.

Sound limit setpoint

```
PROGRAM
SOUND LIMIT SETPOINT      = XXX %
```

This indicates the sound limit setpoint programmed at the time of the fault, if the sound limit option is activated at the factory. If the option is not factory activated, the display will not appear.

Eductor differential temperature

```
PROGRAM   ◄DEF  XXXXX LO XXXXX HI XXXXX
EDUCTOR DIFFERENTIAL              = XXX °F
```

This message indicates the programmed eductor differential temperature at the time of the fault.

Eductor safety time

```
PROGRAM   ◄DEF  XXXXX LO XXXXX HI XXXXX
EDUCTOR SAFETY TIME               = XXX MIN
```

This message indicates the eductor safety time programmed at the time of the fault.

Motor temperature unload

```
PROGRAM ◄DEF  XXXXX LO XXXXX HI XXXXX
MOTOR TEMPERATURE UNLOAD          = XXX °F
```

This message indicates the motor temperature programmed at the time of the fault.

© 2025 Johnson Controls. All rights reserved.

Setpoints key

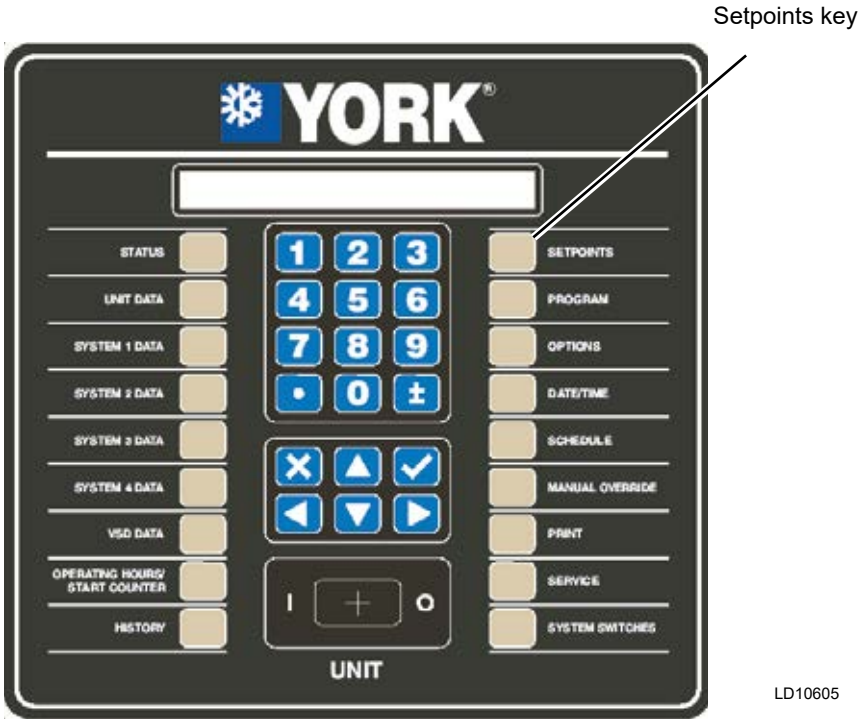

Setpoints key operation

Cooling setpoints and ranges may be programmed by pressing the SETPOINTS key. The first set point entry screen will be displayed as shown below. The first line of the display will show the chiller default (DEF), minimum acceptable value (LO) and maximum acceptable value (HI). The second line shows the actual programmed value. *Table 23 on page 166* also shows the allowable ranges for the cooling setpoints and Control Ranges. Note that the Imperial units are exact values while the Metric units are only approximate.

```
SETPOINTS  ◄DEF XXXXX LO XXXXX HI XXXXX
LOCAL COOLING SETPOINT     = XXX.X °F
```

Pressing the SETPOINTS key a second time or the ▼ (ARROW) key will display the leaving chilled liquid Control Range, default, and low/high limits.

```
SETPOINTS  ◄DEF XXXXX LO XXXXX HI XXXXX
LOCAL CONTROL RANGE     = +/- X.X °F
```

Pressing the SETPOINTS key or the ▼ (ARROW) key a third time will display the remote setpoint and cooling range. This display automatically updates about every 2 seconds. The following is the remote setpoint message:

```
SETPOINTS REMOTE SETPOINT = XXX.X °F
    REMOTE CONTROL RANGE = +/- X.X °F
```

If there is no remote setpoint being utilized, the remote setpoint value will be displayed as XXXXXX and the remote Control Range will display XXX.

Pressing the SETPOINTS key or the Arrow key a fourth time will bring up a screen that allows the Maximum Remote Temperature Reset to be programmed. This message is as follows:

```
SETPOINTS  ◄DEF XXXXX LO XXXXX HI XXXXX
MAXIMUM REMOTE TEMP RESET   = XXX.X °F
```

The values displayed under each of the key presses may be changed by keying in new values and pressing the ✓ (ENTER) key to store the new value into memory. Where more than one value may be keyed in on a display, a portion of the data that does not need updating may be skipped by pressing the ✓ (ENTER) key. The ✓(ENTER) key must also be pressed after the last value in the display to store the data into memory.

© 2025 Johnson Controls. All rights reserved.

The ▲ (ARROW) key allows scrolling back through the setpoints displays.

The minimum, maximum, and default values allowed under the SETPOINTS key are provided in *Table 23 on page 166*.

Table 23 - Setpoint limits

Program value	Mode	Low limit	High limit	Default
Leaving chilled liquid setpoint	Water cooling	40.0°F	60.0°F	44.0°F
		4.4°C	15.6°C	6.7°C
	Glycol cooling	15.0°F	70.0°F	44.0°F
		-9.4°C	15.6°C	6.7°C
Leaving chilled liquid control range		1.5°F	2.5°F	2.0°F
		0.8°C	1.4°C	1.1°C
Maximum remote temperature reset		2°F	40°F	20°F
		1°C	22°C	11°C

© 2025 Johnson Controls. All rights reserved.

Program key

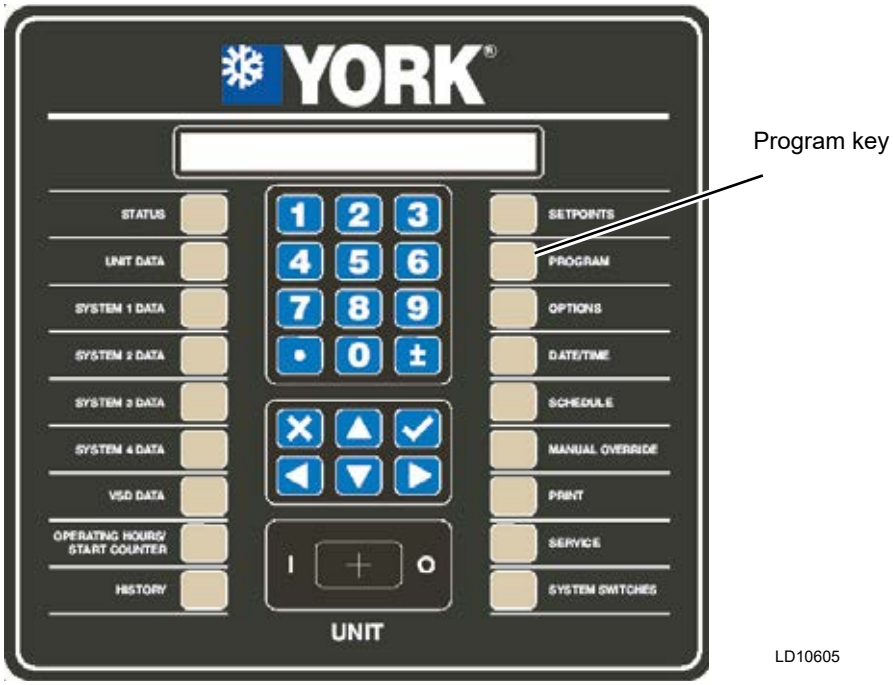

Program key operation

Various operating parameters are programmable by the user. These are modified by pressing the PROGRAM key and then the ✓ (ENTER) key to enter Program Mode. A listing of the limits of the programmable values is shown in *Table 24*. Note that the Imperial units are exact values, while Metric units are only approximate.

The ▲ and ▼ (ARROW) keys are used to scroll through the user programmable values. A value may be changed by keying in the new value and pressing the ✓ (ENTER) key to store the new value in memory. The cursor will be displayed on the screen when a number key is pressed. The first line of each message will indicate the chiller default (DEF) value, lowest acceptable programmable value (LO), and highest acceptable programmable value (HI). The user programmable value is programmed ON in the second line of the message.

When the PROGRAM key is first pressed, the following display will appear indicating the user is in the program mode:

```
PROGRAM MODE XXXX
 PRESS ENTER KEY TO CONTINUE
```

To display the first programmable selection, press the ✓ (ENTER) key again.

Suction pressure cutout

```
PROGRAM   ◄DEF XXXXX LO XXXXX HI XXXXX
SUCTION PRESSURE CUTOUT    = XXX.X PSIG
```

The suction pressure cutout is protects the chiller from a low refrigerant condition. It also helps protect from a freeze-up due to low or no chilled liquid flow. However, it is only a back-up for a flow switch and cannot protect against an evaporator freeze under many conditions. This cutout is programmable and should generally be programmed for 1.65 barg (24 psig) for chilled water cooling for R-134a system, and 1.93 barg (28 psig) for R-513A system.

For R-134a refrigerant, the cutout is programmable between 1.65 barg and 2.48 barg (24.0 psig and 36.0 psig) in the Water Cooling mode and 0.34 barg and 2.28 barg (5.0 psig and 36.0 psig) in the Glycol Cooling mode. The default value for both modes will be 1.65 barg (24.0 psig).

For R-513A refrigerant, the cutout is programmable between 1.93 barg and 2.80 barg (28.0 psig and 40.7 psig) in the Water Cooling mode and 0.53 barg and 2.80 barg (7.7 psig and 40.7 psig) in the Glycol Cooling mode. The default value for both modes will be 1.93 barg (28.0 psig).

© 2025 Johnson Controls. All rights reserved.

Low ambient cutout

```
PROGRAM   ◄DEF XXXXX LO XXXXX HI XXXXX
LOW AMBIENT TEMP CUTOUT    = XXX.X °F
```

The low ambient temp cutout allows programming the outdoor temperature at which it is desired to shut down the chiller to utilize other methods of cooling.

The cutout is programmable between -18.9°C (-2.0°F) and 10.0°C (50°F) with a -3.9°C (25°F) default.

Low leaving liquid temp cutout

```
PROGRAM   ◄DEF XXXXX LO XXXXX HI XXXXX
LEAVING LIQUID TEMP CUTOUT = XXX.X °F
```

The leaving chilled liquid temp cutout is programmed to avoid freezing the evaporator due to excessively low chilled liquid temperatures. The cutout is automatically set at 2.2 °C (36°F) in the Water Cooling mode and is programmable in the Glycol Cooling mode. In the Glycol Cooling Mode, the cutout is programmable from -11.7°C to 2.2°C (11.0°F to 36.0°F) with a default of 2.2°C (36.0°F).

Motor current limit

```
PROGRAM   ◄DEF XXXXX LO XXXXX HI XXXXX
MOTOR CURRENT LIMIT       = XXX % FLA
```

The motor current limit %FLA is programmable. This allows the microprocessor to limit a system before it faults on high current. The limit point is set at 100%. The unload point is programmable from 30% to 100% with a default of 100%.

Pulldown current limit

```
PROGRAM   ◄DEF XXXXX LO XXXXX HI XXXXX
PULLDOWN CURRENT LIMIT       = XXX % FLA
```

The pulldown current limit %FLA is programmable. This allows the microprocessor to limit a system on pulldown limiting for the purpose of peak time energy savings. The limit point is set at 100%. The pulldown limit point is programmable from 30% to 100% with a default of 100%. Be aware when using pulldown motor current limit, the chiller may not be able to load to satisfy temperature demand.

Pulldown current limit time

```
PROGRAM   ◄DEF XXXXX LO XXXXX HI XXXXX
PULLDOWN CURRENT LIMIT TIME      = XXX MIN
```

The pulldown current limit time is programmable. This allows the microprocessor to limit a system on pulldown limiting for a defined period of time for the purpose of peak time energy savings. The pulldown limit point is programmable from 0 to 255 with a default of 0 Min.

Subcooling setpoint

```
PROGRAM   ◄DEF XXXXX LO XXXXX HI XXXXX
SUBCOOLING SETPOINT              = XXX.X °F
```

The liquid subcooling setpoint is programmable from 0.0 to 11.1°C (0.0 to 20.0°F). The default value for subcooling setpoint is 5.6°C (10°F).

Unit ID number

```
PROGRAM   ◄DEF XXXXX LO XXXXX HI XXXXX
REMOTE UNIT ID NUMBER = X
```

For purposes of remote communications, multiple chillers may be connected to an RS-485 communications bus. To allow communications to each chiller, a chiller ID number may be programmed into memory. On a single chiller application, the value will be “0”.

Sound limit setpoint

```
PROGRAM   ◄DEF XXXXX LO XXXXX HI XXXXX
SOUND LIMIT SETPOINT     = XXX %
```

The sound limit setpoint is programmable from 0% to 100 % with a 0% default. 0% allows operating up to the full speed capability of the unit with no sound limiting. The sound limit control setting is programmed for 0% unless sound limiting is utilized on the chiller. Sound limiting will only permit the unit to run to a frequency less than the maximum speed capability of the unit. Programming a value of 1% would be the minimum sound limiting that can be programmed and 100% will be the maximum. 100% only allows the unit speed to operate at the minimum frequency. The sound limit % is programmed somewhere between 0% and 100% according to the limiting needed to satisfy the sound requirements of the site. Sound limiting must be utilized in areas sensitive to noise during night-time hours. The sound limit display is only present if the sound limit option is programmed at the factory.

Eductor differential

```
PROGRAM   ◄DEF XXXXX LO XXXXX HI XXXXX
EDUCTOR DIFFERENTIAL              = XXX °F
```

The eductor temperature differential is programmable from 0°C to 10.0°C (0°F to 50.0°F). The default value is 5.0°F.

The programmed temperature ensures the micro will

© 2025 Johnson Controls. All rights reserved.

sense a loss of educator oil flow, if the temperature differential rises. A small differential of 2.8°C (5.0°F) is recommended.

Eductor safety time

```
PROGRAM    ◄DEF XXXXX LO XXXXX HI XXXXX
EDUCTOR SAFETY TIME          = XXXX MIN
```

The educator safety time allows programming the time period the system is permitted to run if the safety threshold is exceeded. The safety time is programmable for 10 minutes to 1000 minutes with 10 minutes as the default. A minimum safety time is recommended to ensure the compressor is not starved for oil for long periods of time due to the educator circuit not siphoning oil from the evaporator. A minimum time of 10 minutes is recommended as the program point.

Motor temperature unload

```
PROGRAM    ◄DEF XXXXX LO XXXXX HI XXXXX
MOTOR TEMPERATURE UNLOAD     = XXX °F
```

The motor temperature unload is programmable from 65.6°C (150.0°F) to 121.1°C 250.0°F. The default value is 115.5°C (240.0°F). The programmed temperature ensures the micro will sense a rise in motor temperature due to a lack of compressor cooling. If the temperature rises above the programmed threshold, the system will unload the compressor by reducing speed. An unload temperature of 115.5°C (240.0°F) is recommended to ensure the system does provides maximum capacity.

Default values

A listing of the low limits, high limits, and default values for each of the programmable values is noted in each display and can be found in *Table 24 on page 169*. Note that the Imperial units are exact values while the Metric units are only approximate.

Table 24 - Programmable operating parameters

Program value	Mode	Low limit	High limit	Default
Suction pressure cutout	Water cooling (R-134a)	26.1 psig	36.0 psig	26.1 psig
		1.80 barg	2.48 barg	1.80 barg
	Glycol cooling (R-134a)	5.0 psig	36.0 psig	26.1 psig
		0.34 barg	2.48 barg	1.80 barg
Suction pressure cutout	Water cooling (R-513A)	30.2 psig	40.7 psig	30.2 psig
		2.08 barg	2.80 barg	2.08 barg
	Glycol cooling (R-513A)	7.7 psig	40.7 psig	30.2 psig
		0.53 barg	2.80 barg	2.08 barg
Low ambient air temperature cutout		-10.0°F	50.0°F	-2.0°F
		-23.3°C	10°C	-18.9°C
Leaving chilled liquid temperature cutout	Water cooling			36.0°F
				2.2°C
	Glycol cooling	11.0°F	36.0°F	36.0°F
		-11.7°C	2.2°C	2.2°C
Motor current limit		30% FLA	103% FLA	103% FLA
Pulldown motor current limit		30% FLA	100% FLA	100% FLA
Pulldown motor current limit time		0 min	255 min	0 min
Condenser subcooling setpoint		0.0°F	20.0°F	10°F
		0.0°C	11.1°C	5.6°C
Unit ID number		0	7	0
Sound limit setpoint	Sound limit option enabled	0%	100%	0%
Eductor temperature differential		5.0°F	50.0°F	15.0°F
		2.77°C	27.8°C	8.3°C
Eductor safety time		10 min	1000 min	30 min*
Motor temperature unload		150.0°F	250.0°F	240.0°F
		65.6°C	121.1°C	115.5°C

© 2025 Johnson Controls. All rights reserved.

Options key

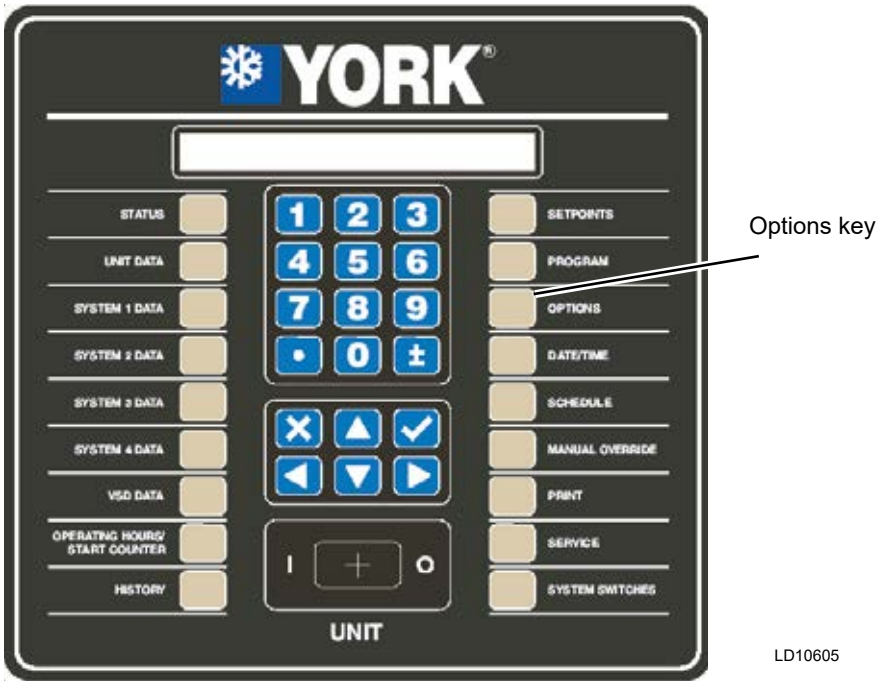

LD10605

Options key operation

The OPTIONS key provides the user with a display of unit configuration and the capability to modify the configuration. These options can only be viewed under the OPTIONS key. To view the current options settings, press the OPTIONS key. Each press of the OPTIONS key or press of the ▲ or ▼ (ARROW) keys will scroll to the next option setting. The ◄ and ► (ARROW) keys allow changing the option choices. The ✓ (ENTER) key must be pressed after a selection is made to save the change in memory.

An explanation of each option message is provided.

Display language selection

The display language can be selected for English, Italian, Polish, Hungarian, German, French, Portuguese, and Spanish.

```
OPTIONS      DISPLAY LANGUAGE
◄ ►          XXXXXXXXXXXXXXXXXX
```

The default language will be English.

Local/remote control mode selection

Local or Remote Control Mode allows the user to select the chilled liquid temperature control mode.

```
OPTIONS      LOCAL / REMOTE CONTROL MODE
◄ ►          XXXXXXXXXXXXXXXXXX
```

When LOCAL CONTROL mode is selected, chilled liquid control is from the keypad of the chiller. In local mode, a remote device can read system data, but not reset operating parameters.

```
OPTIONS      LOCAL / REMOTE CONTROL MODE
◄ ►          LOCAL CONTROL
```

When REMOTE CONTROL mode is selected, control of the chilled liquid setpoint is from a remote device such as an ISN/BAS controller.

```
OPTIONS      LOCAL / REMOTE CONTROL MODE
◄ ►          REMOTE CONTROL
```

The default mode will be LOCAL CONTROL.

© 2025 Johnson Controls. All rights reserved.

Display units selection

Imperial or SI display units may be selected for data display.

```
OPTIONS        DISPLAY UNITS
◄ ►            XXXXXXXXXXXXXXXXX
```

The user may select system operating temperatures and pressures to be displayed in either SI (°C, barg) or Imperial units (°F, psig).

```
OPTIONS        DISPLAY UNITS
◄ ►            IMPERIAL
```

```
OPTIONS        DISPLAY UNITS
◄ ►            SI
```

The default mode is IMPERIAL.

System lead/lag control mode selection

The operator may select the type of lead/lag control desired.

```
OPTIONS        LEAD / LAG CONTROL MODE
◄ ►            XXXXXXXXXXXXXXXXX
```

In most cases, automatic lead/lag will be selected. When automatic lead/lag is selected, the microprocessor will attempt to balance run time by switching the lead compressor whenever all compressors are shut OFF. If a compressor is not able to run when the microprocessor attempts a start, the microprocessor will select another compressor in an effort to control chilled liquid temperature. Manual lead/lag allows selecting a specific compressor to be the lead.

```
OPTIONS        LEAD / LAG CONTROL MODE
◄ ►            AUTOMATIC
```

The default mode will be AUTOMATIC.

Lag selections of individual systems will appear as:

```
OPTIONS        LEAD / LAG CONTROL MODE
◄ ►            MANUAL SYS 1 LEAD
```

```
OPTIONS        LEAD / LAG CONTROL MODE
◄ ►            MANUAL SYS 2 LEAD
```

Remote temperature reset selection

Remote temperature reset from an external source may be tied directly into the chiller microprocessor board.

```
OPTIONS        REMOTE TEMP RESET INPUT
◄ ►            XXXXXXXXXXXXXXXXX
```

Selections may be made for DISABLED (no signal), 0 VDC to 10 VDC, 2 VDC to 10 VDC, 0 mA to 20 mA, and 4 mA to 20 ma.

```
OPTIONS        REMOTE TEMP RESET INPUT
◄ ►            DISABLED
```

```
OPTIONS        REMOTE TEMP RESET INPUT
◄ ►            0.0 TO 10.0 VOLTS DC
```

```
OPTIONS        REMOTE TEMP RESET INPUT
◄ ►            2.0 TO 10.0 VOLTS DC
```

```
OPTIONS        REMOTE TEMP RESET INPUT
◄ ►            0.0 TO 20.0 MILLIAMPS
```

```
OPTIONS        REMOTE TEMP RESET INPUT
◄ ►            4.0 TO 20.0 MILLIAMPS
```

The default setting for Remote Temp Reset is DISABLED. This display will only appear if the remote temperature limit option is enabled under the Unit Setup Mode.

Remote current limit input selection

Remote current limit from an external source may be tied directly into the chiller microprocessor board.

```
OPTIONS        REMOTE CURRENT LIMIT INPUT
◄ ►            XXXXXXXXXXXXXXXXXXXX
```

Selections may be made for DISABLED (no signal), 0 VDC to 10 VDC, 2 VDC to 10 VDC, 0 mA to 20 ma, and 4 mA to 20 mA.

```
OPTIONS        REMOTE CURRENT LIMIT INPUT
◄ ►            DISABLED
```

```
OPTIONS        REMOTE CURRENT LIMIT INPUT
◄ ►            0.0 TO 10.0 VOLTS DC
```

```
OPTIONS        REMOTE CURRENT LIMIT INPUT
◄ ►            2.0 TO 10 VOLTS DC
```

```
OPTIONS        REMOTE CURRENT LIMIT INPUT
◄ ►            0.0 TO 20.0 MILLIAMPS
```


© 2025 Johnson Controls. All rights reserved.

```
OPTIONS      REMOTE CURRENT LIMIT INPUT
◄ ►          4.0 TO 20.0 MILLIAMPS
```

The default setting for Remote Current Reset is DISABLED. This display will only appear if the remote current limit option is enabled under the Unit Setup Mode.

Remote sound limit selection

Remote sound limit from an external source may be tied directly into the chiller microprocessor board.

```
OPTIONS      REMOTE SOUND LIMIT INPUT
◄ ►          XXXXXXXXXXXXXXXXXXXX
```

Selections may be made for DISABLED (no signal), 0 VDC to 10 VDC, 2 VDC to 10 VDC, 0 mA to 20 mA, and 4 mA to 20 mA.

```
OPTIONS      REMOTE SOUND LIMIT INPUT
◄ ►          DISABLED
```

```
OPTIONS      REMOTE SOUND LIMIT INPUT
◄ ►          0.0 TO 10.0 VOLTS DC
```

```
OPTIONS      REMOTE SOUND LIMIT INPUT
◄ ►          2.0 TO 10.0 VOLTS DC
```

```
OPTIONS      REMOTE SOUND LIMIT INPUT
◄ ►          0.0 TO 20.0 MILLIAMPS
```

```
OPTIONS      REMOTE SOUND LIMIT INPUT
◄ ►          4.0 TO 20.0 MILLIAMPS
```

The default setting for Remote Sound Limit is DISABLED. This display will only appear if the remote sound limit option is enabled under the Unit Setup Mode.

Low ambient cutout enable/disable

The low ambient cutout may be enabled or disabled. When enabled, the chiller will cut OFF when the low ambient cutout is reached. When disabled, the chiller will run at any temperature.

```
OPTIONS      LOW AMBIENT TEMPERATURE CUTOUT
◄ ►          ENABLED
```

```
OPTIONS      LOW AMBIENT TEMPERATURE CUTOUT
◄ ►          DISABLED
```

The default setting for the low ambient cutout will be ENABLED.

Variable water outlet control enabled/disabled

This option is for the purpose of Edo-Design compliance, the default setting for this option is DISABLED.

```
OPTIONS      VARIABLE WATER OUTLET CONTROL
◄ ►          ENABLED
```

```
OPTIONS      VARIABLE WATER OUTLET CONTROL
◄ ►          DISABLED
```


© 2025 Johnson Controls. All rights reserved.

Date/time and schedule keys

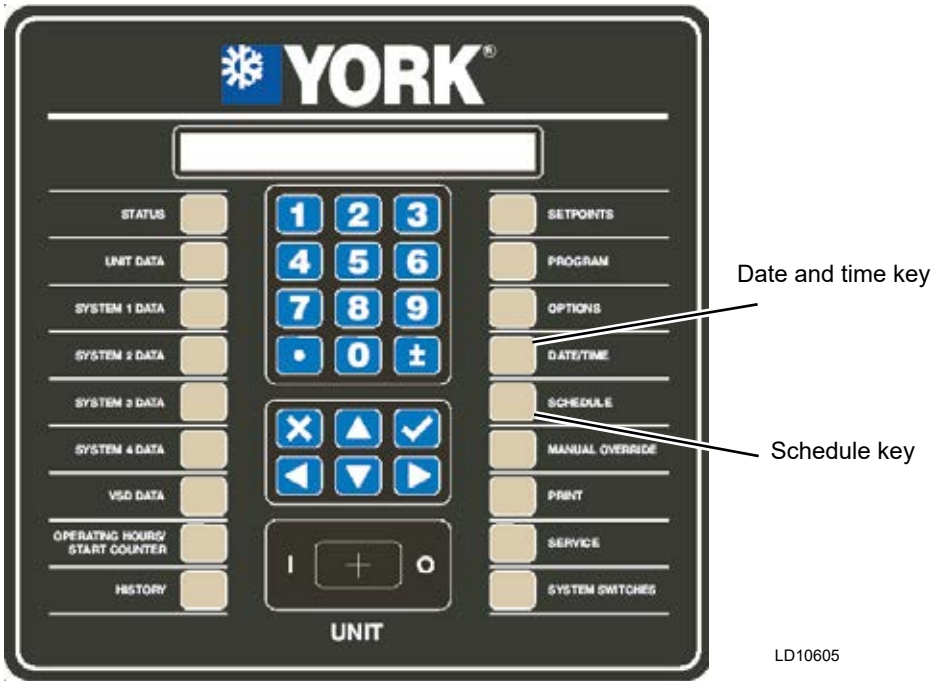

Date/time key operation

When the DATE/TIME key is pressed, the chiller microprocessor will display the date and the time. This feature is useful and required for using the Daily Schedule. It is also a valuable tool for troubleshooting to allow a technician to determine the time of the fault, which is stored in the history memory buffers. When the DATE/TIME key is pressed, the following first display screen will be displayed:

```
CLOCK   FRI   18-JUN-2011   10:15:33 AM
DAY  OF  WEEK  ◄ ►              = XXX
```

Whenever any changes are made, the ✓ (ENTER) key must be pressed to store the data.

Pressing the ▲ or ▼ (Arrow) keys allows scrolling to the next programmed item. Pressing the ▼ (DOWN ARROW) key scrolls to the next item that can be programmed and the ▲ (UP ARROW) key scrolls to the previous item.

The day of the week is the first display and can be changed by pressing either the ◄ or ► (LEFT OR RIGHT ARROW) key to select the day. After the day is selected, the ✓ (ENTER) key must be pressed to store the data.

```
CLOCK   FRI   18-JUN-2011   10:15:33 AM
DAY  OF  MONTH                  = XX
```

Pressing the ▼ (DOWN ARROW) key again scrolls to the day of the month:

```
CLOCK   FRI   18-JUN-2011   10:15:33 AM
DAY  OF  MONTH                  = XX
```

The day of the month can be selected by keying in the numerical value to select the day. After the day of the month is selected, the ✓ (ENTER) key must be pressed to store the data.

NOTE

A "0" must be typed in to select dates for days of the 1st through the 9th.

Pressing the ▼ (DOWN ARROW) key again scrolls to month:

```
CLOCK   FRI   18-JUN-2011   10:15:33 AM
MONTH  ◄ ►                      = XXX
```

© 2025 Johnson Controls. All rights reserved.

The month can be selected by scrolling through the months with the ◄ or ►arrow keys. After the month is selected, the ✓ (ENTER) key must be pressed to store the data.

Pressing the ▼ (DOWN ARROW) key again scrolls to the year:

```
CLOCK   FRI   18-JUN-2011   10:15:33 AM
YEAR                        = XXXX
```

The year can be selected by keying in the numerical value to select the year. After the year is selected, the ✓ (ENTER) key must be pressed to store the data.

Pressing the ▼ (DOWN ARROW) key again scrolls to the hour:

```
CLOCK   FRI   18-JUN-2011   10:15:33 AM
HOUR                        = XX
```

The hour can be selected by keying in the numerical value for the hour. After the hour is selected, the ✓ (ENTER) key must be pressed to store the data.

NOTE

One or two "0's" must be keyed in for minutes 00 through 09.

Pressing the ▼ (DOWN ARROW) key again scrolls to the minute:

```
CLOCK   FRI   18-JUN-2011   10:15:33 AM
MINUTE                      = XX
```

The minute can be selected by keying in the numerical value for the hour. After the minute is selected, the ✓ (ENTER) key must be pressed to store the data.

NOTE

One or two "0's" must be keyed in for minutes 00 through 09.

Pressing the ▼ (DOWN ARROW) key again scrolls to AM/PM:

```
CLOCK   FRI   18-JUN-2011   10:15:33 AM
AM/PM ◄ ►                   = XX
```

AM/PM can be selected by pressing the ◄ or ► (ARROW) keys. After the meridian is selected, the ✓(ENTER) key must be pressed to store the data.

Pressing the ▼ (DOWN ARROW) key again scrolls to the time format selection:

```
CLOCK   FRI   18-JUN-2011   10:15:33 AM
TIME FORMAT ◄ ►             = XXXXXXX
```

The time format may be displayed in either a 12 hour or 24 hour format. Selection can be changed by pressing the ◄ or ► (ARROW) keys. The ✓(ENTER) key must be pressed to store the data.

Schedule key operation

The Daily Schedule must be programmed for the unit start and stop times. To set the schedule, press the SCHEDULE key. The display will provide a message allowing access to 2 types of schedule information:

```
SCHEDULE     CHOOSE  SCHEDULE  TYPE
◄ ►          XXXXXXXXXXXXXXXXXXXXXXXXX
```

The schedule types are:

- UNIT OPERATING SCHEDULE
- (Default selection)
- SOUND LIMIT SCHEDULE
  (Only if Sound Limiting is enabled by the factory when the option is installed.)

The schedule type (UNIT OPERATING SCHEDULE or SOUND LIMIT SCHEDULE) may be changed by pressing the ◄ (LEFT ARROW) or ► (RIGHT ARROW) keys followed by the ✓(ENTER) key. The selection must be entered by pressing the ✓ (ENTER) key before a schedule display will appear.

Unit operating schedule

The Unit Operating Schedule is used to enable/disable the chiller unit on time of day. The chiller can be enabled and disabled once each day or it can be programmed to run continuously. Any time the daily or holiday schedule shuts the chiller down, the running systems will go through a controlled ramped shutdown. If the UNIT OPERATING SCHEDULE is selected under the CHOOSE SCHEDULE display, the following message will appear:

```
SCHEDULE     UNIT  OPERATING
MON  START = 06:00 AM   STOP = 10:00 PM
```

The line under the 0 above is the cursor. If the start time is wrong, it can be changed by keying in the new time from the numeric keypad. Once the correct values for the START hour and minute are entered, press

© 2025 Johnson Controls. All rights reserved.

the ✓ (ENTER) key. The cursor will then move to the AM/PM selection. The meridian (AM/PM) value may be changed by the ◄ (LEFT ARROW) or ► (RIGHT ARROW) keys and entered by pressing ✓ (ENTER) key. Repeat this process for the STOP time. Once a schedule is entered, the schedule for the next day will appear. The start and stop time of each day may be programmed differently.

To view the schedule without making a change, simply press the SCHEDULE key until the day you wish to view appears. The ▲ (UP ARROW) key will scroll backwards to the previous screen.

NOTE

If at any time the schedule is changed for Monday, all the other days will change to the new Monday schedule. This means if the Monday times are not applicable for the whole week, then the exceptional days would need to be reprogrammed to the desired schedule.

To program the chiller for 24 hour operation, program the start and stop times of each day of the week for 00:00.

After the SUN (Sunday) schedule appears on the display, a subsequent press of the SCHEDULE or ▲ (UP ARROW) key will display the Holiday schedule. This is a two-part display. The first reads:

```
SCHEDULE      UNIT OPERATING
HOL START = 00:00 AM STOP = 00:00 PM
```

The holiday times may be set using the same procedure as described above for the days of the week. Be sure to press the ✓ (ENTER) key after setting the START and STOP times to save the change in memory. Pressing the SCHEDULE key a second time, the display will show the individual days:

```
SCHEDULE      UNIT OPERATING
S M T W T F S  HOLIDAY NOTED BY *
```

The line below the empty space is the cursor and will move to the next or previous empty space when the ◄ (LEFT ARROW) or ► (RIGHT ARROW) keys and pressed. To set a day for the Holiday Schedule, the cursor must be moved to the space following the day of the week. The * key is then pressed and an "*" will appear in the space signifying that day as a holiday. The Holiday schedule must be programmed weekly. If there is no holiday, the "*" key is also used to delete the "*". The ✓ (ENTER) key is used to accept the holiday schedule for the entire week.

NOTE

The HOLIDAY SCHEDULE is a temporary schedule. Once the schedule is executed, the selected holidays will be cleared from memory for the following week.

Sound limit schedule

The SOUND LIMIT SCHEDULE allows setting the day and time when the user desires using the "SILENT NIGHT" factory programmed option to limit chiller loading and fan operation for reduced audible noise in the surrounding area. If the SOUND LIMIT SCHEDULE is selected under the CHOOSE SCHEDULE display, the following message will appear:

```
SCHEDULE      SOUND LIMIT   = XXX %
MON  START = 06:00 AM    STOP = 10:00 PM
```

The Sound Limit option can be enabled and disabled once each day or the chiller can be set to run continuously in this mode for sound limiting whenever the chiller is operating. When sound limiting is enabled, the unit will be limited by the Sound Limit setpoint % as set under the PROGRAM key. XXX in the display above will show the Sound Limit Setpoint % programmed under the PROGRAM key. 0% will cause no speed reduction, while 100% only allows running at minimum speed.

The START Time for a specific day (hour and minute) is entered using the same guidelines used for the start/stop schedules, and press the ✓ (ENTER) key to store it into memory. The cursor will then move to the AM/PM selection.

The AM/PM selection may be chosen using the ◄ (LEFT ARROW) or ► (RIGHT ARROW) keys and pressing ✓ (ENTER) key to store the value.

This process is repeated for the STOP time.

Once the schedule for a specific day is programmed and entered, the schedule for the next day will appear. The schedule for each day may be programmed the same or differently.

To view the schedule without changing it, simply press the SCHEDULE key or the ▼ (DOWN ARROW) key until the desired day is displayed. The ▲ (UP ARROW) key will scroll backwards to the previous screen.

© 2025 Johnson Controls. All rights reserved.

Manual override key

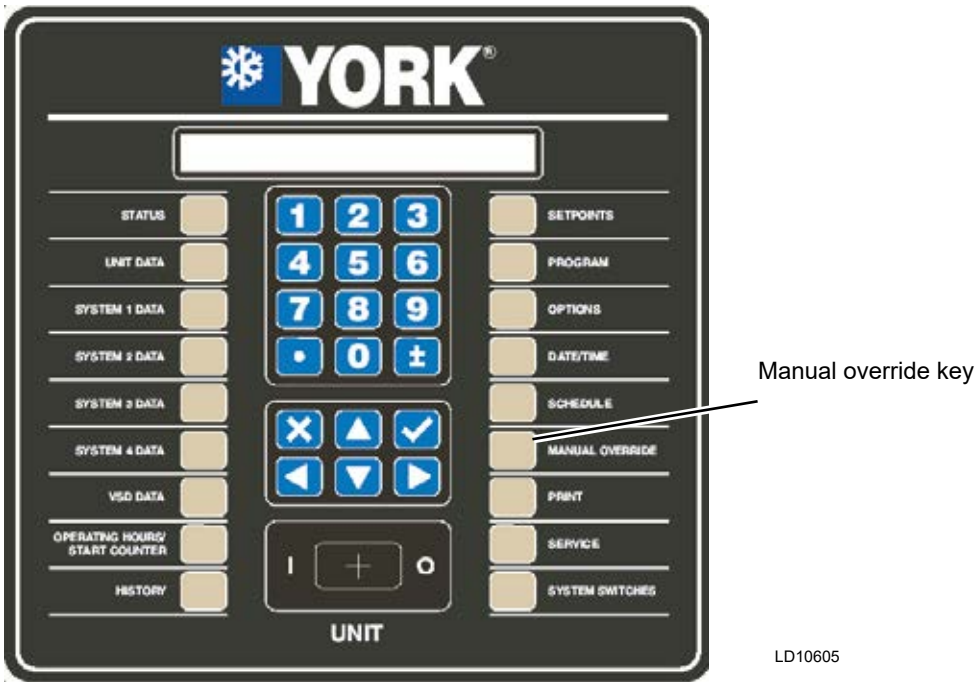

Manual override key operation

If the MANUAL OVERRIDE key is pressed during a schedule shutdown, the STATUS display will display the message below. This indicates that the Daily Schedule is being ignored and the chiller will start when chilled liquid temperature allows, Remote Contacts, UNIT switch and SYSTEM switches permitting. This is a priority message and cannot be overridden by anti-recycle messages, fault messages, and so on, when in the STATUS display mode. Therefore, do not expect to see any other STATUS messages when in the MANUAL OVERRIDE mode. MANUAL OVERRIDE is to only be used in emergencies or for servicing. Manual override mode automatically disables itself after 30 minutes.

MANUAL OVERRIDE

© 2025 Johnson Controls. All rights reserved.

Print key

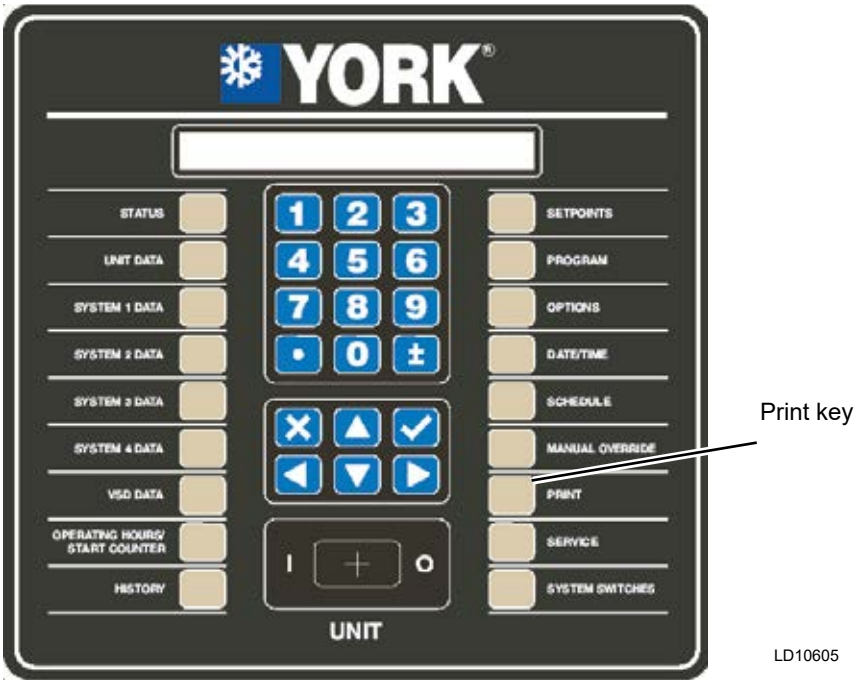

Print key operation

The PRINT key is used to initiate a printout of current operating data (real time data), a complete history printout of all history (fault) buffers, a printout of all normal shutdowns (compressor cycling, chiller shutdown, and so on), or history (fault) data printout of a specific fault. History Buffer 1 will always be the most recent fault history printout. Printing may also be canceled by selecting the CANCEL PRINTING option. The following message is displayed when the PRINT key is pressed.

```
PRINT  CHOOSE  PRINT  REPORT
◄ ►    XXXXXXXXXXXXXXXXXXXXX
```

After pressing the PRINT key, the printout type is selected by pressing the ◄ (LEFT ARROW) or ► (RIGHT ARROW) keys until the desired printout is displayed.

The following table shows the available printout types.

Table 25 - Printout types

Printout types
Operating Data (Default Selection)
All History Buffers
Normal Shutdowns
History Buffer 1
History Buffer 2
History Buffer 3
History Buffer 4
History Buffer 5
History Buffer 6
History Buffer 7
History Buffer 8
History Buffer 9
History Buffer 10
Cancel Printing

The specific printout is initiated by pressing the ✓ (ENTER) key.

© 2025 Johnson Controls. All rights reserved.

A sample of the Operating Data Printout is included. The operating data printout is a snapshot of current system operating conditions when the printout was selected. The sample shows combined printouts of 2, 3, and 4 circuit units. The actual printout will only show data for the appropriate chiller type.

NOTE

Bold italic text below a line of print is not on the actual printout. Bold italic text indicates information that may not be available on all printouts or is additional information to help explain the difference in a 2/3 or 4 circuit printout.

Operating data printout

```
     JOHNSON CONTROLS INTERNATIONAL
              CORPORATION
           YVAA SCREW CHILLER
             OPERATING DATA
         2:04:14 PM  30 DEC 11
SYS 1
NOT RUNNING
SYS 2
COMPRESSOR RUNNING
                OPTIONS
CHILLED LIQUID                      WATER
LOCAL/REMOTE MODE                  REMOTE
LEAD/LAG CONTROL                AUTOMATIC
REMOTE TEMP RESET               DISABLED
REMOTE CURRENT LIMIT           0 TO 10 V
REMOTE SOUND LIMIT            4 TO 20 MA
(if Sound Limiting enabled)
LOW AMBIENT CUTOUT               ENABLED
             PROGRAM VALUES
SUCT PRESS CUTOUT                 44 PSIG
LOW AMBIENT CUTOUT              25.0 DEGF
LEAVING LIQUID CUTOUT           36.0 DEGF
MOTOR CURRENT LIMIT              100 %FLA
PULLDOWN CURRENT LIMIT           100 %FLA
PULLDOWN LIMIT TIME                0 MIN
SUBCOOLING SETPOINT             12.0 DEGF
UNIT ID NUMBER                         0
SOUND LIMIT SETPOINT          100%
(if Sound Limiting enabled)
               UNIT DATA
LEAVING LIQUID TEMP             49.0 DEGF
RETURN LIQUID TEMP              58.2 DEGF
TEMP RATE                  XXX.X DEGF/MIN
COOLING RANGE             42.0+/-2.0 DEGF
REMOTE SETPOINT                 44.0 DEGF
AMBIENT AIR TEMP                74.8 DEGF
LEAD SYSTEM                       SYS 2
FLOW SWITCH                          ON
EVAPORATOR PUMP RUN                  ON
EVAPORATOR HEATER                   OFF
ACTIVE REMOTE CONTROL              NONE
OPERATING HOURS 1=XXXXX,         2=XXXXX
START COUNTER 1=XXXXX,           2=XXXXX
SOFTWARE VERSION             C.ACS.XX.00
                VSD DATA
ACTUAL FREQUENCY                XXX.X HZ
COMMAND FREQUENCY               XXX.X HZ
DC BUS VOLTAGE                   XXX VDC
INTERNAL AMBIENT TEMP         XXX.X DEGF
COOLING SYSTEM STATUS                XXX
BASEPLATE TEMPS             XXX XXX DEGF
PRECHARGE SIGNAL                     XXX
MOTOR OVERLOADS 1/2         XXX XXX AMPS
SOFTWARE VERSION             C.VSD.XX.00
UNIT SERIAL NUMBER           YYYY XXXZZZ
             SYSTEM 1 DATA
COMPRESSOR STATUS                    OFF
RUN TIME              0- 0- 0- 0 D-H-M-S
MOTOR CURRENT           0AMPS     0 %FLA
SUCTION PRESSURE                125 PSIG
DISCHARGE PRESSURE              131 PSIG
OIL PRESSURE                    130 PSIG
CONDENSER LIQUID TEMP           68.4 DEGF
DISCHARGE TEMPERATURE           68.8 DEGF
SAT SUCTION TEMP                71.8 DEGF
SUBCOOLING                       3.4 DEGF
SAT DISCHARGE TEMP              74.5 DEGF
DISCHARGE SUPERHEAT              6.3 DEGF
MOTOR TMP            XXX.XXXX.XXXX.XDEGF
COMPRESSOR SPEED                XXX.X %
FLASH TANK LEVEL               > 512 ADC
COND DRAIN % OPEN               XXX.X %
```


© 2025 Johnson Controls. All rights reserved.

```
ECONOMIZER % OPEN                XXX.X %
CONDENSER FANS ON                     0
CONDENSER FAN SPEED          XXX % (vsd)
COMPRESSOR HEATER                    ON
VI STEP SOLENOID 1                  OFF
VI STEP SOLENOID 2                  OFF
RUN PERMISSIVE                       ON
VSD RUN RELAY                       OFF
VSD SOFTWARE RUN SIGNAL             OFF
             SYSTEM 2 DATA
COMPRESSOR STATUS                    ON
RUN TIME               0-0-15-26 D-H-M-S
MOTOR CURRENT          104 AMPS  87 %FLA
SUCTION PRESSURE                 57 PSIG
DISCHARGE PRESSURE              233 PSIG
OIL PRESSURE                    218 PSIG
CONDENSER LIQUID TEMP          42.9 DEGF
DISCHARGE TEMPERATURE         145.5 DEGF
SAT CONDENSER TEMP             31.7 DEGF
SUBCOOLING                     11.2 DEGF
SAT DISCHARGE TEMP            112.1 DEGF
DISCHARGE SUPERHEAT            33.4 DEGF
MOTOR TMP         XXX.X XXX.X XXX.X DEGF
COMPRESSOR SPEED                 XXX.X%
FLASH TANK LEVEL               < 512 ADC
COND DRAIN % OPEN                XXX.X%
ECONOMIZER % OPEN                XXX.X%
CONDENSER FANS ON                     3
CONDENSER FAN SPEED           XXX% (vsd)
COMPRESSOR HEATER                   OFF
VI STEP SOLENOID 1                  OFF
VI STEP SOLENOID 2                  OFF
RUN PERMISSIVE                       ON
VSD RUN RELAY                       OFF
VSD SOFTWARE RUN SIGNAL             OFF
        UNIT OPERATING SCHEDULE
S  M  T  W  T  F  S            *=HOLIDAY
MON START=00:00AM           STOP=00:00AM
TUE START=00:00AM           STOP=00:00AM
WED START=00:00AM       STOP=00:00AM
THU START=00:00AM       STOP=00:00AM
```

```
FRI START=00:00AM       STOP=00:00AM
SAT START=00:00AM       STOP=00:00AM
HOL START=00:00AM       STOP=00:00AM
          SOUND LIMIT SCHEDULE
              (if enabled)
MON START=00:00AM       STOP=00:00AM
TUE START=00:00AM       STOP=00:00AM
WED START=00:00AM       STOP=00:00AM
THU START=00:00AM       STOP=00:00AM
FRI START=00:00AM       STOP=00:00AM
SAT START=00:00AM       STOP=00:00AM
HOL START=00:00AM       STOP=00:00AM
```

History data printout

History printouts, when selected, provide stored data relating to all specific system and chiller operating conditions at the time of the fault, regardless of whether a lockout occurred. History information is stored in battery-backed memory on the Chiller Control Board and is not affected by power failures or resetting of faults. Whenever a fault of any type occurs, all system operating data is stored in battery-backed memory at the instant of the fault. The history printout is similar to the operating data printout except for the change in the header information shown as follows:

```
     JOHNSON CONTROLS INTERNATIONAL
              CORPORATION
           YVAA SCREW CHILLER
            HISTORY NUMBER 1
         2:04:14 PM  30 APR 11
SYS 1 YYYYYYY
        HIGH DSCH PRESS SHUTDOWN
       STATUS AT TIME OF SHUTDOWN
SYS 1 XXXXXXXXXXXXXXXXXXXXXXXXXX
SYS 2 XXXXXXXXXXXXXXXXXXXXXXXXXX
               ALL FAULTS
XXXXXXXXXXXXXXXXXXXXXXXXXXXXXXXX
XXXXXXXXXXXXXXXXXXXXXXXXXXXXXXXX
```

The most recent fault will always be stored as HISTORY BUFFER #1.

© 2025 Johnson Controls. All rights reserved.

System switches key

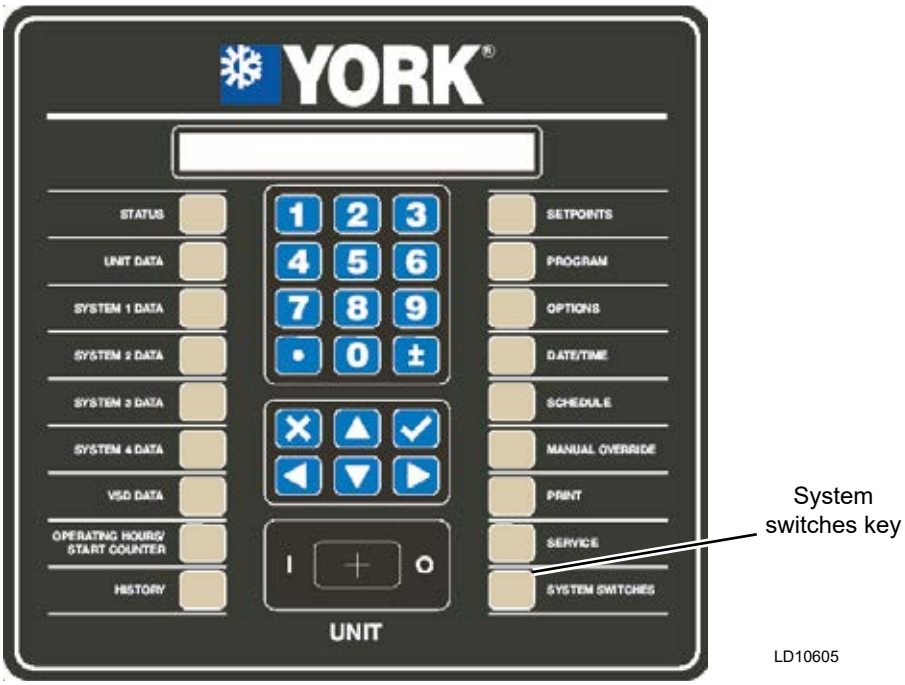

System switches key operation

The SYSTEM SWITCHES key allows the operator to turn individual systems ON and OFF. Safety lockouts are also reset by selecting the respective system switch RESET. When the SYSTEM SWITCHES key is pressed, the following message will appear:

SYSTEM SWITCHES	SYS 1 ON / OFF / RESET
◄ ►	=XXXXXXXXXXXXXXX

The display indicates the respective system and it's ON/OFF /reset switch status. The ▲▼ (ARROW) keys allow scrolling to the next and previous system switch (System 1 and 2).

SYSTEM SWITCHES	SYS 2 ON / OFF / RESET
◄ ►	=XXXXXXXXXXXXXXX

The ◄ (LEFT ARROW) or ► (RIGHT ARROW) keys allow scrolling through the choices of:

- SYSTEM OFF (default)
- SYSTEM ON
- RESET (LOCKOUT)

The switch selection is accepted into memory by pressing the ✓ (ENTER) key.

When the "RESET" selection is made and accepted, it will not change the position of the switch (either ON or OFF).

NOTE

Whenever possible, except in emergencies, always use the associated system switch to turn off a compressor, which allows the compressors to go through a controlled shutdown. Avoid using the "UNIT" switch to turn off the compressors.

© 2025 Johnson Controls. All rights reserved.

Section 9: Maintenance

General requirements

The units have been designed to operate continuously, provided they are regularly maintained and operated within the limitations given in this manual. Each unit should be included in a routine schedule of daily maintenance checks by the operator or the customer, backed up by regular service inspection and maintenance visits by a suitably qualified Service Engineer.

It is entirely the responsibility of the owner to provide for these regular maintenance requirements and to enter into a maintenance agreement with a Johnson Controls service organization to protect the operation of the unit. If damage or a system failure occurs due to incorrect maintenance during the warranty period, Johnson Controls is not liable for costs incurred to return the unit to satisfactory condition.

NOTE

This Maintenance section applies to the basic unit only and may, on individual contracts, be supplemented by additional requirements to cover any modifications or ancillary equipment as applicable.

WARNING

The "Safety" section of this manual should be read carefully before attempting any maintenance operations on the unit.

Weekly maintenance

The following maintenance checks should be carried out on a weekly basis by the operator/customer. Note that the units are not generally user serviceable and no attempt should be made to rectify faults or problems found during daily checks unless competent and equipped to do so. If in any doubt, contact your local Johnson Controls Service Agent.

Unit status

Press the 'STATUS' key on the keypad and ensure that no fault messages are displayed.

Operating conditions

Read the operating pressures and temperatures at the control panel using the display keys and check that these are within the operating limitations given in the manual.

Compressor oil level

Compressor oil level will typically run below the bottom of the sight glass. Oil levels will only be visible in the sight glass after running for periods of 15 minutes to 30 minutes at full compressor speed. Do not run with oil levels above the sight glass. Be careful when viewing the sight glass not to confuse a full sight glass with an empty sight glass.

Refrigerant charge

Ensure that there is a level of refrigerant in the evaporator sight glass while running at Full Load for 15 minutes to 30 minutes.

Adding charge to a system

A sight glass is located in the evaporator. When optimally charged after running full load, the refrigerant level should be approximately in the center of the sight glass. There should be little concern if the level is high or low in the glass, it should not affect operation.

NOTE

It is not necessary to weigh charge unless the entire charge has been lost. The ease of charging is possible since the microchannel coils hold only a small amount of refrigerant charge. A charging valve, located between the fixed orifice and the evaporator, may be used if charge adjustment is required. Charge should be added as liquid while circulating water through the evaporator. If complete charge needs to be added, see System evacuation on page 185 and Refrigerant charging on page 189 in the next section. Use the valve on the liquid line for adding the full charge and open the valves per the procedure.

© 2025 Johnson Controls. All rights reserved.

Checking system for leaks

Leak testing

The refrigerant side of the system is carefully pressure tested and evacuated at the factory.

After the system has been charged, the system must be carefully leak tested with a refrigerant-compatible leak detector to ensure that all joints are tight. The acceptable limit for a 100% pure R-134a/R-513A system is 0.1 oz/year at DWP.

If any leaks are indicated, they must be repaired immediately. At times, leaks can be stopped by ensuring that face seal nuts and flange bolts are correctly torqued. However, for any major repair, the refrigerant charge must be removed, and the system leak checked using reliable methods like a pressure test.

See *Removing the refrigerant charge for service on page 191*.

Leak testing during operation

After you charge the system, carefully leak test the system with a compatible leak detector to ensure that all joints are tight. The acceptable limit for a 100% pure R-134a/R-513A system is 0.1 oz/year at DWP.

If you find any leaks, repair them immediately. Usually, you can stop leaks by tightening the O-ring face seal (ORFS) fitting, flare nuts, or flange bolts. However, for any major repair, you need to remove the refrigerant charge.

Vapor connection locations

To correctly evacuate, leak test, and charge the YVAA system, all the vapor connections must be aligned correctly to conduct an effective system service. See *Figure 34 on page 182* for these locations.

CAUTION

Ensure that all the valves in the system incl. condenser and economizer EEVs, manual valves and ball valves are 100% open, when any procedures – leak check, evacuation or refrigerant handling service is performed on the chiller system as a whole.

Use these service valves for all vapor and charging connection processes. This includes evacuation, vacuum gauge connection, vapor, and liquid charging.

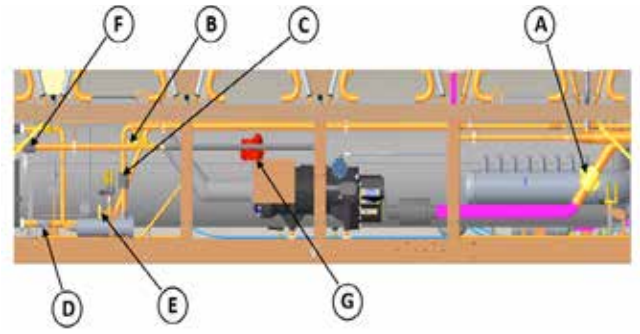

Callout	Component	Callout	Component
A	Compressor discharge line isolation ball valve	E	Evaporator liquid line service valve
B	Condenser drain liquid service valve	F	Economizer line isolation ball valve
C	Condenser drain isolation ball valve, optional	G	Suction service valve, optional
D	Flash Tank drain angle valve	-	-

Figure 34 - Service connections

System pressure test

After you remove the refrigerant charge and repair all known leaks, charge the system with a small amount of refrigerant mixed with dry nitrogen. You can then use an electronic leak detector to detect any leaks that are too small to find by the soap test.

WARNING

Care must be taken not to exceed the rated pressure of the unit refrigerant pressure relief valves.

© 2025 Johnson Controls. All rights reserved.

Conducting the gas pressure hold test

1. To monitor the system pressure over time, install a high-quality, high-resolution analog pressure gauge on one of the service valves. Use a pressure gauge that has a resolution of 2 psi increments with a dial face at 3 in. in diameter or greater.
2. Ensure all the system valves including manual valves and EEVs are 100% open. Ensure that all valves to the atmosphere are closed with flare caps in place, if applicable.
3. Before proceeding, ensure that the unit is at the initial evacuation level of 5 mmHg.

NOTE

To prevent freezing of any moisture that might be in the system, do not go below 5 mmHg. See System evacuation for more details.

4. With the system in a vacuum, slowly charge nitrogen vapor only into the system.
5. Slowly build up the system pressure with dry nitrogen to the design working pressure (DWP) as found on the chiller vessel data plates.
6. Allow the pressure to remain in the chiller based on *Figure 37 on page 183*. This figure provides the hold times for pressure hold testing based on the vessel diameter and length.

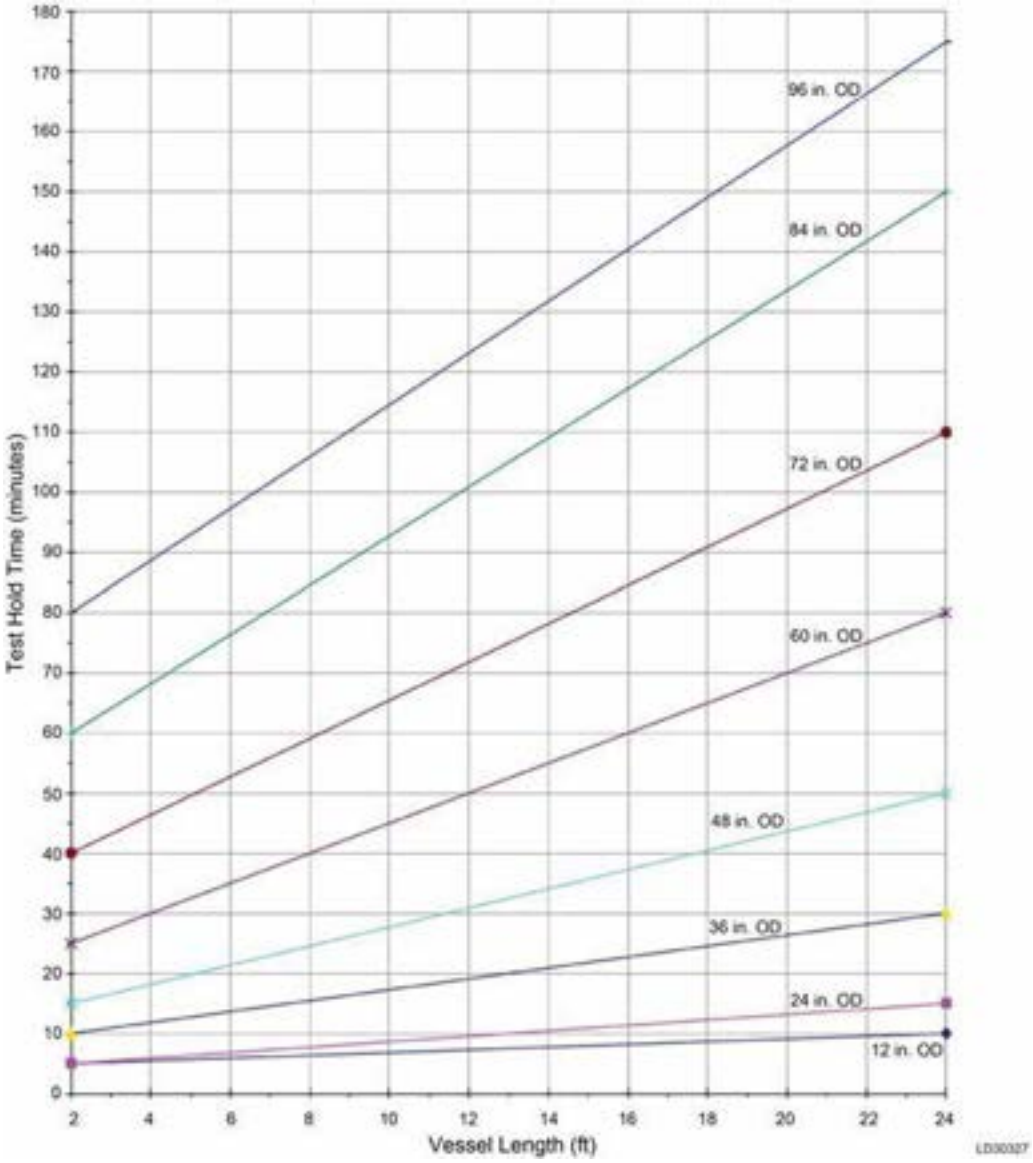

Figure 37 - Leak test hold times

© 2025 Johnson Controls. All rights reserved.

What to do next:

- For a unit with no loss of pressure, proceed to unit evacuation.
- For units where there may be a leak and there is any amount of drop in recorded pressure, proceed to either of the following leak detection methods: *Conducting the soap visual gas leak test* or *Conducting the optional trace gas leak test*.

Conducting the soap visual gas leak test

1. To monitor the system pressure over time, install a high-quality, high-resolution analog pressure gauge on one of the service valves. Use a pressure gauge that has a resolution of 2 psi increments with a dial face at 3 in. in diameter or greater.
2. Ensure all the system valves including manual valves and EEVs are 100% open. Ensure that all valves to the atmosphere are closed with flare caps in place, if applicable.
3. Before proceeding, ensure that the unit is at the initial evacuation level of 5 mmHg.

NOTE

To prevent freezing of any moisture that might be in the system, do not go below 5 mmHg. See System evacuation for more details.

4. With the system evacuated, connect the hoses to high and low side of the system and charge with dry nitrogen to 100 psig (690 kPa). Pressure can be increased up to 150 psig to detect very small leaks.
5. Mix together soap and water. This solution forms bubbles when leaking vapor passes through it.
6. Use the soap solution to test around each unit fitting joint and weld seams carefully and thoroughly.
7. To enhance the test, use an ultrasonic leak detector. These devices are reliable at finding leaks in low pressure testing where soap bubble testing may not provide results.
8. After identifying all leaks, vent the nitrogen vapor, make the necessary repairs to the chiller, and repeat the gas pressure hold test until a satisfactory hold test is achieved.

Conducting the optional trace gas leak test

1. To monitor the system pressure over time, install a high-quality, high-resolution analog pressure gauge on one of the service valves. Use a pressure gauge that has a resolution of 2 psi increments with a dial face at 3 in. in diameter or greater.
2. Ensure all the system valves including manual valves and EEVs are 100% open. Ensure that all valves to the atmosphere are closed with flare caps in place, if applicable.
3. Before proceeding, ensure that the unit is at the initial evacuation level of 5 mmHg.

NOTE

To prevent freezing of any moisture that might be in the system, do not go below 5 mmHg. See System evacuation for more details.

4. With the system evacuated, charge with a vapor only for a 10% trace gas, R-134a/R-513A based on nameplate, into the chiller until the system pressure reaches 10 psig (69 kPa).
   - When using a refrigerant-based trace gas, you must always charge with vapor only to reach the initial 10 psig.
   - The use of trace gas must adhere to local policies in regard to venting or recovery of the gas. This is dependent on the gas that is selected.

NOTE

Use a suitable gas detection device that can detect the trace gas that is selected.

   - Set the gas detection limit for 10% R-134a/R-513A based trace gas, as required, to 0.078 oz/year.
5. Connect hoses to the high and low side of the system and add dry nitrogen into the chiller until the pressure reaches 100 psig (690 kPa). You can increase pressure up to 150 psig to detect very small leaks.
6. To ensure that the concentration of trace gas has reached all parts of the system, complete the following steps:
   a. Slightly open the condenser service valve on the liquid line to vent.

© 2025 Johnson Controls. All rights reserved.

b. Test for the presence of the trace gas with a leak detector.

c. Continue to vent in this manner until the trace gas is detected.

7. Before beginning the trace gas testing, ensure to adequately vent any vented gas from the chiller area so that there are no false positive indications. It might be necessary to reset the test probe in an outside space.

8. Test around each joint and factory weld carefully and thoroughly.

9. To check for tube or tube joint leaks, complete the following steps:

   a. Isolate and drain the evaporator waterboxes.

   b. Purge the waterboxes and tubes with dry nitrogen through the vents or drains until the detector does not indicate any evidence of refrigerant.

   c. Close the vents and drains. Wait 1 hr.

   d. Open a drain and insert the leak detector.

10. If a tube leak is suspected, complete the following steps:

    a. Remove the waterboxes to facilitate application of the soap solution to the tubesheets.

    b. To test for tube wall leaks, insert a rubber cork in both ends of each tube, and leave pressurized for at least 12 hr.

    c. If a leak is present, the pressure pushes the cork out of the tube. If this occurs, plug the tube or explore other options.

    d. If a tube or tubesheet leak is confirmed, contact product technical support (PTS) for guidance on repair procedures.

11. After identifying all leaks, recover the test gas as applicable, make the necessary repairs, repeat the leak tests, evacuate the chiller, and perform the time-based pressure hold test.

System evacuation

WARNING

Ensure that power is removed from the input side of the variable speed drive at all times when the chiller is under vacuum (less than atmospheric pressure). The variable speed drive maintains voltage to ground on the motor when the chiller is off while voltage is available to the variable speed drive. Insulating properties in the motor are reduced in vacuum and may not insulate this voltage sufficiently.

Vacuum dehydration

Before you perform the final evacuation and system charging, it is necessary to obtain a sufficiently dry system. Use the following instructions as an effective method for evacuating and dehydrating a system in the field. Although there are several methods of dehydrating a system, the following method produces one of the best results and provides accurate readings of the extent of dehydration. The equipment required for this method of dehydration includes the following items:

- High-resolution vacuum gauge, microns below 500
- A chart that shows the relationship between dew point temperature and pressure in microns, vacuum. See *Table 27 on page 189*.
- Vacuum pump that can pump a suitable vacuum on the system

Follow the dehydration steps as closely as possible to prevent moisture from becoming trapped in the system. If you apply too deep of a vacuum, any trapped moisture might freeze and not be exhausted as vapor.

Failure to remove all of the moisture can create acids in the refrigerant circuit. These acids can damage internal system components over time and cause premature failure of items such as the compressor, motor, and any other devices sensitive to acid contact.

© 2025 Johnson Controls. All rights reserved.

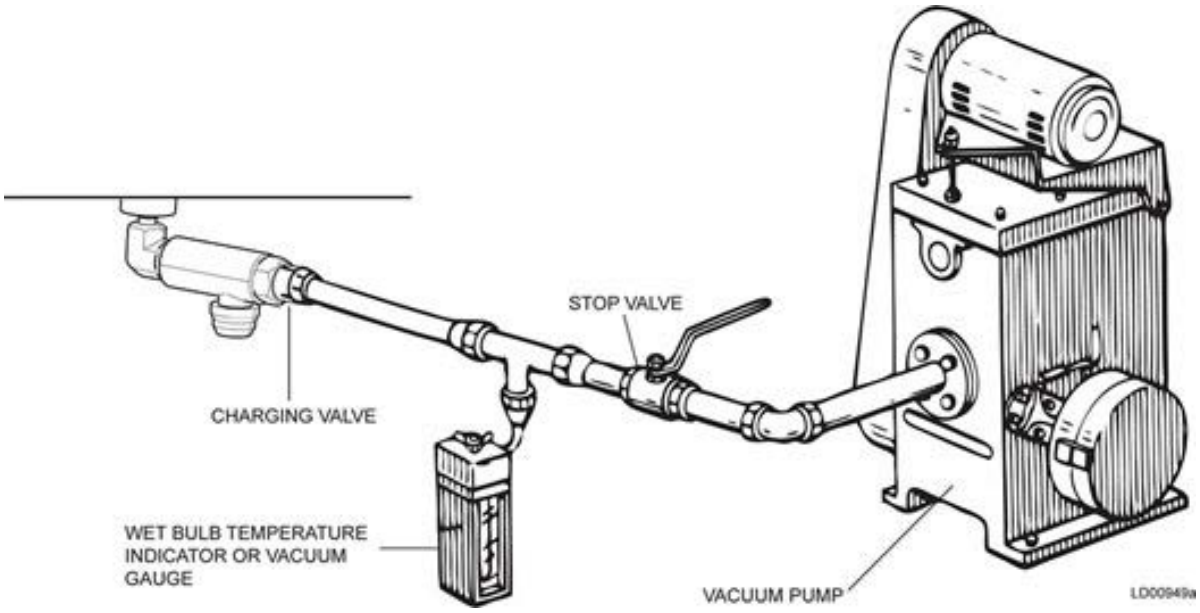

Figure 35 - Evacuation of chiller operation

Table 26 - System pressures

Gauge	Absolute			Boiling temperatures of water, °F
Inches of mercury (Hg) below one standard atmosphere	psia	Millimeters of mercury (Hg)	Microns	
0 in.	14.6960	760.00	760,000	212
10.240 in.	9.6290	500.00	500,000	192
22.050 in.	3.8650	200.00	200,000	151
25.980 in.	1.9350	100.00	100,000	124
27.950 in.	0.9680	50.00	50,000	101
28.940 in.	0.4810	25.00	25,000	78
29.530 in.	0.1920	10.00	10,000	52
29.670 in.	0.1220	6.30	6,300	40
29.720 in.	0.0990	5.00	5,000	35
29.842 in.	0.0390	2.00	2,000	15
29.882 in.	0.0190	1.00	1,000	1
29.901 in.	0.0100	0.50	500	–11
29.917 in.	0.0020	0.10	100	–38
29.919 in.	0.0010	0.05	50	–50
29.9206 in.	0.0002	0.01	10	–70
29.921 in.	0	0	0	-

Notes:

- One standard atmosphere = 14.696 psia = 760 mm Hg absolute pressure at 32°F = 29.921 in. Hg absolute at 32°F
- psig = pound per square inch gauge pressure = pressure above atmosphere
- psia = pound per square inch absolute pressure = sum of gauge plus atmospheric pressure
- Shell volume = L*π * r2= (Length in feet)*(3.1416)*(radius squared) = cubic feet. To keep the units consistent, round the length and radius to the nearest tenth of a foot.
- µm = Micron

© 2025 Johnson Controls. All rights reserved.

Dehydration

To ensure that there is confidence in the vacuum decay related to moisture boiling off, only perform the dehydration process after you thoroughly leak check the system. The dehydration process is only needed if the following occurs:

1. The nitrogen holding charge on shipments has been lost.
2. The system has been open to the atmosphere for any length of time.
3. Tube leaks have introduced moisture to the refrigerant circuit.
4. Indications of moisture contamination have appeared in any of the sight glasses

You can use the evacuation method for dehydration of a refrigerant system because the water present in the system reacts much like a refrigerant does. However, the vacuum pressure in the system cannot always be pulled down to a point where its saturation temperature is considerably below that of the equipment room temperature due to low ambient room conditions and other factors. As a result, you might need to use an external heat source or flow warm water through at least one vessel to raise the vessel internal temperature. This ensures that heat flows into the system and helps to vaporize the water, so that a large percentage of it can be removed by the vacuum pump.

The length of time necessary for the dehydration of a system depends on the size or volume of the system, the temperature of the vessels, the capacity and efficiency of the vacuum pump, the room temperature, and the quantity of water present in the system. You can use an external heat source to shorten the dehydration time, as discussed in the previous paragraph. If you use a vacuum gauge as suggested, you can use the corresponding saturation temperature as a reference. If you pressure test the system before evacuation and it is tight, then the saturation temperature recordings follows a curve similar to the typical saturation curve in *Figure 36 on page 187*.

The temperature of any trapped water in the chiller drops as the pressure decreases, until it reaches boiling point. At this point, the temperature levels off and remains at this level until all of the water in the shell has vaporized. After this final vaporization, the pressure and temperature continue to drop until eventually reaching a temperature of 35°F (1.6°C) or a pressure of 5,000 µm. Because vacuum pumps have the capacity to overcome the boiling rate of the trapped moisture, do not go below this pressure at this point.

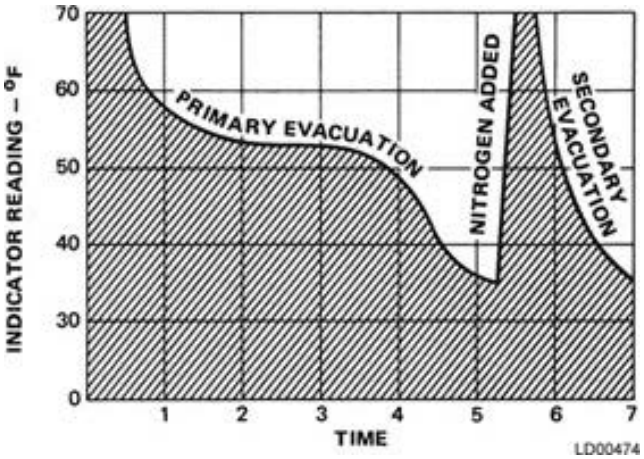

Figure 36 - Saturation curve

After the system reaches this point, practically all of the air has been evacuated from the system, but a small amount of moisture still remains. In order to provide a medium for carrying this residual moisture to the vacuum pump, nitrogen must be introduced into the system to bring it to atmospheric pressure and the indicator temperature returns to approximately ambient temperature. Close off the system again, and start the second evacuation. The relatively small amount of moisture left moves out through the vacuum pump and the temperature or pressure shown by the indicator drops uniformly until it reaches a temperature of 35°F (1.6°C) or a pressure of 5,000 µm.

When the vacuum indicator registers this temperature or pressure, it is a positive sign that the system is dehydrated to the appropriate limit. If the indicator does not reach this level, it indicates that there is a leak somewhere in the system. You must correct any leaks before you can evacuate the system to 35°F (1.6°C) or 5,000 µm. During the primary or dehydration evacuation, closely monitor the vacuum level. Do not let it fall below 5,000 µm or the equivalent 35°F (1.6°C).

If the pressure temperature relationship falls to 32°F (0°C), the water in the system freezes, and the result is a faulty pressure reading. Use the following procedure as a guide to the steps for dehydration.

© 2025 Johnson Controls. All rights reserved.

Conducting the dehydration process

1. Connect a high-capacity vacuum pump with indicator, to the charging valves as shown in *Figure 34 on page 182* and start the pump.
2. Ensure all the system valves, including manual valves and EEVs, are 100% open. Ensure that all valves to the atmosphere are closed with flare caps in place, if applicable.
3. Operate the vacuum pump until it reaches a pressure of 5,000 µm. To avoid freezing any trapped moisture in the system, see *Table 27 on page 189* for the corresponding pressure and temperature values.
4. To start the 8-hr vacuum hold test, close the system charging valve connection to the vacuum pump. Note the time and pressure.
5. Hold the vacuum obtained in Step 4 in the system for 8 h. Even a slight rise in pressure can indicate a leak, the presence of moisture, or both. It is important to check for pressure change with the chiller at the same temperature. Pressure changes proportional to temperature and can affect results.
6. To determine if it is moisture or a leak, conduct a pressure rise test. Evacuate the system to 5,000 µm again and perform another hold test:
   - If the pressure rise goes to 0 psig, it indicates that a leak is present.
   - During the hold period, if moisture is present, the pressure stabilizes at some level below atmosphere and should correspond to the room ambient temperature or the heat being applied to the vessel. See *Table 27 on page 189* for values.
7. An acceptable vacuum pressure rise is 150 µm for the first 60 min.
8. If the vacuum does not hold for within the limits defined in Step 6, you must find and repair the leak. If you cannot identify the leaks while pressurized but the vacuum hold tests indicate that there is a leak, in most cases this can be traced to an elastomeric or O-ring sealing issue.

When the 5,000 µm vacuum hold test is successful, you can perform a final evacuation.

Conducting the final evacuation

After the pressure test and vessel dehydration have been completed, conduct the final evacuation as follows:

1. Connect a high capacity vacuum pump with indicator, to the system charging valve as shown in *Figure 34 on page 182*.
2. Ensure all the system valves including manual valves and EEVs are 100% open. Ensure that all valves to the atmosphere are closed with flare caps in place, if applicable.
3. Operate the vacuum pump to evacuate the system to the best attainable vacuum. The vacuum must be less than 500 µm, but if that is not possible, a vacuum at 1000 µm or lower is acceptable.
4. To start the 8-h vacuum hold test, close the system charging valve connection to the vacuum pump. Note the time and pressure.
5. Hold the vacuum obtained in Step 4 in the system for 8 h. Any rise that exceeds the limits in Step 7 can indicate a leak, the presence of moisture, or both. It is important to check for pressure change with the chiller at the same temperature. Pressure changes proportional to temperature and affects results.
6. To determine if it is moisture or a leak, conduct a pressure rise test. Evacuate the system to 5,000 µm again and perform another hold test.
   - If the pressure rise goes to 0 psig, it indicates that a leak is present.
   - During the hold period, if moisture is present, the pressure stabilizes at some level below atmosphere and should correspond to the room ambient temperature or the heat being applied to the vessel. See *Table 27 on page 189* for values.
7. An acceptable vacuum pressure rise is 150 µm in 60 min.
8. If the vacuum does not hold within the limits defined in Step 7, you must find and repair the leak. If you cannot identify the leaks while pressurize but vacuum hold tests indicate that there is a leak, in most cases this can be traced to an elastomeric or O-ring sealing issue.

When the 500 µm hold test is successful, see *Refrigerant charging* to charge the system.

© 2025 Johnson Controls. All rights reserved.

Refrigerant charging

Before you begin, it is critical to establish that the vapor portion of the refrigerant container or cylinder has not been contaminated with other gases that are not R-134a or R-513A, including air. Use the appropriate saturation property for the correct refrigerant. See *Table 27 on page 189* and *Table 28 on page 189* for R-134a and R-513A respectively, to determine if the saturation pressure and ambient temperature of the refrigerant in the container indicates that the gas pressure matches the corresponding temperature.

To prevent liquid freezing within any of the chiller tubes when charging an evacuated system, ensure that only the refrigerant vapor from the top of the drum or cylinder is admitted to the system. Do this until the system pressure is raised above the corresponding saturation pressure at the freezing point of the chilled liquids. For all other liquids, establish the freeze point temperature and vapor charge to an appropriate pressure that is 5°F (2.78°C) higher than that freeze point. For water with R-134a at 32°F, that pressure is 28 psig. See *Table 27 on page 189* and *Table 28 on page 189*.

Table 27 - R-134a pressure to saturated temperature conversion

Pressure psig (bar)	Dew point temperature ºF (ºC)	Pressure psig (bar)	Dew point temperature ºF (ºC)	Pressure psig (bar)	Dew point temperature ºF (ºC)
0.0 (0.0)	-14.9 (-26.1)	135.0 (9.31)	105.0 (40.6)	270.0 (18.62)	152.0 (66.7)
5.0 (0.34)	-3.0 (-19.4)	140.0 (9.65)	107.2 (41.8)	275.0 (18.96)	153.4 (67.4)
10.0 (0.69)	6.7 (-14.1)	145.0 (10.0)	109.4 (43.0)	280.0 (19.31)	154.7 (68.2)
15.0 (1.03)	14.9 (-9.5)	150.0 (10.34)	111.5 (44.2)	285.0 (19.65)	156.1 (68.9)
20.0 (1.38)	22.2 (-5.4)	155.0 (10.69)	113.6 (45.3)	290.0 (19.99)	157.4 (69.7)
25.0 (1.72)	28.7 (-1.8)	160.0 (11.03)	115.6 (46.4)	295.0 (20.34)	158.7 (70.4)
30.0 (2.07)	34.6 (1.4)	165.0 (11.38)	117.6 (47.6)	300.0 (20.68)	160.0 (71.1)
35.0 (2.41)	40.0 (4.4)	170.0 (11.72)	119.6 (48.7)	305.0 (21.03)	161.3 (71.8)
40.0 (2.76)	45.0 (7.2)	175.0 (12.07)	121.5 (49.7)	310.0 (21.37)	162.5 (72.5)
45.0 (3.10)	49.6 (9.8)	180.0 (12.41)	123.3 (50.7)	315.0 (21.72)	163.8 (73.2)
50.0 (3.45)	54.0 (12.2)	185.0 (12.76)	125.2 (51.8)	320.0 (22.06)	165.0 (73.9)
55.0 (3.79)	58.1 (14.5)	190.0 (13.10)	126.9 (52.7)	325.0 (22.41)	166.2 (74.6)
60.0 (4.14)	62.0 (16.7)	195.0 (13.44)	128.7 (53.7)	330.0 (22.75)	167.4 (75.2)
65.0 (4.48)	65.7 (18.7)	200.0 (13.79)	130.4 (54.7)	335.0 (23.10)	168.6 (75.9)
70.0 (4.83)	69.2 (20.7)	205.0 (14.13)	132.1 (55.6)	340.0 (23.44)	169.8 (76.6)
75.0 (5.17)	72.6 (22.6)	210.0 (14.48)	133.8 (56.6)	345.0 (23.79)	171.0 (77.2)
80.0 (5.52)	75.9 (24.4)	215.0 (14.82)	135.5 (57.5)	350.0 (24.13)	172.1 (77.8)
85.0 (5.86)	79.0 (26.1)	220.0 (15.17)	137.1 (58.4)	355.0 (24.48)	173.3 (78.5)
90.0 (6.21)	82.0 (27.8)	225.0 (15.51)	138.7 (59.3)	360.0 (24.82)	174.4 (79.1)
95.0 (6.55)	84.9 (29.4)	230.0 (15.86)	140.2 (60.1)	365.0 (25.17)	175.5 (79.7)
100.0 (6.89)	87.7 (30.9)	235.0 (16.20)	141.8 (61.0)	370.0 (25.51)	176.6 (80.3)
105.0 (7.24)	90.4 (32.4)	240.0 (16.55)	143.3 (61.8)	375.0 (25.86)	177.7 (80.9)
110.0 (7.58)	93.0 (33.9)	245.0 (16.89)	144.8 (62.3)	380.0 (26.20)	178.8 (81.6)
115.0 (7.93)	95.5 (35.3)	250.0 (17.24)	146.3 (63.5)	385.0 (26.54)	179.9 (82.2)
120.0 (8.27)	98.0 (36.7)	255.0 (17.58)	147.7 (64.3)	390.0 (26.89)	180.9 (82.7)
125.0 (8.62)	100.4 (38.0)	260.0 (17.93)	149.2 (65.1)	395.0 (27.23)	182.0 (83.3)
130.0 (8.96)	102.7 (39.3)	265.0 (18.27)	150.6 (65.9)	400.0 (27.58)	183.0 (83.9)

Table 28 - R-513A pressure to saturated temperature conversion

© 2025 Johnson Controls. All rights reserved.

Pressure psig (bar)	Average temperature ºF (ºC)	Pressure psig (bar)	Average temperature ºF (ºC)	Pressure psig (bar)	Average temperature ºF (ºC)	Pressure psig (bar)	Average temperature ºF (ºC)
0.0 (0.0)	-20.5 (-29.1)	130 (8.96)	99.3 (37.4)	260 (17.93)	146.7 (63.8)	390 (26.89)	179.1 (81.7)
5.0 (0.34)	-8.4 (-22.4)	135 (9.31)	101.6 (38.7)	265 (18.27)	148.1 (64.5)	395 (27.23)	180.2 (82.3)
10.0 (0.69)	1.4 (-17.0)	140 (9.65)	103.9 (39.9)	270 (18.62)	149.6 (65.3)	400 (27.58)	181.2 (82.9)
15.0 (1.03)	9.8 (-12.3)	145 (10.0)	106.1 (41.2)	275 (18.96)	151.0 (66.1)	405 (27.92)	182.3 (83.5)
20.0 (1.38)	17.2 (-8.2)	150 (10.34)	108.3 (42.4)	280 (19.31)	152.4 (66.9)	410 (28.27)	183.3 (84.1)
25.0 (1.72)	23.8 (-4.5)	155 (10.69)	110.4 (43.5)	285 (19.65)	153.7 (67.6)	415 (28.61)	184.3 (84.6)
30.0 (2.07)	29.8 (-1.2)	160 (11.03)	112.4 (44.7)	290 (19.99)	155.1 (68.4)	420 (28.96)	185.4 (85.2)
35.0 (2.41)	35.3 (1.8)	165 (11.38)	114.5 (45.8)	295 (20.34)	156.4 (69.1)	425 (29.30)	186.4 (85.8)
40.0 (2.76)	40.4 (4.6)	170 (11.72)	116.4 (46.9)	300 (20.68)	157.7 (69.8)	430 (29.65)	187.4 (86.3)
45.0 (3.10)	45.1 (7.3)	175 (12.07)	118.4 (48.0)	305 (21.03)	159.0 (70.6)	435 (29.99)	188.4 (86.9)
50.0 (3.45)	49.5 (9.7)	180 (12.41)	120.3 (49.1)	310 (21.37)	160.3 (71.3)	440 (30.34)	189.4 (87.4)
55.0 (3.79)	53.7 (12.1)	185 (12.76)	122.2 (50.1)	315 (21.72)	161.6 (72.0)	445 (30.68)	190.3 (87.4)
60.0 (4.14)	57.7 (14.2)	190 (13.10)	124.0 (51.1)	320 (22.06)	162.9 (72.7)	450 (31.03)	191.3 (88.5)
65.0 (4.48)	61.5 (16.4)	195 (13.44)	125.8 (52.1)	325 (22.41)	164.1 (73.4)	455 (31.37)	192.2 (89.0)
70.0 (4.83)	65.1 (18.4)	200 (13.79)	127.6 (53.1)	330 (22.75)	165.3 (74.1)	460 (31.72)	193.2 (89.6)
75.0 (5.17)	68.5 (20.3)	205 (14.13)	129.3 (54.1)	335 (23.10)	166.6 (74.8)	465 (32.06)	194.1 (90.1)
80.0 (5.52)	71.9 (21.2)	210 (14.48)	131.0 (55.0)	340 (23.44)	167.8 (75.4)	470 (32.41)	195.1 (90.6)
85.0 (5.86)	75.0 (23.9)	215 (14.82)	132.7 (55.9)	345 (23.79)	168.9 (76.1)	475 (32.75)	196.0 (91.1)
90.0 (6.21)	78.1 (25.6)	220 (15.17)	134.3 (56.8)	350 (24.13)	170.1 (76.7)	480 (33.09)	196.9 (91.6)
95.0 (6.55)	81.0 (27.2)	225 (15.51)	136.0 (57.8)	355 (24.48)	171.3 (77.4)	485 (33.44)	197.8 (92.1)
100.0 (6.89)	83.9 (28.8)	230 (15.86)	137.6 (58.7)	360 (24.82)	172.4 (78.0)	490 (33.78)	198.7 (92.6)
105.0 (7.24)	86.6 (30.3)	235 (16.20)	139.1 (59.5)	365 (25.17)	173.6 (78.7)	495 (34.13)	199.6 (93.1)
110.0 (7.58)	89.3 (31.8)	240 (16.55)	140.7 (60.4)	370 (25.51)	174.7 (79.3)	500 (34.47)	200.4 (93.6)
115.0 (7.93)	91.9 (33.3)	245 (16.89)	142.2 (61.2)	375 (25.86)	175.8 (79.9)	505 (34.82)	201.3 (94.1)
120.0 (8.27)	94.4 (34.7)	250 (17.24)	143.7 (62.1)	380 (26.20)	176.9 (80.5)	-	-
125.0 (8.62)	96.9 (36.5)	255 (17.58)	145.2 (62.9)	385 (26.54)	178.0 (81.1)	-	-

Before charging, establish the starting weight for the refrigerant cylinder. When you charge the chiller to the appropriate saturation pressure, you might need to use a refrigerant pump to draw vapor from the chiller and discharge it to the vapor connection of the refrigerant cylinder. This helps to create a pressure differential for pushing the refrigerant liquid from the cylinder to the chiller.

While charging, take every precaution to prevent air from entering the system. Create a suitable charging connection from new copper tubing or correctly selected flexible charging hoses. Fit this charging connection between the system charging valve and the fitting on the charging drum.

Ensure this connection is as short as possible but long enough to provide sufficient flexibility for changing drums. It must also contain a tee fitting with a valve that can serve as a connection point to a vacuum pump to evacuate the charging lines.

You must evacuate the charging connection each time the lines are disconnected for changing cylinders or any of the components of the charging process.

The charging line must also contain a sight glass. When liquid charging is performed, monitor the sight glass to determine when the liquid is no longer being transferred to the chiller.

The refrigerant charge is specified for each chiller model on the unit data plate or in the factory order form (FOF) that is provided for every new sale. Charge the chiller based on the amount specified in the FOF less 10%. For example, for a chiller that requires 500# of refrigerant, the initial refrigerant charge is 450#, 500

© 2025 Johnson Controls. All rights reserved.

- 50 = 450. This allows room to trim the charge as outlined in *Checking and trimming the refrigerant charge*.

Charge the refrigerant in accordance with the method shown in this section. Record the weight of the refrigerant charged after the initial charging. See *Removing the refrigerant charge for service* for trimming the chiller for optimum operation based on the defined indicators, such as discharge superheat, sub-cooling, and approaches.

Removing the refrigerant charge for service

WARNING

To avoid the possibility of freezing liquid within any the chiller tubes when removing refrigerant from a charged system, the required method is to run the chilled water pumps during this process to eliminate the risk of tube freezing during the recovery process. The chilled liquid flow must remain present for the entire refrigerant recovery process. If water flow cannot be maintained, it is imperative that the chilled liquid be completely drained from the chiller and the waterbox vents and drains are all open before beginning this process.

Before you move any charge into the containers, for optimal performance, use an empty, fully evacuated refrigerant container. This ensures that the container is not contaminated and aids in the efficient removal of refrigerant.

Before you remove any refrigerant, establish the starting weight (tare weight) for the refrigerant cylinder and log the final weight for each container that is used for the recovery. This ensures that the correct weights are noted for determining the chiller refrigerant charge amount.

```
Refrigerant weight = Total Container
Weight – Tare Weight
```

While handling refrigerant into or out of any chiller, take every precaution to prevent air from entering the system when handling the charging lines. Create a suitable charging connection from new copper tubing or correctly selected flexible charging hoses. Fit this charging connection between the system service or charging valves and the fitting on the refrigerant container. Ensure this connection is as short as possible but long enough to provide sufficient flexibility for changing containers. It must also contain a tee fitting with a valve that can serve as a connection point to a vacuum pump to evacuate the charging lines.

You must evacuate the charging connection each time the lines are disconnected for changing cylinders or any of the components of the charging process. The charging line for the refrigerant liquid must also contain a sight glass. When liquid refrigerant is being handled, monitor the sight glass to determine when the liquid is no longer being transferred to or from the chiller.

To remove refrigerant from the evaporator, complete the following steps:

1. Turn the chilled liquid pump **ON** and ensure the flow is above the minimum recommended flow.
2. Ensure all the system valves including manual valves and EEVs are 100% open.
3. Connect the recovery unit and a manifold gauge to the liquid line feeding the eductor. There may be a valve in the line or a Schrader fitting on the eductor filter for this purpose.
4. Connect the recovery unit to a recovery cylinder sitting on an accurate scale. Turn the recovery unit **ON** and observe the liquid refrigerant flowing from the line into the cylinder. The flow of liquid should be obvious.
5. Monitor the pressure gauge to ensure that the pressure does not drop below the freeze point of the chilled liquid. Throttle the flow as needed with the manifold gauge valves to prevent pressures from dropping below the freeze point.
6. Continue to remove the liquid refrigerant while observing the flow and the pressure. Note the charge in the system based on the nameplate data to determine when the charge removal is nearly complete. Monitor the weight of the recovery cylinder to determine when the cylinder is full. Change the cylinder as needed.
7. Continue to remove refrigerant until you can no longer see liquid flowing in the manifold hoses.
8. After you remove the liquid and it is no longer visible in the hose, pump the remaining gas out with the recovery unit while the pressure drops to 0 psig (0 barg).

Checking and trimming the refrigerant charge

© 2025 Johnson Controls. All rights reserved.

NOTE

The amount of chiller refrigerant charge must be verified to meet the specified amount as found in the chiller nameplate or chiller factory order form (FOF). Reference this document or the unit Sales Order screen on the chiller control panel to determine the amount of charge required based on the chiller rating.

During operation, the refrigerant charge level is correct when the evaporator approach (STD), subcooling are at the design values for the condition. For new sales, these design values are included as part of the FOF. For units where they are not seen on the FOF, the chiller sales engineer from the chiller rating program can provide them upon request. These depend on tube selection, chilled fluid type, operating head, and operating conditions. For YVAA Chillers, a standard way to verify correct charge amount in the system is when the evaporator sight glass is half-full.

The following equations define these parameters. Condenser subcooling is calculated and the condenser drain valve is controlled to the programmed setpoint by the chiller control logic.

Equations:

- Evaporator approach = (LCHLT) - (EST)
- Discharge superheat = (DT) - (CST)
- Subcooling = (CST) - condensed refrigerant liquid temperature (from condenser outlet)

Definitions:

- EST = Evaporator Saturation temperature; calculate from saturated suction pressure on the panel.
- LCHLT = Leaving evaporator liquid temperature
- DT = Compressor Discharge Temperature; shown on the chiller panel.
- CST = Condenser Saturation Temperature; calculate from saturated condenser pressure on the panel.

You can view the parameters on the chiller control center. The chiller must be at full load design operating conditions to correctly determine the correct refrigerant charge level, when operating. When the correct condenser level is maintaining the design subcooling, the evaporator approach and discharge superheat are a function of the amount of charge that is now maintained in the evaporator. To lower the evaporator small temperature difference and compressor discharge superheat, add the refrigerant charge to the system. If additional details are necessary, contact product technical support (PTS) for guidance.

Checking the refrigerant charge during unit shutdown

Because YVAA uses a hybrid falling film technology, there is no reliable means to evaluate the refrigerant charge when the chiller is not running.

Draining the glycol liquid

1. Fully open the venting valve at the top of glycol system.
2. Connect the drainage valve to the inlet of recycle pump. The drainage valve is at the bottom of the system so that all of the glycol can empty out.
3. Start the pump to collect the glycol liquid.
4. Gradually open much more vent valves if no liquid escape through it.
5. Stop the pump and close the valve to pump inlet if the container in truck is filled.
6. Repeat step 4 to Step 6 until all of the glycol liquid drained out.
7. Shipped the drained glycol liquid to professional disposal plant or company for properly treatment.
8. Contact an appropriate waste disposal company to dispose of glycol liquid.

Glycol disposal attentions

To effectively protect the environment including soil, water, and air, glycol disposal must adhere to the national or local codes and all of the regulations on glycol disposal or chemical material disposal.

Microchannel coil cleaning

Regular cleaning is an essential part of maintaining the integrity and heat transfer properties of heat exchangers. Failure to follow cleaning guidelines can result in heat exchanger damage, including leaks or loss of performance. The cleaning procedures described in this document are required to maintain the warranty of the condenser coils.
Microchannel coils tend to accumulate less dirt inside the coils than on the surface, which makes them easier to clean than conventional round tube and fin coils.

© 2025 Johnson Controls. All rights reserved.

The reduced depth and parallel tube layout of microchannel heat exchangers minimize the restriction of cleaning water through the heat exchanger. This provides a shorter and more direct path for cleaning water to effectively carry away dirt and debris during regular maintenance. During the cleaning process, take care to avoid damage to the coils and the protective coatings. The following care points must be followed during cleaning:

- **Do not** use high pressure water, such as a pressure washer, to clean the coils. High pressure water can damage the fins and the protective coatings on the coil.
- **Do not** contact the coil with a hard object such as a hose nozzle, hard vacuum nozzle or any other tool. Hard objects or tools can cause mechanical damage to the coil material and protective coatings on the coil.
- **Do not** use caustic or acidic cleaning solutions on coils. Only use cleaning solutions approved by Johnson Controls.

The required cleaning procedure is different depending on the type of coil and protective coating supplied with the coil. This section describes the proper procedures to maintain the integrity of each type of coil.

Cleaning procedure required for standard and environment guard microchannel coils

You must clean standard and environment guard microchannel coils following this procedure at least once every 3 months to ensure that the integrity of the coils and the warranty of the coils are maintained. In environments where coils become heavily fouled or there are high levels of pollution or corrosive elements, a monthly frequency of cleaning is recommended. Refer to the Johnson Controls *Microchannel Heat Exchanger Application Guide (Form 150-12-AD1)* for further details on the classification of polluted and corrosive environments.

CAUTION

Proper care must be taken to ensure that cleaning agents and water are not sprayed directly onto electrical components and wiring in the V-panels and the chiller.

NOTE

Standard and Environment Guard coils are grey/silver color.

1. Remove surface debris such as dirt, leaves, insects, or fibers with a vacuum cleaner having a soft brush attachment. When brushing debris off the face of the coil, you can also use a soft bristle brush (not wire). Do not scrape the coil with the vacuum nozzle, air nozzle, or any other hard tool.
2. Rinse the coil with potable tap water. Use a gentle spray from a spray nozzle with a plastic end. Do not contact the coil with the hose nozzle. Rinse the coil by running water through every passage in the heat exchanger surface until it is clean.
3. Apply a coil cleaning solution approved by Johnson Controls. Johnson Controls approves the use of RectorSeal brand GulfClean™ coil cleaner, or equivalent, on microchannel coils. Coil cleaning solution is available from Johnson Controls Aftermarket Parts Centers in all global regions. Mix the correct amount of cleaner solution and water in accordance with the manufacturer's directions on the container. Use a hand-held pump sprayer to apply the mixed cleaner solution on the coils. Ensure that the entire surface of the coils is wetted with the solution.

   Allow the cleaning solution to remain on each of the coils for approximately 10 min.
4. Repeat the water rinse as described in Step 2 to remove the cleaning solution.
5. It is important to remove any excess water trapped in the coils immediately after the final water rinse. The condenser fans on the chiller can be run after the final water rinse to correctly dry the coils. Remove any excess water by blowing air through the coils with a hand-held blower or vacuum.

Cleaning procedure for environment guard premium microchannel coils

You must clean environment guard premium microchannel coils following this procedure described below at least once every 3 months to ensure that the integrity of the coils and the warranty of the coils are maintained. In environments where the coils become heavily fouled, or where there are high levels of pollution or corrosive elements, a monthly cleaning pro-

© 2025 Johnson Controls. All rights reserved.

cedure using Steps 1, 2, and 7 below is recommended, in addition to the quarterly cleaning using Steps 1 to 8. Refer to the Johnson Controls *Microchannel Heat Exchanger Application Guide (Form 150-12-AD1)* for further details on the classification of polluted and corrosive environments

CAUTION

Proper care must be taken to ensure that cleaning agents and water are not sprayed directly onto electrical components and wiring in the V-panels and the chiller.

NOTE

Environment Guard Premium coils are coated with a black epoxy coating..

1. Remove surface debris such as dirt, leaves, insects, or fibers with a vacuum cleaner having a soft brush attachment. When brushing debris off the face of the coil, you can also use a soft bristle brush (not wire). Do not scrape the coil with the vacuum nozzle, air nozzle, or any other hard tool.
2. Rinse the coil with potable tap water. Use a gentle spray from a spray nozzle with a plastic end. Do not contact the coil with the hose nozzle. Rinse the coil by running water through every passage in the heat exchanger surface until it is clean.
3. Apply a coil cleaning solution approved by Johnson Controls. Johnson Controls approves the use of RectorSeal brand GulfClean™ coil cleaner, or equivalent, on Environment Guard Premium microchannel coils only. Coil cleaning solution is available from Johnson Controls Aftermarket Parts Centers in all global regions. Mix the correct amount of cleaner solution and water in accordance with the manufacturer's directions on the container. Use a hand-held pump sprayer to apply the mixed cleaner solution on the coils. Ensure that the entire surface of the coils is wetted with the solution.

   Allow the cleaning solution to remain on each of the coils for approximately 10 mins.
4. Repeat the water rinse as described in Step 2 to remove the cleaning solution.
5. Apply a salt reducer solution approved by Johnson Controls. Johnson Controls approves the use of RectorSeal brand GulfClean™ salt reducer, or equivalent, on Environment Guard Premium microchannel coils only. Salt reducer solution is available from Johnson Controls Aftermarket Parts Centers in all global regions. Mix the correct amount of salt reducer solution and water in accordance with the manufacturer's directions on the container. Use a hand-held pump sprayer to apply the solution on the coils. Ensure that the entire surface of the coils is wetted with the solution. Allow the salt reducer solution to remain on each of the coils for approximately 10 min.

CAUTION

If glycol is installed in the evaporator, the glycol concentration must assure that the freeze point is below the lowest expected ambient temperature at the chiller location to avoid evaporator damage.

6. Repeat the water rinse as described in Step 2 to remove the salt reducer solution. Ensure that the final rinse is thorough in order to remove all cleaning solution and salt reducer solution from the coils.
7. It is important to remove any excess water trapped in the coils immediately after the final water rinse. The condenser fans on the chiller can be run after the final water rinse to correctly dry the coils. Remove any excess water by blowing air through the coils with a hand-held blower or vacuum.
8. Visually inspect the Environment Guard Premium e-coating on the microchannel coils for any damage, degradation or bare spots. If touch-up of the coating is necessary, follow the applicable steps in the following section to touch-up the e-coat after cleaning.

Steps to touch-up small sections of finned coil surface on microchannel coils

1. Use the touch-up paint to touch up small sections of the coil surface. Shake the aerosol can thoroughly until the mixing ball rattles, then continue to shake the can for 2 min.
2. Using slow dusting passes, spray the contents of the can in both horizontal and vertical patterns around 4 in. to 6 in. from the impacted section of the coil surface for an even coating.

© 2025 Johnson Controls. All rights reserved.

Steps to touch-up end (dead) tubes or condenser coil headers on microchannel coils

In cases where e-coating on the end tubes or condenser coil headers is showing signs of degradation, you must use 2-part urethane mastic for touch-up. Do not use 2-part urethane Mastic on finned coil surface.

CAUTION

Do not use 2-part Urethane Mastic on finned coil surface. Using Urethane Mastic on finned surfaces can result in blockage of fin sections which will lead to reduction in air flow across the coil.

Necessary materials:

- 2-Part urethane mastic kit (JCI P/N: 013-04188-000).
- 1 x mixing dish.
- 3 x 3 ml droppers.
- Soft bristle paint brush.

The 2-part urethane mastic kit consists of component A-urethane mastic (black component) and component B-urethane mastic activator (clear component)

To touch-up the end tubes and condenser coil headers, complete the following steps:

1. Thoroughly stir the can containing component A (Urethane Mastic). It is important to stir the urethane mastic thoroughly to ensure any settled pigment is dispersed before application.
2. Gently shake the can containing component B, the activator.
3. Mix the urethane mastic and activator in a 5:1 ratio. Using one dropper, add 5 mm of component A to the mixing dish.
4. Using the second (clean) dropper, add 1 ml of component B to the mixing dish.
5. Mix the components well and allow the solution in the dish to set for 30 min. Power mixing is preferred. If needed, make more amount of solution for application.
6. Using the paint brush, apply the touch up paint to the end tubes or coil headers as needed.

Table 29 - Cleaning materials

Part number (p/n)	Description
013-04185-000	Cleaner, coil, 4 gal- 1 gal
013-04185-001	Cleaner, coil, 1 gal
013-04186-000	Reducer, salt 4 gal - 1 gal
013-04186-001	Reducer, salt 1 gal
013-04187-000	Paint, touch-up 12 oz
013-04188-000	Mastic, 2-part urethane

Chilled liquid system maintenance

Whenever the chilled liquid system requires maintenance, adhere to and observe all precautions noted below.

Scheduled maintenance

The maintenance operations detailed in the following table should be carried out on a regular basis by a suitably qualified Service Engineer. It should be noted that the interval necessary between each ‘minor’ and ‘major’ service can vary depending on, for instance, application, site conditions and expected operating schedule. Normally a ‘minor’ service should be carried out every three to six months and a ‘major’ service once a year. It is recommended that your local Johnson Controls Service Center is contacted for recommendations for individual sites.

Thermal dispersion flow switch

Check the sensor tip for buildup regularly, because it can affect the sensitivity of the sensor.

In case of any buildup at the sensor tip, use a soft cloth to remove it. Use vinegar as the cleaning agent to remove any stubborn buildup if necessary.

Chiller/compressor operating log

A Chiller/Compressor Operating Log is supplied at the end of this section for logging compressor and chiller operating data.

© 2025 Johnson Controls. All rights reserved.

Before applying power to the chiller, ensure the chilled liquid system Is filled

CAUTION

DO NOT apply power to the chiller unless the system is filled with water or glycol. If the chiller is equipped with the -20°F option, applying power to an empty chilled liquid system will cause the evaporator immersion heaters to fail.

Removing water/glycol from the evaporator

CAUTION

If the chiller is equipped with a -20°F evaporator freeze protection option, which incorporates immersion heaters, power must be removed from the chiller before the evaporator is drained to assure the heaters are not damaged. Failure to remove power will cause the evaporator immersion heaters to fail.

Evaporator freeze damage

CAUTION

Power must remain on the chiller whenever the ambient temperature drops below 32°F with water in the evaporator to avoid evaporator damage. To avoid damage, assure the correct heater option for 0°F minimum ambient or -20°F minimum ambient temperature is installed, based on the lowest expected ambient temperature at the chiller location.

During operation, the glycol freeze point must also be below the lowest expected refrigerant temperature.

Glycol concentration

CAUTION

If glycol is installed in the evaporator, the glycol concentration must assure that the freeze point is below the lowest expected ambient temperature at the chiller location to avoid evaporator damage.

Winterization

CAUTION

If glycol is installed in the evaporator, the glycol concentration must assure that the freeze point is below the lowest expected ambient temperature at the chiller location to avoid evaporator damage.

© 2025 Johnson Controls. All rights reserved.

Maintenance requirements for YVAA chillers

Procedure	Weekly	Quarterly	Semi-annually	Annually	Every 5 years	Every ____ hours*
Check Oil Level in Oil Separator Sight Glass.	X					
Check Liquid Line Sight Glass/ Moisture Indicator.	X					
Check refrigerant level in the Evaporator Sight Glass while running full load for 10 to 15 minutes.	X					
Record System Operating Temperatures & Pressures.	X					
Check Condenser Coils for dirt or debris and clean as necessary.		X				
Check Programmable Operating Setpoints and Safety Cutouts. Ensure they are correct for the application.		X				
Check Compressor and Evaporator Heater operation.	X***	X				
Check Suction Isolation Valve operation if equipped.	X					
Check for dirt in the Panel. Check Door Gasket sealing integrity.		X				
**Leak check the Chiller.			X			
**Sample Compressor Oil, check for Acid, and replace if necessary.				X		
**Disconnect Power Source and Lock Out following lockout/tagout procedures. Check tightness of all Power Wiring connections including customer and factory wiring connections internal to the power enclosure(s), bus bar connections, compressor connections at compressors, and other power connections that are connected mechanically. Checking tightness may include visual inspections, pull/movement testing, or using a wrench to confirm torque values.				X		
Check Glycol concentration on Low Temp. or other applications where freezing may be a problem.				X		
Replace the corrosion inhibitor pucks, part number 026-37706-000, inside the Chiller VSD cabinet				X		
VSD Glycol Change.					X	
Check heat sink and cooling fan on Fan VFDs for dirt or debris and clean as necessary.			X			

* Reserved for customer use for any special site requirements.

** This procedure must be performed at the specific time by an industry certified technician who has been trained and qualified to work on this type of equipment. A record of this procedure be successfully carried out should be maintained on file by the equipment owner should proof of adequate maintenance be required at a later date for warranty purposes.

*** Chiller controller cannot detect the failure of heaters, compressor and evaporator heater need to weekly check and maintain to be normal in subfreezing region in winter. Weekly maintenance to heaters and with the chilled water pump controlled by unit controller is recommended and mandatory.

© 2025 Johnson Controls. All rights reserved.

Table 30 - Troubleshooting guide

Problem	Possible cause	Action
No display on control panel unit will not run.	Supply to the Panel is missing.	High Voltage to the Chiller is missing.
		Check 1FU, 2FU, 4FU, 5FU 17FU, or 19FU.
		Check 2T or 10T Transformer.
	Line Fuse is blown.	Check Fuses.
	Chiller Control Board is defective.	Replace Chiller Control Board.
	Display Board defective.	Replace Display Board.
Line fuse blows.	SCR Diode Module is defective.	Check SCR/Diode Module.
	IBGT Module is defective.	Check IBGT Module.
	VSD Logic Board is defective.	Replace VSD Logic Board.
	SCR Trigger Board is defective.	Replace SCR Trigger Board.
Chiller fault: Low ambient temperature	Ambient temperature is lower than the programmed operating limit.	Check the programmed cutout and determine if it is programmed correctly.
	Ambient Sensor is defective.	Check the panel against the thermometer reading of ambient temperature.
Chiller fault: High ambient temperature	Ambient Temperature is above the maximum operating limit.	Check outside air temperature.
	Ambient Sensor is defective.	Check the Panel Display against Thermometer reading of Ambient Temperature at the sensor.
Chiller fault: Low leaving chilled liquid	Leaving chilled liquid temperature drops faster than the unit can unload.	Check for restricted flow.
		Check for rapid flow changes.
		Water loop is too small.
		Flow is below minimum for chiller.
	Chilled Water Sensor is defective.	Check Sensor against Temp. Gauge in water line.
		Check Sensor for intermittent operation.
		Check Wiring for shorts or opens.
System fault: Control voltage	System Fuse is blown.	Check respective system Fuse 20FU or 21FU.

Note: Always remove power to the chiller and ensure the DC Bus voltage has bled off.

© 2025 Johnson Controls. All rights reserved.

Table 25 - Troubleshooting guide (cont'd)

Problem	Possible cause	Action
System fault: High discharge pressure	Coils dirty.	Check and clean coils.
	Coils are damaged.	Comb out fins.
	Fans NOT operating.	Check fan fuses.
		Check fan rotation.
		Check fan motor/blade.
	System is overcharged.	Remove charge and check subcooling.
System fault: High discharge temperature	Discharge Temperature Sensor is defective.	Check Sensor.
	Condenser Fans NOT operating or are running backwards.	Check Fans.
	Coils dirty.	Check and clean Coils.
	High Superheat.	Measure Superheat with gauges and thermocouple. Determine cause.
System fault: High motor temperature	High Motor temperature input from one of the sensors.	Refrigerant charge low. Check subcooling.
		Excess charge in system, High discharge pressure. Check subcooling.
		High Superheat. Drain/Feed Valves NOT controlling. Isolate cause.
		Motor Sensor reading incorrectly. Program panel to ignore a single sensor.
		Economizer Solenoid energized at low speeds. Valve is leaking through.
System fault: Low suction pressure	Low charge.	Check subcooling.
	Transducer reads incorrectly.	Check transducer against a gauge.
	Suction Temp. Sensor reads incorrectly.	Check sensor against a thermocouple.
	Low flow.	Check flow.
	Condenser Drain (Flash Tank Feed) Valve NOT operating.	Check Feed and Drain Valve operation. Check superheat.
	Condenser or Drain (Flash Tank Feed) Valve defective.	Check Feed and Drain Valve operation. Check superheat.
System fault: Discharge pressure limiting	Discharge Transducer is defective.	Check transducer against a gauge.
	Ambient Temp. very high.	Normal operation.
	Fans not operating.	Check fan operation.
	Remote or local discharge pressure load limiting is programmed.	Normal operation.

Note: Always remove power to the chiller and ensure the DC Bus voltage has bled off.

© 2025 Johnson Controls. All rights reserved.

Table 25 - Troubleshooting guide (cont'd)

Problem	Possible cause	Action
System status: Motor current limiting	A high motor current anticipatory control has activated current limiting	Ambient temperature is high, normal response from controller
		Remote or panel limiting is in effect, Normal response.
		Excess charge in system, adjust charge.
		Condenser coils dirty, Clean condenser.
		Fans not operating. Check fans.
VSD fault: High baseplate temperature	Coolant level low.	Add coolant.
	Glycol pump is defective.	Replace Glycol Pump.
	VSD Board is defective	Replace VSD Logic Board.
	IBGT Module is defective.	Check defective IGBT Module.
VSD fault: Low DC Bus voltage	SCR/Diode Module is defective.	Check SCR/Diode Module.
	SCR Trigger Board is defective.	Check SCR Trigger Board.

Note: Always remove power to the chiller and ensure the DC Bus voltage has bled off.

© 2025 Johnson Controls. All rights reserved.

R-134a conversion table - pressure to saturated temperatures

The following table can be used for converting R-134a pressures to their equivalent saturated temperatures.

Table 31 - R-134a pressure to saturated temperature conversion

Pressure psig (Bar)	Dew point temperature ºF (ºC)	Pressure psig (Bar)	Dew point temperature ºF (ºC)	Pressure psig (Bar)	Dew point temperature ºF (ºC)
0.0 (0)	-14.9 (-26.1)	135.0 (9.31)	105.0 (40.6)	270.0 (18.62)	152.0 (66.7)
5.0 (.34)	-3.0 (-19.4)	140.0 (9.65)	107.2 (41.8)	275.0 (18.96)	153.4 (67.4)
10.0 (.69)	6.7 (-14.1)	145.0 (10.0)	109.4 (43)	280.0 (19.31)	154.7 (68.2)
15.0 (1.03)	14.9 (-9.5)	150.0 (10.34)	111.5 (44.2)	285.0 (19.65)	156.1 (68.9)
20.0 (1.38)	22.2 (-5.4)	155.0 (10.69)	113.6 (45.3)	290.0 (19.99)	157.4 (69.7)
25.0 (1.72)	28.7 (-1.8)	160.0 (11.03)	115.6 (46.4)	295.0 (20.34)	158.7 (70.4)
30.0 (2.07)	34.6 (1.4)	165.0 (11.38)	117.6 (47.6)	300.0 (20.68)	160.0 (71.1)
35.0 (2.41)	40.0 (4.4)	170.0 (11.72)	119.6 (48.7)	305.0 (21.03)	161.3 (71.8)
40.0 (2.76)	45.0 (7.2)	175.0 (12.07)	121.5 (49.7)	310.0 (21.37)	162.5 (72.5)
45.0 (3.10)	49.6 (9.8)	180.0 (12.41)	123.3 (50.7)	315.0 (21.72)	163.8 (73.2)
50.0 (3.45)	54.0 (12.2)	185.0 (12.76)	125.2 (51.8)	320.0 (22.06)	165.0 (73.9)
55.0 (3.79)	58.1 (14.5)	190.0 (13.10)	126.9 (52.7)	325.0 (22.41)	166.2 (74.6)
60.0 (4.14)	62.0 (16.7)	195.0 (13.44)	128.7 (53.7)	330.0 (22.75)	167.4 (75.2)
65.0 (4.48)	65.7 (18.7)	200.0 (13.79)	130.4 (54.7)	335.0 (23.10)	168.6 (75.9)
70.0 (4.83)	69.2 (20.7)	205.0 (14.13)	132.1 (55.6)	340.0 (23.44)	169.8 (76.6)
75.0 (5.17)	72.6 (22.6)	210.0 (14.48)	133.8 (56.6)	345.0 (23.79)	171.0 (77.2)
80.0 (5.52)	75.9 (24.4)	215.0 (14.82)	135.5 (57.5)	350.0 (24.13)	172.1 (77.8)
85.0 (5.86)	79.0 (26.1)	220.0 (15.17)	137.1 (58.4)	355.0 (24.48)	173.3 (78.5)
90.0 (6.21)	82.0 (27.8)	225.0 (15.51)	138.7 (59.3)	360.0 (24.82)	174.4 (79.1)
95.0 (6.55)	84.9 (29.4)	230.0 (15.86)	140.2 (60.1)	365.0 (25.17)	175.5 (79.7)
100.0 (6.89)	87.7 (30.9)	235.0 (16.20)	141.8 (61)	370.0 (25.51)	176.6 (80.3)
105.0 (7.24)	90.4 (32.4)	240.0 (16.55)	143.3 (61.8)	375.0 (25.86)	177.7 (80.9)
110.0 (7.58)	93.0 (33.9)	245.0 (16.89)	144.8 (62.3)	380.0 (26.20)	178.8 (81.6)
115.0 (7.93)	95.5 (35.3)	250.0 (17.24)	146.3 (63.5)	385.0 (26.54)	179.9 (82.2)
120.0 (8.27)	98.0 (36.7)	255.0 (17.58)	147.7 (64.3)	390.0 (26.89)	180.9 (82.7)
125.0 (8.62)	100.4 (38)	260.0 (17.93)	149.2 (65.1)	395.0 (27.23)	182.0 (83.3)
130.0 (8.96)	102.7 (39.3)	265.0 (18.27)	150.6 (65.9)	400.0 (27.58)	183.0 (83.9)

© 2025 Johnson Controls. All rights reserved.

R-513A conversion table - pressure to saturated temperature

The following table can be used for conversion of refrigerant R-513A from pressure to saturated temperature.

Table 32 - R-513A refrigerant pressure to saturated temperature

Pressure (psig)	Temperature average (°F)	Pressure (psig)	Temperature average (°F)	Pressure (psig)	Temperature average (°F)	Pressure (psig)	Temperature average (°F)
0	-20.5	130	99.3	260	146.7	390	179.1
5	-8.4	135	101.6	265	148.1	395	180.2
10	1.4	140	103.9	270	149.6	400	181.2
15	9.8	145	106.1	275	151.0	405	182.3
20	17.2	150	108.3	280	152.4	410	183.3
25	23.8	155	110.4	285	153.7	415	184.3
30	29.8	160	112.4	290	155.1	420	185.4
35	35.3	165	114.5	295	156.4	425	186.4
40	40.4	170	116.4	300	157.7	430	187.4
45	45.1	175	118.4	305	159.0	435	188.4
50	49.5	180	120.3	310	160.3	440	189.4
55	53.7	185	122.2	315	161.6	445	190.3
60	57.7	190	124.0	320	162.9	450	191.3
65	61.5	195	125.8	325	164.1	455	192.2
70	65.1	200	127.6	330	165.3	460	193.2
75	68.5	205	129.3	335	166.6	465	194.1
80	71.9	210	131.0	340	167.8	470	195.1
85	75.0	215	132.7	345	168.9	475	196.0
90	78.1	220	134.3	350	170.1	480	196.9
95	81.0	225	136.0	355	171.3	485	197.8
100	83.9	230	137.6	360	172.4	490	198.7
105	86.6	235	139.1	365	173.6	495	199.6
110	89.3	240	140.7	370	174.7	500	200.4
115	91.9	245	142.2	375	175.8	505	201.3
120	94.4	250	143.7	380	176.9		
125	96.9	255	145.2	385	178.0		

Notes:
1. Temperature data is mean of vapor temperature and liquid temperature.
2. Source of the tabulated data above: REFPROP 9.1214, R513a.MIX, HMX.BNC from Chemours, saturation table.
   Data generated by Justin P. Kauffman on and as of 07/29/2016.

© 2025 Johnson Controls. All rights reserved.

R-513A conversion table - temperature to equivalent pressure

The following table can be used for conversion of refrigerant R-513A from temperature to equivalent pressure.

Table 33 - R-513A Refrigerant temperature to pressure

Temperature (°F)	Pressure (psig)	Temperature (°F)	Pressure (psig)	Temperature (°F)	Pressure (psig)	Temperature (°F)	Pressure (psig)
-100	-13.52	-24	-1.25	52	52.89	128	201.25
-98	-13.42	-22	-0.55	54	55.31	130	207.04
-96	-13.32	-20	0.18	56	57.81	132	212.94
-94	-13.21	-18	0.94	58	60.37	134	218.96
-92	-13.09	-16	1.73	60	62.99	136	225.10
-90	-12.96	-14	2.55	62	65.69	138	231.36
-88	-12.82	-12	3.40	64	68.45	140	237.74
-86	-12.68	-10	4.28	66	71.29	142	244.25
-84	-12.53	-8	5.20	68	74.19	144	250.88
-82	-12.37	-6	6.15	70	77.18	146	257.64
-80	-12.20	-4	7.14	72	80.23	148	264.53
-78	-12.01	-2	8.16	74	83.36	150	271.56
-76	-11.82	0	9.22	76	86.57	152	278.72
-74	-11.62	2	10.32	78	89.86	154	286.00
-72	-11.40	4	11.46	80	93.23	156	293.44
-70	-11.17	6	12.63	82	96.67	158	301.01
-68	-10.93	8	13.85	84	100.20	160	308.72
-66	-10.68	10	15.11	86	103.82	162	316.58
-64	-10.41	12	16.41	88	107.51	164	324.58
-62	-10.13	14	17.76	90	111.30	166	332.74
-60	-9.83	16	19.14	92	115.17	168	341.05
-58	-9.52	18	20.58	94	119.12	170	349.51
-56	-9.19	20	22.06	96	123.17	172	358.12
-54	-8.85	22	23.59	98	127.31	174	366.90
-52	-8.49	24	25.16	100	131.54	176	375.85
-50	-8.11	26	26.79	102	135.87	178	384.96
-48	-7.71	28	28.47	104	140.29	180	394.23
-46	-7.29	30	30.19	106	144.80	182	403.69
-44	-6.86	32	31.97	108	149.42	184	413.32
-42	-6.40	34	33.81	110	154.13	186	423.14
-40	-5.92	36	35.70	112	158.94	188	433.14
-38	-5.42	38	37.64	114	163.86	190	443.34
-36	-4.90	40	39.64	116	168.88	192	453.73
-34	-4.35	42	41.70	118	174.00	194	464.33
-32	-3.78	44	43.81	120	179.23	196	475.15
-30	-3.19	46	45.99	122	184.57	198	486.19
-28	-2.57	48	48.23	124	190.02	200	497.47
-26	-1.92	50	50.53	126	195.58		

Notes:
1. Temperature data is mean of vapor temperature and liquid temperature.
2. Source of the tabulated data above: REFPROP 9.1214, R513a.MIX, HMX.BNC from Chemours, saturation table. Data generated by Justin P. Kauffman on and as of 07/29/2016.

© 2025 Johnson Controls. All rights reserved.

Chilled liquid and suction temperature sensor input voltage

Table 34 - Temperature input voltage sensor (Measured signal to shield at the sensor)

Temperature ºF (°c)	Voltage	Temperature °F (°c)	Voltage	Temperature °F (°c)	Voltage
16.1 (-8.8)	1.52	35.9 (2.2)	2.19	55.6 (13.1)	2.85
16.7 (-8.5)	1.54	36.5 (2.5)	2.21	56.3 (13.5)	2.87
17.3 (-8.2)	1.56	37.0 (2.8)	2.23	56.9 (13.8)	2.89
17.9 (-7.8)	1.58	37.6 (3.1)	2.25	57.5 (14.2)	2.91
18.5 (-7.5)	1.60	38.2 (3.4)	2.27	58.1 (14.5)	2.93
19.1 (-7.2)	1.62	38.7 (3.7)	2.29	58.7 (14.8)	2.95
19.7 (-6.8)	1.64	39.3 (4.1)	2.30	59.4 (15.2)	2.97
20.3 (-6.5)	1.66	39.9 (4.4)	2.32	60.0 (15.6)	2.99
20.9 (-6.2)	1.68	40.4 (4.7)	2.34	60.6 (15.9)	3.01
21.5 (-5.8)	1.70	41.0 (5.0)	2.36	61.3 (16.3)	3.03
22.1 (-5.5)	1.72	41.6 (5.3)	2.38	61.9 (16.6)	3.05
22.7 (-5.2)	1.74	42.1 (5.6)	2.40	62.5 (16.9)	3.07
23.3 (-4.8)	1.76	42.7 (5.9)	2.42	63.2 (17.3)	3.09
23.9 (-4.5)	1.78	43.3 (6.3)	2.44	63.8 (17.7)	3.11
24.5 (-4.2)	1.80	43.9 (6.6)	2.46	64.5 (18.1)	3.13
25.0 (-3.9)	1.82	44.4 (6.9)	2.48	65.1 (18.4)	3.14
25.6 (-3.6)	1.84	45.0 (7.2)	2.50	65.8 (18.8)	3.16
26.2 (-3.2)	1.86	45.6 (7.5)	2.52	66.5 (19.2)	3.18
26.8 (-2.9)	1.88	46.2 (7.9)	2.54	67.1 (19.5)	3.20
27.3 (-2.6)	1.90	46.7 (8.2)	2.56	67.8 (19.9)	3.22
27.9 (-2.8)	1.91	47.3 (8.5)	2.58	68.5 (20.3)	3.24
28.5 (-1.9)	1.93	47.9 (8.8)	2.60	69.2 (20.7)	3.26
29.0 (-1.7)	1.95	48.5 (9.2)	2.62	69.9 (21.1)	3.28
29.6 (-1.3)	1.97	49.1 (9.5)	2.64	70.6 (21.4)	3.30
30.2 (-1)	1.99	49.7 (9.8)	2.66	71.3 (21.8)	3.32
30.8 (-0.7)	2.01	50.3 (10.2)	2.68	72.0 (22.2)	3.34
31.3 (-0.4)	2.03	50.8 (10.4)	2.70	72.7 (22.6)	3.36
31.9 (-0.1)	2.05	51.4 (10.8)	2.71	73.4 (23)	3.38
32.5 (0.3)	2.07	52.0 (11.1)	2.73	74.2 (23.4)	3.40
33.0 (0.6)	2.09	52.6 (11.4)	2.75	74.9 (23.8)	3.42
33.6 (0.9)	2.11	53.2 (11.8)	2.77		
34.2 (1.2)	2.13	53.8 (12.1)	2.79		
34.8 (1.5)	2.15	54.5 (12.5)	2.81		
35.3 (1.8)	2.17	55.0 (12.8)	2.83		

© 2025 Johnson Controls. All rights reserved.

Table 35 - Outside air temperature sensor input voltage, measured signal to shield at the sensor

Temperature ºF (°c)	Voltage	Temperature ºF (°c)	Voltage	Temperature ºF (°c)	Voltage
0.24 (-17.6)	0.68	49.8 (9.9)	2.00	93.3 (34.1)	3.31
1.79 (-16.8)	0.71	50.7 (10.4)	2.03	94.4 (34.7)	3.34
3.30 (-15.9)	0.74	51.6 (10.9)	2.06	95.6 (35.3)	3.37
4.76 (-15.1)	0.77	52.5 (11.4)	2.09	96.8 (36)	3.40
6.19 (-14.3)	0.80	53.4 (11.9)	2.11	98.0 (36.7)	3.43
7.58 (-13.6)	0.83	54.3 (12.4)	2.14	99.2 (37.3)	3.46
8.94 (-12.8)	0.85	55.3 (12.9)	2.17	100.4 (38)	3.49
10.3 (-12.1)	0.88	56.2 (13.4)	2.20	101.6 (38.7)	3.52
11.6 (-11.3)	0.91	57.1 (13.9)	2.23	102.9 (39.4)	3.55
12.8 (-10.7)	0.94	58.0 (14.4)	2.26	104.2 (40.1)	3.57
14.1 (-9.9)	0.97	58.9 (14.9)	2.29	105.5 (40.8)	3.60
15.3 (-9.3)	1.00	59.8 (15.4)	2.32	106.8 (41.6)	3.63
16.5 (-8.6)	1.03	60.7 (15.9)	2.35	108.1 (42.3)	3.66
17.7 (-7.9)	1.06	61.6 (16.4)	2.38	109.5 (43.1)	3.69
18.9 (-7.3)	1.09	62.6 (17)	2.41	110.9 (43.8)	3.72
20.0 (-6.7)	1.12	63.5 (17.5)	2.44	112.3 (44.6)	3.75
21.2 (-6)	1.15	64.4 (18)	2.47	113.8 (45.4)	3.78
22.3 (-5.4)	1.18	65.3 (18.5)	2.50	115.2 (46.2)	3.81
23.4 (-4.8)	1.21	66.3 (19.1)	2.52	116.7 (47.1)	3.84
24.4 (-4.2)	1.24	67.2 (19.5)	2.55	118.3 (47.9)	3.87
25.5 (-3.6)	1.26	68.1 (20.1)	2.58	119.9 (48.8)	3.90
26.6 (-3)	1.26	69.1 (20.6)	2.61	121.5 (49.7)	3.93
27.6 (-2.4)	1.32	70.0 (21.1)	2.64	123.2 (50.7)	3.96
28.7 (-1.8)	1.35	70.9 (21.6)	2.67	124.9 (51.6)	3.98
29.7 (-1.3)	1.38	71.9 (22.2)	2.70	126.6 (52.6)	4.01
30.7 (-0.7)	1.41	72.8 (22.7)	2.73	128.4 (53.6)	4.04
31.7 (-0.2)	1.44	73.8 (23.2)	2.76	130.3 (54.6)	4.07
32.7 (0.4)	1.47	74.8 (23.8)	2.76		
33.7 (0.9)	1.50	75.8 (24.3)	2.82		
34.7 (1.5)	1.53	76.7 (24.8)	2.85		
35.7 (2.1)	1.56	77.7 (25.4)	2.88		
36.7 (2.6)	1.59	78.7 (25.9)	2.91		
37.6 (3.1)	1.62	79.7 (26.5)	2.93		
38.6 (3.7)	1.65	80.7 (27.1)	2.96		
39.6 (4.2)	1.67	81.7 (27.6)	2.99		
40.5 (4.7)	1.70	82.7 (28.2)	3.02		
41.4 (5.2)	1.73	83.6 (28.7)	3.05		
42.4 (5.8)	1.76	84.6 (29.2)	3.08		
43.3 (6.3)	1.79	85.7 (29.8)	3.11		
44.3 (6.8)	1.82	86.7 (30.4)	3.13		
45.2 (7.3)	1.85	87.8 (31)	3.16		
46.1 (7.8)	1.88	88.9 (31.6)	3.19		
47.0 (8.3)	1.91	90.1 (32.3)	3.22		
48.0 (8.9)	1.94	91.1 (32.8)	3.25		
48.9 (9.4)	1.97	92.2 (33.4)	3.28		

© 2025 Johnson Controls. All rights reserved.

Table 36 - Pressure transducer output voltage, measured signal to return at the transducer

Suction pressure transducer (125 psig)		Discharge condenser liquid pressure and discharge pressure transducer (400 psig)	
Pressure	**Voltage**	**Pressure**	**Voltage**
0	0.50	0	0.50
5	0.66	25	0.75
10	0.82	50	1.00
15	0.98	75	1.25
20	1.14	100	1.50
25	1.30	125	1.75
30	1.46	150	2.00
35	1.62	175	2.25
40	1.78	200	2.50
45	1.94	225	2.75
50	2.10	250	3.00
55	2.26	275	3.25
60	2.42	300	3.50
65	2.58	325	3.75
70	2.74	350	4.00
75	2.90	375	4.25
80	3.06	400	4.50
85	3.22		
90	3.38		
95	3.54		
100	3.70		
105	3.86		
110	4.02		
115	4.18		
120	4.34		
125	4.50		

© 2025 Johnson Controls. All rights reserved.

Table 37 - Motor temperature sensor resistance (Check at the motor)

Temperature ºF (ºC)	R nominal (ohms)	R tol (± %)	Rmin (ohms)	Rmax (ohms)
-4 (-20)	97,062	5.00	92,209	101,915
5 (-15)	77,941	4.60	69,586	76,296
14 (-10)	55,391	4.20	52,996	57,643
23 (-5)	42,324	3.85	40,695	43,954
32 (0)	32,654	3.50	31,511	33,797
41 (5)	25,396	3.15	24,596	26,196
50 (10)	19,903	2.80	19,346	20,461
59 (15)	15,713	2.50	15,321	16,106
68 (20)	12,493	2.20	12,218	12,768
77 (25)	10,000	2.00	9,800	10,200
86 (30)	8,056	2.40	7,863	8,250
95 (35)	6,531	2.70	6,354	6,707
104 (40)	5,326	3.00	5,166	5,485
113 (45)	4,368	3.25	4,226	4,510
122 (50)	3,602	3.50	3,476	3,728
131 (55)	2,986	3.75	2,874	3,098
140 (60)	2,488	4.00	2,389	2,588
149 (65)	2,083	4.25	1,995	2,172
158 (70)	1,753	4.50	1,674	1,832
167 (75)	1,481	4.75	1,411	1,551
176 (80)	1,257	5.00	1,194	1,321
185 (85)	1,071	5.20	1,016	1,127
194 (90)	916.9	5.40	867.4	966.4
203 (95)	787.7	5.60	743.6	831.9
212 (100)	679.3	5.80	639.9	718.7
221 (105)	587.9	6.00	552.6	623.2
230 (110)	510.6	6.20	479.9	542.3
239 (115)	445.0	6.40	416.5	473.5
248 (120)	389.0	6.60	363.4	414.7
257 (125)	341.2	6.70	318.4	364.1
266 (130)	300.2	6.90	279.5	320.9
275 (135)	264.9	7.10	246.1	283.7
284 (140)	234.4	7.30	217.3	251.5
293 (145)	208.0	7.40	192.6	223.3
302 (150)	185.0	7.50	171.1	198.9

© 2025 Johnson Controls. All rights reserved.

© 2025 Johnson Controls. All rights reserved.

Section 10: Decommissioning, dismantling, and disposal

Never release refrigerant to the atmosphere when emptying the refrigerating circuits. Suitable retrieval equipment must be used. If reclaimed refrigerant cannot be reused. It must be returned to the manufacturer.

Never discard used compressor oil, as it contains refrigerant in solution. Return used oil to the oil manufacturer.

Never discard used compressor oil, as it contains refrigerant in the solution. Return used oil to the oil manufacturer.

Unless otherwise indicated, the operations described as follows can be performed by any properly trained maintenance technician.

General

Isolate all sources of electrical supply to the unit including any control system supplies switched by the unit. Ensure that all points of isolation are secured in the 'OFF' position. The supply cables may then be disconnected and removed. For connection points See *Section 4: Installation*.

Remove all refrigerant from each system of the unit into a suitable container using a refrigerant reclaim or recovery unit. This refrigerant may then be re-used, if appropriate, or returned to the manufacturer for disposal. Under NO circumstances should refrigerant be vented to atmosphere. Drain the refrigerant oil from each system into a suitable container and dispose of according to local laws and regulations governing the disposal of oily wastes. Any spilt oil should be mopped up and disposed of as mentioned above.

Isolate the unit heat exchanger from the external water systems and drain the heat exchanger section of the system. If no isolation valves are installed it may be necessary to drain the complete system.

If glycol or similar solutions have been used in the water system, or chemical additives are contained, the solution MUST be disposed of in a suitable and safe manner. Under NO circumstances should any system containing glycol or similar solutions be drained directly into domestic waste or natural water systems.

After draining, the water pipework can be disconnected and removed.

Packaged units can generally be removed in one piece after disconnection as above. Any fixing down bolts should be removed and then the unit should be lifted from position using the points provided and equipment of adequate lifting capacity.

See *Section 4: Installation* for unit installation instructions, *Section 9: Maintenance* for unit weights and *Section 3: Rigging, handling, and storage* for handling.

Units which cannot be removed in one piece after disconnection as above must be dismantled in position. Special care should be taken regarding the weight and handling of each component. Where possible units should be dismantled in the reverse order of installation.

Residual refrigerant oil and glycol or similar solutions may remain in some parts of the system. These should be mopped up and disposed of as described above.

It is important to ensure that whilst components are being removed the remaining parts are supported in a safe manner.

Only use lifting equipment of adequate capacity.

After removal from position the unit parts may be disposed of according to local laws and regulations.

© 2025 Johnson Controls. All rights reserved.

The following factors can be used to convert from English to the most common SI Metric values.

Table 38 - SI metric conversion

Measurement	Multiply English unit	By factor	To obtain metric unit
Capacity	Tons refrigerant effect (ton)	3.516	Kilowatts (kW)
Power	Horsepower	0.7457	Kilowatts (kW)
Flow rate	Gallons/Minute (gpm)	0.0631	Liters/Second (l/s)
Length	Feet (ft)	0.3048	Meters (m)
	Inches (in.)	25.4	Millimeters (mm)
Weight	Pounds (lb)	0.4536	Kilograms (kg)
Velocity	Feet/Second (fps)	0.3048	Meters/Second (m/s)
Pressure drop	Feet of water (ft)	2.989	Kilopascals (kPa)
	Pounds/Square Inch (psig)	6.895	Kilopascals (kPa)

Temperature

Example: (45.0°F - 32°) x 0.5556 = 7.22°C.

To convert a temperature range (that is a range of 10°F) from Fahrenheit to Celsius, multiply by 5/9 or 0.5556.

Example: 10.0°F range x 0.5556 = 5.6 °C range.

© 2025 Johnson Controls. All rights reserved.

Notes

© 2025 Johnson Controls. All rights reserved.

5000 Renaissance Drive, New Freedom, Pennsylvania USA 17349
Form: 201.28-NM1.1 (1225)
Issue Date: December 22, 2025
Supersedes: 201.28-NM1.1 (724)

1-800-524-1330
www.johnsoncontrols.com

Subject to change without notice.
Printed in USA.