Nielsen enrobers

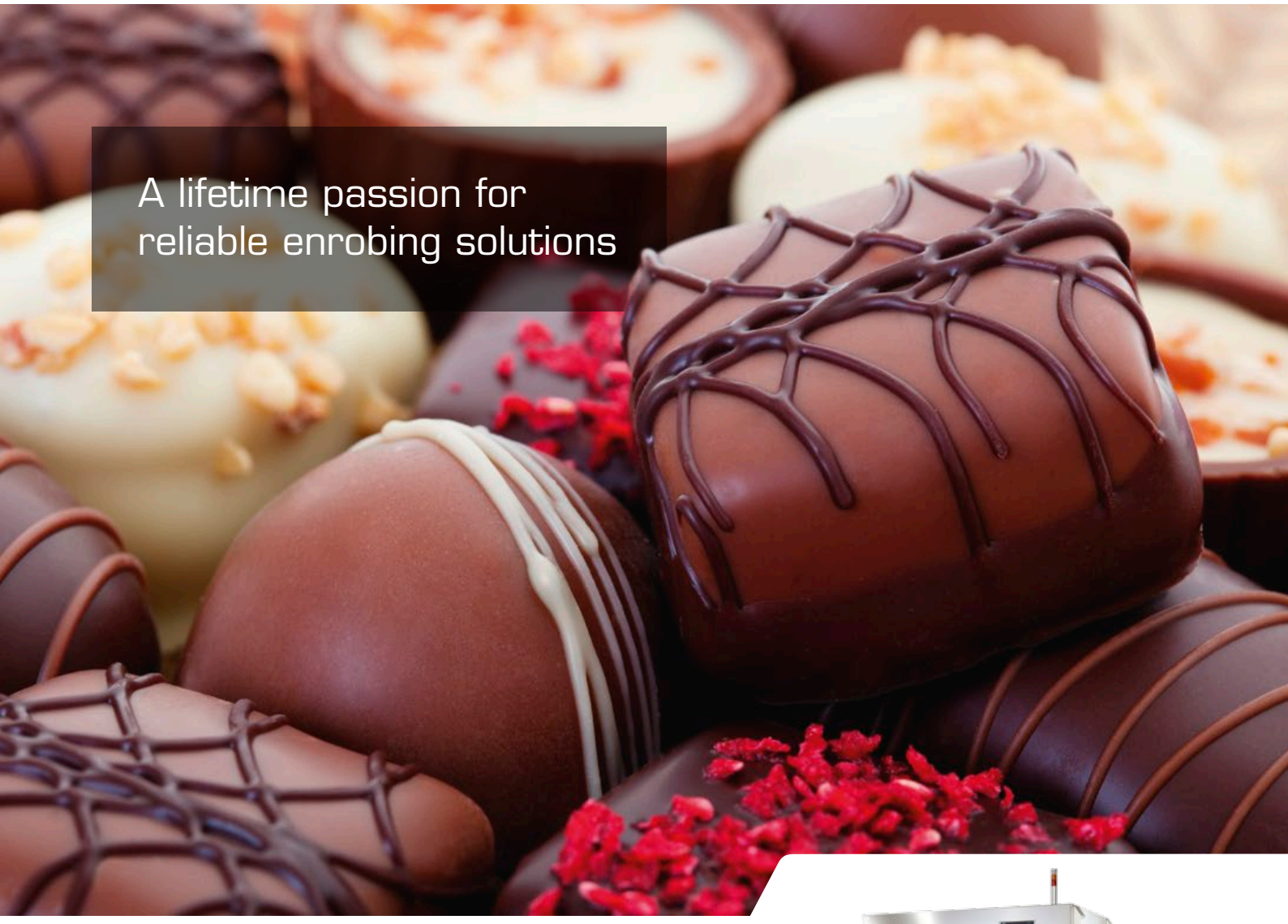

Welcome to our world

Nielsen ENERGY

A revolutionary enrober giving you efficiency and quality enhanced enrobed products. Also available in an XXL version for large scale production.

Nielsen Master

Accurate and reliable enrobing for any type of product. Also available in an XXL version for large scale production.

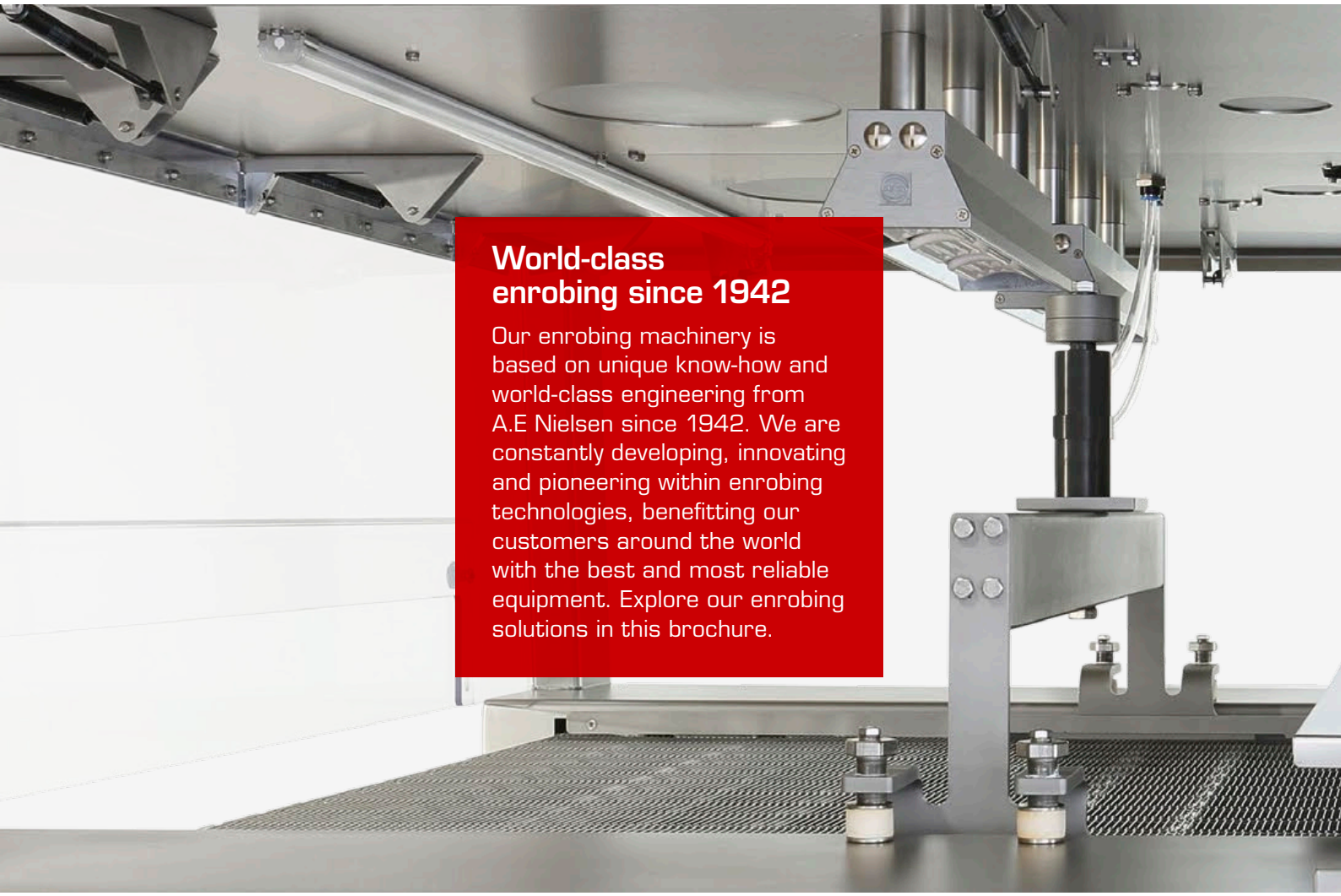

World-class enrobing since 1942

Our enrobing machinery is based on unique know-how and world-class engineering from A.E Nielsen since 1942. We are constantly developing, innovating and pioneering within enrobing technologies, benefitting our customers around the world with the best and most reliable equipment. Explore our enrobing solutions in this brochure.

Nielsen CaraCoat

Specially developed for enrobing chocolate, bakery and confectionery products with liquid caramel.

Nielsen Fondant

An enrober designed for enrobing chocolate, bakery and confectionery products with sugar/ icing fondant

Nielsen Junior

Flexible and accurate enrobing in a compact and high-quality design for medium and large sized production.

Nielsen Junior bottomer

An enrober for bottoming with chocolate and compound masses for chocolate, bakery and confectionery products.

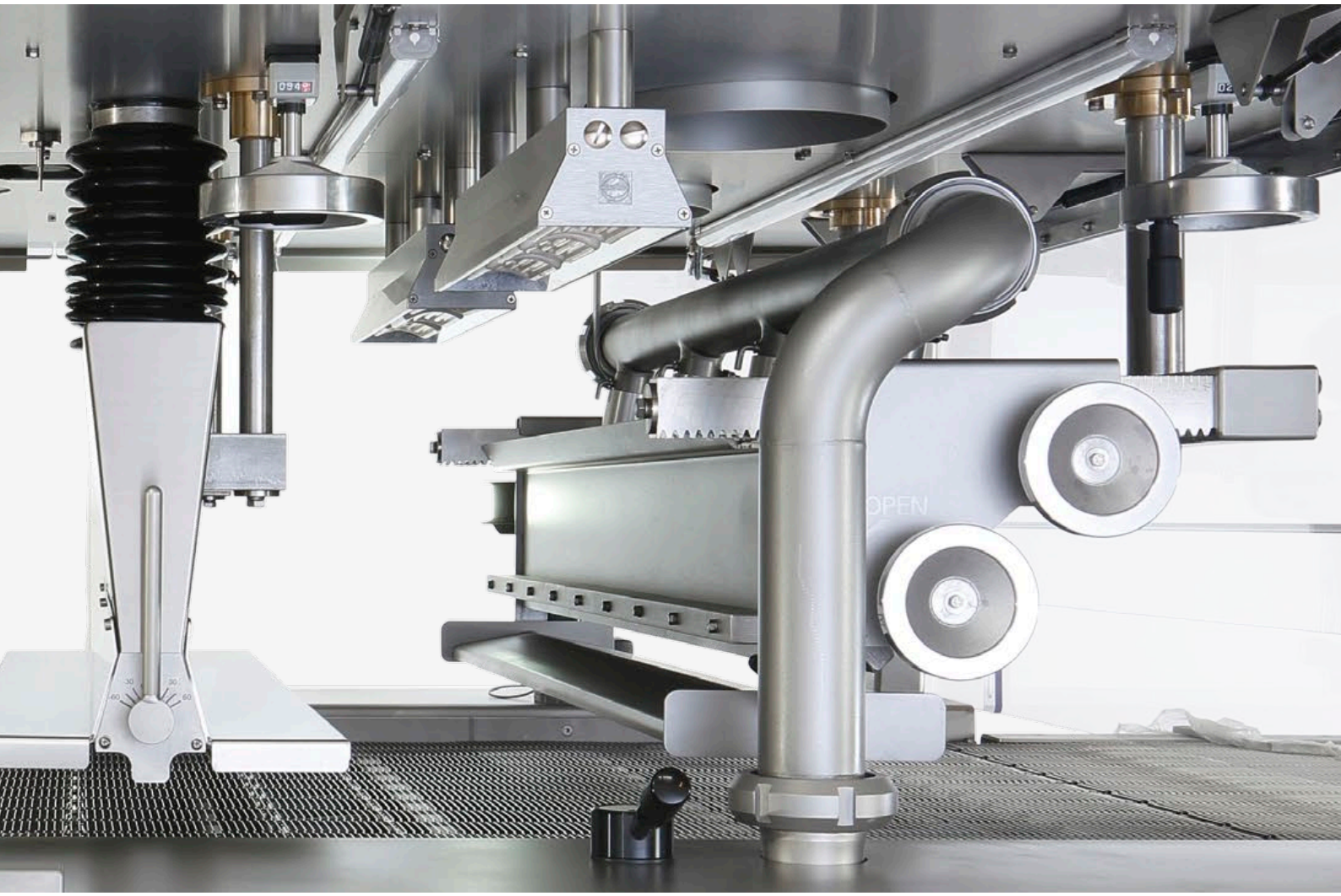

Nielsen Tempa 420

An enrober with a built-in tempering machine, moveable on wheels and with no requirement of water.

Nielsen Baby Flex

A compact and flexible enrober suited for small productions. Can be disassembled without tools.

Nielsen ENERGY

Energy enrobing concept

The patented Nielsen Energy enrober ensures substantial energy savings and long-time production with superior quality. The energy enrobing concept deviates from traditional enrobing by its capability to achieve superior control over the chocolate mixture, which is enrobed onto the product.

The Energy enrober works by a direct injection of the tempered chocolate mass from the tempering machine to the consumption flow.

Hereby we can ensure a homogenous tempered mass, as well as a constant tempering index and temperature in the Nielsen Energy enrober.

Process benefits

- Energy savings up to 2/3 when combined with a SuperNova Energy tempering machine
- The tempering index and the temperature of the mass mixture are kept at a constant level
- A chocolate temperature of 1°C higher than traditional results in more liquid chocolate and less air bubbles
- The thickness of enrobed layer is constant
- Longer shelf life for end product
- Better gloss due to perfect crystallization.

The three most commonly used enrobing process methods of today

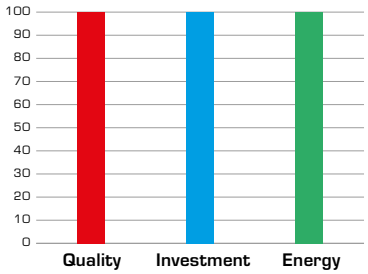

Direct enrobing

A high-quality enrobing but also a more expensive solution with regard to investment and energy.

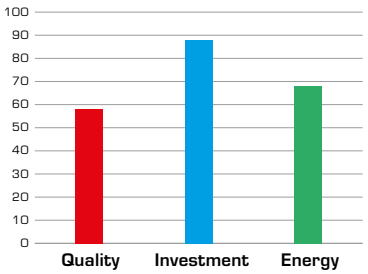

Traditional enrobing

The traditional process, slightly compromising the quality to keep down the cost and energy consumption.

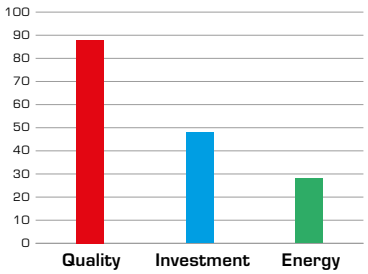

Nielsen ENERGY

A direct injection method which gives a high-quality one-to-one enrobing. A low-cost solution with regard to investment and energy.

Mechanical overview

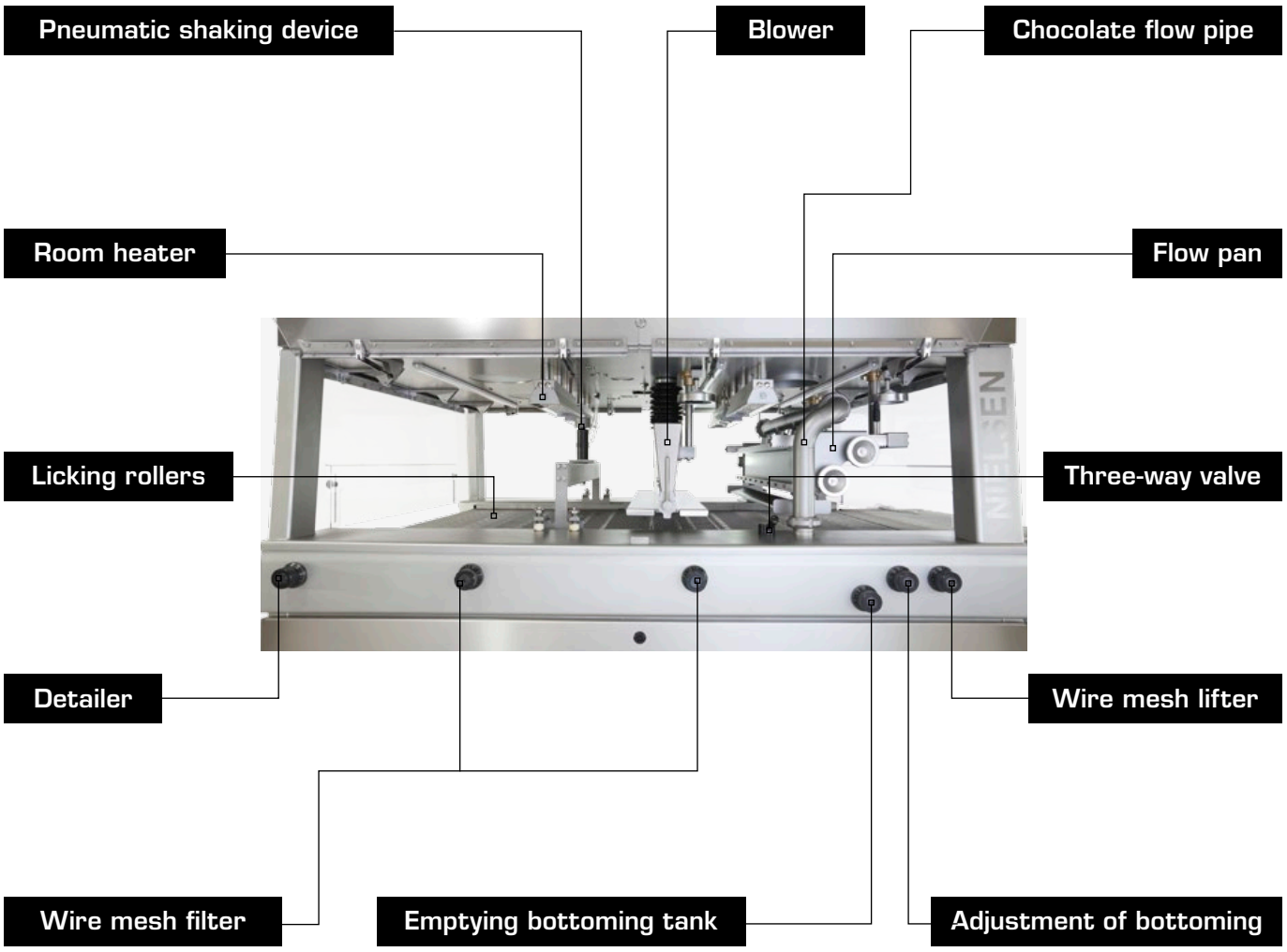

Water systems

Water system 1

For service tank, chocolate supply pump and pipe. Comes with a closed built-in water heat exchanger.

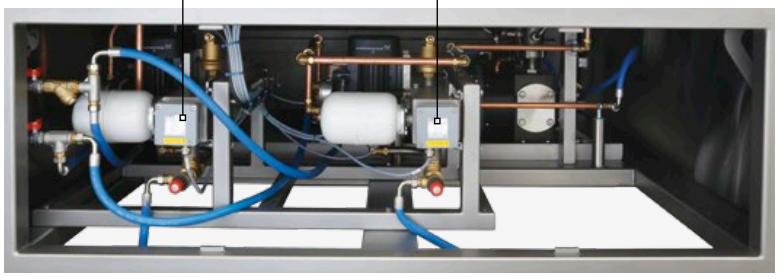

Water system 2

Has a higher temperature than system 1, which ensures the chocolate flow in the collecting tank towards the service tank.

Service tank

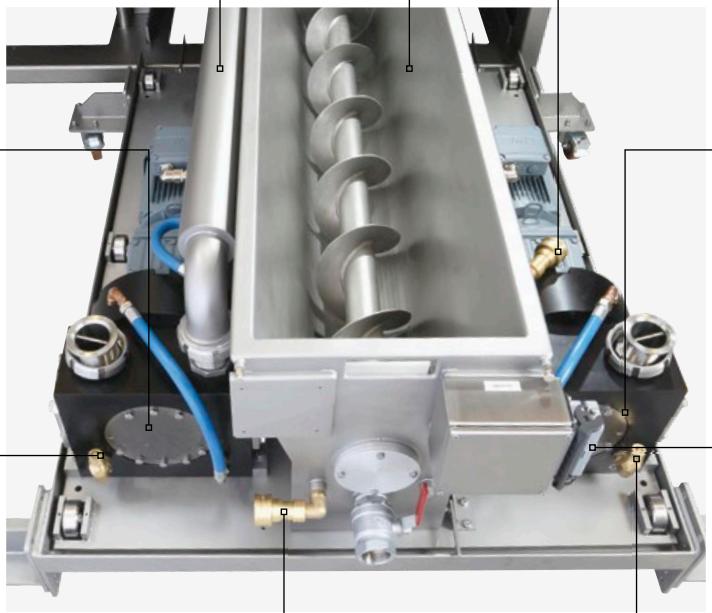

Nielsen Master

In clear-cut engineering and innovative design, the Nielsen Master enrober gives you reliability and high quality enrobing. A detachable lower section allows rapid and flexible changeover between any enrobing materials.

- Sanitary steel design
- 24-hour operation
- Minimal water consumption
- Advanced closed water system with built-in heat exchanger for precision temperature control
- Easy to clean and maintain
- Rapid changeover between enrobing materials
- Numerous auxiliary equipment options.

Nielsen Master XXL

If you require large scale production, the Nielsen Master is available in an XXL version. This gives you the benefit of having a machine designed for 24-hour production at high speed. To ensure high-quality enrobing, the curtain box provides two layers of enrobing.

Furthermore, the XXL version features two bottoming systems as well as two blowing systems. The Nielsen Master XXL delivers high performance, reliability and the best results regardless of your requirements and scale.

Nielsen Junior

The Nielsen Junior enrober is an easy-handling, efficient and cost saving solution. Designed with a detachable lower section, which allows rapid and flexible changeover between enrobing materials.

The Nielsen Junior enrober is an enrobing unit with high production capabilities and uniform coatings for any type of product.

- Stainless steel design
- 24-hour operation
- Minimal water consumption
- Advanced closed water system with built-in heat exchanger for precision temperature control
- Easy to clean and maintain
- Rapid changeover between enrobing materials
- Numerous auxiliary equipment options.

Mechanical overview

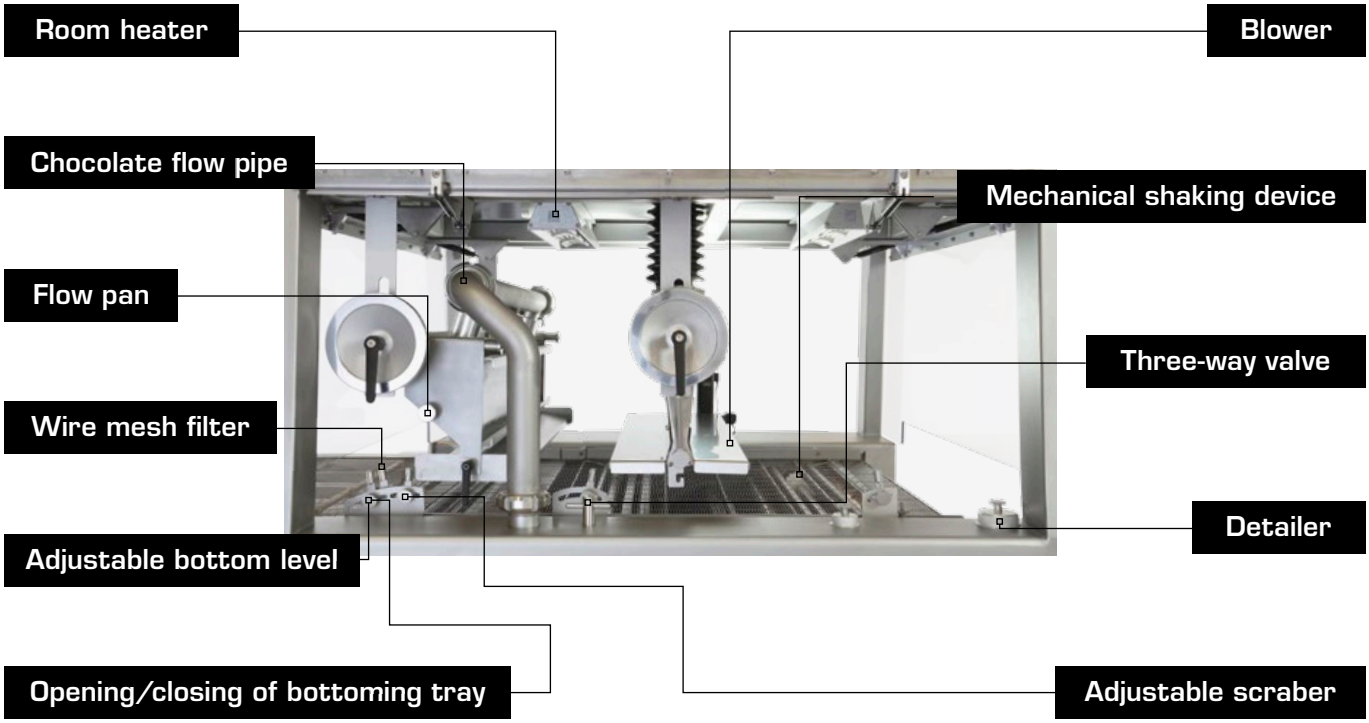

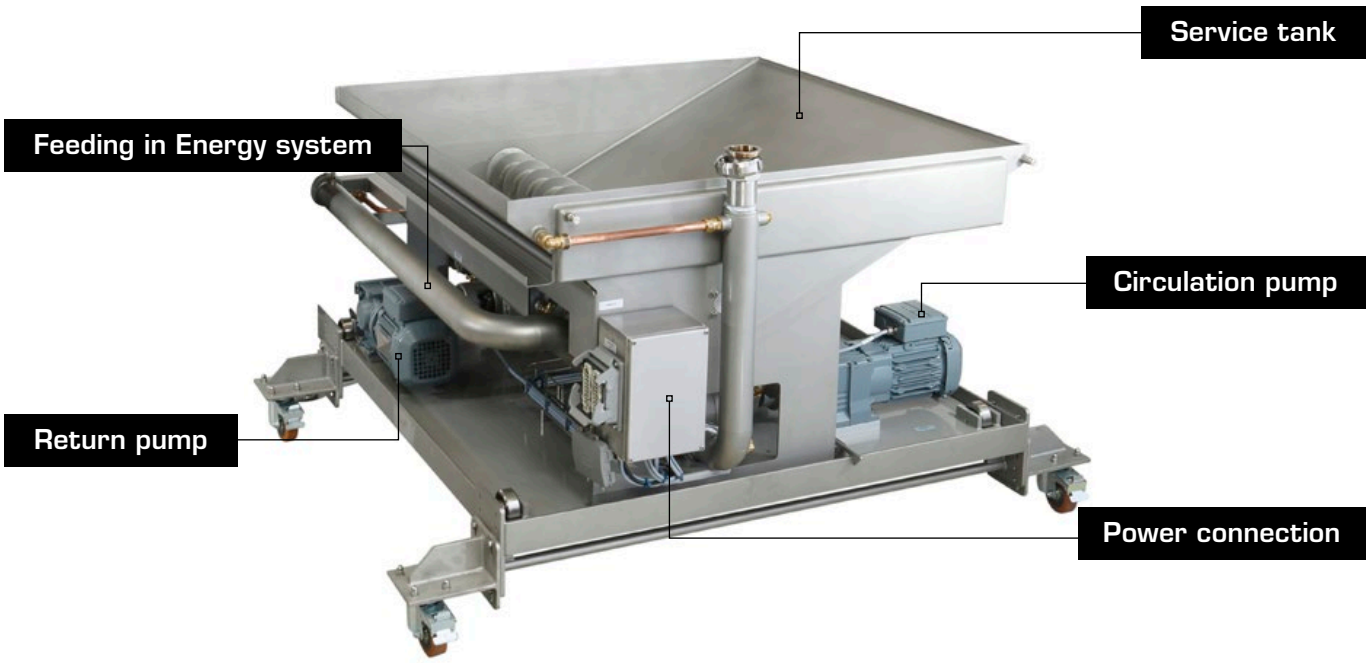

Bypass solution

Lifting and lowering of the Junior enrober and a retractable decorating table from the cooling tunnel, passing through the Junior.

Designed for easy application and removal of bypass system.

Easy insertion of conveyor belt.

The bypass solution enables you to easily have a conveyor belt going through the enrober.

Nielsen Junior bottomer

The Junior bottomer provides advanced and universal bottoming enrobing with chocolate and compound masses for chocolate, bakery and confectionery products. The Junior bottomer is designed for bottom enrobing of e.g. doughnuts and biscuits etc. The bottomer is designed in stainless steel and provides you reliable, consistent and high-quality enrobing in both left and right direction.

- Detachable lower section
- Stainless steel design
- Advanced closed water system
- 3 shift operation
- Uniform and precise coating of products.

The bottomer is equipped with a large removable bottoming roller and wire mesh lifter, shaking device and adjustable detailer rod.

Internal view of bottomer, consisting of advanced closed water system and chocolate return pump.

Nielsen CaraCoat

The Nielsen CaraCoat is specially developed for enrobing bars, wafers, biscuits and other kinds of confectionery products with liquid caramel. Designed for medium to high volume, long and short-run production of a wide range of products.

The Nielsen CaraCoat is equipped with steam pipes with nozzles for cleaning shaft scrapers and wire mesh belt. The high quality engineering gives you an operational reliability capable of producing 24/7.

- Stainless steel design
- 3 shift operation
- Uniform and precise coating of liquid caramel.

Steam pipes prevents enrobing materials from drying.

Nielsen Fondant

Nielsen Fondant is designed for enrobing bars, wafers, biscuits and other kinds of confectionery products with sugar icing/fondant. In order to control the humidity inside the enrobing machine and to prevent the sugar icing/fondant to dry out, steam is injected into the cabinet through nozzles.

Nielsen Baby Flex

The Nielsen Baby Flex enrober handles all enrobing works. Designed to be disassembled without tools, in small size and easy-handling, it is suitable for smaller productions. Available in a 320 mm band width and a 1,500 mm take-off table with plastic conveyor and paper roll.

The Nielsen Baby Flex handles chocolate, compound and sugar coating. The unit includes a shaking table making the enrobing smooth and uniform.

Nielsen Tempa 420

Nielsen Tempa 420 offers total enrobing for any production line with a max capacity of 80 kg/hour. The unit is flexible being mounted on wheels, making the enrobing unit moveable. The Nielsen Tempa 420 requires no cooling water and has a built-in tempering unit.

Complete Nielsen enrobing program

The Nielsen enrobing program consists of a selection of high-quality enrobers designed for reliable, precise and uniform enrobing of chocolate, bakery and confectionery products.

Whether you need enrobing with white, milk or dark chocolate, compound, caramel or sugar icing/fondant, the Nielsen enrobing program covers it.

The program includes machinery for small, medium and large scale in three shift operation.

- Nielsen Energy
- Nielsen Master
- Nielsen Junior & bottomer
- Nielsen CaraCoat
- Nielsen Fondant
- Nielsen Tempa 420
- Nielsen Baby Flex

Auxiliary equipment

- Turnover device
- Edge enrobing
- Partial enrobing
- Press-down wire mesh
- Press-down roller

> “The 20 years of working with Aasted, they have always been supporting our production and a very helpful partner.”
>
> Mr. R. Rune Forsberg,
> Hval Sjokoladefabrikk ASA

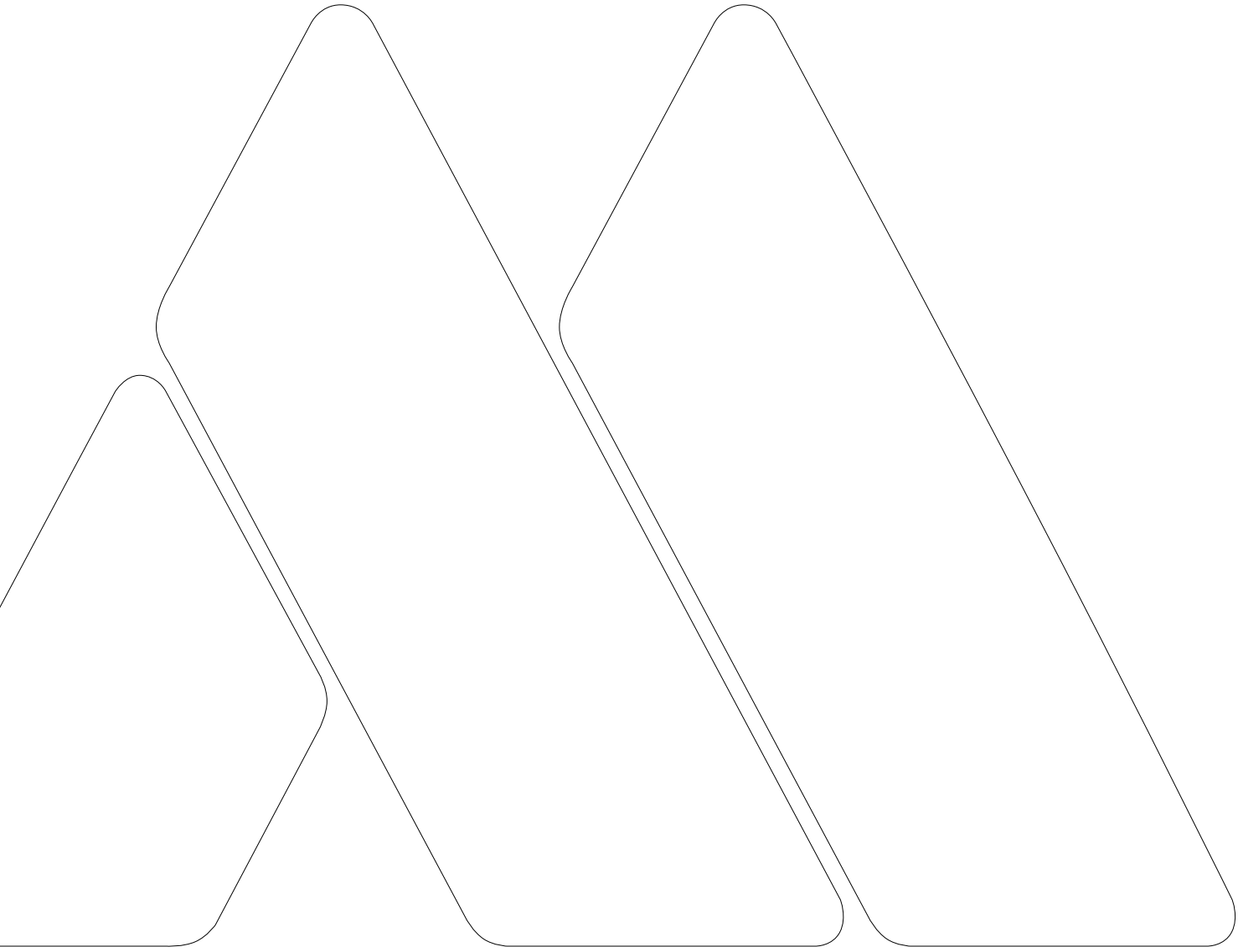

Aasted ApS
Bygmarken 7–17
3520 Farum
Denmark

P +45 4434 8000
F +45 4434 8080

mail@aasted.eu
www.aasted.eu

Get inspired on www.aasted.eu