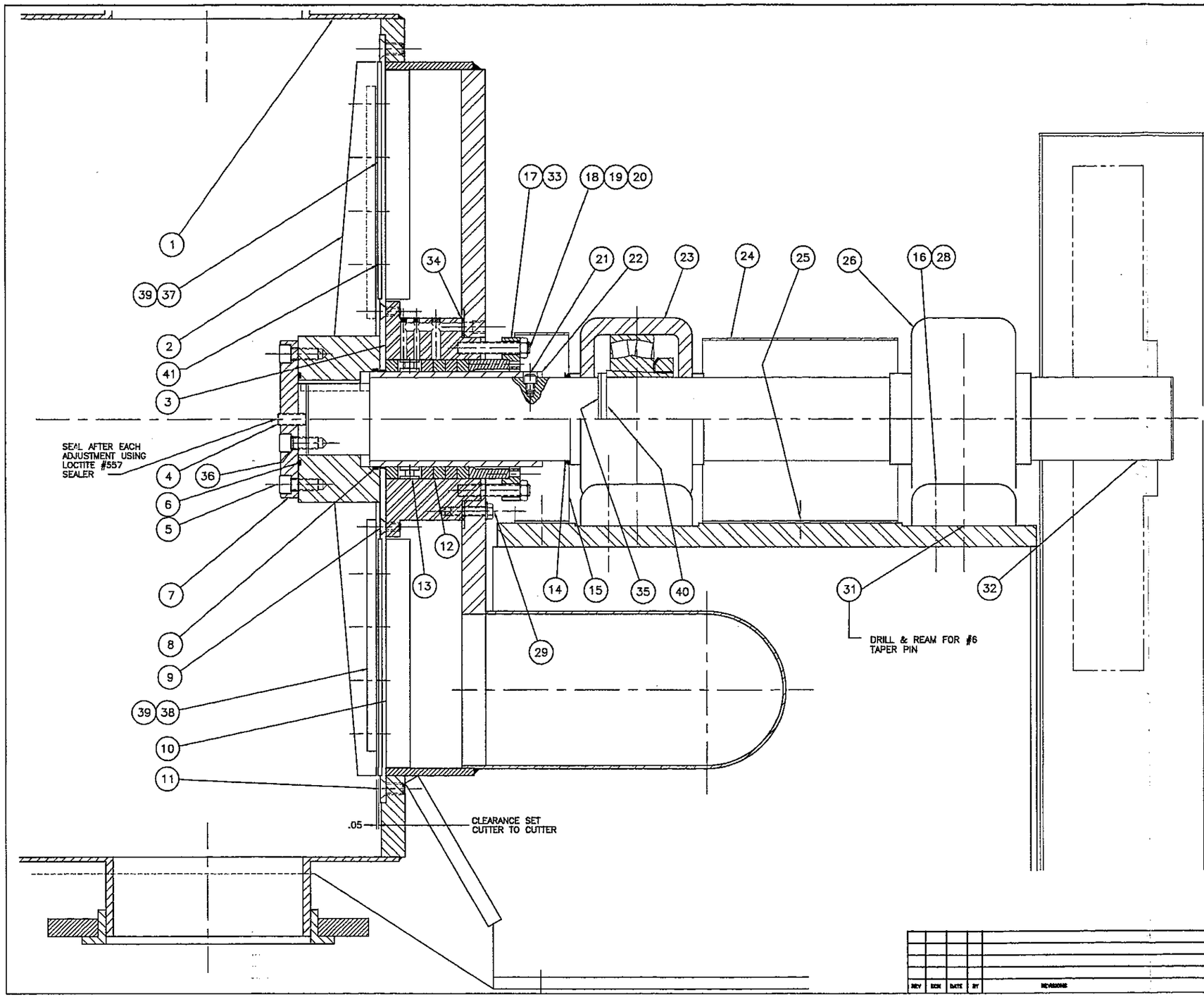

CAUTION
BEARINGS WITH TAPERED ADAPTERS MUST BE MOUNTED CAREFULLY IN ORDER TO AVOID A LOOSE SLEEVE OR REDUCED BEARING CLEARANCE. TO INSTALL A NEW SLEEVE OR BEARING, TIGHTEN THE NUT UNTIL .0018 TO .0025 CLEARANCE IS REMOVED. MEASURE BY FEELER GAGE INITAL BEARING CLEARANCE IN THE MOUNTED POSITION AND SUBTRACT THE CLEARANCE REMOVED.

FOR REFERENCE ONLY

ITEM NO.	DWG.NO.	QTY.	DESCRIPTION	REMARKS
41		30	5/16-18 X 1/2 LG. SOC. HD. SCR.	
40	BDBF2-0735	1	SPACER RING	
39		20	3/8-16 X 1/2 SOC. HD. SCR.	
38	BDBF2-0330	4	CUTTER	17-4PH
37	BDBF2-0441	6	CUTTER	17-4PH
36	O14	3	"O" RING 1/16 X 5/8 O.D.	
35		2	RET. RING TRUARC 5100-354	
34		2	GASKET 8.38 O.D. x 7.06 I.D. x 1/8	NEOPRENE
33	BCH3-0720	2	PUSHER	S.S.
32	BDBF2-0332	1	SHAFT	
31		4	#6 x 2 1/2 TAPER PINS W/NUTS	
30				
29		4	3/8-16 x 1 1/2 HEX HD. SCR.	
28		4	3/4 FLAT WASHERS	
27		4	3/4-10 x 3" HEX HD. BOLT	
26	3 1/2-042023	1	DODGE FREE PILLOW BLOCK & BRG.	
25		4	3/8-16 x 1/2 SOC. CAP. SCR.	
24	BCH3-0291	1	REAR GUARD	
23	3 1/2-042023	1	DODGE HELD PILLOW BLOCK & BRG.	
22	BCH3-0289	1	SLEEVE	
21		1	3/8-16 X 3/8 SOC. HD. SCR.	
20		4	1/2-13 HEX NUT	
19		2	1/2 FLAT WASHER	
18		2	STUD 1/2-13 X 3" - T.D.E. 1/2 - OP 1 1/2	
17	BCH3-0511	1	PACKING GLAND	
16		8	3/4-10 X 3 HEX HD SCR	
15	BCH3-0290	1	FRONT GUARD	
14	400900	1	FORSHEDA V RING	
13	BCH3-0288	1	LANTERN RING	
12	JM#26	1	PACKING 1/2 x 1/2 x 80 LG.	
11		12	1/2-13 x 3/4 FL. HD. MACH SCR.	
10		1	SCREEN PLATE	
9		6	3/8-16 x 1/2 FL. HD. MACH. SCR.	
8	2-242	1	"O" RING 1/8 X 4 1/4 O.D.	
7	BDBF3-0331	1	CAP	
6	2-246	1	"O" RING 1/8 X 4 3/4 O.D.	
5		5	1/2-13 x 1 SOC. HD. SCR.	
4		1	KEY 3/4 x 3/8 x 2.5 R.O.E.	
3	CDBF2-0278	1	STUFFING BOX	
2	DDBF2-1299	1	ROTOR (HARD)	
1		1	CASE	

THIS DRAWING IS THE PROPERTY OF FIBERPREP AND IS NOT TO BE COPIED OR REPRODUCED WITHOUT OUR EXPRESS PERMISSION AND MUST BE RETURNED UPON REQUEST.

TITLE
DIABOLO FINER II
ROTATING ASSEMBLY
HARD ROTOR

USED ON ASS'Y:
REPLACES:
DRAWN CVS | CHK'D | ORDER NO. | DATE 6/19/95 | SCALE 1/2=1

FIBERPREP
MYLES STANDISH IND.PK.
TAUNTON, MA 02780

DRAWING NO. DDBF2-3996 REV
SHEET 1 OF 1

REV	ECN	DATE	BY	REVISIONS