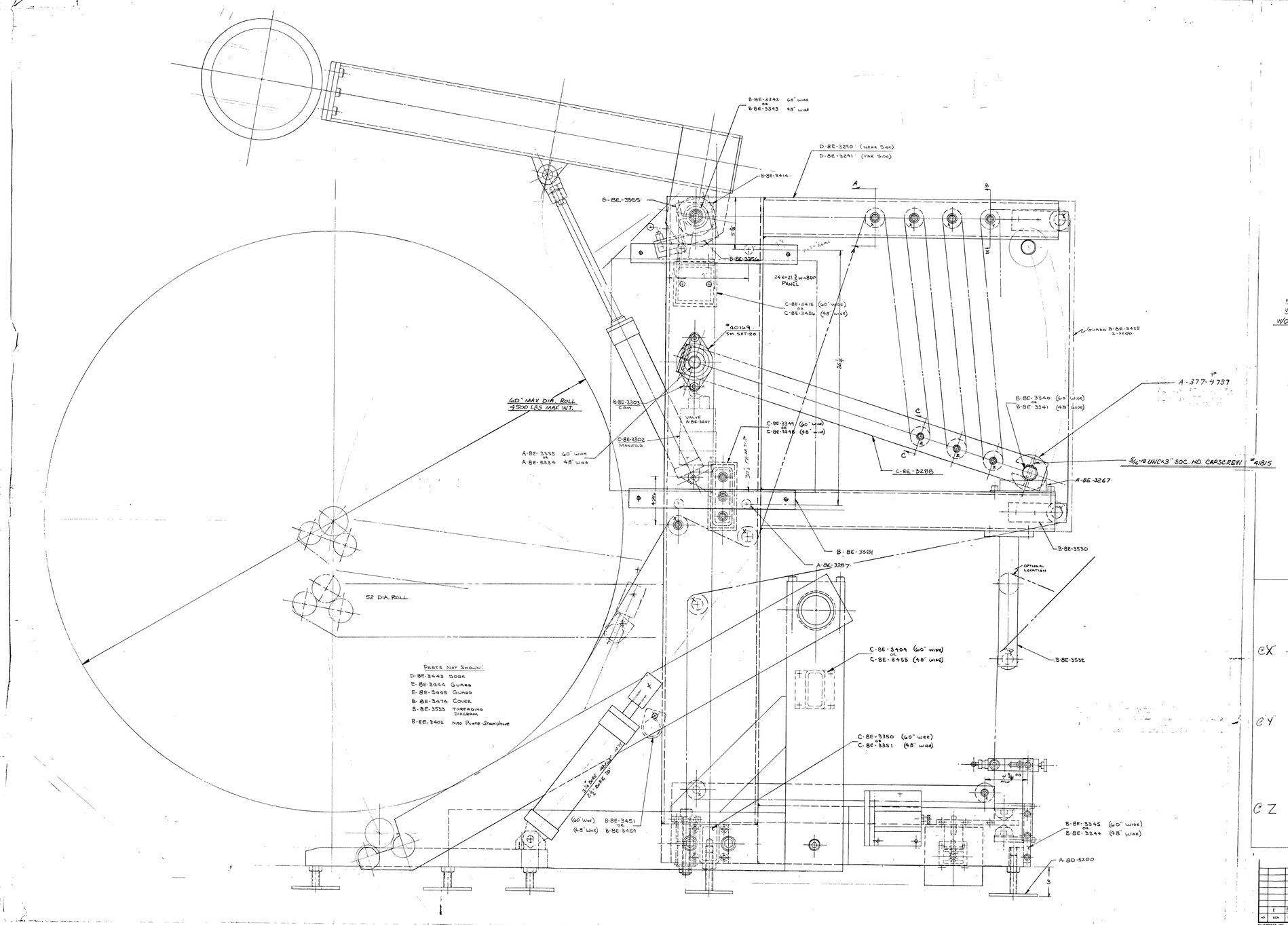

3 DIFFERENT ROLL ARRANGEMENTS

(1) SELECTS

20"	48"	60"
BE-1328-CP	BE-1329-CP	BE-1330-CP
BE-1320-CP	BE-1326-CP	BE-1327-CP
BE-1335-CP	BE-1334-CP	BE-1336-CP

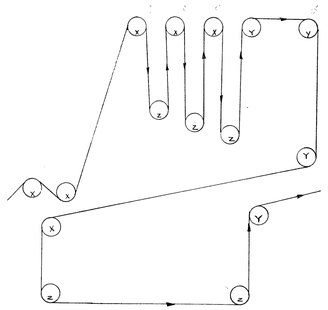

20" WIDE -ONLY- ROLL ASS'Y

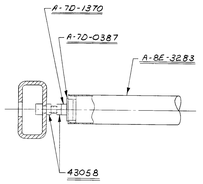

SECTION A-A TYP BOTH ENDS
W/ OPG EDGE GUIDE & DOWN 6 PLACES "X"
W/ OPG EDGE GUIDE OR DOWN 5 PLACES "X"
W/O OPG EDGE GUIDE & DOWN 4 PLACES "X"

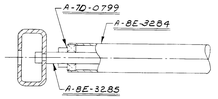

SECTION B-B TYP BOTH ENDS
2 PLACES @ "Y"

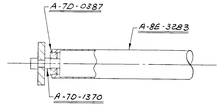

SECTION C-C TYP BOTH ENDS
3 PLACES @ "Z"

(2)

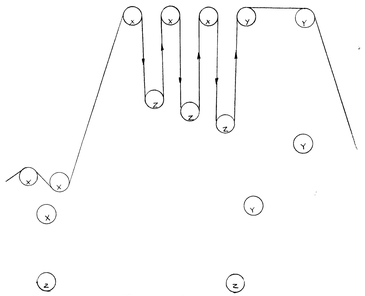

@ NO EDGE GUIDING

48" & 60" WIDE-ONLY- ROLL ASS'Y

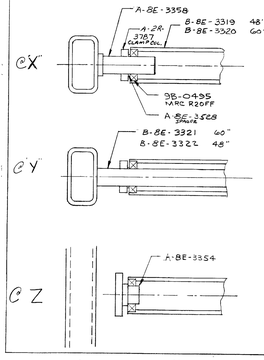

SURFACE DRIVEN UNWIND
20, 48, & 60" WIDE BASIC MACH.
COMMON PARTS

NO	ECN	REVISIONS	BY	DATE
1		Del Right Plate was Tied Into Side Frame, Del Top Panel & Tied Into Side Frame	LB	10-24-88

THIRD ANGLE PROJECTION

This drawing and all information contained hereon is the property of FMC Corporation. It shall not be used, nor shall a copy be reproduced in, used by others without express written permission from FMC

UNLESS OTHERWISE SPECIFIED
DIMENSIONS ARE IN INCHES
BREAK SHARP EDGES 0.005R
TOLERANCES
FRACTIONAL DIMENSIONS ± 1/64
DECIMAL DIMENSIONS ± .005
UNFINISHED CUTOFF, FLAME CUT, SAWED METAL DIMENSIONS ± 1/32
ANGLES ± 1/2°
SURFACE ROUGHNESS 125/ 0
PERPENDICULARITY ON FINISHED SURFACES - .005/1.000

PROTECTIVE FINISH:
MATERIAL:

FMC CORPORATION
AGRICULTURAL MACHINERY DIVISION
GREEN BAY, WISCONSIN

TITLE: SDU 20, 48 & 60 WD BASIC MACH.

DRAWN BY: LL WIEC DATE: 8-23-88
APPD: SCALE: .375 = 1.00
SIZE: E NO: BE-1323 REV: 1

BLUEPRINTS INC.