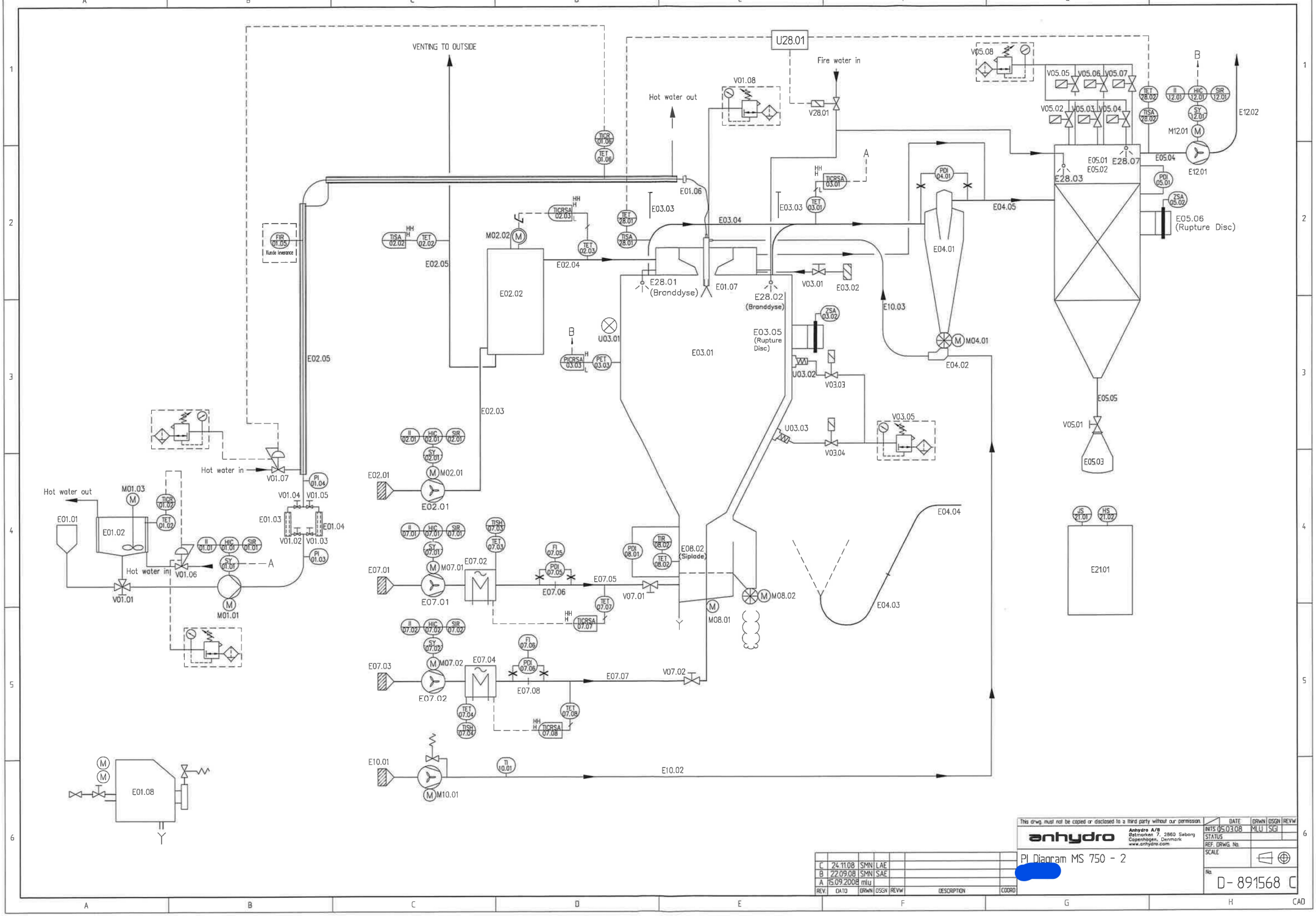

This drwg. must not be copied or disclosed to a third party without our permission.

anhydro

Anhydro A/S
Ølsmarken 7, 2860 Søborg
Copenhagen, Denmark
www.anhydro.com

REV.	DATO	DRWN	DSGN	REVW	DESCRIPTION	COORD
C	24.11.08	SMN	LAE			
B	22.09.08	SMN	SAE			
A	15.09.2008	mlu				

PI Diagram MS 750 - 2

[redacted]

	DATE	DRWN	DSGN	REVW
INITS	05.03.08	MLU	SGI	
STATUS				
REF. DRWG. No.				
SCALE				

No. D-891568 C

CAD