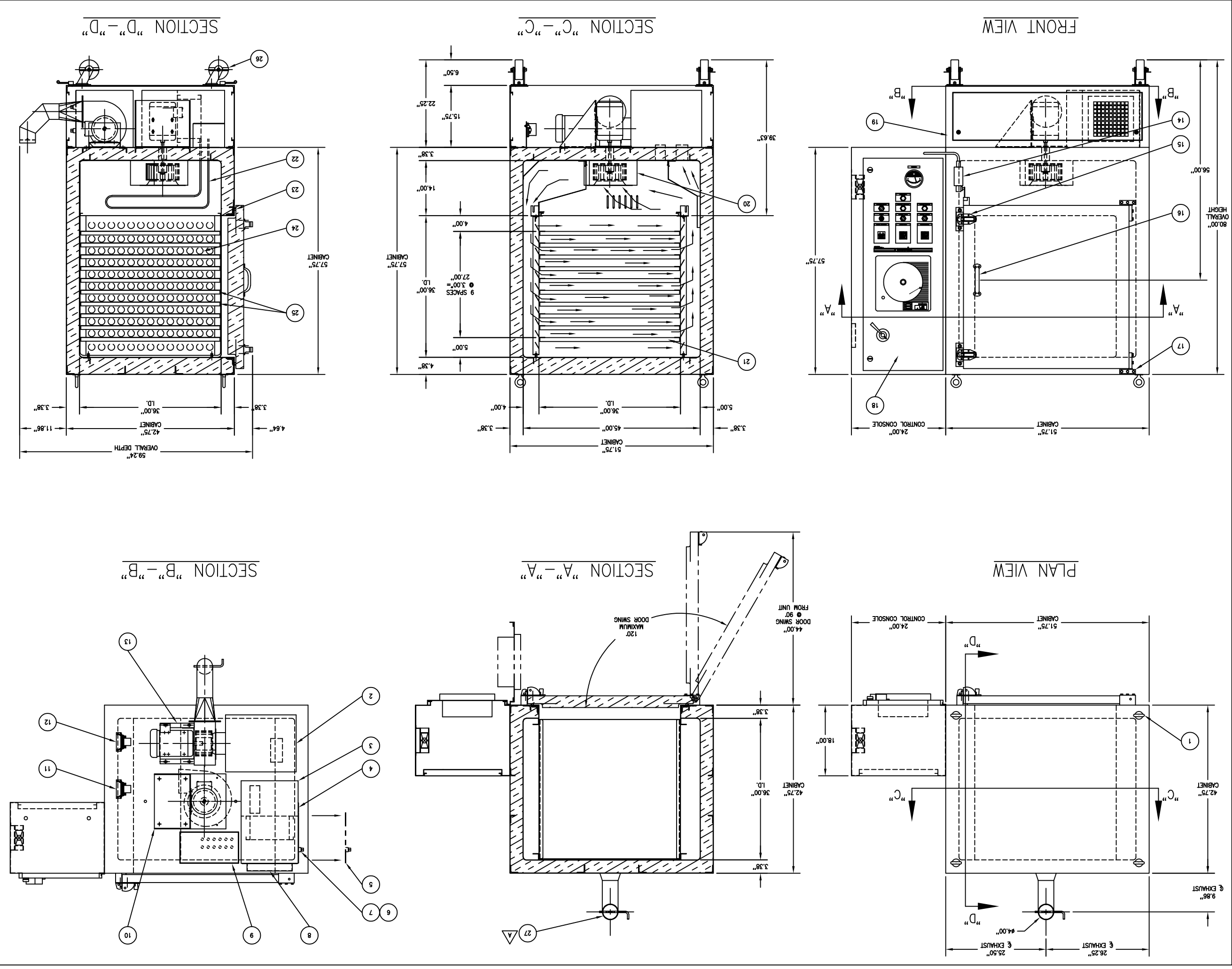

TOLERANCE: +/-.25"			
REV	DESCRIPTION	BY	DATE
A	ADDED ITEM 27	RLS	02.03.04
--	--	--	--

NOTICE:
THIS DRAWING IS THE PROPERTY OF LUNAIRE LIMITED, WILLIAMSPORT, PA. AND IS LOANED SUBJECT TO THE CONDITION THAT IT SHALL NOT BE REPRODUCED, COPIED, LOANED, OR SUBMITTED TO OUTSIDE PARTIES FOR EXAMINATION WITHOUT OUR CONSENT.

Lunaire Limited
An SPX Company

GRUENEBERG • LUNAIRE • TENNEY • VISTA

CUSTOMER
ABRIKA PHARMACEUTICALS
2121 REACH ROAD, WILLIAMSPORT, PA., U.S.A.

PLAN. NO. 1361		SCALE 1/12"=1"	SHEET 1 OF 1
QUOTE NO. 3998-4		DWG NO D001	REV A
DWN	DATE	TITLE	
RLS	12.08.03	DRYER CONFIGURATION	
APP	DATE	MODEL	JOB NO 30472
		L18H27.0SS	

MATERIALS OF CONSTRUCTION:
INTERIOR: STAINLESS STEEL TYPE 304L WITH A 2B FINISH, FULLY WELDED LINER, SEE TYPICAL WELDED LINER DETAIL ON DRAWING D003. LINER SUPPLIED WITH A 0.750" INSIDE CORNER RADIUS TO SIMPLIFY CLEANING.
EXTERIOR: STAINLESS STEEL TYPE 304 WITH A #4 POLISHED FINISH.
INSULATION: 3" THICK OF NON-ASBESTOS, NON-SETTLING INSULATION, FIBREX #601 FRX THERMAPANEL.

OPERATING PARAMETERS:
OPERATING TEMPERATURE: 50°C–60°C (122F–140°F).
TEMPERATURE UNIFORMITY: ±2°C @ 60°C .
CIRCULATION AIRFLOW: APPROXIMATELY 1600 CFM @ 1.00" SP @ 70°F
SET BLOWER RPM AT 2470
EXHAUST AIRFLOW: APPROXIMATELY 60 SCFM @ 2.2" SP @ 70°F
CAPACITY: 27.0 CUBIC FEET WORK CHAMBER
SHIPPING WEIGHT: APPROXIMATELY 2500 POUNDS

UTILITIES:
ELECTRICAL: 230 VOLTS, 3 PHASE, 60 HERTZ, 18 TOTAL KW, 60 FULL LOAD AMPS

CLASSIFICATION:
NFPA 86 CLASS "B" OVENS ARE HEAT UTILIZATION EQUIPMENT OPERATING AT APPROXIMATELY ATMOSPHERIC PRESSURE WHEREIN THERE ARE NO FLAMMABLE VOLATILES OR COMBUSTIBLE MATERIAL BEING HEATED IN THE OVEN.

ITEM	QTY	DESCRIPTION
1	4	LUG, LIFTING – REMOVABLE
2	1	EXHAUST TRANSITION BOX
3	1	INTAKE FILTER BOX WITH A 12" HIGH X 12" WIDE X 5 7/8" THICK HEPA FILTER, 99.97% EFFICIENCY @ 0.3 MICRONS
4	1	D.O.P. PORT: INTAKE SCAN: 1" X 8" SLOT
5	1	HEPA FILTER BOX ACCESS PANEL
6	1	D.O.P. PORT: INTAKE INPUT: 1/2" FPT CONNECTION
7	1	D.O.P. PORT: INTAKE 100%: 1/2" FPT CONNECTION
8	1	PREFILTER: 12" HIGH X 12" WIDE X 2" THICK, 40% EFFICIENCY
9	1	HEATER AND ELECTRICAL JUNCTION BOX
10	1	AIR CIRCULATION SYSTEM: DIRECT DRIVE WITH A 2 HORSEPOWER, 230 VOLTS, 3 PHASE, 60 HERTZ, 3450 RPM, TEFC MOTOR, FRAME SIZE: 56
11	1	CIRCULATION AIRFLOW SENSOR SWITCH
12	1	EXHAUST AIRFLOW SENSOR SWITCH
13	1	EXHAUST PACKAGE: APPROXIMATELY 60 CFM @ 2.2" SP WITH A 1 HORSEPOWER, 230 VOLTS, 3 PHASE, 60 HERTZ, 3450 RPM, TEFC MOTOR, FRAME SIZE: 56, (NOTE: PACKAGE COMPLETE WITH A NON-SPARKING ALUMINUM BLOWER HOUSING AND INLET RING.
14	1	DOOR SWITCH
15	2	CHROME PLATED BRIXON SAFETY LATCHES (SPARK PROOF)
16	1	8" CHROME PULL HANDLE
17	1	STAINLESS STEEL ADJUSTABLE PIVOT HINGE ASSEMBLY
18	1	CONTROL CONSOLE ASSEMBLY (SEE DRAWING D002)
19	1	BOTTOM ENCLOSURE WITH A REMOVABLE ACCESS PANEL ON ALL 4 SIDES
20	1	CIRCULATION BLOWER: 8 3/8" DIAMETER X 4" THICK WITH A STAINLESS STEEL WHEEL AND A SPARKPROOF ALUMINUM BLOWER HOUSING AND INLET RING
21	10	LOADING TRAYS (SEE DRAWING D003)
22	6	HEATER – 3000 WATT
23	1	SILICONE "P" GASKET, 1/2" BULB
24	2	SEMI-PIERCED DUCT WALL ASSEMBLY
25	20	SHELF SLIDE
26	4	SWIVEL CASTER: 5" DIAMETER X 2" FACE WITH A STAINLESS STEEL YOKE, A PHENOLIC WHEEL, A WHEEL BRAKE AND A 2 POSITION SWIVEL LOCK
27	1	DAMPER