WESTFALIA SEPARATOR

INSTRUCTION MANUAL AND PARTS LIST

No. 1167 - 9001 - 040

WESTFALIA

Milk Separator

Model SAMM 15 006

with Self-Cleaning Bowl

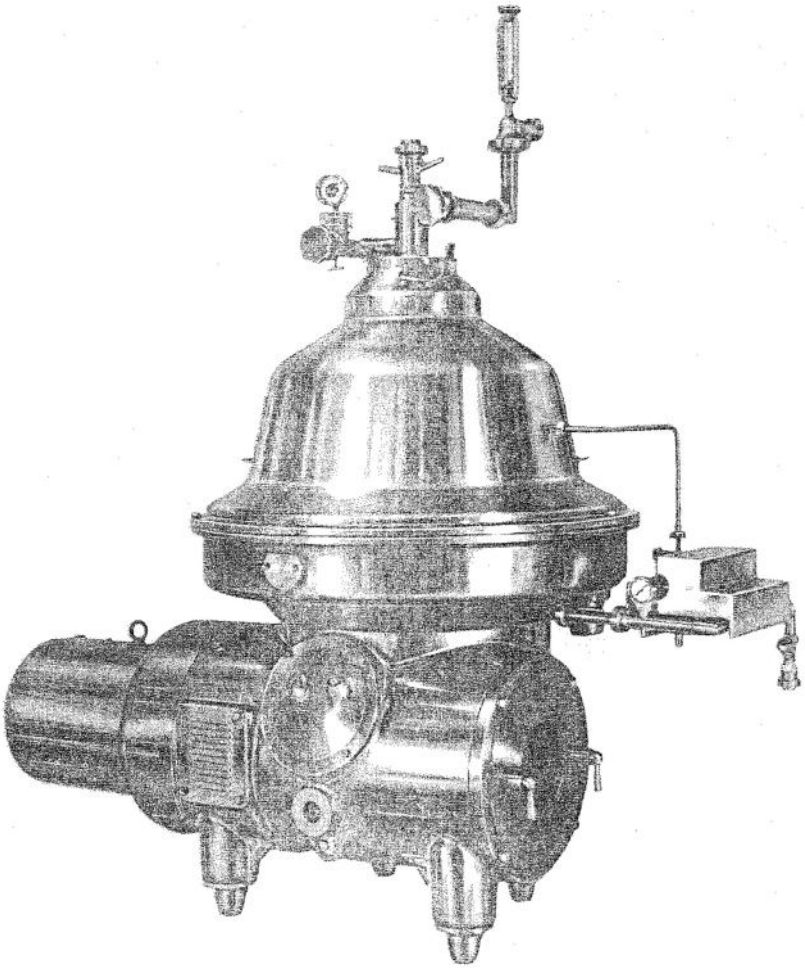

WESTFALIA SEPARATOR AG./4740 OELDE 1 (W.-GERMANY)

CABLES: WESTFALIA OELDE · PHONE: (02522) 771 · TELEX: 89474

No. 4669/973 engl.

Printed in Germany

IMPORTANT HINTS

The WESTFALIA Separator is a high-speed centrifuge which works reliably provided that it is operated and looked after in accordance with our Operating Instructions. Please read carefully through the directions so that you will be able to operate and service your separator in such a manner as to extract from it the greatest possible efficiency.

We recommend in your own interest to have your separator inspected by WESTFALIA service engineers at regular intervals. Such inspections will keep your separator working reliably and prevent undesirable shut-downs.

1) Before each start-up check if

   lock rings are tightened securely ("0" marks must be aligned),

   hood and centripetal pump are fastened tightly,

   oil level is slightly above middle of sight glass,

   brakes are released. (Since the fluid clutch is not protected against overload, applied brakes can cause overheating of the oil which again can lead to severe damage of the clutch).

2) The cold conductor type temperature feelers built-in for motor protection have to be connected to an appropriate tripping device. External voltage higher than 2.5 volts must not be applied to the terminals of the temperature feelers. When testing for continuity, do NOT use a test lamp but only a conventional ohmmeter.

3) Feed liquid to separator only when bowl is closed which is accomplished by feeding operating water.

4) If the bowl reaches its rated speed (as per name-plate of separator) in less than 8 minutes, the motor will pull too high a starting current. This indicates that the clutch contains too much oil.

5) Make first oil change after 3 to 4 weeks. When gear parts are broken in, change oil every 2 to 3 months. Use only the type of oil specified on page 2/1.

6) Clean gear chamber every time when making oil change.

7) Check regularly for water in oil. To do this, unscrew oil drain screw and allow a small amount of oil to drain.

8) For reasons of safety be sure to replace ball bearings of worm spindle and worm wheel shaft and the oil in the fluid clutch every 5,000 working hours.

9) Do NOT loosen any part of the separator or of the feed and discharge connections before the bowl has stopped completely!

Note that bowl has not stopped before revolution indicator disc 32c (fig. 13/1) has ceased rotating.

10) Dismantle the bowl once a month for inspection:
Thoroughly clean and wipe dry contact surfaces and threads of bowl bottom and lock ring and apply a thin film of lubricating paste furnished with the separator, to prevent galling of the threads.

11) When dismantling the bowl be sure to place bowl parts on a rubber mat or wooden surface, never on the stone floor.

12) After removing the bowl bottom, place splash cover 406 (fig.20) over worm spindle to prevent wash liquid from seeping into the gear chamber.
Do NOT flush inside of upper section of frame with water hose; wash by hand.

13) Before installing bowl bottom, oil upper part of spindle (thread, cone, and cylindrical guide surface for spindle cap). It must be possible to move the spindle cap easily up and down on the spindle. Then clean and wipe dry the conical part of the spindle with a smooth rag. Also, clean the inside of the bowl hub carefully to assure proper fitting.

14) When assembling the bowl, strictly adhere to the instructions given in sect. 4 to avoid undue unbalance. IMPORTANT: Before starting the bowl be sure it is completely assembled.

15) When pressure in disc stack has slackened, add spare disc (see sect. 4.1, no.18).

16) Never use blow-torch on bowl or expose bowl to heat of open flame!

C O N T E N T S

Page

List of Parts

Vertical Section of the Separator

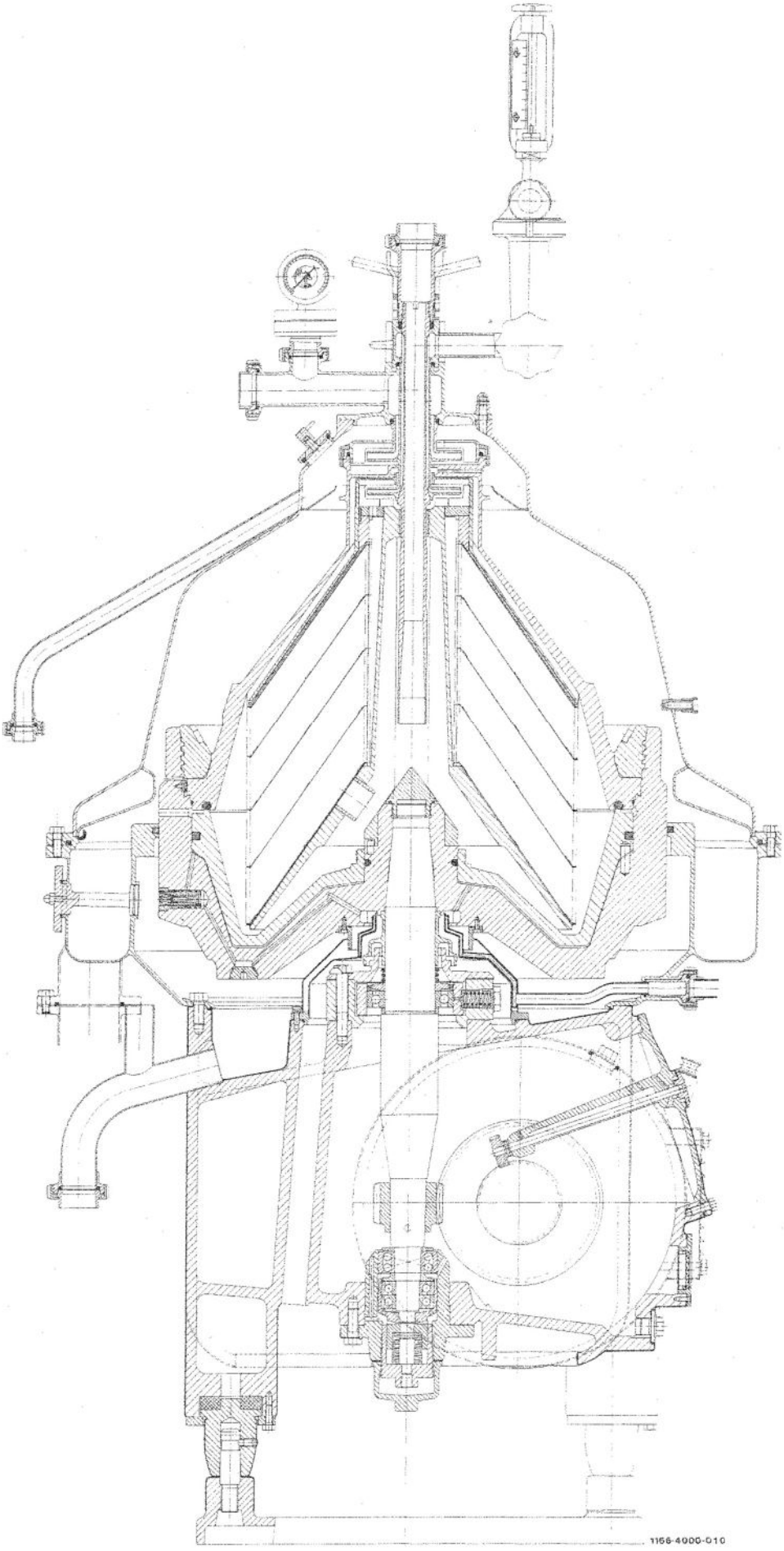

1.2. Installation

When installing the separator make sure that sufficient room is available (at least 15") for mounting and removing the motor and for removing the horizontal drive shaft which is to be pulled out towards the brake side.

Do NOT install a shut-off device in the line which will be connected to the operating-water discharge line 5a-c (fig. 13/1). The line should have 2" I.D. It should have sufficient fall and must NOT be too long to allow the discharging operating-water to flow off freely, since otherwise the water will rise and enter the upper section of the frame, resulting in slowing-down of the bowl.

The supply line to the operating-water connection should have 1" I.D., the operating-water pressure should be approx. 21 psi.

For mounting and removing the bowl parts, a 500 kg hoist (minimum lifting height 2,8 m; see installation plan) will be indispensable. On request a WESTFALIA Swing Crane can be supplied.

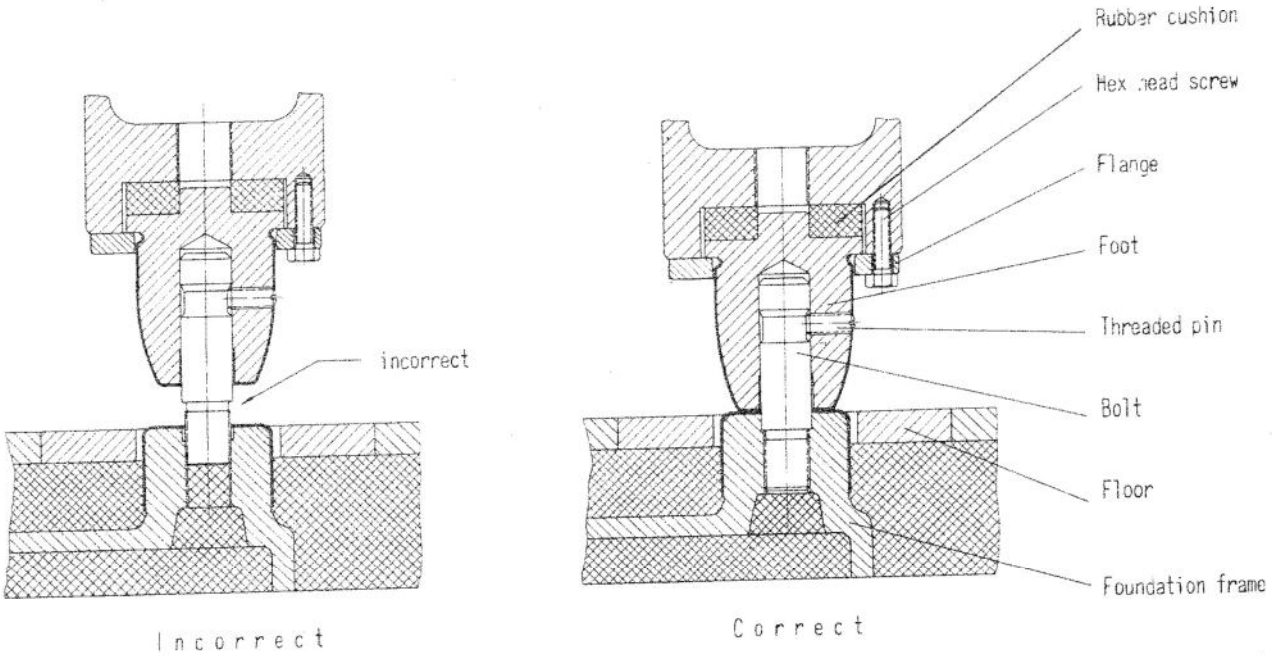

Fig. 1/2

Screw bolts into the four mounting blocks of foundation frame; make sure they are tight. Embed the foundation frame in the floor so that the mounting blocks of the frame protrude above the plane of the floor by about 5 mm = 0.2". Fill up the space below the foundation frame with concrete. Make sure that the mounting blocks are absolutely level and grout the frame with concrete, inside and outside. To accelerate setting of cement, commercial rapid binding agents may be used.

By means of flanges and hex head screws fasten feet with fitted-on rubber cushions to separator frame. Then lift the separator frame with its feet onto the bolts of the foundation frame and tighten the threaded pins with a wrench.

2. Lubrication

2.1. Lubricating the clarifier

All bearings and gear parts of the clarifier are splash lubricated from a central oil bath.

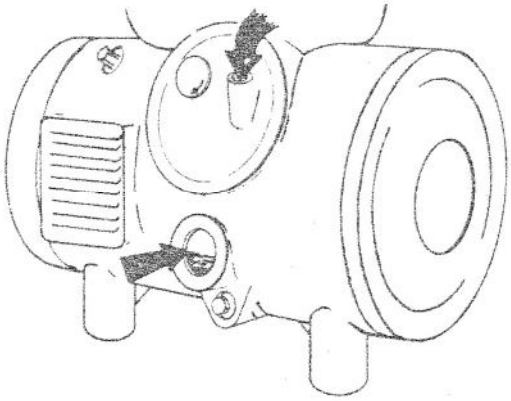

Fig. 2/1

Before initial start-up of the clarifier fill the gear chamber with oil until oil level is slightly above middle of sight glass. The clarifier requires about 5,5 litres of well refined lubricating oil with mild acting non-corrosive EP additives, of the viscosity range

from 15-17E = 115-130 cSt at 50°C.

We strongly recommend to use the oil with the WESTFALIA designation M91 on orange label. For the order number refer to page 20/1.

If the recommended EP oil is not available, use only a well refined lubricating oil in the viscosity range stated above, adding 3% of Molykote (high pressure additive M55, fluid).

The oil level must never be allowed to sink below middle of sight glass be sure to add oil, whenever necessary.

Make first oil change after 3 to 4 weeks. When gear parts are broken in, make regular oil change every 2 to 3 months.

When making oil change, remove revolution indicator 32 a-h (fig. 13/1) and clean gear chamber thoroughly with kerosene. All metal particles should carefully be removed from walls and corners. Do NOT use fluffy cleaning rags or cotton waste. Since in the course of time a dirt rim settles on the inside of the sight glass which could be mistaken for the oil level, the sight glass has to be removed and cleaned as well.

Check from time to time if oil contains water. To do this, remove oil drain screw and allow a small amount of oil to drain.

2.2. Lubrication of the motor bearings

The motor bearings are of the continuous lubrication type. They have been packed at the factory with lithium-saponified grease and need not be repacked until several years later provided that the machine works under normal conditions. It is,however, recommended to remove the bearings once a year for cleaning. For this purpose, the motor will have to be removed (see 8.4.1) and dismantled. Apart from the bearings the windings and the other parts should be cleaned as well. For thorough cleaning of the bearings use cleaning benzine or benzene. For repacking the bearings be sure to use only lithium-saponified ball bearing grease having a pour point of at least 180°C, e.g. Shell Alvania II or III.

To prevent the bearings from overheating, the grease chambers should only be half packed whereas the cavities between the rolling elements and the tracks should be completely filled up with grease. The shaft entries in the endshields should also be covered with grease.

3. Motor Connection

3.1. Threephase AC motor 22 kW

The separator is driven by a totally enclosed threephase AC flange-type motor via a fluid clutch. This motor is started by means of an automatic star-delta switch according to wiring diagram 8134-0002-0381. Switching over from star to delta takes place after 3 - 4 seconds

Motor protection is ensured by PTC resistor type temperature feelers incorporated in the winding of the motor. These PTC resistor type temperature feelers have to be connected to an appropriate tripping device. External voltage higher than 2.5 volts must not be applied to the terminals of the temperature feelers. When testing for continuity, do NOT use a test lamp but only a conventional ohmmeter.

The starting current of the motor can reach 1.7 times the value of the rated current. Therefore, dimensioning of switches, wiring and fuses should be based upon the starting current and NOT on the rated current.

50 Cycles Voltage V	Rated current Amps	Minimum Section of lead-in wires mm^2	Rated current of fuses Amps
220	73,5	35	160
380	42,5	16	80

3.2. Direction of rotation of the bowl

IMPORTANT: The bowl must turn in clockwise direction when looked at from above. The direction of rotation of the bowl is correct when revolution indicator disc 32c (fig. 13/1) rotates in clockwise direction. The direction of rotation is reversed by interchanging two lead-in-wires.

3.3. Speed and starting time of the bowl

The bowl speed is 4500 rpm and can be checked by counting the rotations of the revolution indicator disc 32c (fig. 13/1). The bowl speed is correct when - after start-up of the bowl - the revolution indicator disc makes 63 - 64 rpm, at a motor speed of 1470 rpm.

A deviation of the bowl speed up to 3% is permissible, provided that the maximum discharge pressure of the centripetal pump is not fully utilized.

Starting of the bowl takes about 10 minutes.

Make sure that the bowl reaches its rated speed (as per name-plate of the separator) within its starting time and that this speed is maintained during operation (see 10.1.1 - 10.1.3).

IMPORTANT: More than two successive starts are not permitted. Should the case arise that a third start becomes necessary, it may only be effected after about 45 - 60 minutes, since otherwise the oil temperature in the fluid clutch will rise excessively.

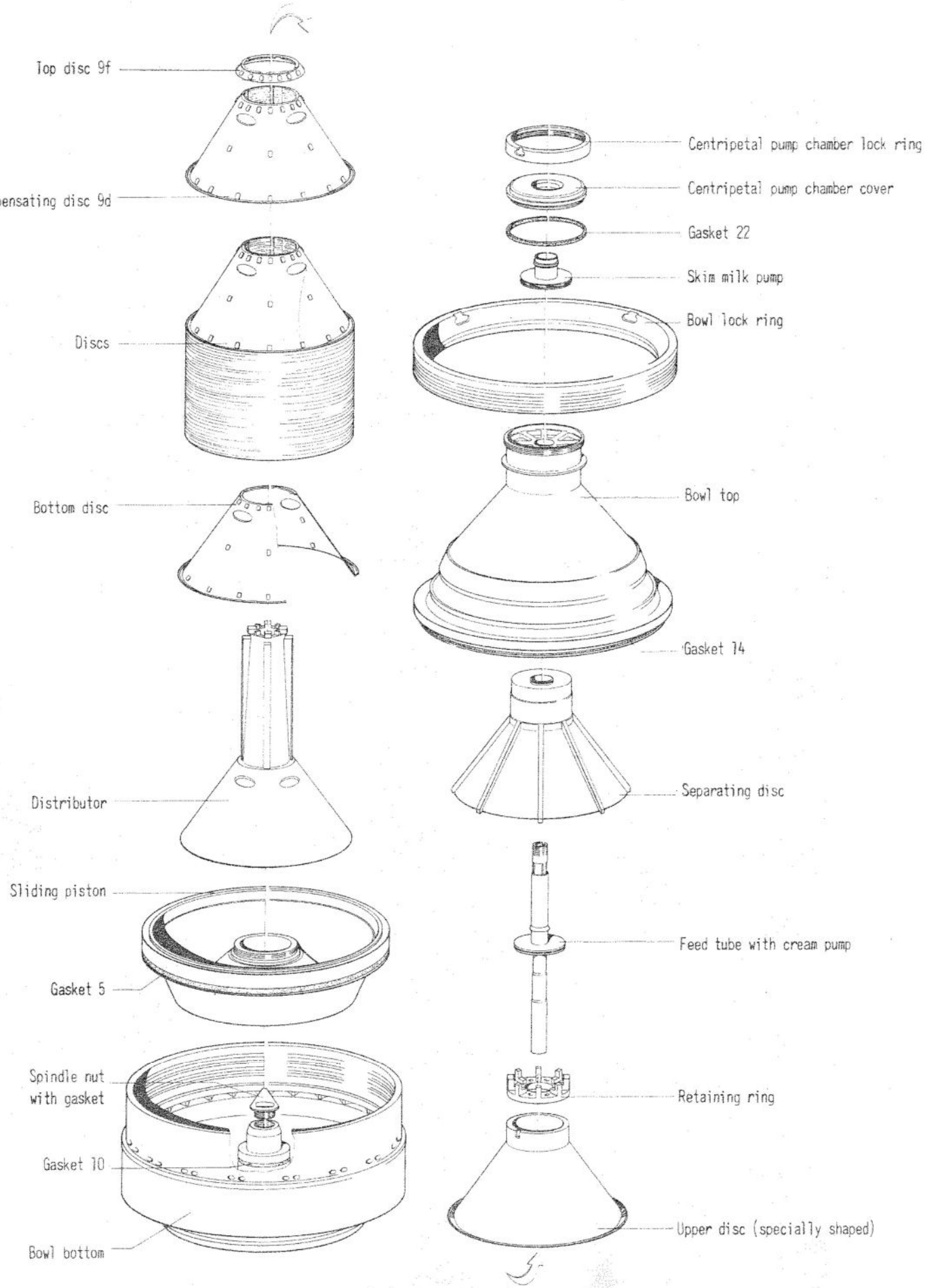

Fig.4/1

Component Parts of the Bowl in the Order of Assembly.

4. Bowl and Feed and Discharge Connections

4.1. Assembly of the bowl

(for tools refer to page 20/2)

Before assembling the bowl, make sure that all contact surfaces of the bowl parts are clean.

When assembling the bowl, make sure that the "0" marks of all bowl parts are in line.

If the plant has several centrifuges, be careful not to interchange parts of different bowls, since each bowl has been balanced individually. The main parts of the bowl are marked with the last three digits of the Serial-Number of the separator.

1) Oil the upper part of the worm spindle (thread, cone and cylindrical guide surface for spindle cap). It must be possible to move the spindle cap easily up and down on the spindle. Then clean and wipe dry the conical part of the spindle with a smooth rag. Carefully clean the inside of the bowl hub as well to assure proper fitting.

2) Use jack 436 to place bowl bottom onto spindle.

3) Insert gasket in spindle nut.

4) Tightly screw on spindle nut (left-hand thread), using a wrench.

5) Fit gasket 10 into hub of bowl bottom.

6) Thoroughly clean groove in sliding piston for gasket 5 and apply a thin film of grease.

   In case the gasket is new and a bit too tight, stretch it out equally all the way around until its perimeter is almost equal to the perimeter of the groove in the sliding piston.

   Then put the gasket into the groove of the sliding piston. Stick a screwdriver under the gasket and run it around the sliding piston two or three times (see fig. 4/2). Then tap the gasket back into its groove with a rubber hammer.

   The gasket is now equally stretched all the way around and assures best sealing effect during operation.

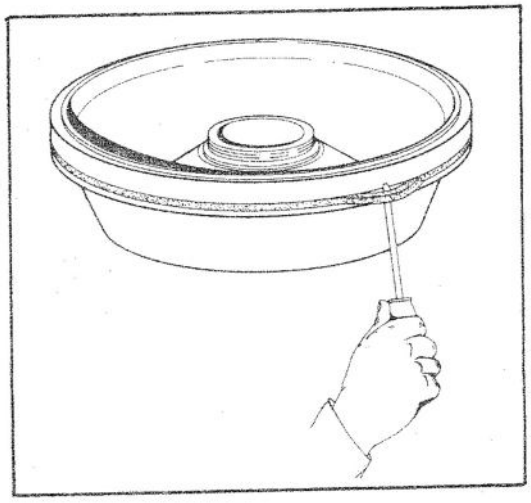

Fig. 4/2

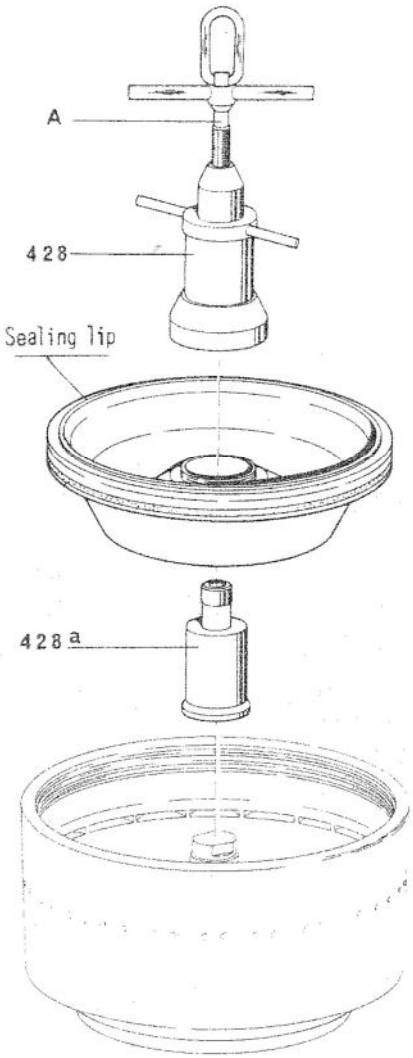

Fig. 4/3a

7) Lightly grease contact surfaces of sliding piston and of bowl bottom with the special lubricating paste provided.
Place pressure piece 428a onto hub of bowl bottom in such a manner that grooves in pressure piece fit over arresting pins of bowl bottom. Then install sliding piston with the aid of jack 428. The "O" marks must be aligned.
By turning threaded spindle "A" in counter-clockwise direction, lower sliding piston slowly until arresting pins of bowl bottom catch into grooves of sliding piston.

IMPORTANT! Be careful not to damage sealing lip of sliding piston!

8) Install distributor into bowl bottom, using mounting tool 434. Make sure that the three arresting pins of bowl bottom fit into recesses of distributor. The "O" marks of both parts must be aligned.

9) Stack discs on neck of distributor in numerical order, beginning with no. 1.

10) Place on compensating disc 9d (with thicker spacers on bottom) and then top disc 9f.

IMPORTANT! If a spare disc has to be added in order to obtain the necessary pressure in the disc set, be sure to place it below compensating disc 9d. Do NOT place it between compensating disc and top disc 9f.

11) Place on upper disc (specially shaped).

12) Put retaining ring D (fig. 4/3b), with its ribs pointing upwards, onto upper disc. "O" mark of retaining ring must be as close as possible to "O" mark of distributor (left from it).

13) To facilitate tightening of bowl lock ring, compress disc set with compressing device 430 in the following manner (see fig. 4/3b):

a) Screw bolt A <u>all the way down</u> into distributor neck.

b) Place pressure piece C onto upper disc in such a position that "O" mark on distributor neck can be seen through lateral opening of pressure piece.

c) Grease thread of bolt A. Then screw hex nut B on bolt and tighten it with ratchet wrench 421 until retaining ring D can be turned in <u>counter-clockwise</u> direction.

d) Turn retaining ring in <u>counter-clockwise</u> direction until it hits stop. "O" marks of retaining ring and of distributor neck must be in line. The disc set will then remain compressed.

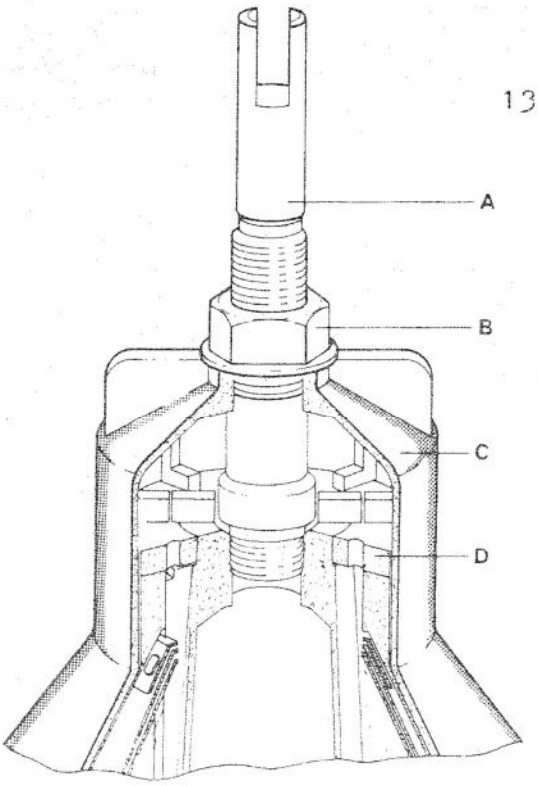

Fig. 4/3b
Disc stack compressing device placed on upper disc

14) Remove disc stack compressing device as follows (see fig. 4/3b):

a) Loosen hexagon nut B with ratchet wrench.

b) Unscrew bolt A (put handle of ratchet wrench in slit of bolt) and remove it together with pressure piece C and hexagon nut B

15) Install feed tube with fitted-on cream pump in distributor neck.

16) Place on separating disc. Make sure that the "O" marks of separating disc and bowl bottom are aligned.

17) By means of jack 427 place bowl top with inserted gaskets 14 and 15 onto bowl bottom.
Make sure that the arresting piece of bowl bottom fits into groove of bowl top. The "O" marks of both parts must be in line.

18) Thoroughly clean and wipe dry threaded areas on bowl bottom and bowl lock ring as well as contact surfaces and apply a thin film of special grease to prevent galling.

Use annular wrench 425 and lifting device 431 to place bowl lock ring onto bowl bottom (see fig. 4/6a). Then screw in lock ring (left-hand thread) with annular wrench until "O" marks on lock ring and on bowl bottom will be about 10 - 15 cm apart. Final tightening for "O" mark alignment will have to be done by hitting wrench handle with mallet 405. Only a few blows with the mallet on the wrench handle will be sufficient to align the parts Do NOT slip a pipe over wrench handle to obtain leverage!

If the disc pressure has slackened so that tightening the lock ring with annular wrench can be done by hand, then a spare disc has to be added (see no. 10).

19) Mount skim milk pump.

20) Insert gasket in centripetal pump chamber cover.

21) Place on centripetal pump chamber cover. Watch for proper location!

22) Tighten pump chamber lock ring (left-hand thread), using annular wrench 426. Tighten it thoroughly by hitting wrench handle with mallet.

23) Check if bowl can be turned by hand.

4.2. Assembly of the feed and discharge connections

1) By means of cap nuts 41h fasten lifting device 435 (fig. 20) to hood. With the aid of hoist place hood onto sediment collector in such a manner that "O" mark on sediment collector is in line with "O" mark on hood. Connect flush lines. Fasten hood to sediment collector by means of hex head screws 41b.

2) Put skim milk discharge with inserted gasket 2d (fig. 18/1) onto hood and fasten it with cap nuts 41h.

3) Install cream discharge with inserted gaskets 7a,b,d into skim milk discharge.

4) Move locking device of handle connection piece upwards. Screw on handle connection piece (left-hand thread) and tighten it firmly. While tightening block feed tube with wrench 429 (fig. 20). Then turn locking device until it snaps in. Handle connection piece is now properly locked.

5) Connect feed and discharge lines.

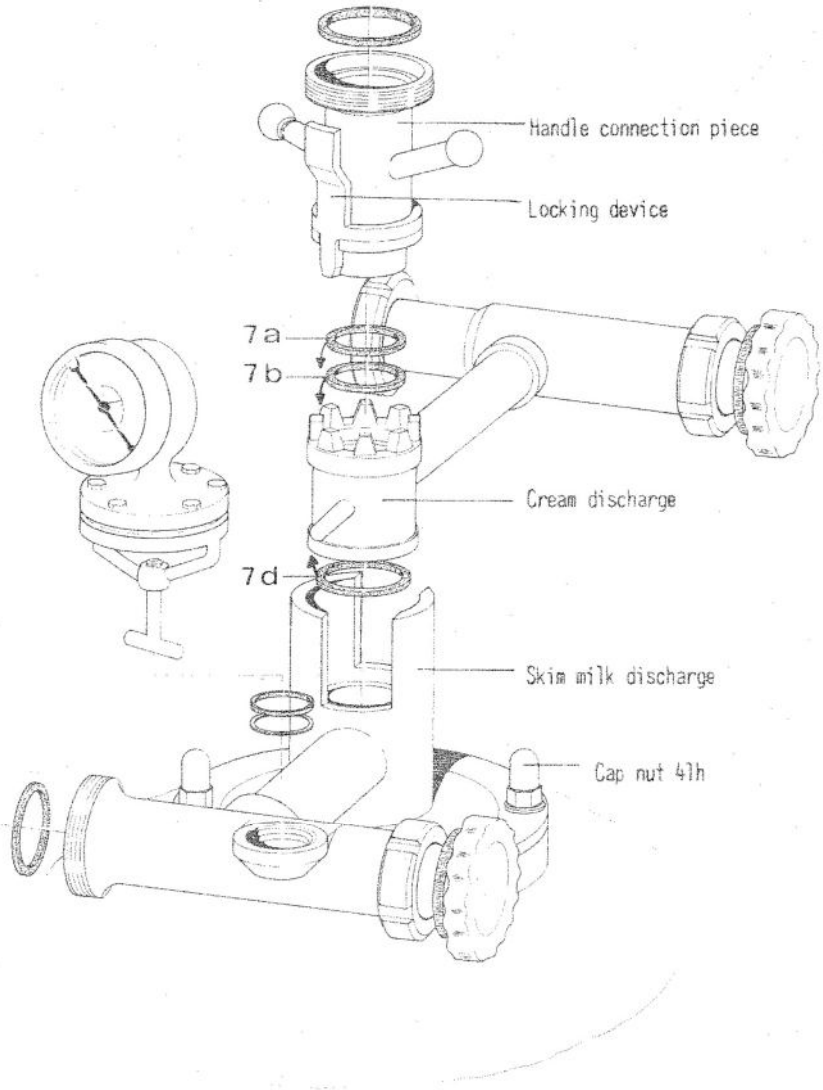

Fig. 4/5

4.3. Removing the feed and discharge connections
Dismantling the bowl

IMPORTANT: To avoid accidents, do NOT loosen any part of the separator or of the feed and discharge connections before the bowl has come to a complete stop! Bowl has not stopped before revolution indicator disc 32c (fig. 13/1) has ceased rotating.

For dismantling proceed in reverse order of assembly (see sect. 4.1 and 4.2) and bear in mind the following:

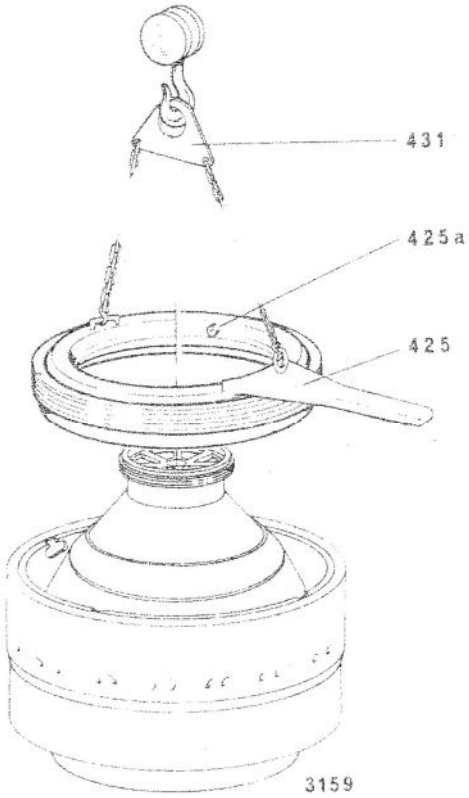

Fig. 4/6a

Handle bowl parts with care.

Be sure to replace damaged gaskets.

Before opening the bowl release the brakes by turning the two handles in clockwise direction.

Unscrew bowl lock ring with annular wrench 425. Loosen the ring (left-hand thread) by hitting the wrench handle with mallet 405.

IMPORTANT: If the bowl lock ring is jammed tight, unscrewing of the ring can be facilitated by warming up the upper rim of the bowl bottom with steam or hot water.

Fig. 4/6a

Lock annular wrench 425 by screwing hex head screw 425a into groove of bowl lock ring. Then lift up annular wrench and lock ring with the aid of lifting device 431.

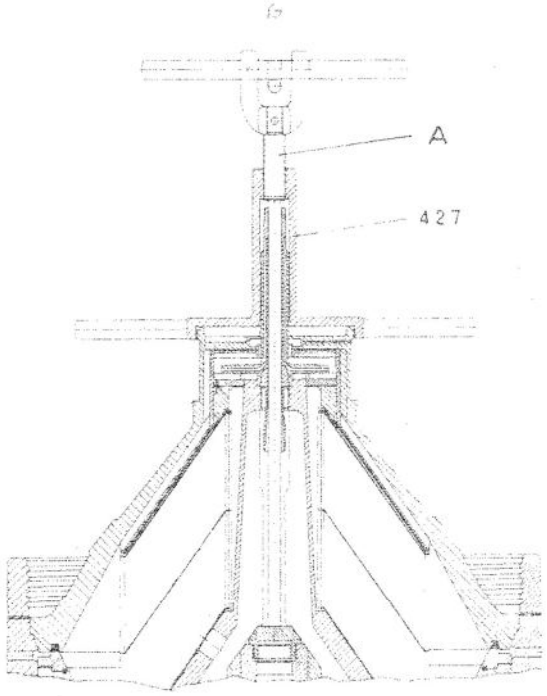

Fig. 4/6b

Fig. 4/6b

Screw jack 427 onto bowl top. By turning threaded spindle A of jack in clockwise direction press bowl top off the bowl bottom. Then lift it up with a hoist.

If the separating disc is stuck in the bowl top, hammer with a copper or a light-metal hammer on the bowl top until the separating disc becomes loose. Do NOT let the disc drop on the floor.
Should it be impossible to detach the separating disc in this manner, then proceed as follows: Place bowl top on a wooden surface. Pass a brass mandrel through outer holes in bowl top and place it on outer edge of separating disc. By lightly hammering the mandrel, the separating disc will come off.
Do NOT place the mandrel on inner edge of separating disc.

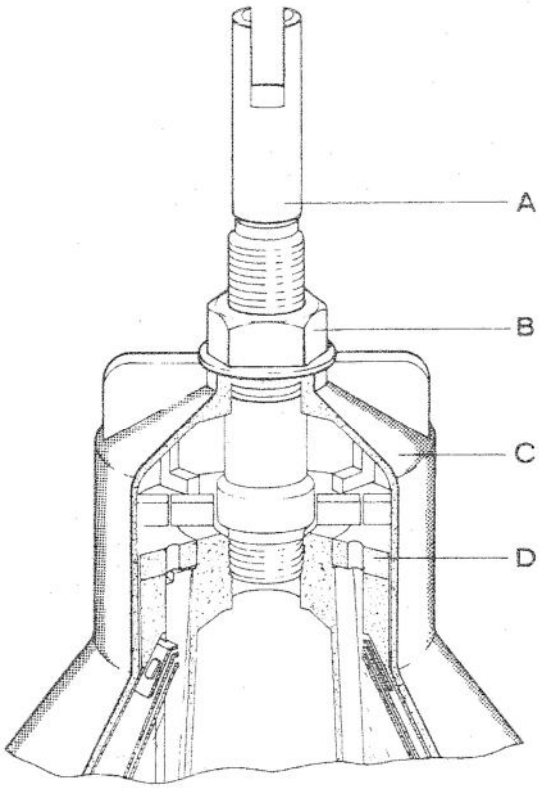

Fig. 4/7a

Before removing the retaining ring, compress disc set with disc stack compressing device in the following manner:

After removal of feed tube, screw bolt A all the way down into distributor neck. Place pressure piece C onto upper disc. Screw hexagon nut B onto bolt and tighten it with ratchet wrench 421 until retaining ring D can be turned in clockwise direction. Turn retaining ring clockwise until it hits stop. Remove disc stack compressing device (see 4.1. no. 14). Then remove retaining ring.

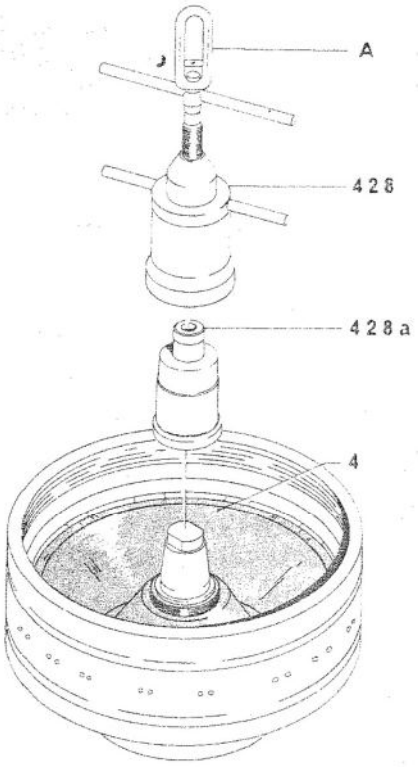

Fig. 4/7b

Place pressure piece 428a onto bowl bottom in such a manner that grooves in pressure piece fit over arresting pins of bowl bottom. Screw jack 428 onto sliding piston and force piston off the bowl bottom by turning threaded spindle of jack in clockwise direction. Then lift out sliding piston.

4.4. Removal and Installation of Polyamid Gasket 15 (fig. 19)

4.4.1. Removing Polyamid gasket from bowl top

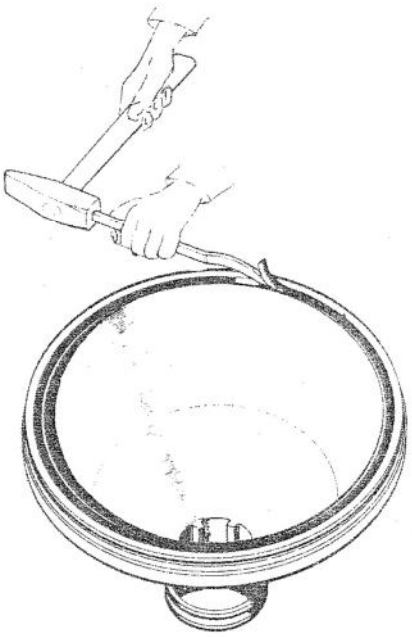

Fig. 4/8a

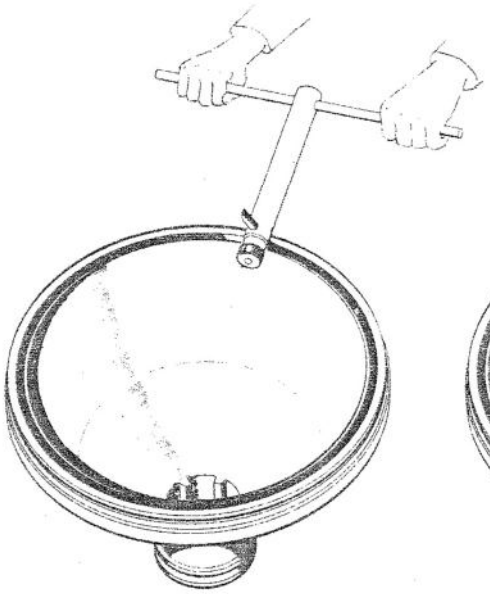

Fig. 4/8b

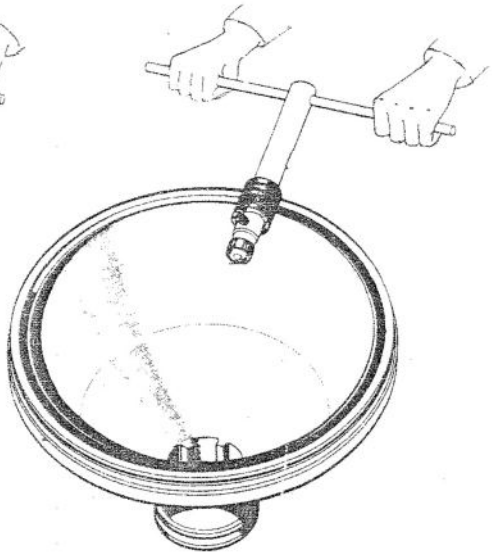

Fig. 4/8c

1) For about 10 minutes warm up gasket with a jet of hot water or steam (70 - 100°C).

2) Carefully cut the gasket with chisel 432 and lift a few inches of the gasket out of the groove (fig. 4/8a).

3) Put the end of the gasket through the hole of tool 419 (fig. 4/8b). By means of this tool roll up the gasket as shown in fig. 4/8c.

4.4.2. Installing the Polyamid gasket into bowl top

Fig. 4/9a

1) Keep gasket in 176°F water for about 5 minutes to warm it up.

2) Dry gasket with a rag.

3) Insert gasket (with its small side towards the bowl top) into the clean groove of bowl top. Place a piece of hard wood (fig. 4/9a) or a 5" long piece of the old gasket (fig. 4/9b) on the new gasket and hammer the gasket evenly into the groove until it protrudes from surface "A" of bowl top by not more than 1 mm (fig. 4/9c). If the gasket protrudes by more than 1 mm, it will be quite difficult to properly close the bowl lock ring so that its "O" mark is in line with the "O" mark on bowl bottom.

Fig. 4/9b

4) After assembly of the separator, prevent air circulation in the separator by

   a) closing the sediment discharge,

   b) closing the feed line (by means of a cock or a blind cap),

   c) closing the skim milk and cream valves.

Frame drain and air vent on frame drain must NOT be closed.

5) Run the separator for about one hour while the operating-water feed is closed. During this time, the bowl material will heat up through air friction to about 176°F at which temperature the Polyamid gasket will become pliable.

6) Now close the bowl by feeding operating water. Through the upward movement of the piston the warmed-up gasket will be pressed into the anchor grooves.

7) About 15 minutes after closing the bowl feed cold water to the bowl.

8) Be sure to re-open sediment discharge before sediment ejection takes place.

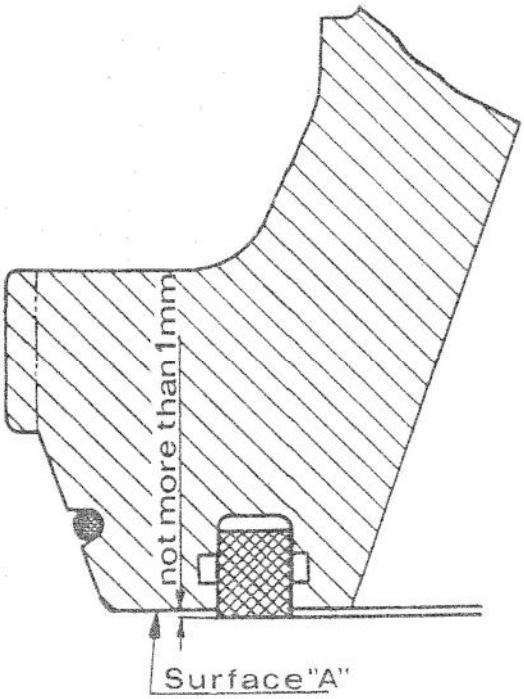

Fig. 4/9c

4.5. Removing the valve from the bowl bottom

Remove the valve from the bowl bottom once a month for cleaning. On this occasion, check condition of gaskets 1c and 1f and of sealing disc 1d and replace them, if necessary.

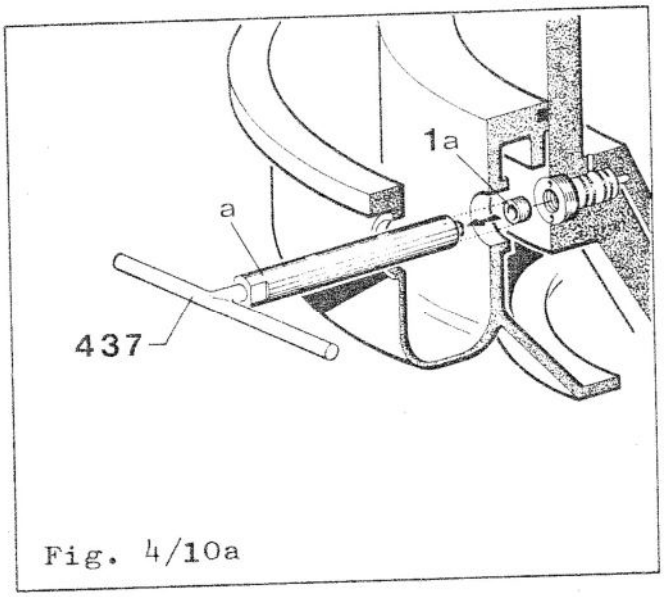

Fig. 4/10a

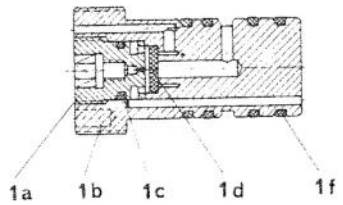

By means of wrench 437 screw plug 1a out of the valve; while unscrewing press threaded bush "a" against the valve to make the plug enter the bush with which it will then be removed.

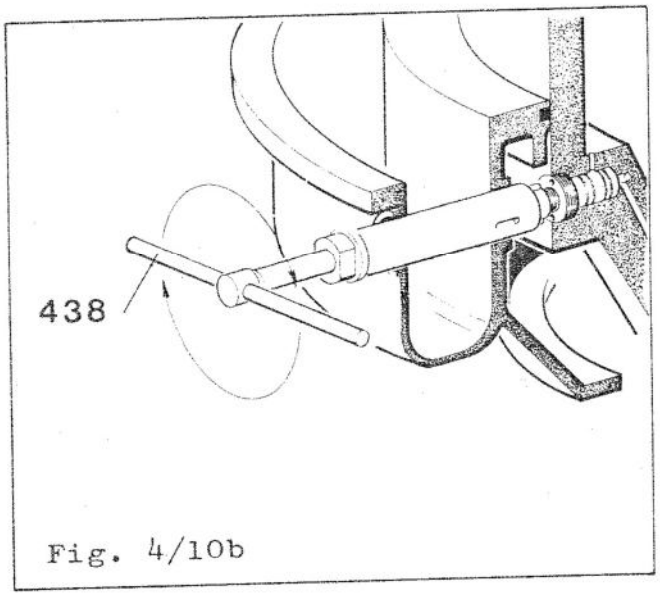

Fig. 4/10b

Screw socket wrench 438 into the valve.

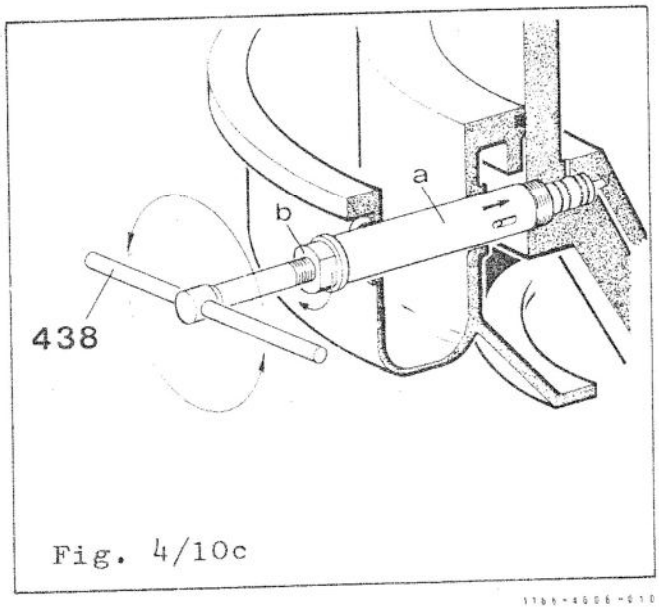

Fig. 4/10c

Introduce pins of bush a of wrench 438 in holes of valve. Tighten nut b. Then screw valve out of bowl bottom.

Before re-installing the valve, moisten gasketslf and grease threaded area.
Then screw in the valve all the way, however, be sure not to tighten it firmly.

5. Technical Information

5.1. Functioning of the hydraulic system of the bowl

The self-cleaning bowl is equipped for ejecting the sediment without interruption of operation. Dirt particles accumulate in the conical sediment space of the bowl. Ports on the bowl circumference are closed during operation by sliding piston 3. The sliding piston is hydraulically actuated to open and close the bowl ports, that means the water pressure created in filled sealing chamber 2 keeps the bowl closed. When the operating water drains out of the sealing chamber after closing solenoid valve 14, the product pressure above the piston pushes the piston down and opens the bowl ports. Opening valve 14 again and the booster bowl valve fills the sealing chamber fast with water. The water pressure in the sealing chamber pushes sliding piston 3 upwards and presses it against gasket 9, thus sealing the bowl.

During processing, the operating water flows through channel 4 into the valve 5 and pushes against sealing disc 6 from the outside. Sealing disc 6 thus seals water discharge channel 8 and keeps water trapped in sealing chamber 2.

Since a small amount of water continuously discharges through nozzle 7 of the valve, be sure to feed during processing sufficient operating water to maintain pressure against sealing disc. Otherwise bowl will open or amount of ejected sludge will vary, resulting in milk losses.

When solenoid valve 14 is closed for sediment ejection, sealing disc 6 in the bowl valve opens channel 8, and the water contained in sealing chamber 2 flows out through channel 11 of the valve.

After sediment ejection, sealing water is fed to the bowl, controlled by solenoid valve 14 and an additional solenoid valve as a booster, latter opens for a short period only to effect quick closing of the bowl.

All valves initiating the de-sludging process are controlled by the automatic timing unit supplied with the machine.

Sectional Diagram illustrating Sealing of the Bowl and Removal of Solid Matter

Bowl, closed

Bowl, open

Solids discharge

10
9
8
7
6
5
4
3
2
1
12
13
14
15

Fig. 5/1a

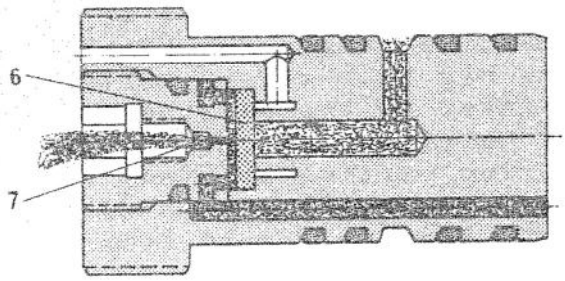

Fig. 5/1b

Functional diagram showing valve during clarification.

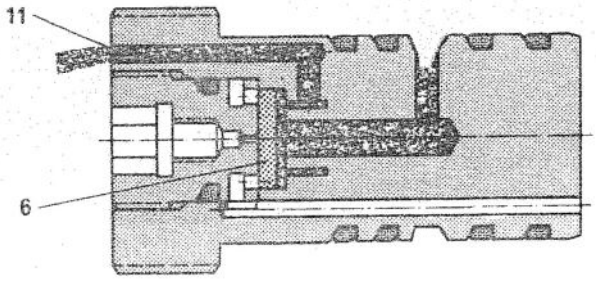

Fig. 5/1c

Functional diagram showing valve during solids ejection.

5.2. Control System

5.2.1. General

The control system consisting of a timing unit TVA 2-M and the operating-water connection is used to program automatic partial sediment ejections of the bowl during milk processing.

When apart from the periodic partial sediment ejections the chemical circulation cleaning of the separator and the pasteurizers is to be carried out automatically, then a timer of the type TVA 4-ER is to be used.

5.2.2. Timing Unit TVA 2-M

For operating principles of this unit refer to sect. 6.2.1. Circuit diagram, list of component parts, and dimension sheet are furnished with the timing unit.

The circuit elements necessary for programme-setting and for the control of the unit are numbered from 1 to 10 in fig. 5/2:

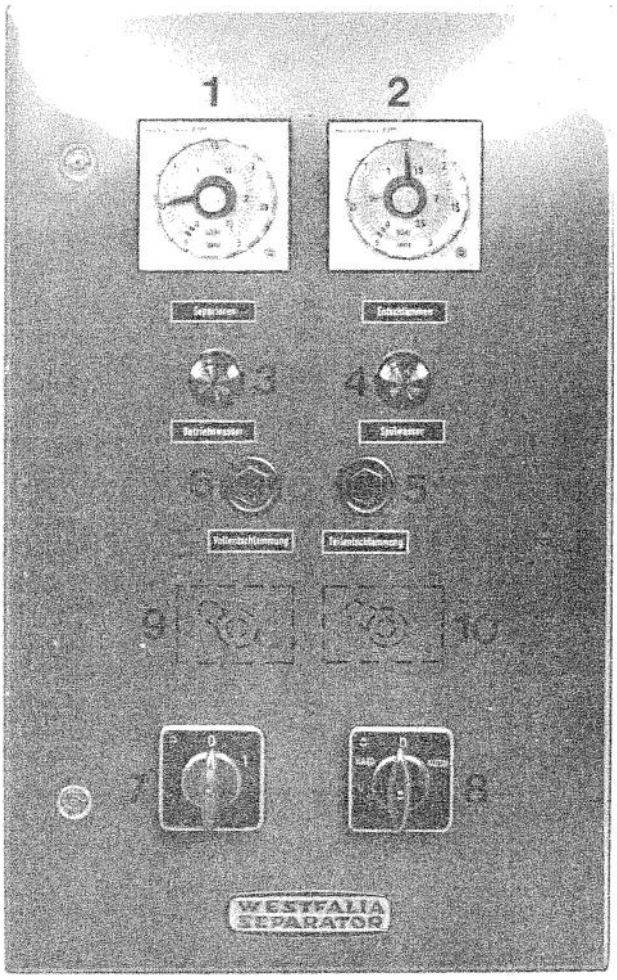

Fig. 5/2

1 = Timing Relay "Separation"

With the aid of the small knob, the timing relay can be set to five different time ranges. The big knob allows setting to any separating period between 0 and 3 hours. During separation, the red trailing pointer runs down the time scale from the point indicating the selected time of separation to zero.

When the separation time has elapsed, partial sediment ejection takes place. This procedure is automatically repeated at regular intervals. The timing relay "Separation" works only when selector switch 8 is set to "Automatic".

2 = Timing Relay "Partial De-sludging"

The small knob serves to adjust the time range, e.g. 3s = 3 sec. The big knob allows setting the pointer to the desired duration of partial sediment ejection. During partial sediment ejection the red trailing pointer runs down the time scale from the point indicating the selected duration of set partial ejection to zero. Timing relay "Partial De-sludging" works only when selector switch 8 is set to "Automatic".

3 = Pilot Lamp "Operating Water"

When this lamp lights up, the solenoid valve for operating water is open and the bowl is closed.

4 = Pilot Lamp "Flush Water"

When this lamp lights up, the solenoid valve for flushing of hood and sediment collector is open.

5 = Push button "Partial De-sludging"

By pressing this button, the programme in action can be interrupted and an automatic partial ejection can be initiated immediately. Upon termination of this "irregular" de-sludging process, the following partial ejections will take place again at the pre-set intervals.

6 = Push button "Complete De-sludging" (only to be actuated during chemical circulation cleaning)

By pressing this button, complete sediment ejection of the bowl takes place immediately. Feed pump(s) is (are) stopped automatically and put again into operation approx. 1 minute after complete ejection.

7 = Main Switch

To start the timing unit, set main switch to "1".

8 = Selector Switch "Hand-O-Automatic"

When the switch is set to "Hand" position, the operating-water valve on the separator is open and the bowl is closed. In this position the flush-water valve is open and the pilot lamp "Flush Water" lights up.
When the switch is set to "Automatic", partial ejections take place at pre-set intervals. If the selector switch has first been set to "Hand" to start the system under manual control, then be sure to switch over to "Automatic" when changing over to milk processing or to chemical circulation cleaning.

When switch is set to "O", the operating-water valve is closed. About 15 minutes after stopping the separator, set switch to "O" in order to close the operating-water valve. While bowl is at standstill, operating-water is not allowed to come in.

9 = Timing Relay "Pre-flushing" (housed in the control cabinet)

This relay is set to the period of time during which the solenoid valve for the flushing of hood and sediment collector is to be open before partial ejection.

The period of time the bowl is open for complete ejection (see no. 6) is the same as the time set for pre-flushing.

10 = Timing Relay "Subsequent flushing" (housed in the control cabinet

Timing relay "Subsequent flushing" can be adjusted to the period of time the solenoid valve for flushing the hood and sediment collector is to remain open after a partial or complete ejection.

During subsequent flushing, the sealing-water valve for rapid closing of the bowl is open. After complete ejection, upon termination of flushing, the feed pump is re-started automatically

5.2.2.1. Setting the Timing Relays

1) Timing relay "Separation"

Adjust the small knob to the time range 3h. By means of the big knob set pointer

for milk separation to 1 hour,
for whey separation to 15 - 30 minutes.

2) Timing relay "Partial de-sludging"

Set small knob to time range 3s. By means of the big knob adjust pointer for partial ejection period.

The duration of partial ejection (1 - 3 seconds) varies with the amount of ejected solids and must therefore be determined by running tests which can be carried through with water. When making the test, close manually-operated valve d (fig. 5/3). Adjust duration of partial ejection so that during milk processing approx. 5 litres and during whey processing approx. 10 litres will be ejected from the bowl.

3) Timing relay "Pre-flushing" (housed in the control cabinet) has been set at the factory to 10 - 12 seconds.

4) Timing relay "Subsequent flushing" (housed in the control cabinet) has been set at the factory to 60 seconds.

5.2.3. Operating-water connection

The inner diameter of the supply line to be connected to the operating-water system should be 1", and the pressure in this line should be approx. 21 psi. During separation, throttle valve b (fig. 5/3) so that approx. 450 - 500 litres/h of operating water will be fed to the separator.

The operating water must be clean so that at temperatures of up to 80°C no precipitations will occur.

During complete ejection operations, the operating water may become contaminated. This should be considered when re-using the operating water.
Provisions have to be made that during the CIP-process the operating water is sent off to the sewer.

The strainer in filter G has to be cleaned from time to time.

IMPORTANT: Cold or warm water may be used as operating water. However, the water must NOT be too warm, since evaporation would result in pressure drop in the sealing chamber of the bowl.

5.2.3.1. Arrangement of the solenoid valves

In addition to the three solenoid valves A, B, and D the operating-wate connection comprises the rapid closing valve C connected in parallel with valves A and B, and four manually-operated valves a, b, d, and f. This arrangement assures continuance of operation since, in the event of failure of one of the three solenoid valves or of the timing unit, it allows changing over to manual operation.
For manual operation proceed as follows:

Open rapid-closing valve C.
Close manually-operated valves a and b.

Partial sediment ejection, initiated manually

1) Shut off rapid-closing valve C in order to open the bowl.
2) As soon as de-sludging noises can be heard, open rapid-closing valve all the way in order to close the bowl.
3) Throttle rapid-closing valve C to the extent (approx. 7 psi) that about 450 litres/h of operating-water discharge from the frame drain

Complete sediment ejection, initiated manually

1) Shut off rapid closing valve.
2) When de-sludging noises have stopped, re-open rapid-closin valve to close the bowl.

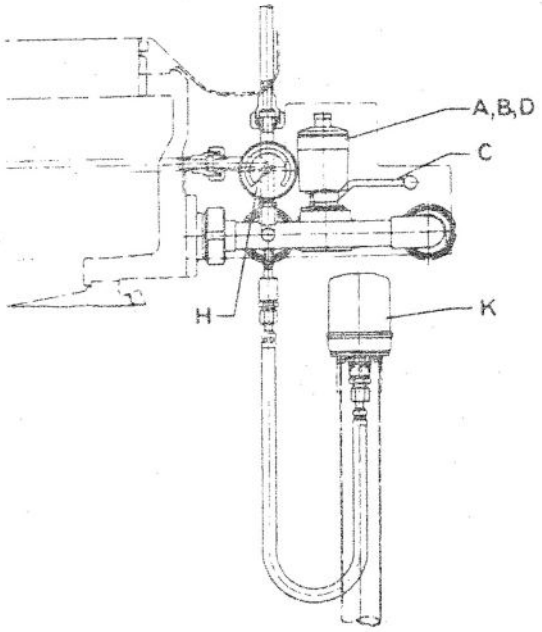

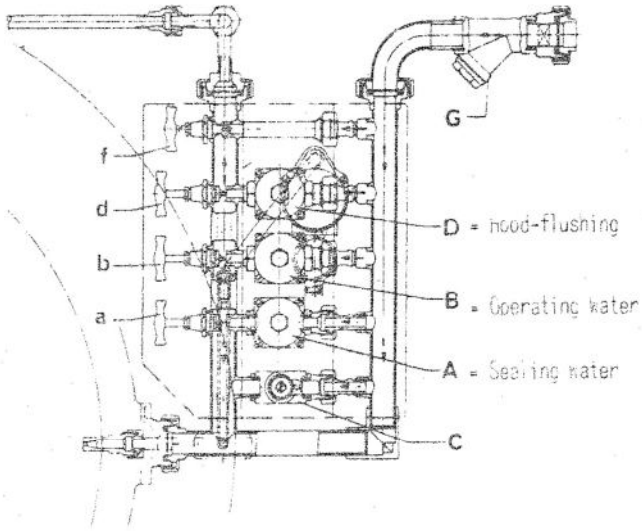

Fig. 5/3
Arrangement of the solenoid valves

5.2.3.2. Pressure switch

For closing the bowl, a minimum operating-water pressure of abou 9 psi is required.
A lower pressure may result in unintended opening and de-sludgi of the bowl. For this reason, th operating-water line is provided with pressure switch K which stops the milk supply and causes a klaxon to sound when the pressure drops below the minimum value.

A detailed description of the pressure switch is furnished with the timing unit.

5.2.3.3. How the solenoid valves function (fig. 17/2)

The solenoid valve (straight-way diaphragm valve) has its own pilot system. When the solenoid is de-energized, i.e. when the pilot valve is closed, the water passing from the feed side of the valve through a bore into the chamber above diaphragm 2 cannot escape so that a pressure equivalent to the line pressure builds up above the diaphragm. Since the area of the upper side of the diaphragm exposed to water is by the flow area of the valve seat larger than the underside of the diaphragm exposed to the same liquid pressure, the diaphragm is pressed on the valve seat, thus keeping the valve closed.

Upon energizing of solenoid coil 15, core 10 is pulled upwards, and plug 9 is lifted from the valve seat, so that the water is able to escape towards the discharge side of the valve.

Since the diameter of the outlet opening of the chamber above the diaphragm is larger than the diameter of the inlet opening, the water flows out more quickly than it flows in, - resulting in pressure drop above the diaphragm. Through the higher pressure acting on the underside of the diaphragm, the latter is lifted off its seat, thus opening the valve.

When the current is cut off, spring 11 pushes down the magnet core, thus closing the pilot valve. Liquid pressure builds up again above the diaphragm, and the main valve closes.

To prevent impurities from getting into the pilot system, cover 5 has been fitted with filter ring 6 which should be cleaned occasionally.

5.2.3.4. Maintaining the valves

The solenoid valves do not require special maintenance. However, care should be taken that the magnet heads are always screwed tightly to the top of the valve body to ensure perfect sealing action of the gaskets.

Filter ring 6 in cover 5 of the straight-way diaphragm valve should be ridded occasionally of ferrous or calcareous deposits precipitated from the water, in order to ensure satisfactory functioning of the valve. These deposits will easily dissolve in a bath of hydrochloric acid where the filter should be left to soak for a short time only. The filter has to be flushed thoroughly with water before re-installation.

5.2.3.5. Locating the electric troubles

Electric troubles may originate from various sources.

If it has been found that the control cabinet functions properly and that voltage is present at the valve terminals of the terminal strip while the corresponding timing relay is operating, the trouble will have to be ascribed either to a defective solenoid coil, or to open circuit between terminal strip and valve, or to poor connection.

To repair a defective solenoid coil, pull the magnet housing off the valve top after having removed the cover screw. Before doing so, make sure that power is turned off and cannot be turned on during repair.

The solenoid coil is cast integral with the magnet housing. Therefore, if the coil needs replacement, the complete assembly (magnet head, Part-No. 0018-4446-830, page 17/3) will have to be replaced.

After having mounted the magnet head on the valve, firmly screw on the cover (provided with a rubber gasket) and tighten the gland. The gland should, in addition, be sealed with putty.

Straight-way Diaphragm Valve 3/8"

No. in Fig.	Part - No.	Qty.	Part Description	
-	0018-4445-500	1	Straight-way diaphragm valve, complete, 3/8" (1-19)	
1	0018-1988-500	1	Valve housing	
2	0018-1989-500	1	Diaphragm	
3	0018-1990-500	1	Pilot valve seat	
4	0018-1991-500	1	Supporting disc	
5	0018-1992-500	1	Valve housing cover	
6	0018-1993-500	1	Filter ring	
7	0007-2408-750	1	Gasket 22/25Ø x 1,5	
-	0018-1982-000	1	Magnet core assembly (items 8-9-10)	
8	0026-1577-120	1	Notched pin 2,5 x 10	
9	0018-2542-750	1	Plug	
10	0018-1982-410	1	Magnet core	
11	0006-4080-400	1	Pressure spring	
12	0018-1980-510	1	Bush	
-	0018-4446-830	1	Magnet head, compl., (50 cycles)	Items 13-14-15: Optional, depending on frequency
-	0018-4446-840	1	Magnet head, compl., (60 cycles)	
13	0005-0202-630	1	Cable gland	
14	0018-1954-510	1	Set of two terminals	
15	0018-1985-530	1	* Magnet coil (50 cycles)	Optional, depending on frequency
15	0018-1985-540	1	* Magnet coil (60 cycles)	
16	0007-2257-750	1	Gasket 48/51Ø x 115	
17	0018-1987-500	1	Magnet housing cover	
18	0018-1955-520	1	Lock nut	
19	0007-1932-750	1	Gasket 12/1,5Ø	

* The magnet coil is cast integral with the magnet housing. Therefore, if the coil needs replacement, the complete magnet head assembly (items 13-14-15) will have to be replaced.

Operating-water Connection

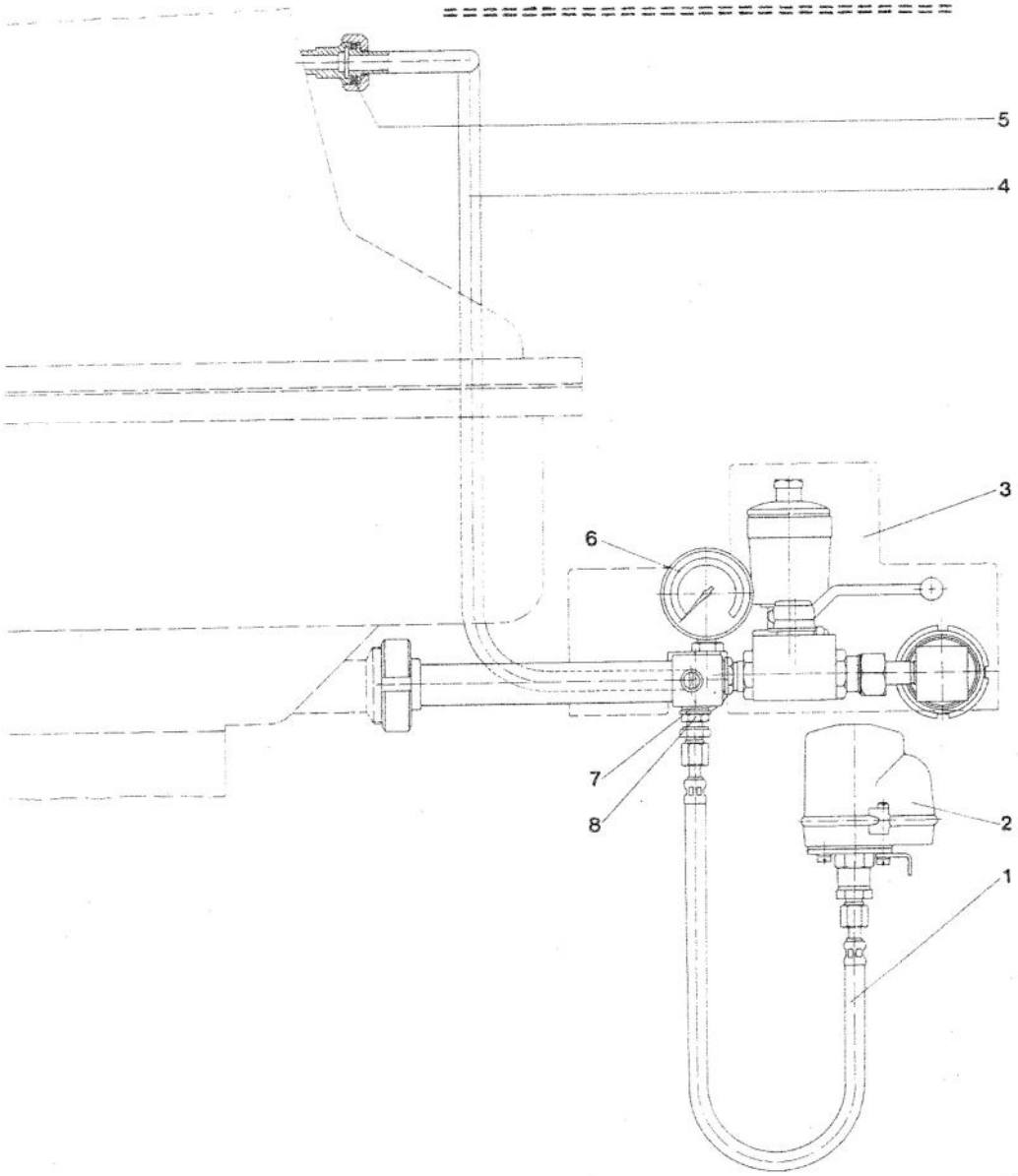

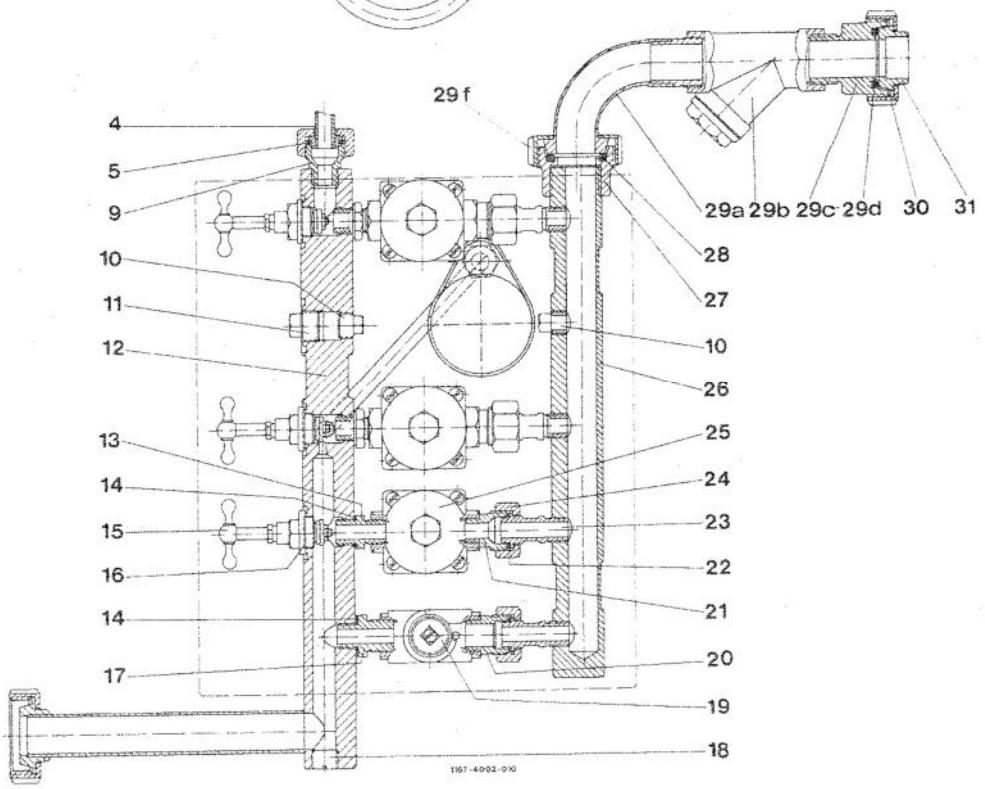

Fig. 17/1

Operating-water connection

No. in Fig.	Part - No.	Qty.		Part Description
-	1165-2350-000	1		Pressure switch assembly (1-2)
1	0018-1870-000	1		Low-pressure hose 6x600
2	0005-0675-900	1		Pressure switch F5
-	0004-5268-880	1		Gasket 13/19 Ø x 1,5 — for closing the pipe, if no pressure switch is to be installed
-	0019-0137-300	1		Hex head screw R 1/4"x12 — for closing the pipe, if no pressure switch is to be installed
-	8134-2100-140			Operating-water connection with Protecting case (3-31)
3	8134-2355-000	1		Protecting case
-	1165-2210-000	4	*	Pipe clamp
-	0019-6841-400	8	*	Hex head screw M 6x15 DIN 933
-	0026-1343-300	8	*	Washer
-	0013-0276-300	8	*	Hexagon nut M 6 DIN 934
4	8134-2201-000	1		Pipe line
5	0007-2402-750	1		Gasket 17/23x3
-	8134-2099-000			Operating-water connection, complete (6-29f)
6	0001-0298-640	1		Pressure gauge
7	0004-5268-880	4		Gasket 13/19x1,5
8	0019-0137-300	2		Hex head screw R 1/4" x 12
9	0018-4645-300	1		Threaded connection R 3/4" / R 3/8"
10	0018-0989-300	2		Plug 3/8" - T9 DIN 2950
11	0018-0990-300	1		Plug 1/2" - T9 DIN 2950
12	8134-2193-020	1		Connection piece
13	0018-0961-640	3		Double nipple 3/8"
14	0004-5285-760	4		Gasket 17/23,5x1
15	0018-1299-640	3		Upper part of valve 1/2" DIN 3519
16	0007-2024-750	3		Gasket 17/24x2
17	0018-1786-640	1		Reducing nipple 1/2" / 3/8"
18	0019-0641-400	1		Threaded plug R 3/4" x 12
19	0018-1710-640	1		Ball-type valve 1/2"
20	0018-4646-300	1		Threaded connection R 3/4" - R 1/2"
21	0018-4645-300	3		Threaded connection R 3/4" - R 3/8"
22	0007-2188-750	4		Gasket 15,5/21,5x1,5
23	0018-3854-300	4		Connection piece 10/R 3/8"
24	0013-2818-400	4		Hexagon coupling nut R 3/4"
25	see page 17/3	3		Straight-way diaphragm valve
26	8134-2194-020	1		Connection piece
27	0018-4086-400	1		Threaded connection 25/R1"
28	0007-2208-750	1		Gasket G 25 DIN 11851
-	8134-2201-010	1		Pipe line assembly (29a-f)
29a	0018-1609-300	1		Bend 25/R1"
29b	0018-2525-630	1		Sediment collector
29c	0018-4502-300	1		Threaded connection 25/R1"
29d	0007-2208-750	1		Gasket G 25 DIN 11851
29f	0013-2842-300	1		Grooved coupling nut F 25 DIN 11851
30	0013-2842-300	1		Grooved coupling nut F 25 DIN 11851
31	0018-3939-300	1		Cone connection D 25 DIN 11851

* This part is included in protecting case 3, but it is also available as separate item.

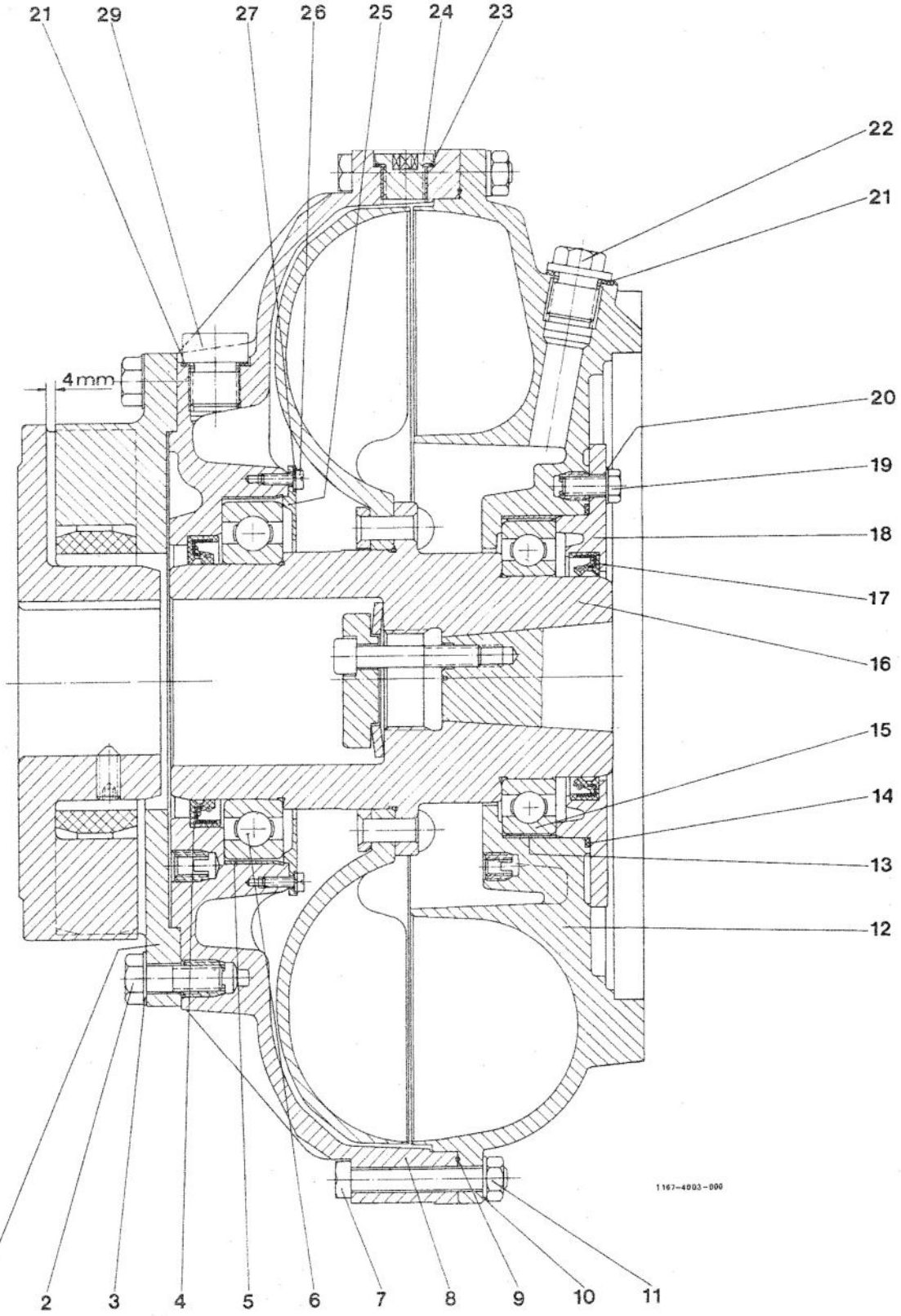
21
29
27
26
25
24
23
22
21
4mm
20
19
18
17
16
15
14
13
12
1167-4003-000
1
2
3
4
5
6
7
8
9
10
11

Fig. 16

Fluid Clutch

No. in Fig.	Part - No.	Qty.		Part Description
-	1166-3280-000	1		Fluid clutch assembly (1-29) (see also fig. 15, item 29)
1	-	1	*	Cam flange
2	-	8	**	Hex head screw M 12x35 DIN 931
3	-	8	**	Spring washer B 12 DIN 137
4	0004-2913-830	1		Sealing ring 105x130x13
5	0026-0182-170	1		Spacer ring ANS 160x26
6	0011-6021-380	1		Grooved ball bearing 6021 MA/C4 DIN 625
7	-	36	**	Hex head screw M 10x70 DIN 931
8	-	1	*	Clutch casing 470Ø
9	0004-2385-858	1		Packing cord 1 mm Ø, 1400 mm long
10	0026-0771-170	36		Spring washer B 10 DIN 137
11	-	36	**	Hexagon nut M 10 DIN 934
12	-	1	*	Primary wheel 470Ø
13	0026-0180-170	1		Spacer ring AN 140x24
14	0007-2944-830	1		Gasket 140/3Ø
15	0011-6018-380	1		Grooved ball bearing 6018 MA/C4 DIN 625
16	-	1	*	Secondary hub with secondary wheel 425Ø
17	0004-2912-830	1		Sealing ring 90x110x13
18	-	1	**	Sealing ring cover
19	-	8	**	Hex head screw M 8x20 DIN 933
20	0026-0770-170	8		Spring washer B 8 DIN 137
21	0004-2144-280	2		Gasket 22/29Ø x 1,5
22	-	2	**	Plug M 22x1,5x20
23	0004-2131-280	1		Gasket 18/24Ø x 1,5
24	0019-1490-000	1		Threaded plug M 18x1,5x15
25	-	1	**	Oil control ring 119/192Ø x 4,5
26	-	8	**	Cylindrical screw AM 5x15 DIN 84
27	-	8	**	Lock washer 5 DIN 7980
29	0019-1551-090	1		Oil fill plug M 22x1,5

* If this part needs replacement, the complete clutch must be returned to the factory for repair. Instead of part-number state item-number (see first column).

** Instead of part-number state item-number (see first column).

Horizontal Gear Parts

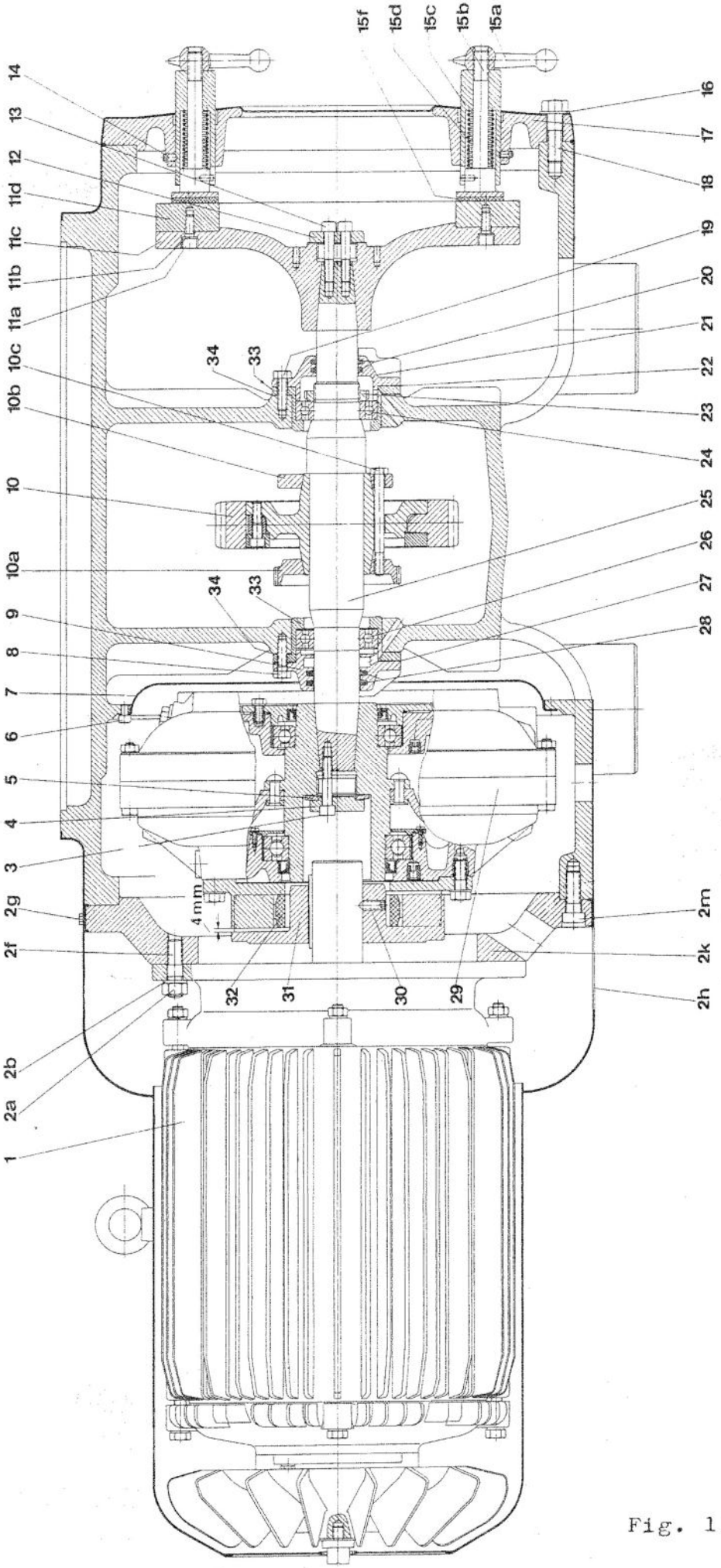

Fig. 15

Horizontal Gear Parts

No. in Fig.	Part - No.	Qty.		Part Description
1	5970-L	1	*	Motor
-	1165-1021-010	1		Flange assembly (2a-m)
2a	0013-0282-400	8		Hexagon nut M 16 DIN 934
2b	0026-1330-190	8		Lock washer A 16 DIN 127
2f	0019-7727-090	8		Stud M 16x45 DIN 939
2g	0019-6839-300	8		Hex head screw M 6x10 DIN 933
2h	1080-1475-050	1		Cover
2k	1165-1028-000	1		Flange
2m	0019-6202-150	8		Allen screw M 16x45 DIN 912
3	0019-6150-150	3		Allen screw M 10x55 DIN 912
4	0026-1640-030	1		Centering disc
5	0006-4404-010	1		Cup spring
6	0019-6119-150	8		Allen screw M 8x12 DIN 912
7	1166-1118-000	1		Baffle
8	0019-6938-150	3		Hex head screw M 10x35 DIN 933
9	3050-3375-010	1		Bearing cover
10	1167-3449-020	1		Worm wheel assembly with clamp plates
10a	1166-3447-000	1	**	Clamp plate with toothing
10b	1166-3446-000	1	**	Clamp plate
10c	0019-6525-150	4	**	Hex head screw M 10x110 DIN 931
-	1166-3368-010	1		Brake drum assembly (11a-d)
11a	0019-6144-150	6		Allen screw M 10x25 DIN 912
11b	0026-1337-170	6		Lock washer A 10 DIN 127
11c	1166-3371-010	1		Brake drum
11d	3170-3371-000	1		Brake ring
12	0026-0405-030	1		Disk
13	0019-6150-150	2		Allen screw M 10x55 DIN 912
14	0019-8974-150	2		Threaded pin M 8x15 DIN 914
-	3170-1043-000	2		Brake assembly (15a-f)
15a	0021-3514-300	2		Brake handle
15b	3170-1031-000	2		Brake bolt (with lining)
15c	0021-3537-300	2		Brake housing
15d	0006-4208-160	2		Cylindrical pressure spring
15f	0021-4096-850	2		Brake lining
-	0026-1263-550	8		Countersunk rivet
16	0026-1353-400	4		Washer
17	3170-1065-010	1		Fan cover
18	0019-6608-400	4		Hex head screw M 16x60 DIN 931
19	0019-6938-150	3		Hex head screw M 10x35 DIN 933
20	0004-1954-830	2		Felt ring 45/58 x 5,5
21	3170-3375-000	1		Bearing cover
22	0004-1822-740	1		Gasket 90/140 x 1
23	0013-0448-090	1		Grooved nut M50x1,5
24	0011-6210-000	1		Grooved ball bearing 6210 DIN 625
25	1166-3400-000	1		Worm wheel shaft
26	0011-6210-000	1		Grooved ball bearing 6210 DIN 625
27	0004-1822-740	1		Gasket 90/140 x 1
28	0004-1955-830	2		Felt ring 50/66 x 7
29	see page 16/1	1		Fluid clutch (see fig. 16)
30	0019-8964-150	1		Threaded pin AM 10x25 DIN 914
31	3158-3392-010	1		Cam hub
32	3158-3282-000	1		Cam ring
33	1166-3131-000	2		Bearing housing
34	0004-1850-740	2		Gasket 99/140 x 1

* When ordering this part, please state also voltage and frequency.

** This part is included in worm wheel assembly with clamp plates,10, but it is also available as separate item. When the worm wheel needs to be replaced, it is recommended to replace worm 5k (fig. 14) at the same time (see 8.5, no. 4).

Vertical Gear Parts

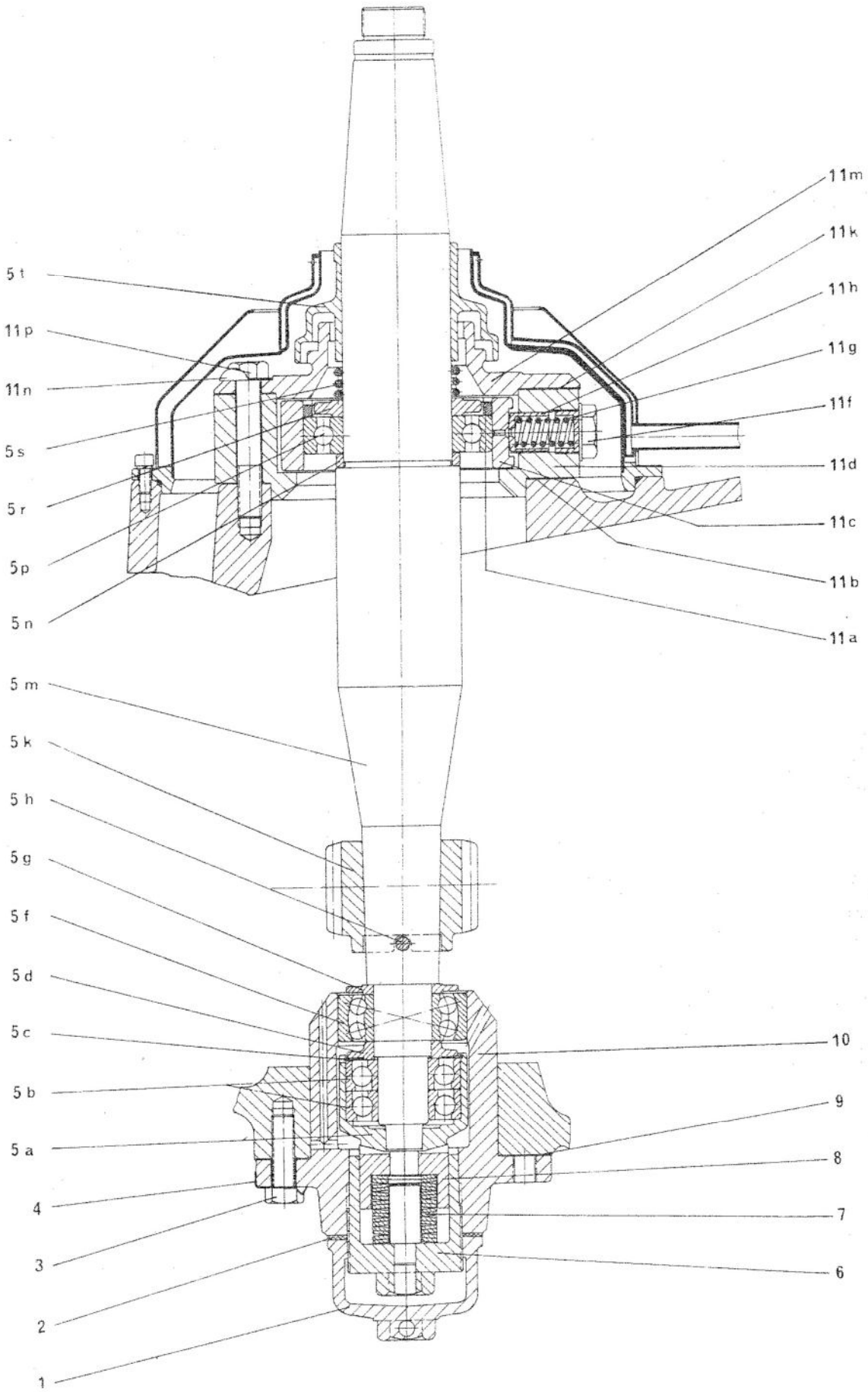

Fig. 14

Vertical Gear Parts

No. in Fig.	Part - No.	Qty.		Part Description
1	0010-8003-210	1		Bottom bearing cap
2	0004-2221-740	1		Gasket 80/108x2
3	0019-7038-150	4		Hex head screw M 16x45 DIN 933
4	0026-5894-600	4		Safety washer 17 DIN 93
-	1167-3429-000	1		Worm spindle assembly (5a-t)
5a	0010-8012-020	1		Bottom bearing pressure housing
5b	0011-7307-100	2		Angular contact ball bearing 7307 BGM/P6 DIN 628
5c	0026-2109-170	1		Snap ring
5d	0008-4008-030	1		Ball bearing protection ring
5f	0011-2308-120	1		Pendulum ball bearing 2308 M/P6 DIN 630
5g	0008-4008-020	1		Ball bearing protection ring
5h	0026-1563-120	1		Notched pin 10x70 DIN 1473
5k	3170-3423-010	1	*	Worm
5m	3159-3410-000	1		Spindle
5n	0008-6512-050	1		Ring
5p	0011-6213-110	1		Grooved ball bearing 6213/P6 DIN 625
5r	0008-6508-050	1		Ball bearing protection ring
5s	0006-4383-160	1		Cylindrical pressure spring
5t	0008-6501-750	1		Spindle cap
6	0010-8002-040	1		Bottom bearing threaded piece
7	0006-4440-160	1		Spring column
8	0010-8001-200	1		Bottom bearing pressure piece
9	0004-5793-770	1		Gasket 130/204Ø x 0,3
10	3050-1112-020	1		Bottom bearing housing
-	0008-6500-030	1		Neck bearing bridge assembly with covering (11a-p)
11a	0008-6509-050	1		Distance ring
11b	0004-5851-770	1		Gasket 176/235Ø x 0,3
-	0008-6510-070	1		Neck bearing bridge assembly (11c-h)
11c	0008-6507-000	1		Pressure ring
11d	0008-6506-000	1		Neck bearing bridge
11f	0019-1423-030	9		Threaded plug
11g	0006-4380-090	1		Set of neck bearing springs
11h	0026-2220-110	9		Spring piston
11k	0004-5852-770	1		Gasket 167/250Ø x 0,3
11m	0008-6502-200	1		Protection cap
11n	0026-5894-600	3		Safety washer 17 DIN 93
11p	0019-6616-090	3		Hex head screw M 16x100 DIN 931

* When the worm needs replacement, it is recommended that the worm wheel assembly with clamp plates 10a-g (fig. 15) be replaced at the same time.

Frame and Hood

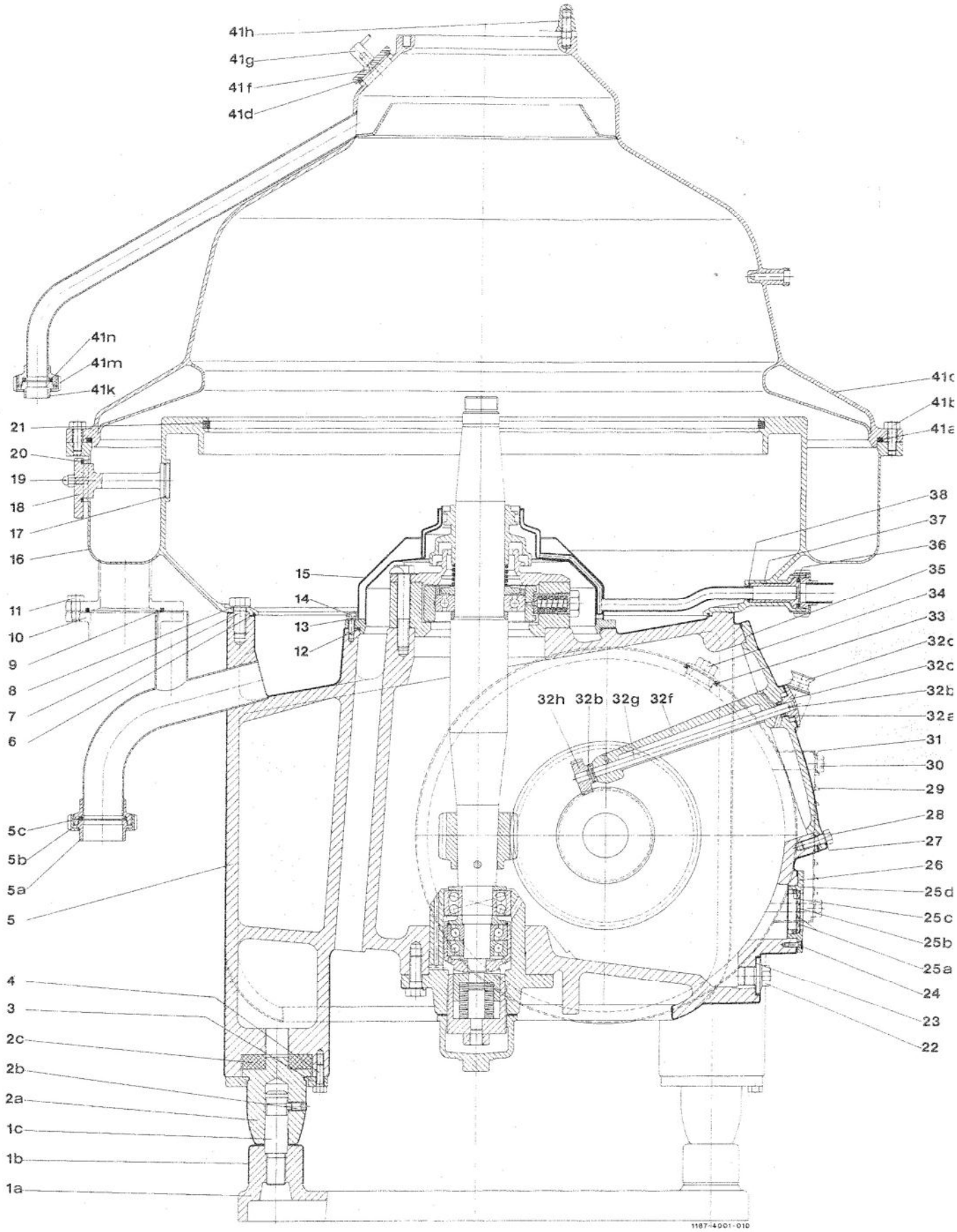

Fig. 13/1

Frame and Hood

No. in Fig.	Part - No.	Qty.	Part Description
-	3170-1020-010	1	Foundation frame assembly (1a-c)
1a	3170-1003-010	1	Foundation frame
1b	0026-2031-300	4	Cap
1c	3157-1033-000	4	Bolt
-	2315-1015-010	4	Foot assembly (2a-c)
2a	2315-1011-000	4	Foot, stainless steel coated
2b	0019-6387-400	4	Threaded pin M 12x28 DIN 915
2c	0021-3018-750	4	Rubber cushion
3	0001-0516-300	4	Flange
4	0019-6937-400	12	Hex head screw M 10x30 DIN 933
5	1166-1006-030	1	Lower section of frame
5a	0018-3955-300	1	Cone connection D50 DIN 11851
5b	0013-2845-300	1	Grooved coupling nut F50 DIN 11851
5c	0007-2211-750	1	Gasket G50 DIN 11851
6	0007-2954-750	1	Gasket 590/4
7	0019-7036-400	8	Hex head screw M16x35 DIN 933
8	0004-2290-400	8	Gasket 16,7/24x1,5
9	0007-2113-750	1	Gasket 94/104x6
10	1167-1045-000	1	Pipe connection
11	0019-6968-300	3	Hex head screw M 12x25 DIN 933
12	0007-2571-750	1	Gasket 297/4
13	0026-1325-400	8	Lock washer A8 DIN 127
14	0019-6122-400	8	Allen screw M 8x20 DIN 912
15	1167-1219-010	1	Operating-water feed
16	1165-1018-010	1	Sediment collector
17	0007-2580-750	1	Gasket 42/2,5
18	1165-1183-000	1	Plug
19	0013-0404-400	2	Cap nut M 8 DIN 1587
20	0007-2320-750	1	Gasket 45/55x5
21	0007-2800-840	1	Gasket
22	0018-0840-400	1	Oil drain screw
23	0004-5037-710	1	Gasket 38/50x1,5
24	0019-3250-300	3	Lens head screw M 6x15 DIN 964
-	0001-0007-300	1	Sight glass assembly (25a-d)
25a	0004-5041-740	2	Gasket 48/57x1
25b	0001-0046-820	1	Sight glass
25c	0019-1620-300	1	Threaded ring
25d	0001-0021-300	1	Sight glass frame
26	0004-5346-770	1	Gasket 70/110x0,3
27	0026-1371-400	4	Washer
28	0019-6970-400	4	Hex head screw M 12x30 DIN 933
29	3050-1085-010	1	Ventilation grid
30	0019-6966-400	4	Hex head screw M 12x20 DIN 933
31	0026-1375-300	4	Washer
-	3170-3495-010	1	Revolution indicator assembly (32a-h)
32a	0004-5523-750	1	Sealing ring A 12x22x7 DIN 3760
32b	0026-1049-030	2	Cylindrical pin 3h8x24 DIN 7
32c	3117-3497-020	1	Revolution indicator disc
32d	0019-1543-400	1	Oil fill screw
32f	3170-3510-000	1	Housing
32g	0026-5694-030	1	Cylindrical pin 12h8x302
32h	3117-3487-000	1	Worm wheel
33	0007-2229-750	1	Gasket 40/48x5
34	0019-1548-400	1	Plug
35	0004-5762-700	1	Gasket 273/322 x 2
36	0007-2208-750	1	Gasket G 25 DIN 11851
37	1167-1074-000	1	Bush
38	0007-2507-750	1	Gasket 16/3,5
-	1165-7759-050	1	Hood assembly (41a-41n)
41a	0004-2364-758	1	Packing cord 8x8x3300
41b	0019-6970-400	8	Hex head screw M 12x30 DIN 933
41c	1165-7765-050	1	Hood
41d	0007-2262-750	1	Gasket 45/57x6
41f	1165-1061-000	1	Inspection cover
41g	0013-2646-300	2	Cap nut M10
41h	0013-2626-400	4	Cap nut M12
41k	0018-3939-300	1	Cone connection D 25 DIN 11851
41m	0013-2842-300	1	Grooved coupling nut F25 DIN 11851
41n	0007-2208-750	1	Gasket G 25 DIN 11851

L I S T O F P A R T S

IMPORTANT!

When ordering parts, please state the following:

1) Model 2) Serial-No.	of the Separator: Both designations are shown on the name-plate of the separator. The Serial-No. also appears on the rim of the sludge collector.
3) Description 4) Part-No.	of the part to be replaced: For details, see List of Parts. The Part-No. is also shown on all major parts.
5) Bowl Serial-No.	(only required when ordering bowl parts): The Bowl Serial-No. appears, in large figures, on bowl lock ring and on bowl bottom.

Part-Nos. ending with letter "L" (e.g. 3158-1021-L) designate parts which are available in different designs for the separator concerned. To ensure correct delivery of these parts, Model and Serial-No. of the Separator MUST be stated.

Troubles	Causes	Remedies
10.2.2. The bowl does not close and open properly (cont'd.).	3) Gasket 12 (fig. 19) in sealing ring is damaged.	Replace gasket.
	4) Gasket 10 (fig. 19) has not been inserted in hub of bowl bottom.	Insert gasket in hub of bowl bottom.
	5) Gasket 5 (fig. 19) in sliding piston is uneven in height.	Replace gasket. The differences in height on a gasket must not exceed 0.25 mm.
	6) The sealing edge of sealing ring 13 on sliding piston (fig.19) is damaged.	Replace sealing ring.
	7) The solenoid valve does not function properly because the diaphragm has become brittle and, therefore, fails to seal properly.	Install a new diaphragm Make sure that hole on outer rim of diaphragm lies over hole of valve housing.
10.2.3. The bowl does not open at all or not completely.	1) Dry dirt or rubber particles have settled between sliding piston and bowl bottom.	Clean bowl parts. Round off edges of gaskets. Replace damaged gaskets. Grease guide surfaces with the special lubricating paste supplied.
	2) The sealing chamber 2 (fig. 5/1c) is soiled.	Remove sliding piston 3 and clean sealing chamber.
	3) Valve in bowl bottom is clogged.	Remove valve (see 4.5) and clean it.
	4) The solenoid valve does not function properly because the diaphragm has become brittle and, therefore, fails to seal properly.	Install a new diaphragm Make sure that hole on outer rim of diaphragm lies over hole of valve housing.

10.2. Bowl performance

Troubles	Causes	Remedies
10.2.1. The bowl does not close at all.	1) The amount of operating-water fed to the bowl is insufficient because a) the water pressure in the supply line to the operating-water connection is too low, b) the water discharge holes in the top of the operating-water feed 15 (fig. 13/1) are clogged with scale.	a) Check water pressure in the supply line which should be at least 18,5 psi. Throttle valve b (fig. 5/3) to the effect that about 450 litres/h of operating water are fed to the separator. For a short period of time after each partial ejection the flow rate of the water passing through the valve for sealing water must total 900 litres/h. Measure amount of water discharging from the frame drain. b) Clean discharge holes.
	2) The valve 3 in bowl bottom (fig. 19) is leaky or clogged.	Remove valve (see 4.5). Replace damaged gaskets and clean the valve.
	3) Strainer G (fig. 5/3) in the filter is dirty.	Clean the strainer.
	4) Gasket 5 (fig. 19) in the sliding piston is damaged or its edges have been frayed through the up and down movement of the piston.	Replace damaged gasket. If, however, only the edges of the gasket are frayed and the gasket is not damaged otherwise, it can be re-used after grinding it off with an emery wheel.
	5) Gasket 38 (fig. 13/1) is damaged or has not been inserted.	Replace or insert gasket.
	6) The operating-water feed is clogged.	Clean operating-water feed or replace it.
10.2.2. The bowl does not close and open properly.	1) Gasket in sliding piston does not fit properly at all points of the guide surfaces, thus failing to seal properly.	If necessary, stretch gasket. Before installing the gasket, lightly grease groove in sliding piston (see 4.1., no. 6).
	2) Gasket 15 (fig. 19) in bowl top is damaged.	Replace gasket (see 4.4).

Troubles	Causes	Remedies
10.1.4. Uneven run of the separator (cont'd).	7) Gear parts are in bad condition as a result of 1. normal wear, 2. premature wear caused by a) lack of oil, b) oil of too low a viscosity, } in general recognizable by blue tempering colour of gear parts c) metal abrasives present in the oil due to the following possible causes: - viscosity of oil is too low, - oil has not been changed in time, - gear chamber has not been cleaned, d) replacement of one gear part only, instead of both parts, e) water breaking-in because operating-water pressure is too high or because operating-water valve was open for a longer period after shut-down of the separator.	Clean gear chamber thoroughly (see 7.4). Replace damaged gear parts: see 8.2 para.6 and 8.5 para.4. Replace oil (see sect. 2). If necessary, change oil more often. Regarding water breaking-in, the following should be kept in mind Make sure that operating-water valve is always closed during shut-down of the separator. If necessar provide a second shut-off device.
10.1.5. Bowl lock ring is difficult to loosen.	Bowl has not been dismantled regularly (see page 0/3, para. 10).	Block the bowl by putting small wooden wedges between bowl and sediment collector

Troubles	Causes	Remedies
10.1.4. Uneven run of the clarifier.	1) Incomplete solids ejection of the bowl. The remaining solids have deposited unevenly in the bowl. 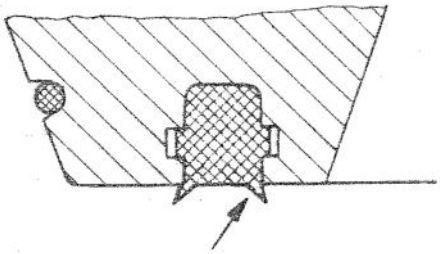	De-sludge the bowl several times. If that does not improve conditions, close the bowl and fill it with water in order to attenuate vibrations which occur during slowing-down of the bowl. Stop the separator and apply brakes. If bowl leaks, leave feed open. Clean the bowl thoroughly. Remove the protruding edges of the bowl gasket with a knife (see opposite sketch).
	2) The bowl is not properly assembled, or if the plant has several separators, parts of different bowls may have been interchanged.	Assemble bowl correctly (see 4.1).
	3) Disc pressure has slackened.	Check if bowl lock ring is screwed in firmly (see sect. 4.1, no. 18). Check disc count. If necessary, add spare disc.
	4) Bowl is damaged and, therefore, out of balance.	Send bowl to factory or authorized factory repair shop. Do NOT attempt to make your own repairs. Never weld or solder. Bowl is made of heat-treated steels!
	5) Neck bearing springs are weak or broken.	Replace all nine neck bearing springs.
	6) Ball bearings are worn.	Replace damaged bearings. IMPORTANT: As spindle bearings use only ball bearings with increased accuracy of running (see List of Parts).

10. Trouble Shooting

10.1. General

Troubles	Causes	Remedies
10.1.1. The bowl does not come up to rated speed or takes too long to do so (see 3.3).	1) Brakes are on.	Release brakes by turning handles in clockwise direction.
	3) Motor is incorrectly connected.	See wiring diagram.
	4) The fluid clutch does not contain enough oil or clutch is leaky.	Refill oil (see 9.3.). Install new sealing rings (see 9.6).
	5) Bowl is placed too high or too low and rubs against centripetal pump.	Adjust bowl to correct height (see 8.3).
	6) Liquid or solid matter has collected in the sediment collector, resulting in slowing-down of the bowl.	Check frame drain; liquid must flow out freely (see sect. 1). Clean sediment collector underneath the bowl.
	7) Clamp plates are not tight enough; worm wheel slips on the shaft.	Tighten long hex head screws on worm wheel evenly and firmly. Tighten crosswise, by single turns.
	8) Feed liquid supply line is open.	Stop feed liquid supply.
10.1.2. The bowl speed drops during operation.	1) The fluid clutch does not contain enough oil.	Refill oil (see 9.3).
	2) The motor speed drops during operation.	Check line voltage and inspect motor.
10.1.3. The bowl comes up to rated speed too fast (in less than 8 minutes). Motor pulls too high a starting current.	The clutch contains too much oil.	Check oil level (see 9.2). Reduce oil contents.

2) Insert spacer ring 5 in clutch casing and spacer ring 13 in primary wheel (fig. 9/4a). The bevelled edge of each ring must snap into the groove of the bearing neck (fig. 9/4b). This will ensure that the spacer rings cannot move axially.

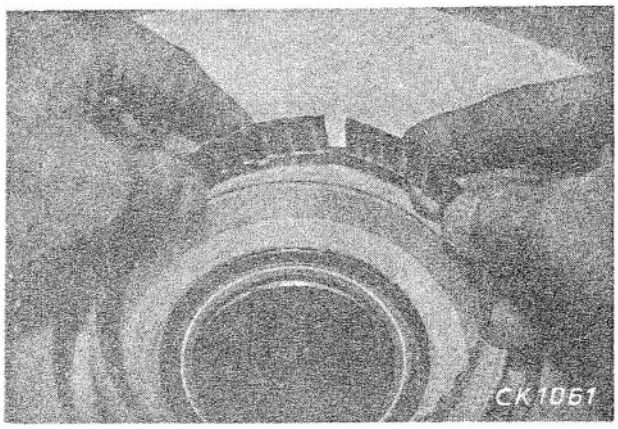

Fig. 9/4a

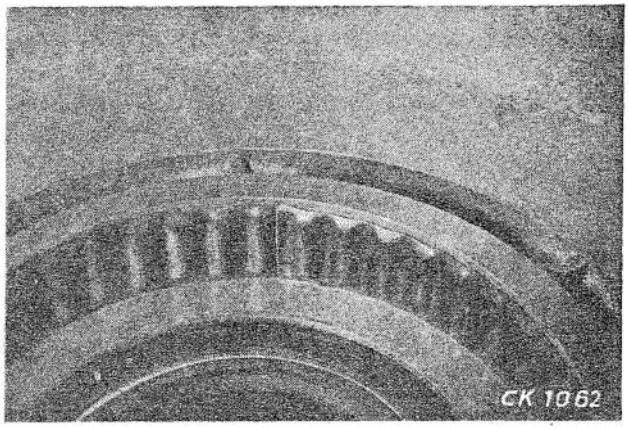

Fig. 9/4b

3) Press ball bearing 6 into clutch casing and ball bearing 15 into primary wheel. Check if the ball bearings pressed into the spacer rings have an absolutely tight fit. If this is not the case, the spacer rings have to be replaced. If necessary, return the clutch to the factory for repair.

4) Apply some oil-resistant sealing compound to oil control ring 25. Then fasten ring to clutch casing with screws 26. Be sure to fit lock washers.

5) Insert gasket 14 in groove of primary wheel. Then fasten cover 18 to primary wheel with screws 19. Be sure to fit spring washers.

6) Press secondary hub with secondary wheel, 16, into clutch casing. IMPORTANT: The surfaces contacting the sealing rings 4 and 17 must be perfectly smooth to ensure oil-tightness of the fluid clutch. If necessary, re-polish contact surfaces.

7) Fasten cam flange 1 to clutch casing with screws 2. Be sure to fit spring washers.

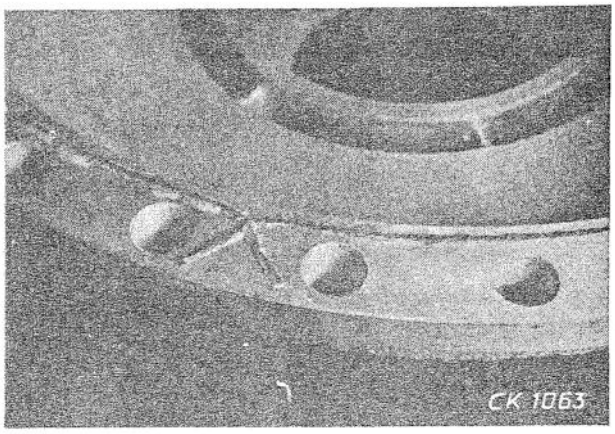

Fig. 9/4c

8) Place Teflon packing cord 9 on sealing surface of clutch casing as shown in fig. 9/4c. Make sure cord ends are crossed. To keep the cord in its place coat it with grease. Sealing surfaces of primary wheel and clutch casing must be in perfect condition; they must not be coated with a sealing compound.

9) Press primary wheel on secondary hub so that the marks on primary wheel and on clutch casing are in line (see sect. 9.5, no. 3). Then screw primary wheel and clutch casing together.

9.5. Dismantling the fluid clutch (fig. 16)

The fluid clutch should not be dismantled in the site. If damage occurs, the clutch should be returned to the manufacturer for repair to assure correct fitting of the spare parts and, hence, proper functioning of the clutch. In the meantime, a spare clutch can be placed at your disposal.

If however, you decide to remove leakage of the clutch in the site, we recommend to check first sealing 17 because it is more easily accessible than sealing ring 4.
After taking the clutch out of the frame (see 8.4.2) remove screws 19 and lock washers and take off cover 18. Now check sealing ring 17 and replace it when its sealing lip is no more soft and elastic.

If, however, sealing ring 4 or the ball bearings have to be replaced, the clutch has to be dismantled in the following manner:

1) Loosen screw 24 and let oil drain.
2) Undo hexagon nuts 11 and remove them with lock washers 10. Then remove screws 7.
3) Press primary wheel off the clutch casing 8 by threading two of the screws 7 into the tapholes of primary wheel 12.
   IMPORTANT: Bear in mind that the fluid clutch has been balanced in the factory. Therefore, be sure to mark both primary wheel 12 and clutch casing 8 before taking them apart, so that, when being re-assembled, these parts will be brought back into their original position.
4) Press ball bearing 15 out of primary wheel 12.
5) Undo screws 2 and remove cam flange 1.
6) Force secondary hub with secondary wheel 16 out of the clutch casing. Be sure not to damage running surfaces for the sealing rings. See also 9.6. no.6.
7) Screw screws 26 out of the clutch casing and remove oil control ring 25.
8) Press ball bearing 6 and sealing ring 4 out of the clutch casing.

9.6. Re-assembling the fluid clutch (fig. 16)

1) Moisten sealing rings. Press sealing ring 4 into the clutch casing by applying the tool shown in fig. 9/3 and then lightly hitting against bolt B. In order to be able to use the tool for pressing sealing ring 17 into cover 18, screw the bolt B into the other side of the disc. Then proceed in the same way as for sealing ring 4. The tool consisting of disc (part no. 3158-9939-000) and bolt (part no. 3170-9877-010) is supplied on special order only.

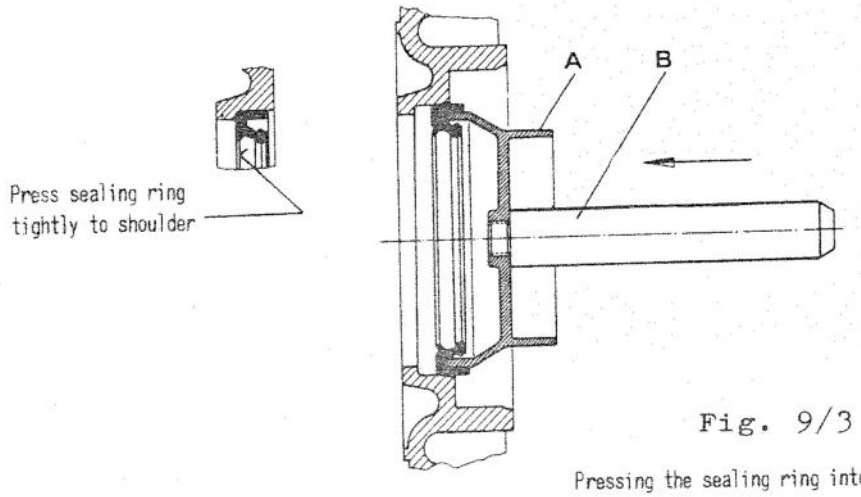

Fig. 9/3

Pressing the sealing ring into clutch casing.

For checking the oil level, proceed as follows:
Remove the ventilation grid so that the oil level indicator plate can be seen. Bring the clutch into such a position that threaded plug A (fig. 9/1) can be removed without oil flowing out. Unscrew threaded plug with a wrench. Then turn clutch until lower edge of taphole is in line with mark on oil level indicator plate (fig. 9/1). In this position, the oil level in the clutch must be up to the lower edge of the taphole, so that the oil begins to overflow. If this is not the case, refill oil (see 9.3).

9.3. Re-filling oil (fig. 9/1)

Remove threaded plug H. Loosen oil fill screw E with wrench F. Then take off the handles from the wrench and continue unscrewing the oil fill screw until it comes off. Now thread oil fill pipe C into the oil fill hole, introduce funnel D and pour in oil. Then check oil level (see 9.2) before replacing oil fill screw including gasket. Use wrench F to firmly tighten the oil fill screw.

9.4. Type of oil

For filling the clutch, use only

HYDRAULIC OIL SHELL TURBO 27

which has proved satisfactory in operation by meeting requirements as regards viscosity, flash point, lubricating properties, compatibility with metals and gaskets, aging, etc.

Each separator is furnished with two 5-litre cans of Shell Turbo 27 Oil.

If this type of oil is not readily available, the following types may be used, however, temporarily only. Do NOT mix different types of oil!

Supplier	Designation
BP Benzin & Petroleum AG.	BP Energol HL 65 EP BP Energol HL 65 Auto-Hydraulik-Öl 65
BV Aral AG.	P 2464 H T U
Caltex Oil	Regal Oil A (R & O)
Esso AG.	Teresso EKV 43 Teresso 43
Gasolin-Nitag AG.	Spezialöl BGV
Mobil Oil	Mobil Fluid 120
Rheinpreußen	RHP Renochrom H 9
Sun Oil Anvers	Belsunco Turbogearoil BS 7624
Shell AG.	S 5557 BA 27 Clavus Oil 27

9. The Fluid Clutch

9.1. General

The fluid clutch (Turbo Clutch) gradually brings the bowl to its rated speed, eliminating premature wear on gear parts and on motor. The motor power is transmitted by means of a closed oil circuit between a primary wheel driven by the motor shaft and a secondary wheel driving the worm wheel shaft of the separator.

The oil level in the fluid clutch must be up to the mark of the oil level indicator plate, to ensure that the bowl comes up to its rated speed within its starting time (see sect. 3.3).

When less oil is filled in, slippage in the clutch will be too great and starting time of the bowl too long. If the clutch contains too much oil, the starting time of the bowl will be too short, resulting in overload of motor and gear.

The oil in the clutch has to be changed every 5,000 working hours. It should be changed when the ball bearings of the worm spindle and of the worm wheel shaft are being replaced.

The clutch requires

approx. 6,5 litres of oil when using a 1455 rpm motor,
approx. 5,35 litres of oil when using a 1745 rpm motor.

Be sure to use only the type of oil specified in sect. 9.4.

9.2. Checking the oil level

The oil level has to be checked before the initial start-up of the separator and every time after re-filling of oil. Furthermore, the oil level should be checked once a month since in the course of time small oil losses may occur.

Before checking the oil level, make sure oil has cooled down.

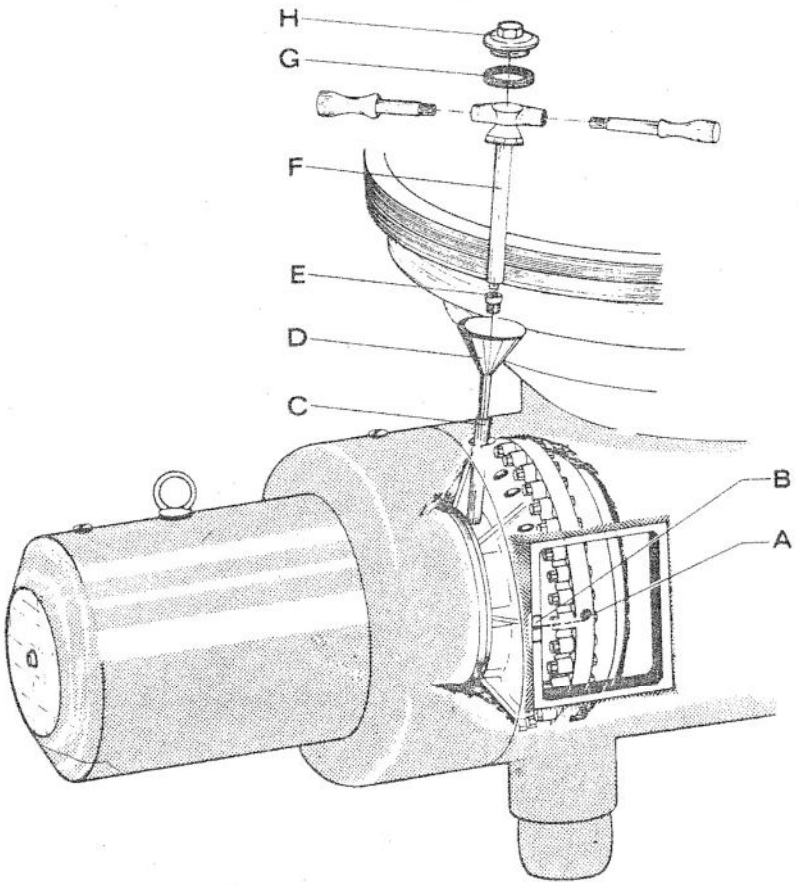

Checking the oil level:

Mark on oil level indicator plate B must be in line with lower edge of taphole A. Oil level must be up to the lower edge of taphole A.

Fig. 9/1

8.5. Re-assembling the horizontal gear parts (fig. 15)

For re-assembly proceed in reverse order of removal (see sect. 8.4). The following has to be kept in mind:

1) The worm wheel with clamp plates, 10 (fig. 15), has been balanced in the factory as complete assembly. Except for the clamp plates, component parts of the assembly must NOT be replaced individually, since this could lead to unbalance.

2) When mounting the worm wheel assembly with clamp plates, be sure to push worm wheel towards brake side until it rests against the shoulder of the worm wheel shaft 25. This will assure correct positioning of the toothed rim with reference to the worm.

3) The worm wheel must be firmly tightened to the worm wheel shaft, accomplished by tightening screws 10c in both clamp plates. Tighten screws crosswise, by single turns, to make sure clamp plates are drawn together evenly.

4) IMPORTANT: When toothed rim is worn, the entire worm wheel assembly with clamp plates, 10, has to be replaced. Worm 5k (fig. 14) should be replaced at the same time, because this is no longer in perfect condition either and could thus cause premature wear to the new worm wheel.

5) Before installing the fluid clutch and the brake drum, apply a thin film of grease to the tapered ends of the worm wheel shaft. Then clean and wipe dry tapered ends with a rag. Clean also inside of hubs of fluid clutch and brake drum very carefully to assure proper fitting.

6) The fluid clutch and the brake drum must be firmly clamped to the worm wheel shaft. This is accomplished by tightening Allen screws with torque indicating wrench 416 (fig. 20). Tighten the screws consecutively, by single turns. Give the final tightening at 4 - 4.1 mkp on the torque scale. When installing the fluid clutch, be sure to place cup spring 5 under washer. For correct arrangement refer to fig. 15.

7) When installing the motor, make sure that there is a clearance of 4 mm between cam hub 31 and fluid clutch (fig. 15 or 16). The distance has to be checked over after replacement of motor, of cam hub, of fluid clutch or of worm wheel shaft. If necessary, adjust the distance by displacing the cam hub on the motor shaft. After doing so, drill a new hole into motor shaft for threaded pin 30.

8) Before running in new gear parts, apply a thin film of molybdenum disulfide paste to the gearing of the worm wheel. Then turn spindle in clockwise direction - by hand - for about 5 minutes to make the paste penetrate into the surfaces of the teeth.

9) Fill gear chamber with the oil specified in sect. 2. Oil level must be slightly above middle of sight glass.

10) To run in new gear parts (worm wheel and worm) let separator run - without bowl - for about one hour.

11) For reasons of safety, replace ball bearings fitted on worm wheel shaft and on worm spindle every 5,000 working hours.

8.4.3. Removing the worm wheel shaft

Remove fluid clutch (see sect. 8.4.2).

Loosen oil drain screw and drain oil into oil cup. Remove revolution indicator housing (fig. 8/1a).

Loosen hex head screws in clamp plates of worm wheel. Slacken clamp plates and push worm wheel to the left (fig. 8/1b, 8/1c).

Undo hex head screws 18 and remove fan cover 17.

Use socket wrench 416 to unscrew Allen screws 13. Ta off disk 12.

By means of puller 419, wit draw brake drum assembly, 11 a-d, from cone of worm wheel shaft.

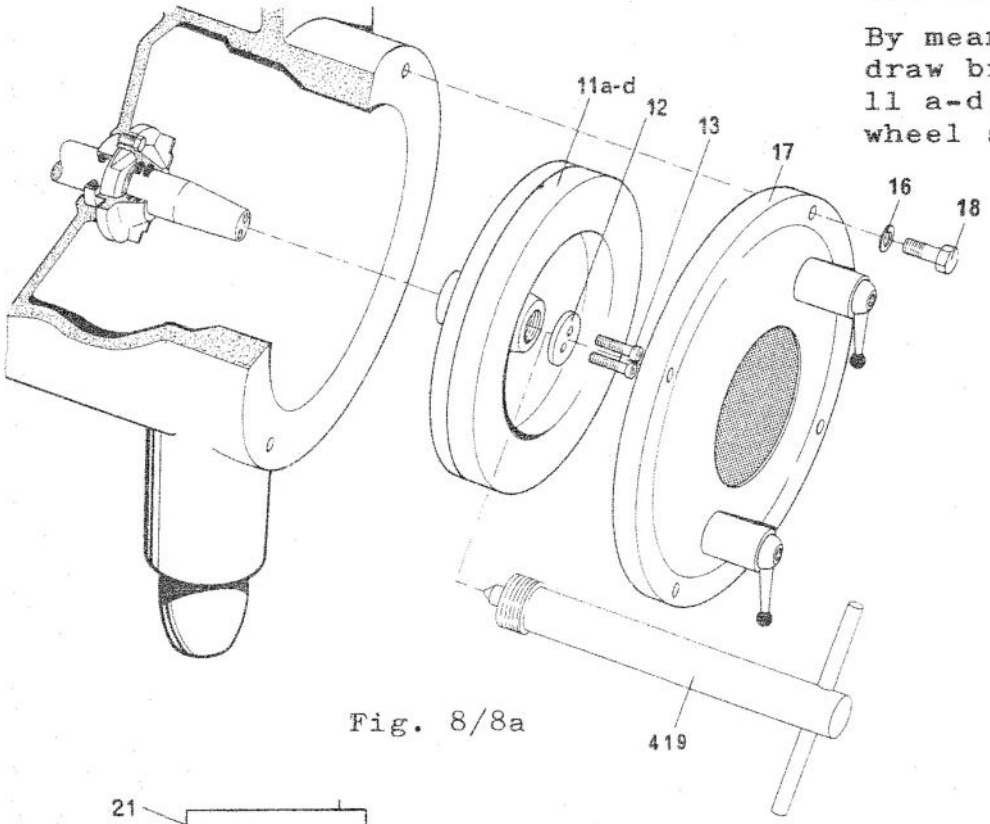

Fig. 8/8a

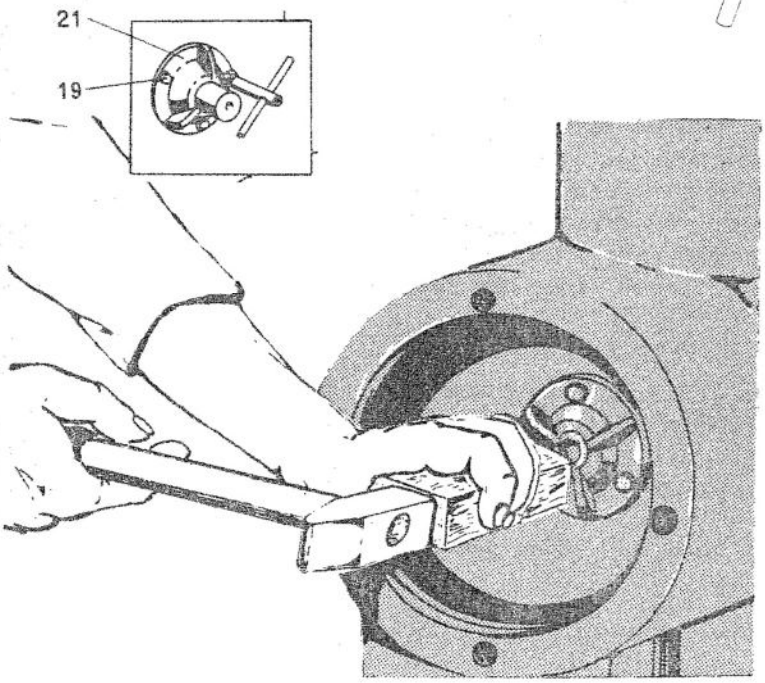

Fig. 8/8b

Screw hex head screws 19 out of bearing cover 21 (brake side). Place a hard wood block against worm wheel shaft end, on motor side, and rap it gently with a hammer to drive out the shaft together with ball bearing, nut, and bearing cover towards brake side.

When shaft has completely loosened from ball bearing, on motor side, remove it by hand. While doing so, hold worm wheel to prevent damage to gear teeth. Then take worm wheel assembly with clamp plates out of gear chamber.

8.4. Removal of the horizontal gear parts

8.4.1. Removing the motor

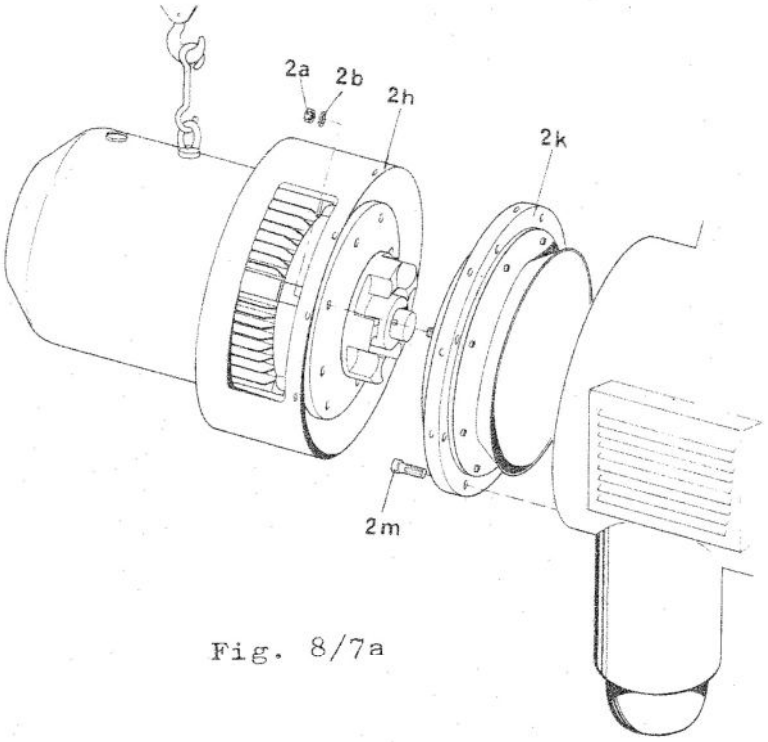

Fig. 8/7a

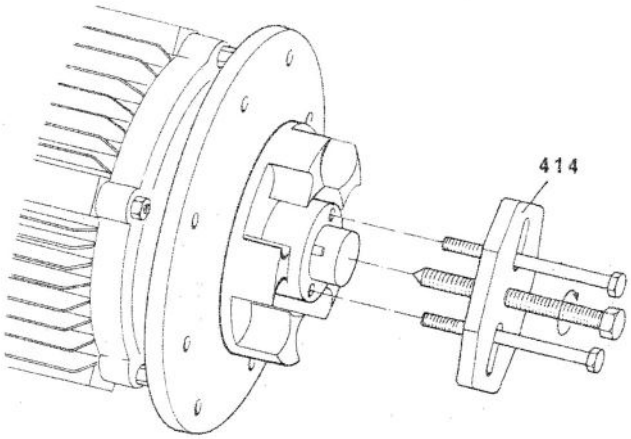

Fig. 8/7b

Remove lead-in wires from motor terminals. Unscrew hex head screws 2g and move cover 2h sidewards. Sling motor to hoist and tighten carrying rope. Then unscrew hexagon nuts 2a through opening of cover which can be turned on the flange. Take off lock washers 2b.
Use hoist to lift off motor together with cam hub (see fig. 8/7a).

For removing cam hub from motor shaft end use puller 414 (fig. 8/7b).

8.4.2. Removal of the fluid clutch

After removing the motor, undo Allen screws 2m and take off flange 2k (see fig. 8/7a).

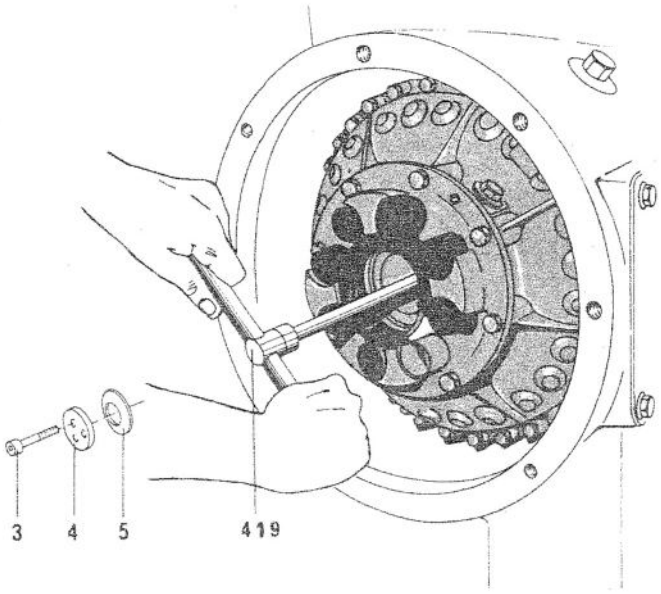

Fig. 8/7c

Loosen Allen screws 3 (fig. 8/7c) with torque-indicating wrench 416 (fig. 20) by consecutively giving each screw a quarter of a turn until tension of cup spring 5 slackens. Then screw out Allen screws all the way and remove washer 4 and cup spring 5.

It may happen that one of the three Allen screws can only be loosened by applying great force. In this case re-tighten the two remaining screws so that all three screws are equally tight. Then start loosening again as described above.

Be sure the socket of the wrench 416 is not worn!

To remove fluid clutch from cone of worm wheel shaft use pulling device 419.

Undo screws 11p and remove neck bearing protection cap 11m. Then turn bottom bearing threaded piece in clockwise direction until bowl is adjusted to proper height.

After adjustment, replace bottom bearing cap including gasket 2 (fig. 14) and close tightly. Bottom bearing cap serves as a lock nut.

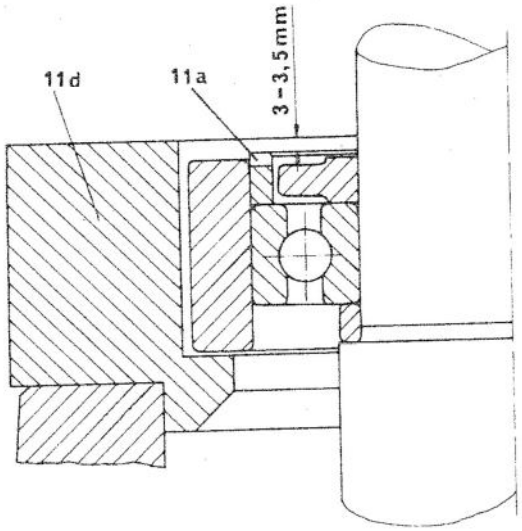

Fig. 8/6

Every time the bowl has been lowered or raised, remove bowl, spindle cap, and protection cap, unless these parts have already been removed before raising the bowl.
Check if the distance between cams of distance ring 11a and the neck bearing bridge 11d (fig. 8/6) is 3 to 3,5 mm.

If the distance is smaller, file the cams to proper dimension. If the distance is greater, increase height of cams by welding or check with the factory for a new distance ring with properly sized cams.

After checking the clearance between distance ring and neck bearing bridge, re-install the above-mentioned parts. When installing the operating-water feed, check to be sure that gasket 38 (fig. 13/1) is in perfect condition.

Bear in mind that after fastening the neck bearing protection cap with screws, the distance ring and, hence, the ball bearing 5p (fig. 14) will be under pressure until the spring column 7 in the bottom bearing is compressed by the weight of the bowl.

8.3. Bowl Height

8.3.1. Checking the bowl height

The bowl height is adjusted at the factory before the separator is shipped. It must be checked for re-adjustment before the first start of the separator, after re-assembling the vertical gear parts, after installing a different bowl or a different centripetal pump or when the centripetal pump shows any grinding marks.

Prerequisite to correct bowl height adjustment is that

a) the bowl is properly closed (the "O" marks on bowl lock ring and on bowl bottom must be in line),

b) the hood is properly seated on the sediment collector and the hex head screws 41b (fig. 13/1) are tightened securely,

c) the handle connection piece (fig. 8/5) is fastened tightly.

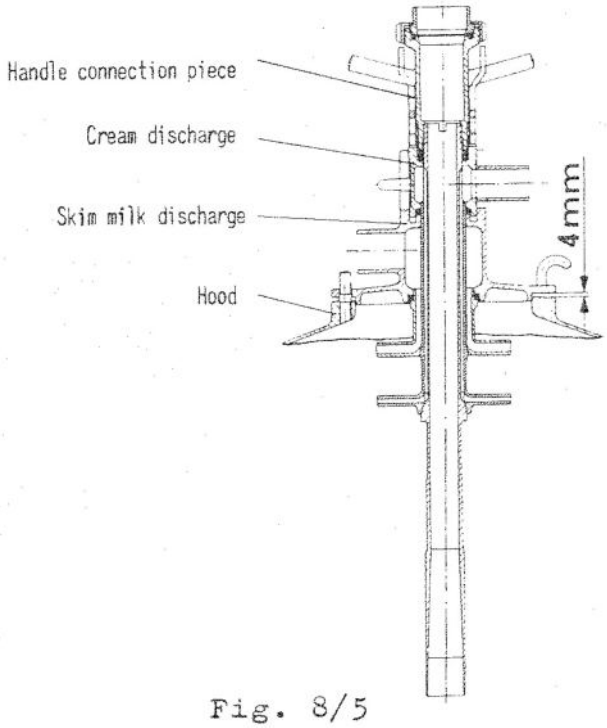

Fig. 8/5

The bowl height is correct when after loosening of the cap nuts, the skim milk discharge together with the cream discharge and the handle connection piece can be raised so far that there is a distance of 4 mm between upper rim of hood and contact surface of skim milk discharge.

If the distance does not conform to this measurement, the bowl height has to be re-adjusted.

8.3.2. Re-adjusting the bowl height

For re-adjustment of bowl height proceed as follows:

Unscrew bottom bearing cap 1 (fig. 14). Adjust bowl height by turning bottom bearing threaded piece 6 (fig. 8/5). A full turn of the bottom bearing threaded piece to your Right or to your Left raises or lowers the bowl by 2 mm.

If the distance shown in fig. 8/5 is greater than 4 mm, the bowl is too high. Lower the bowl by turning the bottom bearing threaded piece in counter-clockwise direction.

If the distance shown in fig. 8/5 is less than 4 mm, the bowl is too low. Raise the bowl by turning the bottom bearing threaded piece in clockwise direction.

If the bowl has to be raised by more than 1 mm, then the bowl has to be removed (see 4.3). Remove operating-water connection and take out bush 37 (fig. 13/1). Undo screws 14 and remove operating-water feed 15. Take off spindle cap 5t (fig. 14).

8.2.2. Assembling the neck bearing bridge

The upper ball bearing of the spindle is contained in pressure ring 11c which is held by nine radially arranged, evenly distributed springs 11g

1) Insertpressure ring 11c in neck bearing bridge 11d in such a manner that the nine recesses of the pressure ring face the nine tapholes of the neck bearing bridge.

2) Grease spring pistons 11h thoroughly. Fit neck bearing springs 11g into the nine spring pistons. Then put the spring pistons into threaded plugs 11f.

3) Screw the threaded plugs together with neck bearing springs and spring pistons into the tapholes of neck bearing bridge, and tighten.

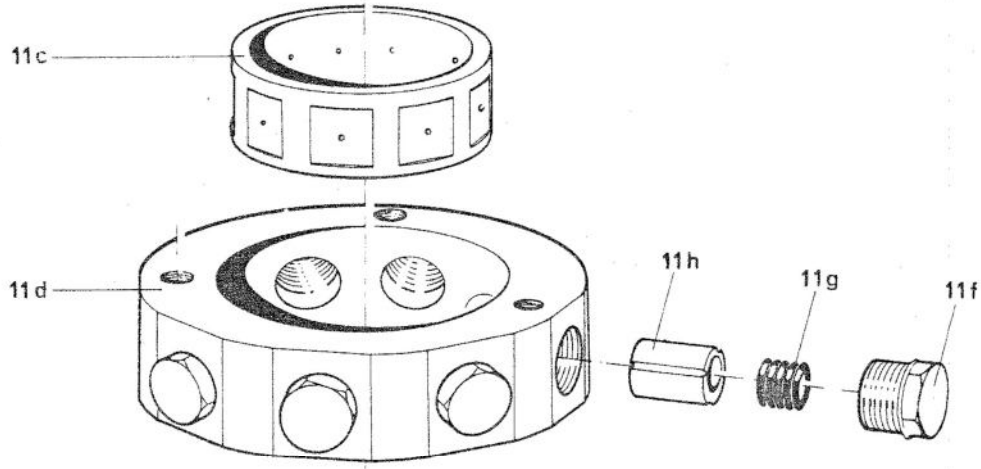

Fig. 8/4a

8.2.3. Installing spring column into bottom bearing

1) Slide cup springs 7 on bolt of bottom bearing threaded piece 6 as illustrated in fig. 8/4b.

2) Slip bottom bearing pressure piece 8 over spring column.

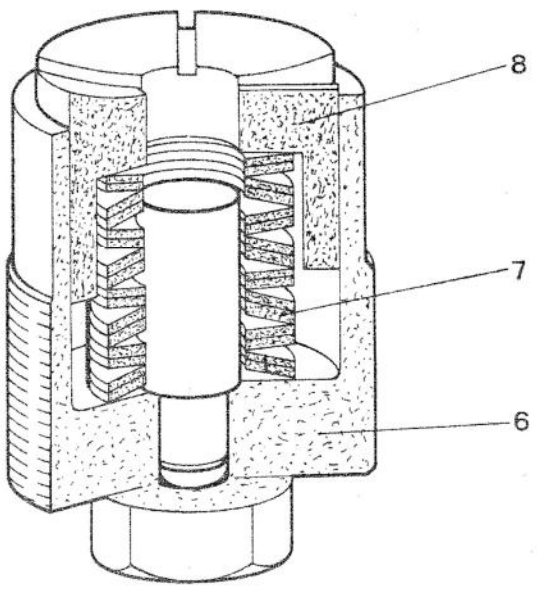

Fig. 8/4b

8.2. Re-assembly of vertical gear parts (Fig. 14).

For re-assembly proceed in reverse order of removal (see 8.1) and according to the instructions given in sect. 8.2.1 - 8.2.3.

8.2.1. Important hints for re-assembly

1) Thoroughly clean gear chamber before re-assembling the vertical gear parts.

2) Check condition of ball bearings before fitting them on the worm spindle.
   IMPORTANT: Use only high-speed precision ball bearings (see List of Parts).

   For reasons of safety the ball bearings of the worm spindle and the worm wheel shaft have to be replaced every 5,000 working hours.

3) Before fitting ball bearings, ball bearing protection rings 5d and 5g, and ring 5n heat these parts in oil to approx. 80°C (176°F).

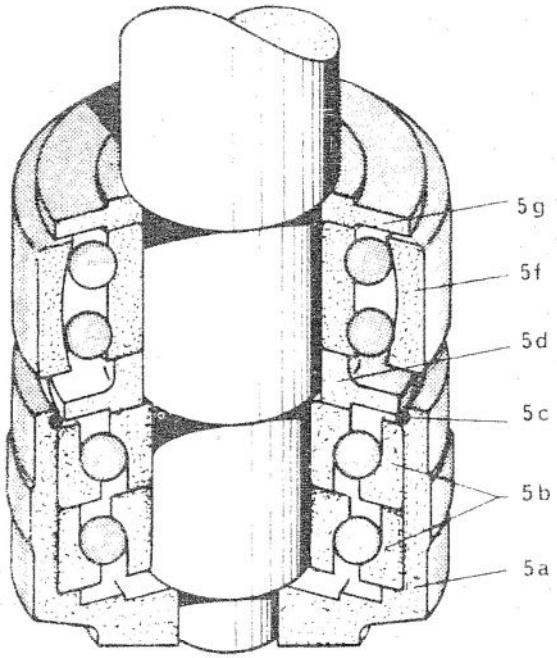

Fig. 8/3

4) If one of the angular contact ball bearings 5b needs replacement, be sure to replace always both of them. Note that angular contact ball bearings may be loaded axially in one direction only. They must be fitted in as shown in fig. 8/3. The narrow rim of the outer ring of each bearing must be on top. Faulty mounting will inevitably result in damage to bearings.
   For installation proceed as follows: Slide the angular contact ball bearings on the spindle, slip snap ring 5c over the ball bearings and let ball bearings cool down. Then fit bottom bearing pressure housing 5a over the ball bearings, and press snap ring 5c into the groove of the bottom bearing pressure housing.

5) The spindle, with ball bearings attached, must be installed without having to be hit on the upper spindle end and must fit so as to be axially movable by hand. The outer ring of the pendulum ball bearing must fit snug in the bottom bearing housing. If it does not, then smooth the inside of the bottom bearing housing with an emery cloth to remove the burrs which might be the cause for a bad fit of the outer ring.

6) When worm 5k is worn and needs replacement, the entire worm wheel assembly with clamp plates, 10 (fig. 15) should be replaced at the same time, because this assembly is no longer in perfect condition either and could thus cause premature wear to the new worm.

7) When installing the neck bearing bridge assembly 11c-h, make sure that the gaskets 11b and 11k are in good condition. Be sure to install distance ring 11a.

8) IMPORTANT: After re-assembly of the vertical gear parts, check bowl height for possible re-adjustment (see 8.3).

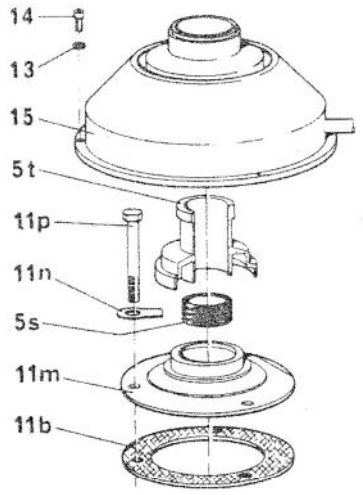

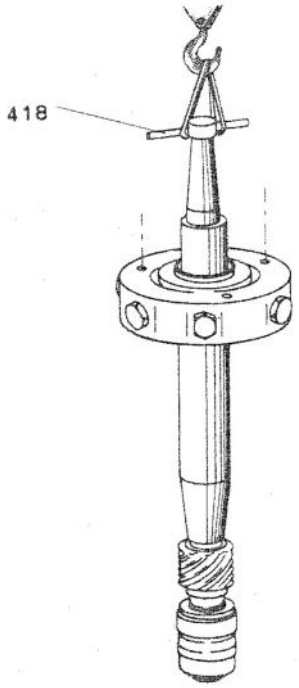

Fig. 8/2a

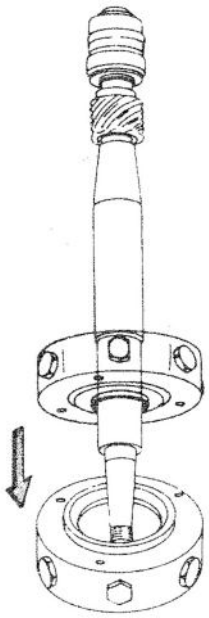

Fig. 8/2b

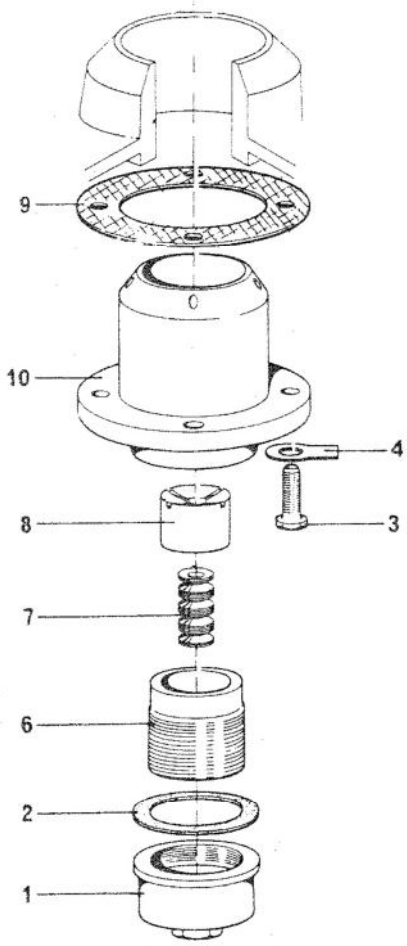

Fig. 8/2c

Fig.8/2a:

Take off operating-water connection and remove bush 37 (fig. 13/1).

Undo screws 14 and remove operating-water feed 15 and spindle cap 5t. Straighten safety washers 11n and unscrew hex head screws 11p from the neck bearing. Take off protection cap 11m and spindle spring 5s.

Screw tool 418 onto worm spindle and lift out spindle together with neck bearing bridge.

Fig. 8/2b:

To remove neck bearing bridge, hold spindle in inverted position, upper end down, and tap spindle lightly against a wooden surface. Neck bearing bridge will then slide off.

Fig. 8/2c:

Unscrew bottom bearing cap 1 and remove gasket 2. Undo bottom bearing threaded piece 6 by screwing it downwards, and remove it together with spring column 7 and bottom bearing pressure piece 8.

Should the case arise that bottom bearing housing 10 has to be replaced then proceed as follows: Straighten safety washers 4 and undo hex head screws 3. Take two of these screws and thread them into the tapholes of the bottom bearing housing. By doing so, the bottom bearing housing will be pressed out of the frame.

8. The Gear

8.1. Removing the vertical gear parts

After disassembling the bowl, loosen oil drain screw and drain oil into oil cup.

Undo hex head screws from revolution indicator housing and remove housing (fig. 8/1a).

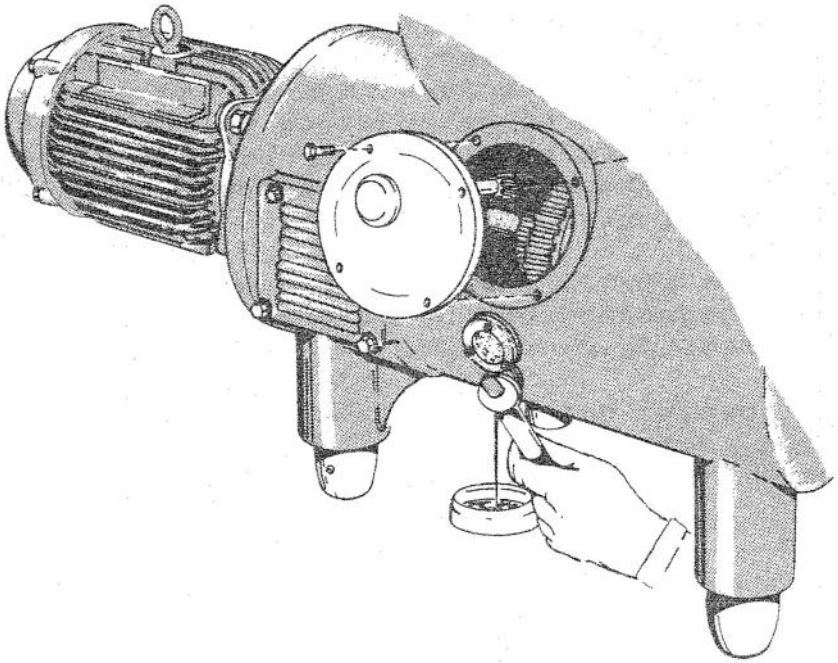

Fig. 8/1a

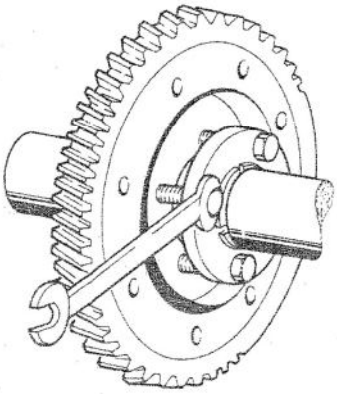

Fig. 8/1b

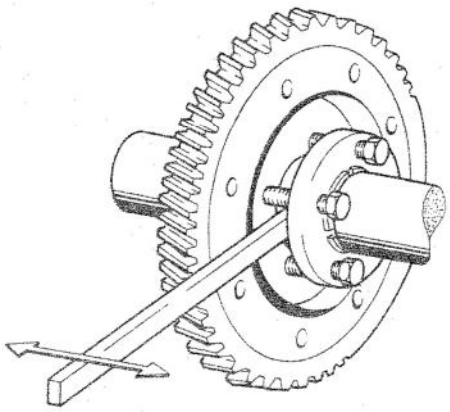

Fig. 8/1c

Loosen hex head screws in clamp plates of worm wheel (fig. 8/1b). Then slacken clamp plates until worm wheel can be moved on worm wheel shaft (fig. 8/1c). Push worm wheel to the left.

6.2.2. Complete solids ejection (complete de-sludging)

For automatic chemical circulation cleaning upon completion of milk treatment a special type timing unit is needed. If this type is not available, complete ejections can be initiated manually with the Unit TVA 2-M. For this purpose, selector switch "Hand-O-Automatic" is to be set to "Automatic".

Complete sediment ejections during chemical circulation cleaning are to be initiated by pressing push button "Complete de-sludging".

Provided that the electrical installation is properly carried out (see circuit diagram of timing unit) the feed pump(s) is (are) automatically switched off during complete ejection initiated by pressing push button "complete de-sludging" and put again into operation approx. 1 minute after complete solids ejection. Interruption of the liquid supply to the bowl by stopping the feed pump is necessary for the recovery of the bowl speed which drops during complete ejection.

After the bowl is re-filled (check rising of discharge pressure), a further complete ejection can be performed by pressing again push button "complete de-sludging".

Should the feed pump(s) not be switched off automatically during complete ejection, switch off pump(s) manually and re-start it (them) one minute after complete ejection.

7. Cleaning-in-Place

The self-cleaning separator is included in the C-I-P system of the plant. Itscleaning frequency is adapted to that of the pasteurizers.

After milk processing, the residual milk is displaced and the whole equipment thoroughly flushed with water. The flushing is followed by two sediment ejection procedures, accomplished by pushing the button "Complete de-sludging" at the timing unit TVA 2-M.

Both the caustic solution circulation and the acid solution circulation are followed by flushing with water and subsequently by two "Complete de-sludgings" each.

During the C-I-P process, the constant pressure valve incorporated in the skim milk line should be throttled repeatedly by actuating the push button "overflow". This will cause the centripetal pump chamber of the separator to overflow, resulting in thorough flushing of the hood and the sediment collector. If the separator is not equipped with a constant pressure valve, the skim milk valve should be throttled several times by hand.

6.2. Solids ejection (de-sludging)

6.2.1. Partial solids ejection (partial de-sludging)

Partial solids ejection means partial emptying of the sediment space of the bowl. The milk supply to the bowl is not cut off during partial ejection.

For partial ejection, the operating-water inflow is interrupted briefly. The bowl is opened for so short a period of time that only part of the solids is ejected from the sediment space. The duration of operating-water feed interruption (= duration of partial ejection) depends on the amount of solids to be removed (see 5.2.2.1, no. 2).

The partial sediment ejections are performed with the timing unit (see 5.2) at pre-determined intervals.

After having changed over to milk treatment, the selector switch has to be set to "Automatic". When the time adjusted at the timing relay "Separation" has elapsed, the first partial ejection takes place. The timing relay "Pre-flushing" is to be set so as to assure opening of the solenoid valve D "Flush-water" 10 seconds before partial ejection takes place. At the same time solenoid valve B "Operating water" closes and solenoid valve A "Sealing water" opens.

The water injected into the sediment collector will prevent the sediment from becoming baked-on.

Timing relay "partial de-sludging" is to be adjusted so as to ensure closing of solenoid valve A "sealing water" for about 2 seconds. This causes the bowl to open and to eject 5 litres of sediment. Then sealing-water valve A opens again. Solenoid valve D for flush-water supply remains open during solids ejection and closes about 60 seconds after the ejection process. The period of time this valve is to remain open <u>after</u> solids ejection is adjustable by means of timing relay "subsequent flushing". When solenoid valve D for flush-water supply closes, solenoid valve B for operating-water opens and solenoid valve A for sealing water closes.

The liquid obtained from a partial ejection process (5 litres of sediment and 30 litres of flush water) is collected in the sterilizing tank. The tank is capable of holding the liquid obtained from three partial ejections.

After giving 1 kg of alkaline detergent into the sterilizing tank, the liquid is heated up with steam to 95°C and kept at this temperature for 10 minutes. The liquid can then be sent to the sewer.

Thanks to partial ejection, the milk processing time of the separator is virtually unlimited. The bowl should however be dismantled once a month for a regular check-up. On this occasion, the guide surfaces and threaded areas are to be cleaned and wiped dry and then lightly greased with the lubricating paste supplied.

and there is a maximum pressure in the skim milk line. To overcome this difficulty, a cream pump with a larger diameter has to be installed. If, however, the separator is already equipped with the largest dia. cream pump, the counter-pressure of the equipment following the separator has to be reduced or a booster pump has to be installed.
Bear in mind that cream with a very high b.f. content i.e. extremely viscous cream can lead to incorrect flowmeter reading inasmuch as it lifts the measuring rod to a higher level than that indicated by normal cream flow.

If overflow occurs while the valves are open, the diameters of the built-in centripetal pumps prove to be too small. In this case, check with the factory for larger diameter centripetal pumps and reduce the feed rate for the time being. For centripetal pump dimensions refer to page 18/1.

If there is constant overflow in spite of a low skim milk discharge pressure, check condition of gaskets in centripetal pump chamber cover and in skim milk discharge and check whether overlapping edges of centripetal pump chamber cover and of skim milk discharge are damaged at the sealing points.

In some cases, especially when using heaters with a low back pressure it may be suitable to install in the line after or ahead of the heater a throttling valve and set it to about 22 psi in order to ensure foamfree operation of the separator.

The separating temperature should be about 40°C (104°F). If the milk has a tendency to precipitate too great an amount of albumin, a separating temperature of about 35°C (95°F) may be more suitable.

Possible causes for inefficient separation:

1) Unfavourable pre-treatment of the milk (pumps, agitator, high temperature),
2) Variations in temperature, in bowl speed or in throughflow capacity,
3) Leakage at separating disc,
4) Leakage in discharge lines and at cream pump tube,
5) Re-mixing of cream and skim milk after separation, e.g. caused by leaking cocks in pipe lines connected for drink milk production During separation, the drain valve in the connection line must be open.

Skim milk samples should be taken at the screwed union of the skim milk discharge.

If the trouble cannot be found with the separator or with the equipment ahead of the separator, check condition of chemicals used to analyse the skim milk. To make a test, fill water instead of skim milk into butyrometers.

6.1. Starting the separator

1) Check if

   a) brakes are released,

   b) oil level is slightly above middle of sight glass,

   c) hex head screws for fastening the hood and cap nuts for fastening the discharge, and the handle connection piece are tightened securely,

   d) skim milk- and cream valves are open,

   e) main valve in operating-water line is open.

2) Switch on the motor and check if revolution indicator disc is rotating.

3) After a starting time of 3 minutes set the main switch embodied in the timing unit from "0" to "1" and the selector switch from "0" to "manual" or to "automatic". If the selector switch has first been set to "manual" to start the system under manual control, then be sure to switch over to "automatic" when changing over to milk processing.

   Adjust valve b (fig. 5/3) so that operating water is fed to the separator at a rate of 450 litres/h. Measure amount of water flowing out of the frame drain.

4) As soon as the bowl has reached its operating speed, which is after about 10 minutes, water can be circulated as it is usually done in dairies.
   Throttle skim milk valve so as to produce the approximate skim milk pressure and adjust cream valve to approximately the desired cream flow rate.

5) After switching over to milk processing proceed as follows:

   Set selector switch of timing unit to "automatic". After having opened the milk feed cock, throttle skim milk valve and, at the same time, adjust cream valve to desired cream flow rate. Continue throttling skim milk valve, while maintaining the desired cream flow rate, until slight overflow occurs. For checking the overflow of the bowl, open inspection cover on the hood only a little.
   The pressure indicated by the pressure gauge at the moment when overflow occurs, is to be considered as the maximum pressure.
   Now open skim milk valve again to obtain a pressure of 4 to 7 psi lower than the maximum pressure. This discharge pressure must be maintained during separation.

   If the separator is equipped with a constant pressure valve, the maximum pump pressure and consequently the operating pressure will be adjusted by means of this valve. Daily re-adjustment will thus be eliminated.

For the maximum back pressure in the connected processing equipment, permissible for the different centripetal pump sizes, refer to page 18/1.

To fully utilize the discharge pressure of the cream pump, e.g. when the separator is used for milk clarification where cream and skim milk are re-combined after separation, adjust the skim milk valve to the highest possible discharge pressure.

When clarifying milk, it may happen that cream with too high a b.f. content emerges from the machine although the cream valve is open

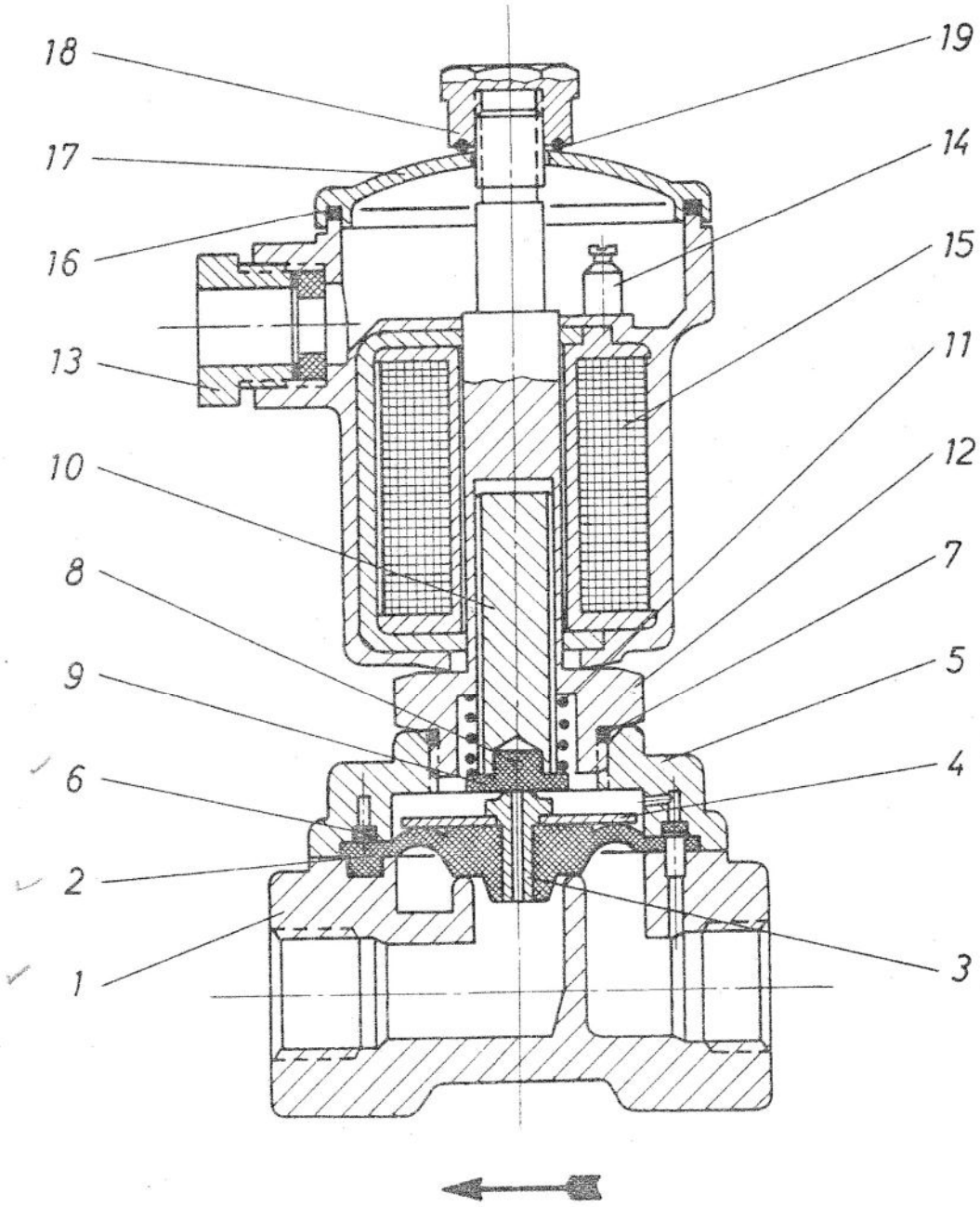

Fig. 17/2

Feed and Discharge Connections and Centripetal Pump

No. in Fig.	Part - No.	Qty.	Part Description
-	1167-2297-020	1	Enclosed feed assembly (1a-d)
1a	0018-3955-300	1	Cone connection D 50 DIN 11851
1b	0013-2845-300	1	Grooved coupling nut F 50 DIN 11851
1c	0007-2211-750	1	Gasket G 50 DIN 11851
1d	1167-2190-020	1	Handle connection piece
-	1167-2299-000	1	Discharge assembly (2a-10)
-	1167-2295-000	1	Skim milk discharge assembly (2a-u)
2a	0007-2210-750	1	Gasket G 40 DIN 11851
2b	0026-5538-400	1	Washer
2c	1167-2385-000	1	Skim milk discharge with valve housing
2d	0007-2279-750	1	Gasket 56/68 Ø x 6
2f	0007-2211-750	1	Gasket G 50 DIN 11851
-	1166-2272-000	1	Valve cone assembly (2g-m)
2g	1166-2278-000	1	Valve cone
2h	0004-5720-840	1	Grooved ring 24/45 Ø x 15
2k	1166-2268-000	1	Washer
2m	0026-2118-300	1	Snap ring
-	1166-2202-000	1	Adjusting screw assembly (2n-t)
2n	0013-2844-300	1	Grooved coupling nut F 40 DIN 11851
2p	1166-2217-000	1	Guide ring
2r	0013-0085-300	1	Knurled nut M 18x1,5
2s	1166-2276-000	1	Adjusting screw
2t	0026-0057-850	1	Washer
2u	0007-2564-750	1	Gasket 170/3
-	8918-2000-080	1	Pressure gauge with clamp, complete (3a-c)
3a	8918-2050-080	1	Pressure gauge
3b	8918-2831-000	1	Clamp
3c	0019-0002-640	1	Handle screw
4	0018-3955-300	1	Cone connection D 50 DIN 11851
5	0013-2845-300	1	Grooved coupling nut F 50 DIN 11851
6	8021-2000-090	1	Flowmeter (for single parts refer to page 18/3)
-	1167-2289-000	1	Cream discharge assembly (7a-s)
7a	0007-2373-840	1	Gasket 35,5/47 Ø x 5
7b	0007-2882-750	1	Gasket 35/47 Ø x 6
7c	1167-2386-000	1	Cream discharge with valve housing
7d	0007-2892-750	1	Gasket 40/52 Ø x 6
-	1166-2272-010	1	Valve cone assembly (7f-k)
7f	1166-2278-010	1	Valve cone
7g	0004-5720-840	1	Grooved ring 24/45 Ø
7h	1166-2268-000	1	Washer
7k	0026-2118-300	1	Snap ring
-	1166-2202-000	1	Adjusting screw assembly (7m-s)
7m	0013-2844-300	1	Grooved coupling nut F 40 DIN 11851
7n	1166-2217-000	1	Guide ring
7p	0013-0085-300	1	Knurled screw M 18x1,5
7r	1166-2276-000	1	Adjusting screw
7s	0026-0057-850	1	Washer
8	0018-3949-300	1	Cone connection D 40 DIN 11851
9	0013-2844-300	1	Grooved coupling nut F 40 DIN 11851
10	0007-2210-750	2	Gasket G 40 DIN 11851
-	1167-2213-020	1	Centripetal pump assembly (11a-c)
11a	1167-2252-000	1	Skim milk pump 140 mm Ø for max. discharge pressure of 71 psi.
11b	1167-2241-000	1	Cream pump 140 mm Ø for max. discharge pressure of 71 psi.

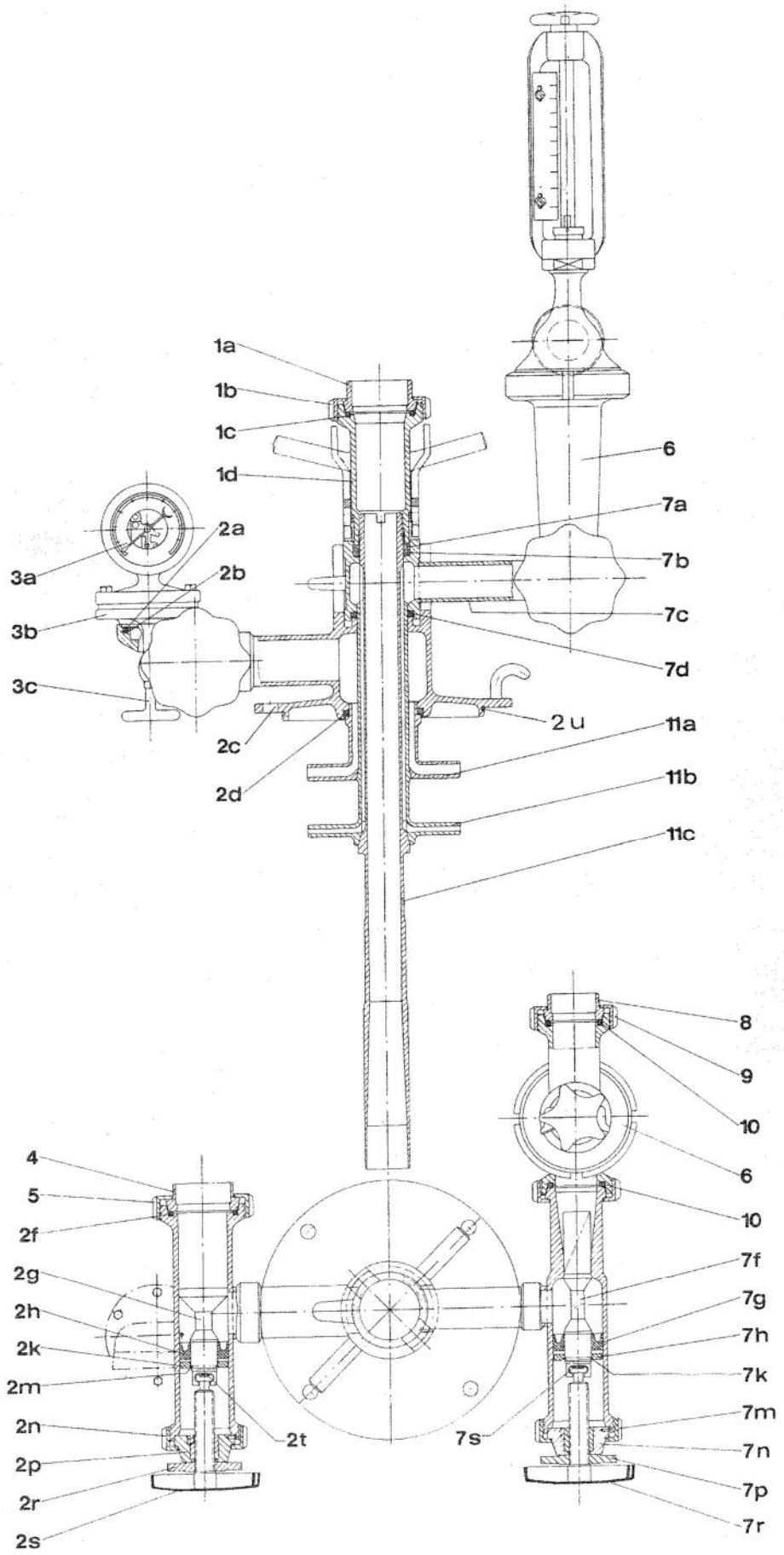
1a
1b
1c
1d
2a
3a
2b
3b
3c
2c
2d
6
7a
7b
7c
7d
2u
11a
11b
11c
8
9
10
6
10
4
5
2f
2g
2h
2k
2m
2n
2p
2r
2s
2t
7s
7f
7g
7h
7k
7m
7n
7p
7r

Fig. 18/1

Flowmeter

No. in Fig.	Part - No.		Qty.	Part Description
	Measuring range			
	700 - 4000 1/h f.cream discharge	6000 - 30000 1/h for feed		
-	8021-2000-090	8022-2100-080	1	Flowmeter assembly (1-16)
1	0019-1731-300	0019-1731-300	1	Handle screw
2	0007-2298-750	0007-2298-750	2	Gasket 13,5/22 Ø x 10
3	0001-0083-820	0001-0082-820	1	Cylindrical sight glass
4	0019-1380-300	0019-1380-300	1	Threaded bush
5	0026-1375-300	0026-1375-300	1	Washer
6	0013-3010-300	0013-3010-300	1	Nut M 35x1,5
7	8021-2003-120	8022-2003-080	1	Outlet pipe
8	-	0007-2341-750	1	Gasket 85/95 Ø x 6
8	0007-2279-750	-	1	Gasket 56/68 Ø x 6
9	0013-2846-300	0013-2847-300	1	Grooved coupling nut
10	8021-2001-150	8022-2001-110	1	Inlet cup
11	8021-2012-010	8022-2112-000	1	Float
12	-	8022-2117-000	1	Scale 6000 - 30000 1/h
-	8021-2017-000	-	1	Scale 700 - 4000 1/h
13	0004-5261-720	0004-5261-720	2	Gasket 4,5/8,5 x 1
14	0019-2478-300	0019-2478-300	2	Lens head screw AM 4x8 DIN 85
15	8020-2002-000	8022-2002-000	1	Intermediate piece
16	-	0007-2211-750	2	Gasket G 50 DIN 11851
16	0007-2210-750	-	2	Gasket G 40 DIN 11851

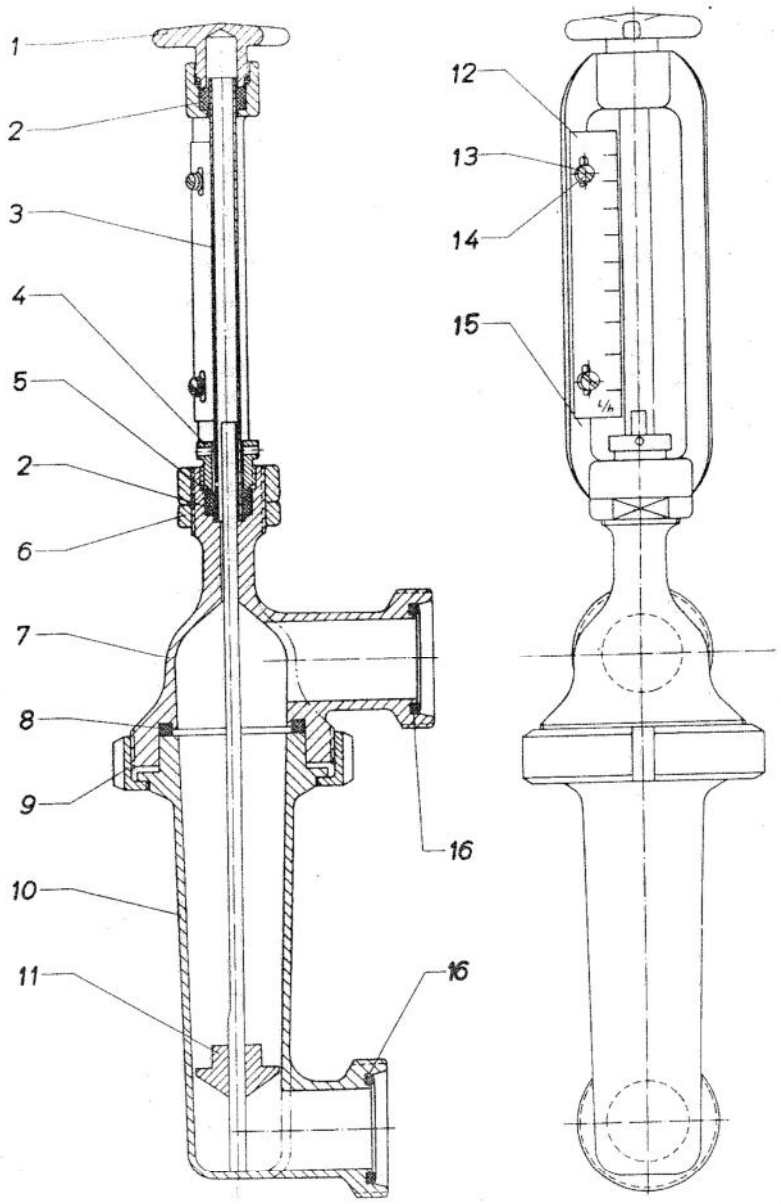

Fig. 18/2

B o w l

No. in Fig.	Part - No.	Qty.		Part Description
-	1167-6600-140	1		Bowl, complete (1-23)
1	0019-1450-400	1		Threaded plug M 42x1,5
2	0007-1970-690	1		Gasket 26,5/35 Ø x 5,25
3	3158-6280-010	1		Valve in bowl bottom (3a-f)
3a	3158-6279-000	1		Threaded plug
3b	3158-6282-000	1		Valve housing
3c	0007-2503-750	1		Gasket 11,3/2,4 Ø
3d	0004-5502-850	1		Sealing disc
3f	0007-2920-750	4		Gasket 23,3/2,4 Ø
4	1167-6501-000	1	*	Sliding piston
5	0007-2962-750	1		Gasket 611/635 Ø x 12
6	0019-6120-400	10		Allen screw M 8x15 DIN 912
7	1167-6604-020	1	*	Bowl bottom, complete
7a	3117-6609-010	1	**	Arresting piece
7b	0019-2233-400	1	**	Cylindrical screw AM 5x12 DIN 84
7c	1167-6598-000	1	**	Ring
7d	0019-8341-400	4	**	Allen screw M 6x20 DIN 6912
8	3176-6631-010	1	*	Lock ring Tr 670 x 14 left-hand thread
-	1167-6660-010	1	*	Set of discs (9a-f)
9a	1167-6662-010	1		Bottom disc
9b	1167-6663-040	4		Disc
9c	1167-6663-020	173		Disc
9d	1167-6664-010	1		Compensating disc
9f	1165-6666-000	1		Top disc
10	0007-2586-750	1		Gasket 109/10 Ø
11	1167-6620-000	1	*	Distributor
12	0007-2470-750	1		Gasket 555/567 x 6
13	1167-6448-000	1		Sealing ring
14	0007-2546-750	1		Gasket 600/5 Ø
15	0007-2969-840	1		Gasket 591,5/10,3 x 11
16	0013-2964-400	1		Spindle nut
17	1167-6610-070	1	*	Bowl top
18	1167-6650-020	1		Separating disc
19	1167-6670-010	1		Upper disc (specially shaped)
20	1167-6420-000	1		Retaining ring
21	1167-6645-000	1		Centripetal pump chamber cover
22	0007-2854-750	1		Gasket 190/202 Ø x 6
23	1165-6631-000	1		Lock ring Tr 215x6 left-hand thread

* This part can only be replaced by WESTFALIA or in a repair shop authorized by WESTFALIA, because of special re-fitting to machine and possible re-balancing of bowl.

** This part is included in the previous "complete" part, but it is also available as separate item.

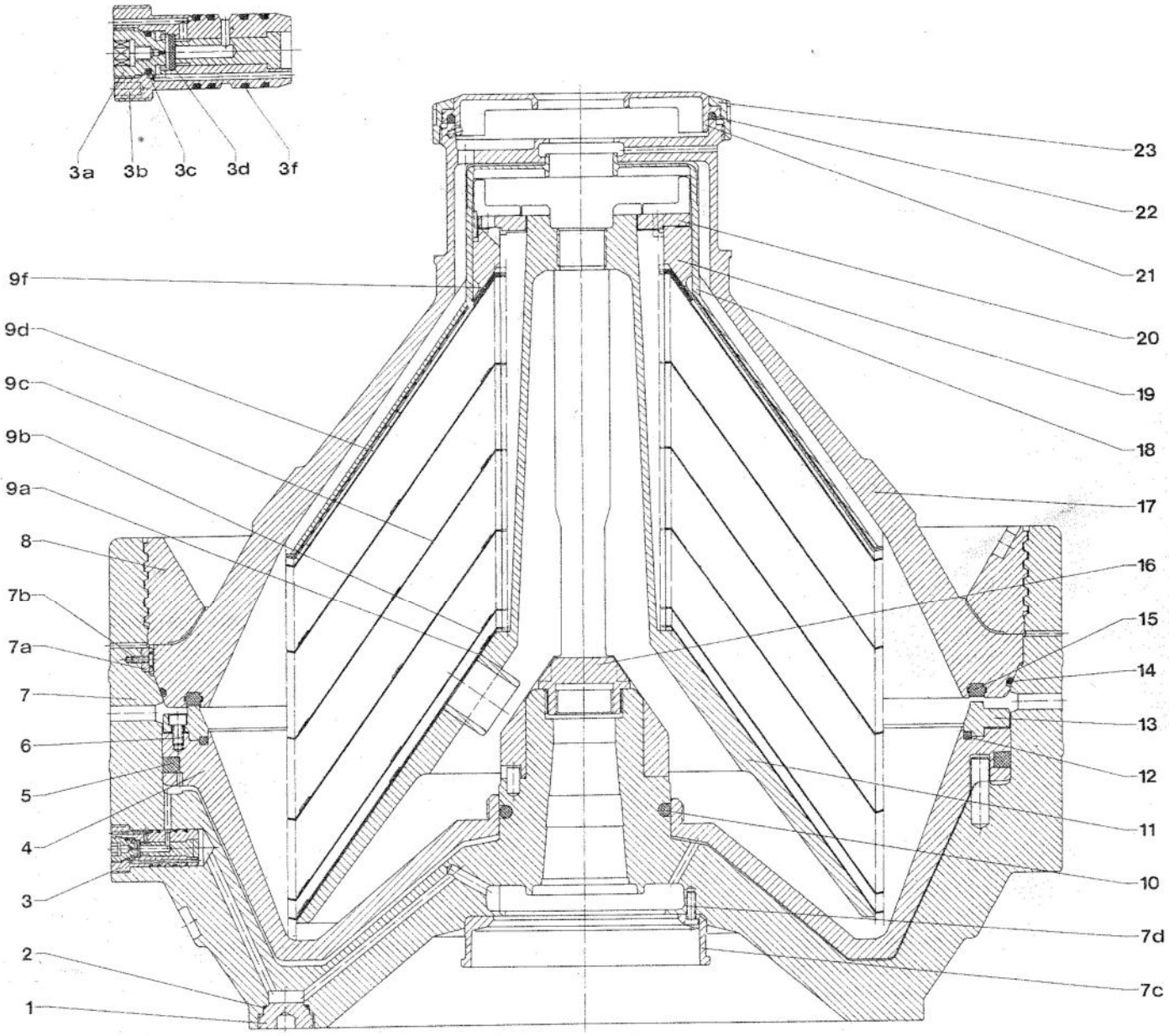
3a
3b
3c
3d
3f
23
22
21
20
19
18
17
16
15
14
13
12
11
10
7d
7c
9f
9d
9c
9b
9a
8
7b
7a
7
6
5
4
3
2
1

Fig. 19

Tools and Accessories

All the parts mentioned in the packing list furnished with the separator should be found in the packing case.

No. in Fig.	Part - No.	Qty.	Part Description
401	0003-3774-320	1	Allen wrench 4 DIN 911
-	0003-3775-320	1	Allen wrench 5 DIN 911
-	0003-3776-320	1	Allen wrench 6 DIN 911
-	0003-3777-320	1	Allen wrench 8 DIN 911
-	0003-3778-320	1	Allen wrench 10 DIN 911
-	0003-3780-320	1	Allen wrench 14 DIN 911
402	0003-4080-110	1	Single-ended wrench 50 (for spindle nut)
403	0003-4202-320	1	Double-ended wrench 12x13 DIN 3110
-	0003-4205-320	1	Double-ended wrench 17x19 DIN 3110
-	0003-4208-320	1	Double-ended wrench 22x27 DIN 3110
-	0003-4209-320	1	Double-ended wrench 24x30 DIN 3110
-	0003-4211-320	1	Double-ended wrench 27x32 DIN 3110
-	0003-4222-320	1	Double-ended wrench 36x41 DIN 3110
404	0003-3846-000	1	Pivoted hook wrench NW 25-90
405	0003-0200-000	1	Mallet
406	0003-0303-000	1	Splash cover
407	0003-0256-890	1	Oil gun
408	0003-0168-890	1	Funnel
409	0003-0274-000	1	Oil cup
410	0003-4695-960	1	Brush 70x100x500
411	0003-4667-800	1	Rotary brush 26/41 x 216
412	0003-4690-960	1	Brush 50x125x285
413	0003-4540-960	4	Cylindrical brush 10x40x160
-	0003-4544-960	4	Cylindrical brush 15x85x285
-	0003-4551-800	1	Cylindrical brush 20x100x800
-	0003-4552-960	1	Cylindrical brush 45x110x270
414	1087-9910-010	1	Pulling device (for cam hub, fluid clutch)
415	0018-3430-030	1	Pipe M 22x1,5x200 (for fluid clutch)
416	0003-0590-000	1	Socket wrench with torque indicator
417	0003-0601-320	1	Socket 8
418	0984-9862-000	1	Lifting device for spindle
419	1166-9910-010	1	Pulling device (for fluid clutch)
420	0003-4636-050	1	Screwdriver 4,5x125
-	0003-4637-050	1	Screwdriver 8x150
421	0003-4291-110	1	Ratchet wrench 60
425	0003-0353-000	1	Annular wrench (for large lock ring)
426	0003-4002-000	1	Annular wrench (for small lock ring)
427	1167-9930-000	1	Jack (for bowl top)
428	1165-9960-000	1	Jack (for sliding piston)
428a	1165-9805-000	1	* Pressure piece
429	0003-0135-000	1	Wrench (for feed tube)
430	1165-9820-000	1	Disc stack compressing device
431	2301-9970-000	1	Lifting device (for annular wrench with lock ring)
432	0003-0217-030	1	Chisel
434	1165-9970-010	1	Lifting device
435	1165-9840-010	1	Lifting device (for hood)
436	3050-9930-000	1	Jack (for bowl bottom)
437	1165-9855-000	1	Wrench (for valve in bowl bottom)
438	1165-9895-010	1	Socket wrench (for valve in bowl bottom)
-	0015-0014-080	5	2 1/2-litre-can of lubricating oil M91 Viscosity at 50°C: approx. 125 cSt = 16,5E (SAE 90)
-	0015-0050-090	2	5-litre-can of Shell oil Turbo 27 Viscosity at 50°C: 21 cSt = 3E (for fluid clutch)
-	0015-0113-000	2	100-gram tube of special type grease (for threads of bowl)
-	0015-0106-060	1	0,5-kg can of ball and roller bearing grease

* This part is included in jack 428, but it is also available as separate item.

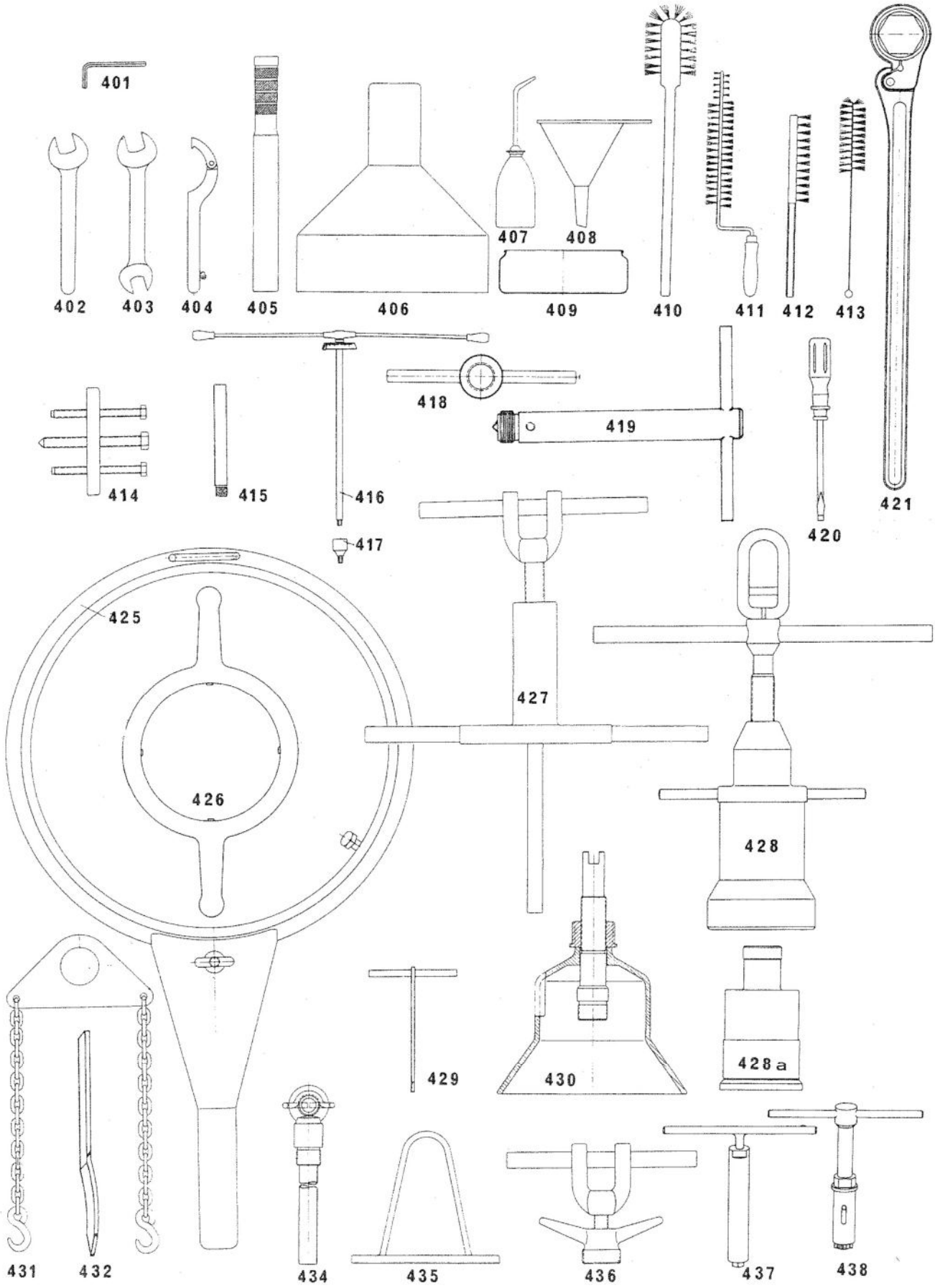

1167-4009-000

Fig. 20

Sterilizing Tank

No. in Fig.	Part - No.	Qty.	Part Description
-	1165-9200-040	1	Sterilizing tank assembly (1-31)
1	0013-2845-300	1	Grooved coupling nut F 50 DIN 11851
2	0018-3955-300	1	Cone connection D 50 DIN 11851
3	0007-2211-750	1	Gasket G 50 DIN 11851
4	0013-2842-300	2	Grooved coupling nut F 25 DIN 11851
5	0018-4269-400	1	Cone connection R 1/2"
6	0007-2208-750	2	Gasket G 25 DIN 11851
7	0001-0675-400	1	Angle thermometer
8	1165-9462-000	1	Bush
9	1165-9210-030	1	Sterilizing tank
10	0026-1102-400	6	Cylindrical pin
11	0019-1363-300	6	Hinge screw
12	0021-3128-300	6	Handle screw
13	0007-2121-750	1	Gasket 118/130x7
14	0007-2483-750	1	Gasket 65/10
15	0006-4081-400	1	Cylindrical pressure spring
16	1165-9698-010	1	Funnel
17	1165-9277-000	1	Cap
18	0019-6966-400	3	Hex head screw M 12x20 DIN 933
19	0026-2108-400	1	Cap
20	0019-2507-300	1	Lens head screw AM 6x10 DIN 85
21	0026-1382-400	1	Washer 6,4 DIN 125
22	1165-9208-020	1	Cover
23	0007-2309-750	1	Gasket 92/112x10
24	0004-2364-758	1	Packing cord 8x8x2200
25	0001-0261-300	1	Blind cap
26	1165-9205-000	1	Flush pipe
27	0018-3949-300	1	Cone connection D 40 DIN 11851
28	0007-2210-750	1	Gasket G 40 DIN 11851
29	0013-2844-300	1	Grooved coupling nut F 40 DIN 11851
30	0007-2209-750	1	Gasket G 32 DIN 11851
31	0021-3155-700	3	Foot

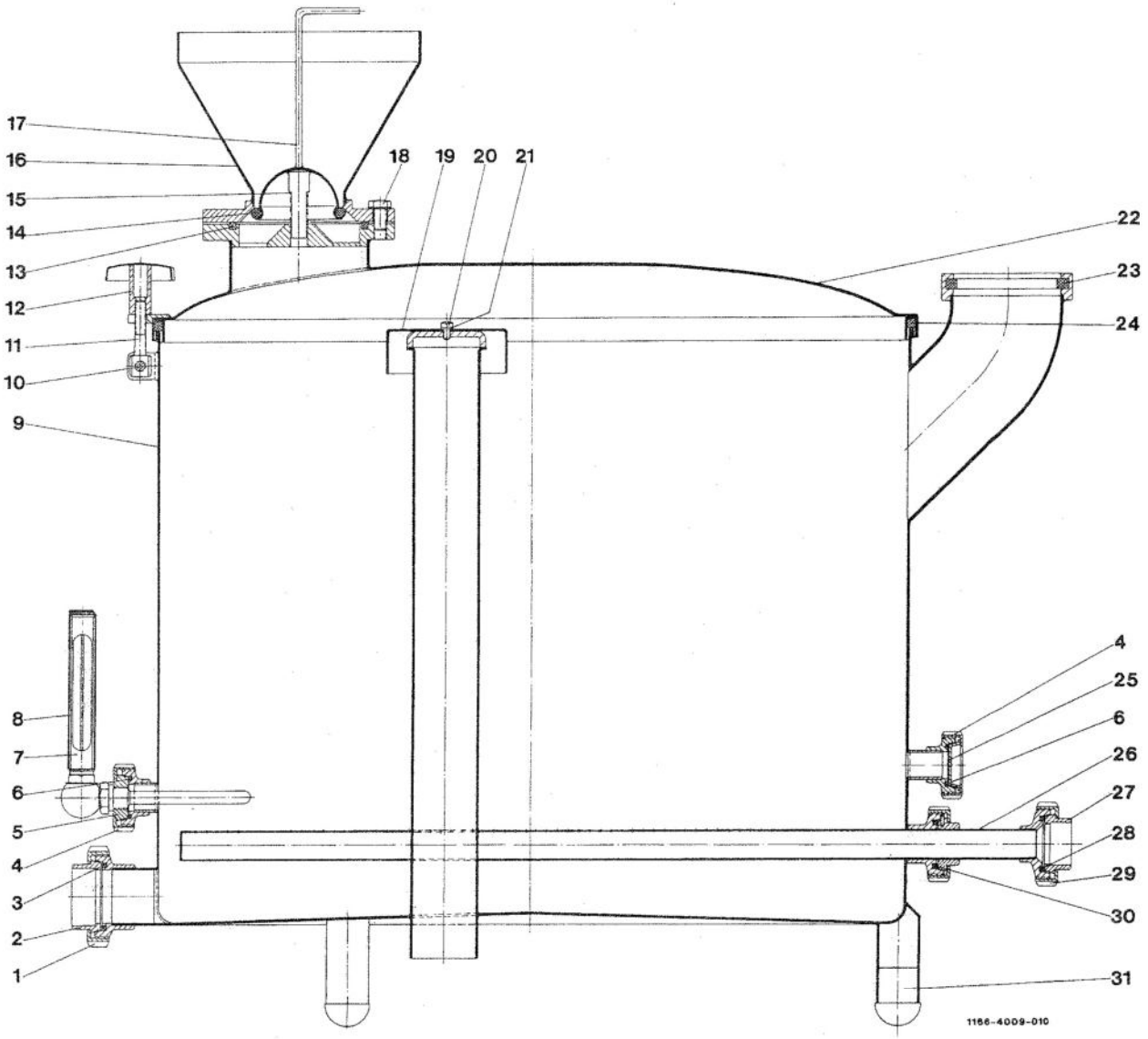
17
16
15
14
13
12
11
10
9
8
7
6
5
4
3
2
1
18
19
20
21
22
23
24
4
25
6
26
27
28
29
30
31
1166-4009-010

Fig. 21

Flow Constrictor

On special order only.

Maximum throughput rate: 15 000 litres/h

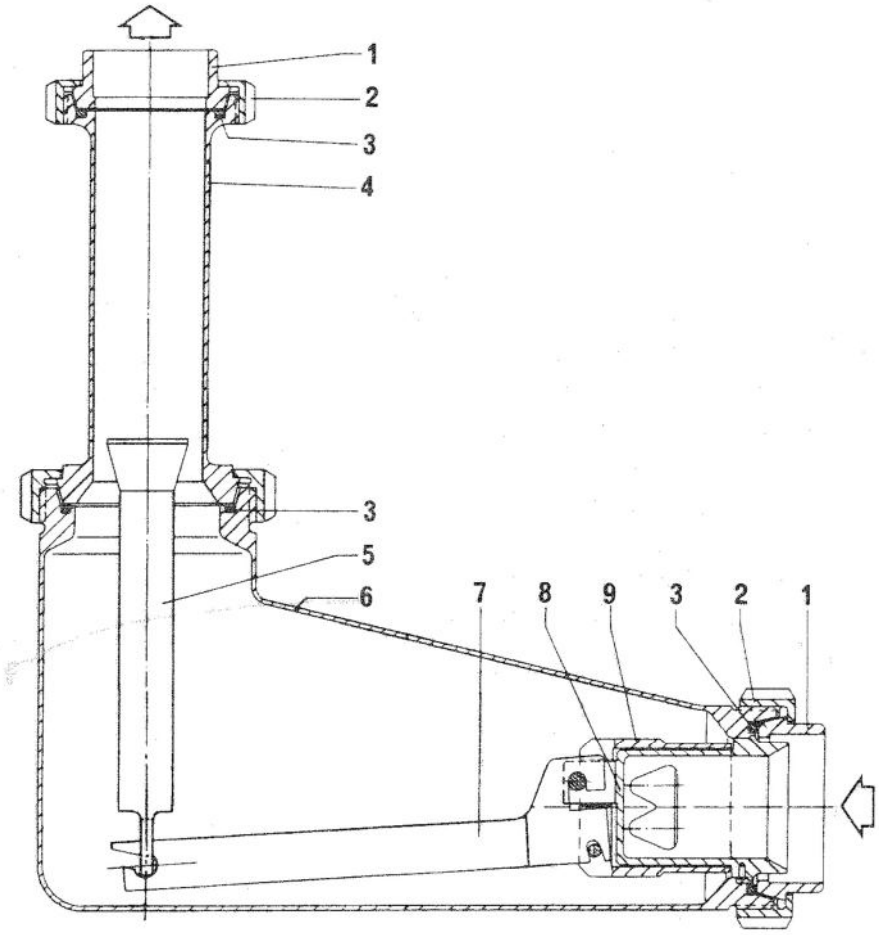

Fig. 22

IMPORTANT! Be sure to install the flow constrictor in such a manner that the inlet is fitted to a horizontal piece of pipe and the control tube 4 is directed vertically upwards.

Fig. 22

No. in Fig.	Part - No.	Qty.		Part Description
-	8251-2150-070	1		Flow constrictor, complete (1-9)
1	0018-4636-400	2		Cone connection 65/50
2	0013-2846-300	2		Grooved coupling nut
3	0007-2212-750	3		Gasket G 65 DIN 11851
4	-	1	*	Pipe
5	-	1	*	Float
6	-	1	*	Housing
7	-	1	*	Throttling lever
8	-	1	*	Throttling housing
9	-	1	*	Regulating piece

* This part can only be replaced by a WESTFALIA factory engineer or by a special repair shop authorized by WESTFALIA, because of special re-fitting to machine. Therefore, when ordering this part, the flow constrictor must be returned to the factory.

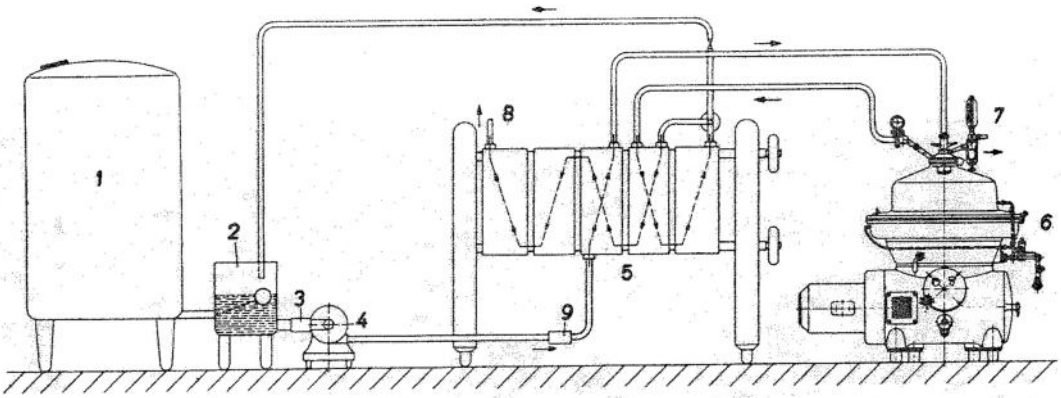

Fig. 1 Flow Constrictor between Pump and first Exchanger

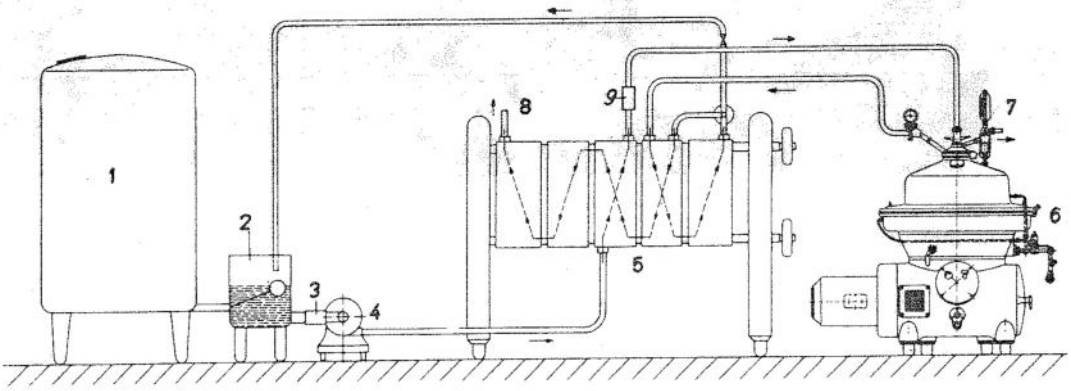

Fig. 2 Flow Constrictor between first Exchanger and Separator

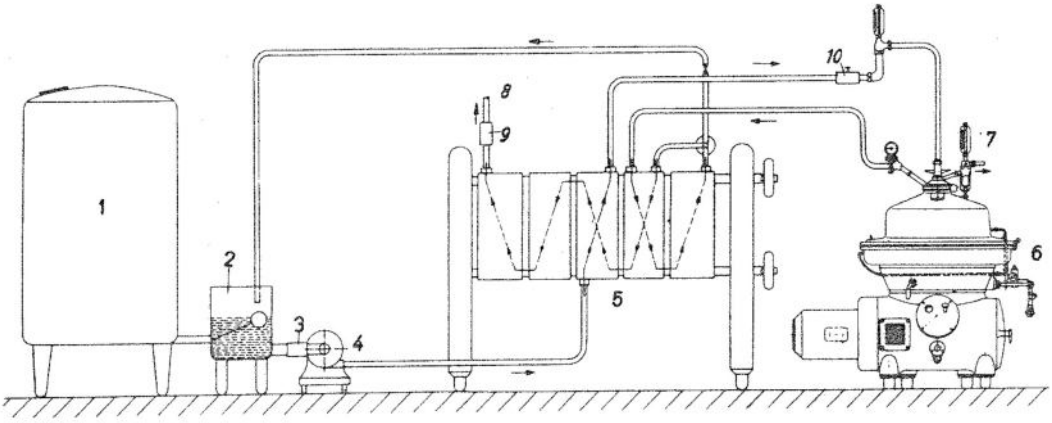

Fig. 3 Flow Constrictor behind the Cooler

Adjustable Flow constrictor and Flowmeter ahead of the Separator

1 Storage tank
2 Balance tank
3 Strainer
4 Milk pump
5 Heater and cooler
6 Separator
7 Cream discharge
8 to Storage tank
9 Flow constrictor
10 Adjustable flow constrictor

Note! When installing the flow constrictor make sure its cylindrical part is in upright position so that the milk flows through it from below.

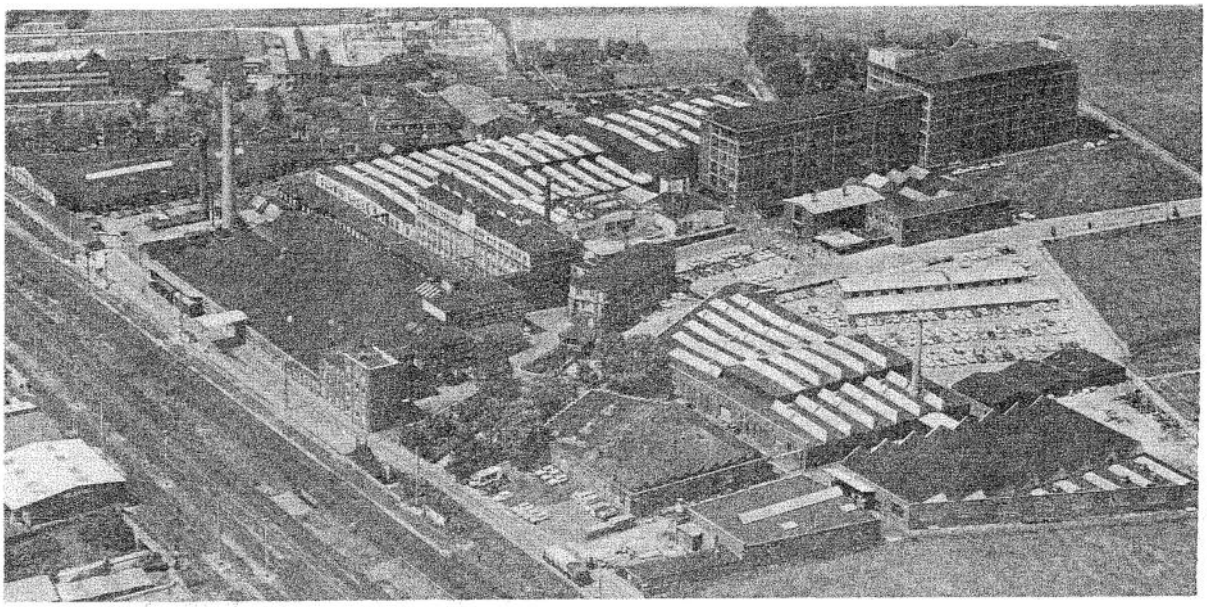

Westfalia Separator AG., Oelde/Germany