OM

Operation Manual

Tetra Pak® Homogenizer 400

5871116178

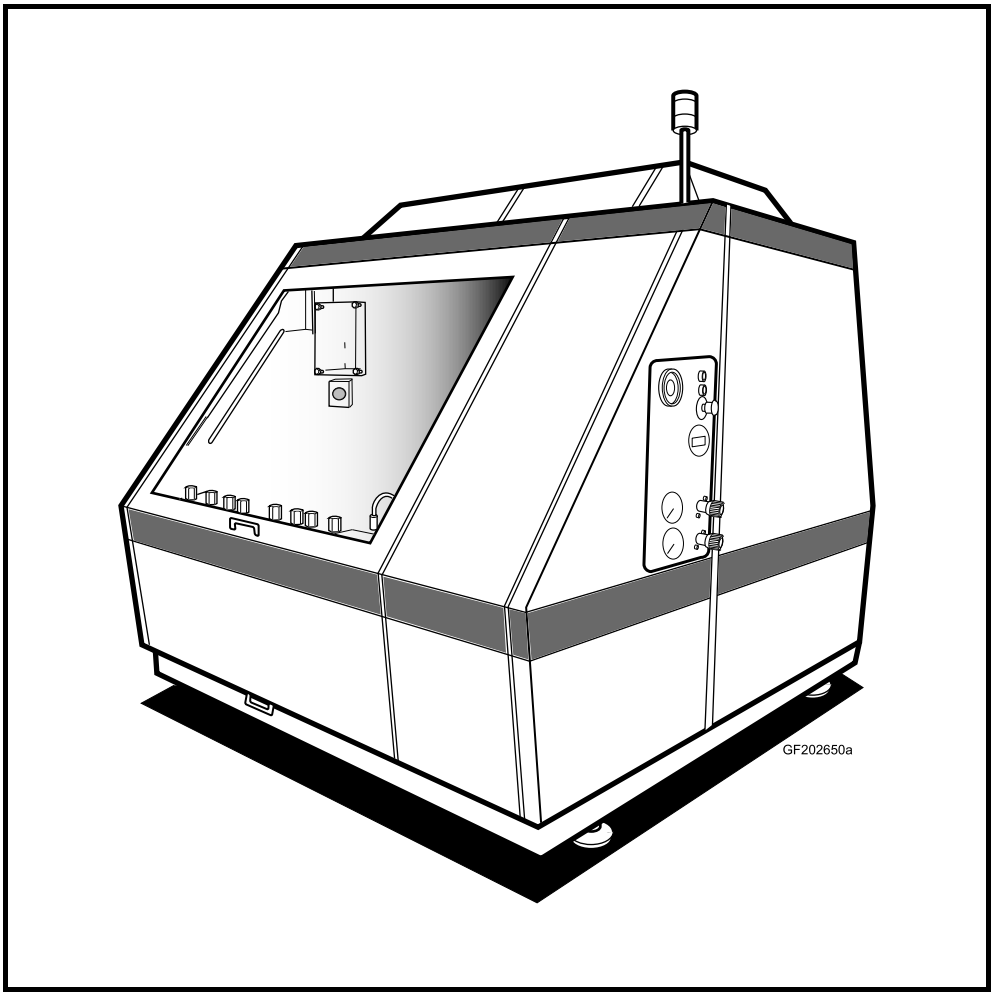

WARNING

Read and follow all safety precaution instructions throughout this document and on safety signs attached to this equipment.

Failure to follow all safety precaution instructions could result in death or serious injury.

Tetra Pak®

Doc. No. OM-3477602-0101

Copyright © 2016 Tetra Pak International S.A.

All rights reserved. No part of this document may be reproduced or copied in any form or by any means without written permission from Tetra Pak Processing Components AB.

, Tetra Pak, and all other trademarks displayed in this document are the property of the Tetra Pak International SA. Tetra Pak Processing Components AB together with Tetra Pak International SA form part of ‘the Tetra Pak Group’. The content of this document is in accordance with the design and construction of the machine or equipment at the time of publishing. The Tetra Pak Group reserves the right to introduce design modifications without prior notice.

The English language version of this document contains the original instructions. All other language versions are translations of the original instructions.

This document was produced and printed by:

Tetra Pak Processing Components AB
Ruben Rausings gata
S-221 86 Lund
Sweden

Doc. No. OM-3477602-0101

Issue 2016-10

This document is valid for:

5871116178

Serial No. / Machine No.
Year of Manufacture Sign.

i Introduction
ii Safety Precautions
1 General Description
2 Operation
3 Cleaning
4 Lubrication

OM
Operation Manual

Tetra Pak® Homogenizer
400
5871116178

Machine or equipment configurations that this document is valid for are described on the next page.

Doc. No. OM-3477602-0101
Issue 2016-10

Tetra Pak®
Tetra Pak Processing Components AB

Valid for:

Name	Drawing Specification and Development Step	Additional Information

Update Log for Doc. No. OM-3477602-0101

This table shows all changes made to this document, including installed rebuilding kits, added or removed pages. Page numbering on added pages begins with UP.

Date	Installed Kit	Added Pages (Doc. No.)	Removed Pages	Signature

Date	Installed Kit	Added Pages (Doc. No.)	Removed Pages	Signature

i Introduction

Description

This chapter contains basic information about this manual and the related Tetra Pak® equipment.

Description i-2

Abbreviations and Terminology i-5

Manual Information i-6

Delivered Manuals i-6

EM i-6

OM i-6

TeM i-6

Page Layout i-7

Page Numbering i-8

Typographical Conventions i-8

Symbols i-9

Machine Introduction i-10

Intended Use of the Equipment i-10

Manufacturer i-10

Identification i-11

CE Classification i-11

3-A Compliance i-11

EAC Compliance i-11

Machine Plate i-12

How to Use This OM i-13

Purpose of the OM i-13

Support and Feedback i-14

This page intentionally left blank

Abbreviations and Terminology

Abbreviation/Terminology	Meaning	Translation
CE	Conformité Européenne/European Conformity	Conformité Européenne/European Conformity
CSA	Canadian Standards Association	Canadian Standards Association
EAC	Eurasian Conformity	Eurasian Conformity
EM	Electrical Manual	Electrical Manual
IM	Installation Manual	Installation Manual
ISO	International Standards Organization	International Standards Organization
OM	Operation Manual	Operation Manual
SDS	Safety Data Sheet	Safety Data Sheet
SPC	Spare Parts Catalogue	Spare Parts Catalogue
TeM	Technical Manual	Technical Manual
TPMS	Tetra Pak Maintenance System	Tetra Pak Maintenance System

Manual Information

The Tetra Pak Group recommends reading all delivered manuals carefully. Make sure that the delivered manuals are available to personnel who operate or maintain the equipment.

It is important to keep this manual for the lifetime of the equipment and to pass the manual on to any subsequent holder or user.

Any item that is named specifically in this manual is to be considered a designated item for the equipment. Designated items are verified by the Tetra Pak Group for use with the equipment.

The Tetra Pak Group will not be held responsible for any damage, loss, injury, or death caused by not following the instructions in the manuals that accompany this equipment, or by a failure to use designated items specified in the manuals that accompany this equipment.

Delivered Manuals

Manuals delivered with this equipment:

EM

The Electrical Manual provides technicians with information about the equipment's electrical system.

OM

The Operation Manual provides the operator with information on handling and operating the equipment before, during, and after production.

TeM

The Technical Manual provides technicians with information which can be:

- information required to safely install the equipment
- information required to maintaining the equipment
- information about the machine's/equipment's electrical system
- information necessary to order spare parts from the Tetra Pak Group
- other technical information

Page Layout

Every main page in a manual contains a header and a footer. The page header contains the chapter name (1) and the section name (2). The page footer contains the page number (3), and the document number (4). See also the Page Numbering section.

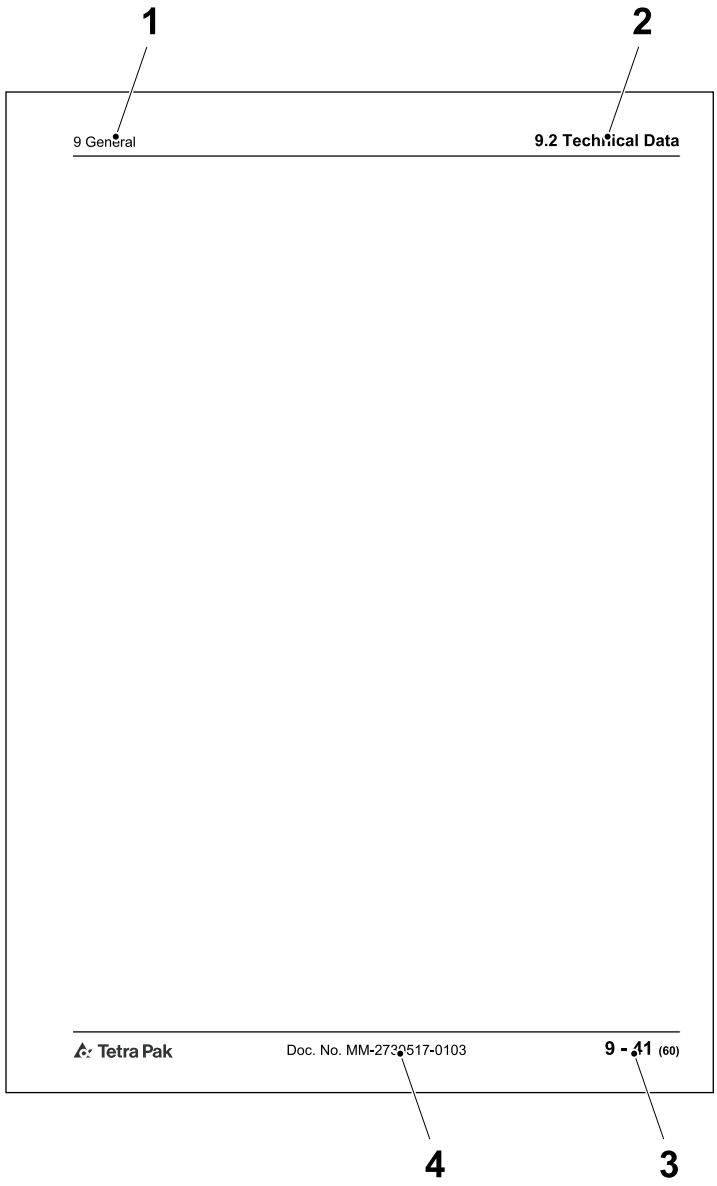

1 Chapter name
2 Section name
3 Page number
4 Document number

Page Numbering

A page number has three parts:

- chapter number (1)
- consecutive page number (2) within the chapter
- total number of pages (3) in the chapter

Note! The letters UP may replace the chapter number (1) if the manual includes update pages. The consecutive page number (2) and the total number of pages (3) of update pages do not follow the existing sequential page numbering of the chapter.

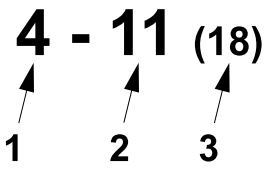

1 Chapter number
2 Consecutive page number
3 Total number of pages

Typographical Conventions

Physical buttons on the operator panel, emergency stop devices, program steps, and program tasks are printed in CAPITAL LETTERS.

Names of buttons, entry fields, menu items, or other objects that allow the user to control the user interface are printed in `Courier`.

Information that is displayed on the user interface, is to be repeated in the user manual, but is not used to control the user interface, is printed in `COURIER CAPITAL LETTERS`.

Cross-references are underlined.

In position lists, the numbers in square brackets following the items in the lists refer to the position numbers in the Spare Part List.

Symbols

Symbols used in illustrations.

	A pointer arrow indicates the position of an object.
	A zoom arrow indicates that an object view is enlarged. The arrow points towards the enlarged view of the object.
	A rotation movement arrow indicates rotational movement of an object. The arrow points in the direction of rotation.
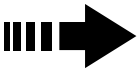	A straight movement arrow indicates movement of an object. The arrow points in the direction of movement.

Machine Introduction

Intended Use of the Equipment

This Tetra Pak equipment is intended for use according to the specifications in **Technical Data** (see **Technical Manual**) and related documents.

All other use is prohibited. Tetra Pak will not be held responsible for injury or damage if the equipment is used for any other purpose than the intended use described above.

Manufacturer

This Tetra Pak® equipment is manufactured by

Tetra Pak Processing Components AB
Ruben Rausings gata
S-221 86 Lund
Sweden

Identification

CE Classification

This equipment complies with the basic health and safety regulations of the European Economic Area (EEA).

3-A Compliance

The equipment complies with the 3-A Sanitary Standards for Homogenizers and Reciprocating Pumps if marked with the 3-A sign.

EAC Compliance

The equipment complies with the regulations of the Eurasian Customs Union.

Machine Plate

The machine plate carries data needed when contacting Tetra Pak concerning this specific equipment.

Make sure that the equipment data in the front pages of this manual corresponds to the machine plate data and the machine specification.

The first illustration shows an example of a machine plate for the Eurasian Customs Union.

The second illustration shows an example of a machine plate for other markets.

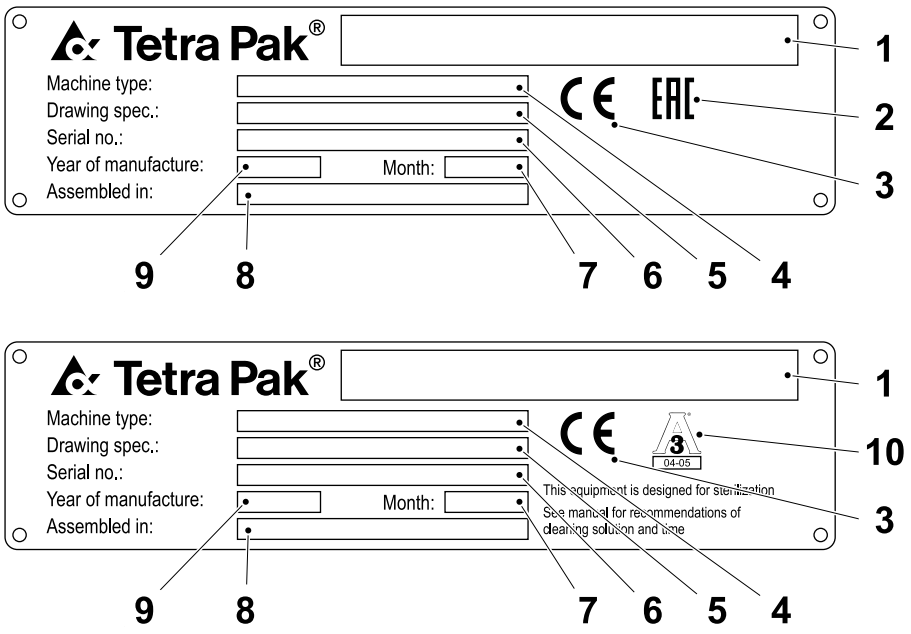

1 Manufacturer/address
2 EAC mark
3 CE mark
4 Machine type
5 Design pressure
6 Machine serial number
7 Month of assembly
8 Assembly place
9 Year of manufacture
10 3A mark

How to Use This OM

Purpose of the OM

The Operation Manual provides operators with information on handling and operating the equipment before, during, and after production.

Support and Feedback

For assistance when operating this equipment, or other inquiries, comments, or suggestions, pose the questions or give feedback by contacting the nearest Tetra Pak® representative. If access to the Tetra Pak intranet is available, contact Liaison via Query by typing QuTI-P in the address field of your browser. If access to QuTI-P is not available, request access by contacting the Global Service Desk.

ii Safety Precautions

Description

Safety Precaution Instructions

WARNING

Read and understand this manual before using the machine.
Failure to follow safety precautions and instructions can result in death or serious injury.

Description ii-2

Safety Messages Description ii-5

Personnel Requirements ii-6

Skilled Person ii-6

Instructed Person ii-6

Safety Signs ii-7

Locations of Safety Signs ii-7

Protective Devices ii-8

Emergency Stop ii-8

Emergency Stop Buttons ii-8

Safeguards ii-9

Safe Manual Handling ii-11

Personal Protection ii-12

Noise ii-12

Entanglement ii-12

Hazardous Substances ii-13

Disposal of Chemical Substances ii-13

Cleaning Solutions ii-13

Emergency Procedures ii-13

Eyes ii-13

Skin ii-14

Inhalation ii-14

Ingestion ii-14

Personal Protective Equipment ii-14

Supply Systems ii-15

Definition of Lockout Procedure ii-15

Electrical Supply ii-15

Residual Voltage ii-15

Electrical Cabinet **ii-15**

Air Supply **ii-16**

Steam Supply **ii-16**

Water Supply **ii-16**

Safety Messages Description

A safety message is always accompanied by a safety alert symbol and a signal word.

The safety alert symbol is used to alert about potential personal injury hazards. To avoid hazards, obey all safety messages that follow this symbol.

The following safety alert symbols and signal words are used in this manual to inform the user of hazards.

DANGER	Danger indicates an imminently hazardous situation which, if not avoided, **will** result in **death or serious injury**.
WARNING	Warning indicates a potentially hazardous situation which, if not avoided, **could** result in **death or serious injury**.
CAUTION	Caution indicates a potentially hazardous situation which, if not avoided, **may** result in **minor or moderate injury.** It may also be used to alert against unsafe practices.
CAUTION	Caution without the safety alert symbol indicates a potentially hazardous situation which, if not avoided, **may** result in **property damage**.

Personnel Requirements

Note! Personnel includes all persons working on or near this equipment.

Only skilled or instructed persons are allowed to work with this equipment.

Skilled Person

A skilled person must have relevant education and experience to enable him or her to identify hazards, analyse risks, and avoid hazards which electricity, machinery, chemicals, other energies, and supply systems on this equipment can create.

Skilled persons must meet local regulations, such as certifications and qualifications for working with these energies and systems.

Instructed Person

An instructed person must be adequately advised or supervised by a skilled person. The skilled person enables the instructed person to identify hazards, analyse risks, and avoid hazards which electricity, machinery, chemicals, other energies, and supply systems on this equipment can create.

Safety Signs

WARNING

Damaged or missing safety signs.
Safety signs are used to indicate safety hazards. If the signs are missing or damaged, they can not fulfil this function. Replace all missing or damaged safety signs immediately.

Safety signs are attached to the equipment. The table below lists all the signs that are used, and illustrations show their locations on the equipment. Each position number refers to two standards of a safety sign in the table, but only one is used on the equipment.

- Make sure that each safety sign is legible and in its correct position after installation and maintenance.
- Replace all missing or damaged safety signs immediately.

Pos	ISO Standard	ANSI Standard
1		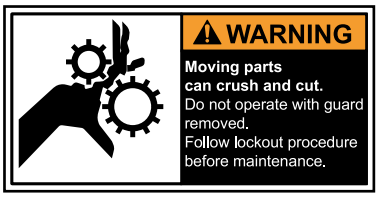
	Moving parts can crush and cut. Do not operate with guard removed. Follow lockout procedure before maintenance.	

Locations of Safety Signs

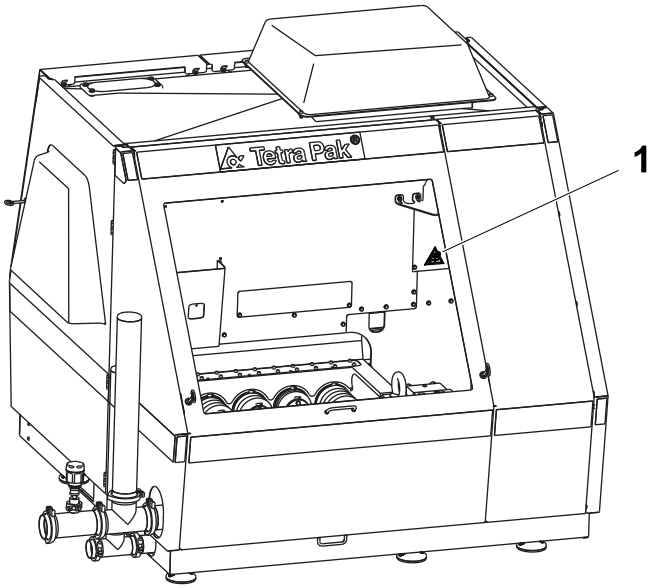

Protective Devices

There are different kinds of protective device designed to ensure safe use of the equipment. See the sections below.

WARNING

Hazardous zones.

Hazardous zones are safeguarded and provided with protective devices. Do not inch or run this equipment if any protective device is inoperative.

Change inoperative components of the safety system immediately.

Emergency Stop

DANGER

Hazardous voltage.

Will shock, burn, or cause death.

Hazardous voltage remains ON after activating an EMERGENCY STOP.

Emergency stop devices are used to stop this equipment immediately in a hazardous situation. Learn the positions of all emergency stop devices and how to use them.

Emergency Stop Buttons

Push one of the EMERGENCY STOP buttons to stop this equipment immediately.

The location of each EMERGENCY STOP button is shown by an arrow.

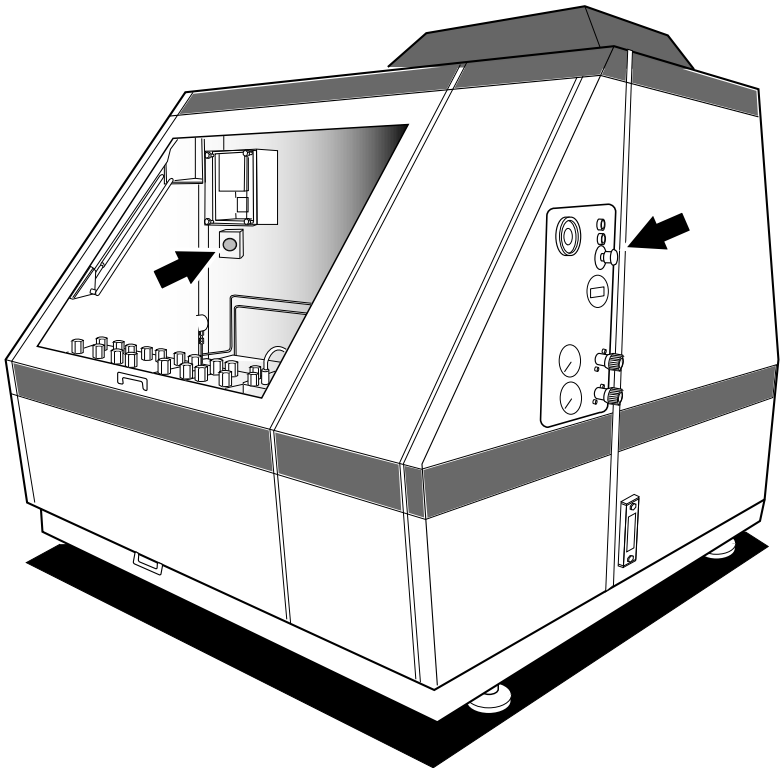

Safeguards

WARNING
Moving machinery parts.
Never defeat or bypass the interlocking devices.

Movable guards, for example, doors and covers leading to hazardous zones, are fitted with interlocking devices where required. These devices are usually electric safety switches that are parts of the safety system and must never be defeated, bypassed, or otherwise made inoperative.

Where movable guards (doors) are equipped with means to be locked in a non closed position, any person with the intention to preside, for any reason, behind such a guard must lock the guard in the non closed position by use of a padlock.

Note! For work on the electrical equipment, the electrical power must also be disconnected.

CAUTION
Corners and edges.
Close the doors, guards, or parts of the equipment unless they must be open during work.

CAUTION
Burn hazard.
Parts of the equipment protected by guards may be hot after operation. Allow components to cool down or use personal protective equipment.

After installation and maintenance, and before this equipment is inched or run, check that all safeguards are in place and that they operate correctly.

CAUTION
Equipment damage.
The equipment can be damaged if it is not stopped in the correct way. Never stop this equipment by opening a movable guard, for example, a door or cover, equipped with an interlocking device.

(Cont'd)

(Cont'd)

The location of each interlocking device is shown by an arrow.

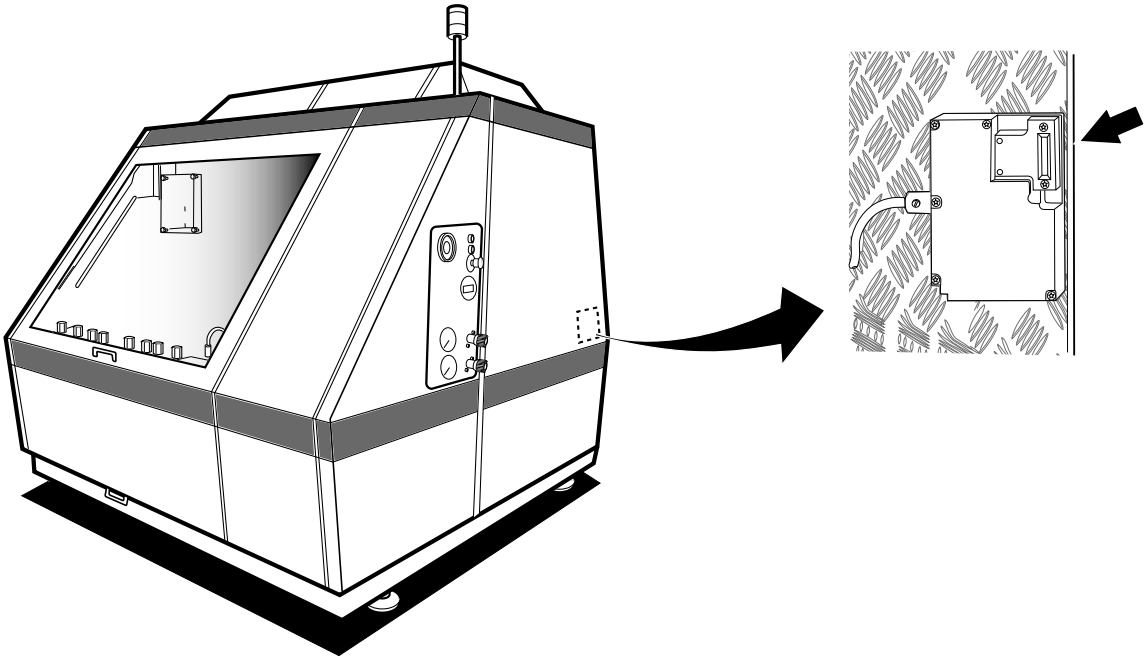

Safe Manual Handling

Use mechanical lifting aids whenever possible. If mechanical lifting aids are not available, do not attempt to lift loads over 23 kg without the assistance of a colleague. Avoid lifting below knee height and above shoulder height. If it is necessary to lift from the floor, follow the instructions below to reduce the risk of back and disc injuries.

- Use safety shoes and be sure that the surface of the floor is not slippery.
- Get close to the load.
- Take a wide stance and find the best positions for your feet.
- Bend your hips and knees, and use your leg muscles.
- Keep the load close to your body.
- Do not twist your body while moving the load.
- Take small steps when turning.

In order to reduce the risk of injury to discs and back muscles, be careful to not bend or twist your back when lifting. Keep the load close to your body to reduce the strain on your back.

To reduce the ergonomic risks to each individual operator, job rotation is recommended, so that recovery and variety are provided.

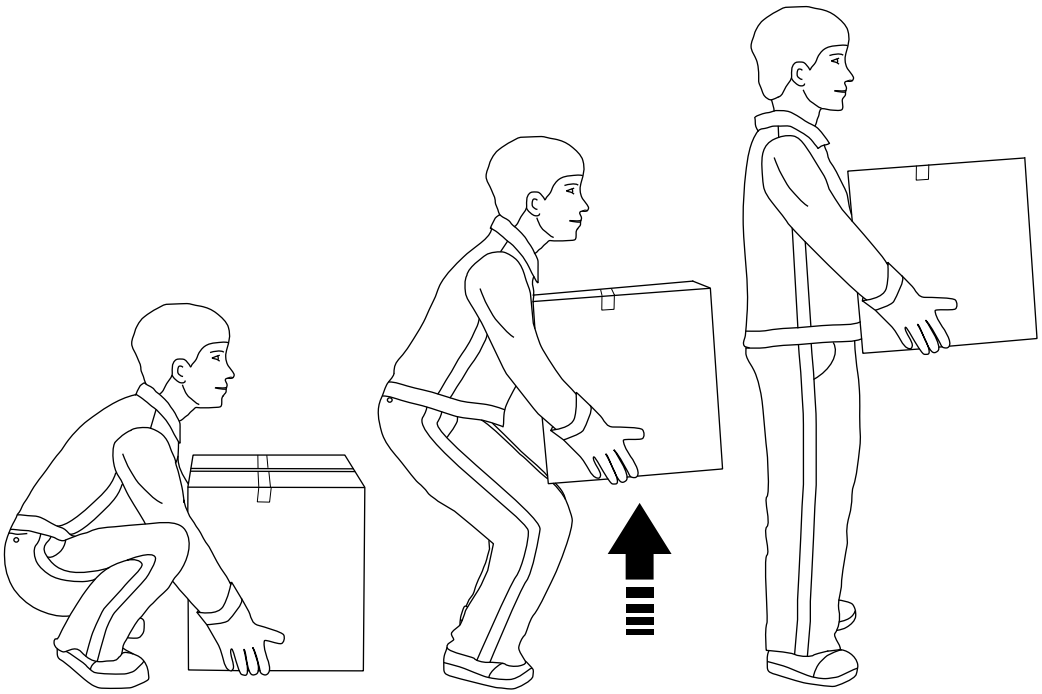

Personal Protection

This section applies to all personnel at all times when this equipment is in operation. For special personal protective equipment required when handling hazardous substances, see the Hazardous Substances section.

Noise

WARNING

Hazardous noise.
Can cause impaired hearing.
Wear hearing protection whenever this equipment is in operation.

Entanglement

WARNING

Risk of entanglement.
Do not wear jewellery or loose clothing when working on or near this equipment.
Restrain long hair with, for example, clips or rubber bands.

Hazardous Substances

WARNING

Contact with chemicals can cause death, serious injury, or illness.
Always read and follow the instructions in the safety data sheet supplied by the manufacturer or local supplier, when handling chemicals.

Make sure that

- the safety data sheet is available
- preparations have been done to ensure that the stated safety measures in the safety data sheet can be followed
- the locations of the first aid equipment are learned in order to act immediately in case of an accident

Disposal of Chemical Substances

Always read and follow the disposal instructions in the safety data sheet supplied by the manufacturer or local supplier.

It is strongly recommended that used chemical containers are

- disposed of according to the instructions immediately after use
- not used as disposal containers for other chemicals in order to avoid uncontrolled chemical reactions within the container

Cleaning Solutions

WARNING

Corrosive chemical.
Wear personal protective equipment.

Cleaning solutions normally contain caustic soda (NaOH) or nitric acid (HNO_3). These chemicals may cause burning to skin and eyes. Follow the instructions given by the supplier.

Emergency Procedures

If there is an accident, rinse the affected area as soon as possible with large amounts of water.

Eyes

If splashes of cleaning solution come in contact with the eyes

- wash the eyes thoroughly with lukewarm water for 15 minutes (keep eyelids wide apart)
- call for medical attention immediately

Skin

If cleaning solution comes into contact with skin or clothes

- rinse immediately with plenty of water
- call for medical attention immediately if skin burns appear
- thoroughly wash the clothes before wearing them again

Inhalation

If irritation or pain is experienced due to having **inhaled** vaporized cleaning solution

- leave the affected area and get some fresh air
- call for medical attention if the symptoms get worse

Ingestion

If cleaning solution is swallowed

- do not attempt to cause vomiting
- drink large amounts of lukewarm water to dilute the cleaning solution
- call for medical attention immediately

Personal Protective Equipment

The personal protective equipment recommended to wear during normal operation and maintenance is:

- hearing protection
- protective shoes or boots made of PVC, PE plastic, or rubber
- protective clothes

During handling of chemicals, manual cleaning of equipment and maintenance of machinery that have used chemicals add following extra protection:

- protective goggles (for instance, TP No. 90303-11), tight fitting
  If there is a risk of splashes, a visor is a suitable complement
- protective gloves made of neoprene (for instance, TP No. 90303-12), nitrile, or butyl rubber
- protective apron (for instance, TP No. 90303-13), or protective suit when handling larger amounts of chemicals
- proper respiratory equipment, if ventilation is insufficient

Supply Systems

Definition of Lockout Procedure

A lockout procedure is a procedure to put each necessary energy isolating device in its safe position to prevent the energisation of the equipment, such as when a maintenance procedure should be carried out.

A lockout is the use of a device, for example, a padlock, to make sure that an energy isolating device cannot be operated.

An energy isolating device is a mechanical device that physically prevents transmission or release of energy, such as an electrical supply disconnecting device.

A detailed instruction for the specific lockout procedure(s) for this equipment is found in the Maintenance Manual.

Electrical Supply

DANGER

Hazardous voltage and moving machinery.
The electrical supply disconnecting device must be turned off and secured with a lock before any work with the equipment that requires the electrical supply to be disconnected.

Note! The key to the lock must be removed by the technician and retained in his/her possession until all work is completed. (The lock is not a part of the delivery.)

Certain maintenance procedures may require power supply systems to be on. These exceptions are clearly stated in the manual.

Residual Voltage

DANGER

Hazardous voltage.
Will shock, burn, or cause death.
After the electrical supply disconnector is turned off, residual voltage remains in the capacitor circuits. Wait five minutes before opening the enclosure containing these circuits. Ensure that no residual voltage remains on the capacitors before touching them.

Electrical Cabinet

DANGER

Hazardous voltage.
Will shock, burn, or cause death.
Parts behind doors to electrical enclosures may be live. The electrical supply disconnector must be turned off and secured with a lock before performing maintenance inside the electrical cabinet.

Note! The key to the lock must be removed by the technician and retained in his/her possession until all work is completed.

The use of a key or a tool is necessary to access to the electrical cabinet.

(Cont'd)

(Cont'd)

Make sure that the electrical cabinet doors are closed after working inside the electrical cabinet. Doors with locks must be locked.

Air Supply

WARNING

Compressed air and moving machinery.
Close the main air valve and lock it, and safely release compressed air from the air system before any work with the equipment that requires the air supply to be closed.

Note! The key to the lock must be removed by the technician and retained in his/her possession until all work is completed. (The lock is not a part of the delivery.)

Certain procedures may require air supply systems to be on. These exceptions are clearly stated in the manuals.

Steam Supply

WARNING

Hot steam can cause scalds.
Pressurised steam can be discharged unexpectedly.
Close the main steam valve and lock it, and safely vent all steam pressure from the steam system before any work on parts with steam, such as pipes and valves, that requires the steam supply to be closed.

Note! The key to the lock must be removed by the technician and retained in his/her possession until all work is completed. (The lock is not a part of the delivery.)

Certain procedures may require steam supply systems to be on. These exceptions are clearly stated in the manuals.

WARNING

Hot parts can cause severe burns.
Pipes, valves, and other parts containing steam can be extremely hot. Do not touch hot parts.

Water Supply

CAUTION

Water under pressure.
Close the main water valves before any work with the equipment that requires the water supply to be closed.

Certain procedures may require water supply systems to be on. These exceptions are clearly stated in the manuals.

1 General Description

1.1 Applications 1-3
1.2 Process Description 1-4
1.3 Denominations 1-5
1.3.1 Main Groups of the Machine 1-5
1.3.2 Control Panel 1-6
1.3.3 Cooling Circuit 1-7

1.1 Applications

High pressure homogenization of liquid food.

DAIRY	OTHER
Pasteurized milk	Beverages
UHT milk	Concentrates
Cream	Fruit juices
Yoghurt	Baby food
Condensed milk	Dressing
	Tomato juice and ketchup

1.2 Process Description

The high pressure homogenizer functions as a positive displacement pump. It forces the product through a narrow adjustable gap under high pressure. The resulting high velocity and turbulence in the gap effectively reduce the size of liquid droplets.

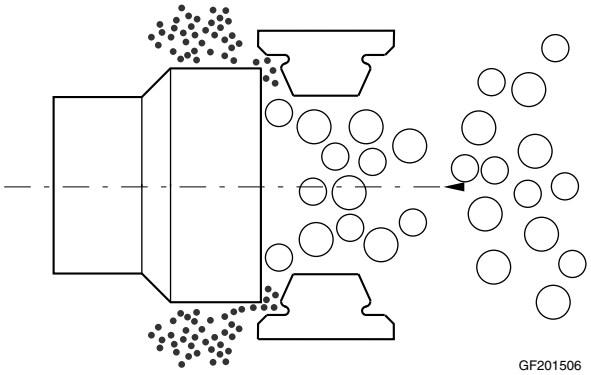

1.3 Denominations

1.3.1 Main Groups of the Machine

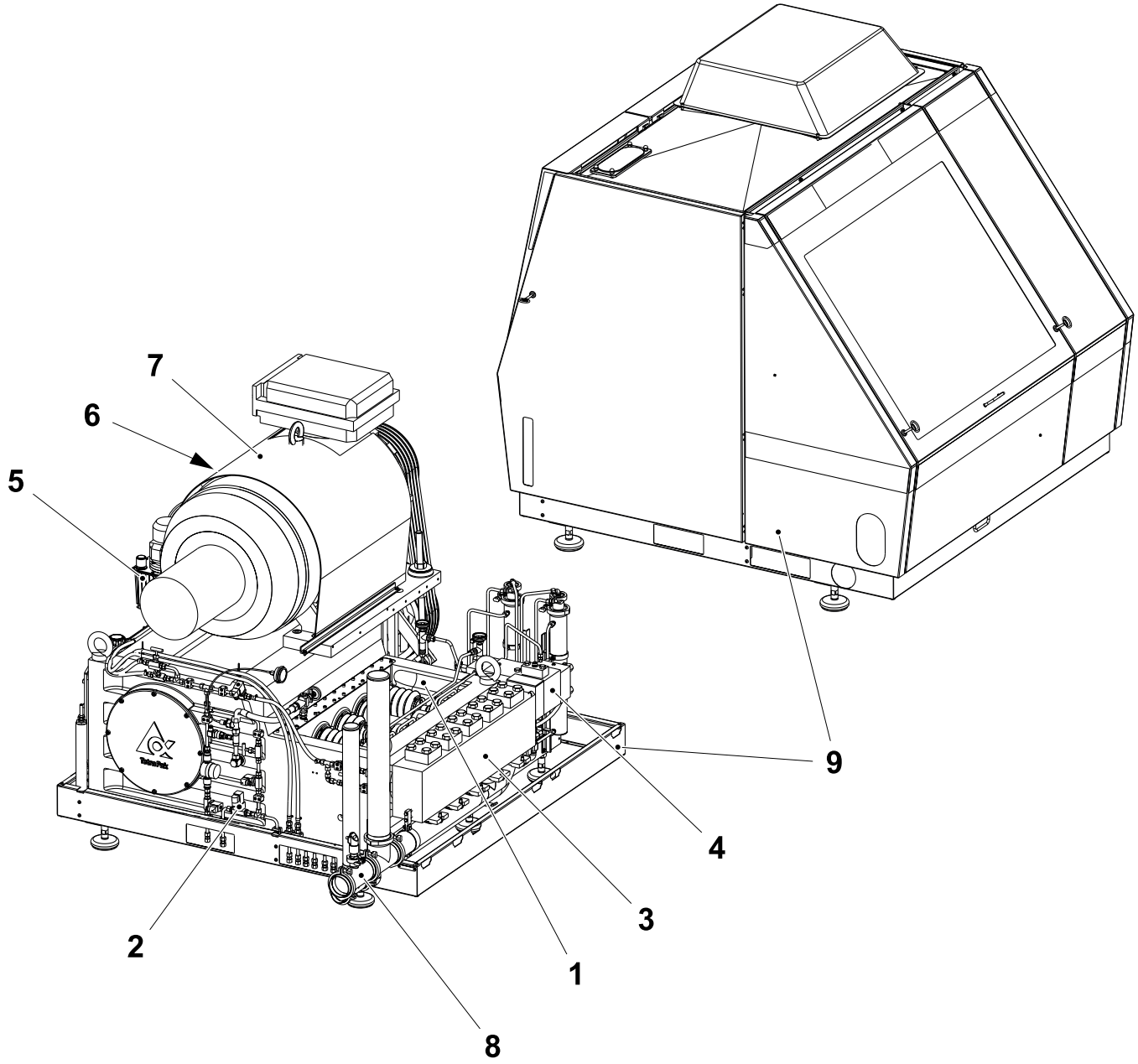

1 Crank case
2 Cooling circuit
3 Wetend
4 Homogenizing head
5 Hydraulic unit
6 Pressure lubricator
7 Drive unit
8 Product connection
9 Frame with body

1.3.2 Control Panel

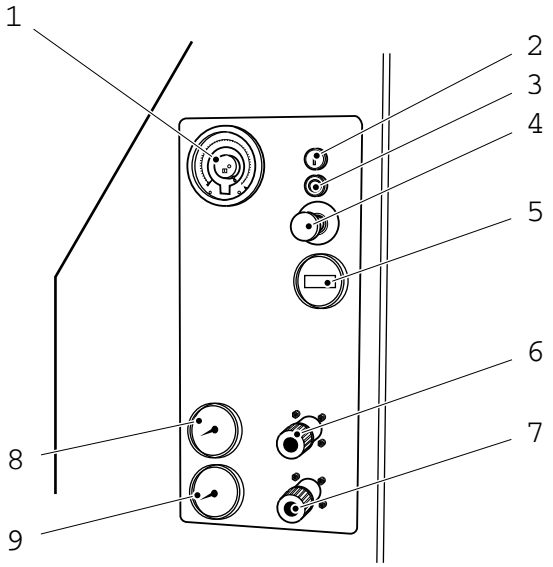

1	Homogenization pressure gauge
2	Start button
3	Stop button
4	Emergency stop button
5	Hour counter
6	Pressure adjusting valve, 1st stage (Remote control as option)
7	Pressure adjusting valve, 2nd stage (Remote control as option)
8	Hydraulic pressure gauge, 1st stage
9	Hydraulic pressure gauge, 2nd stage

1.3.3 Cooling Circuit

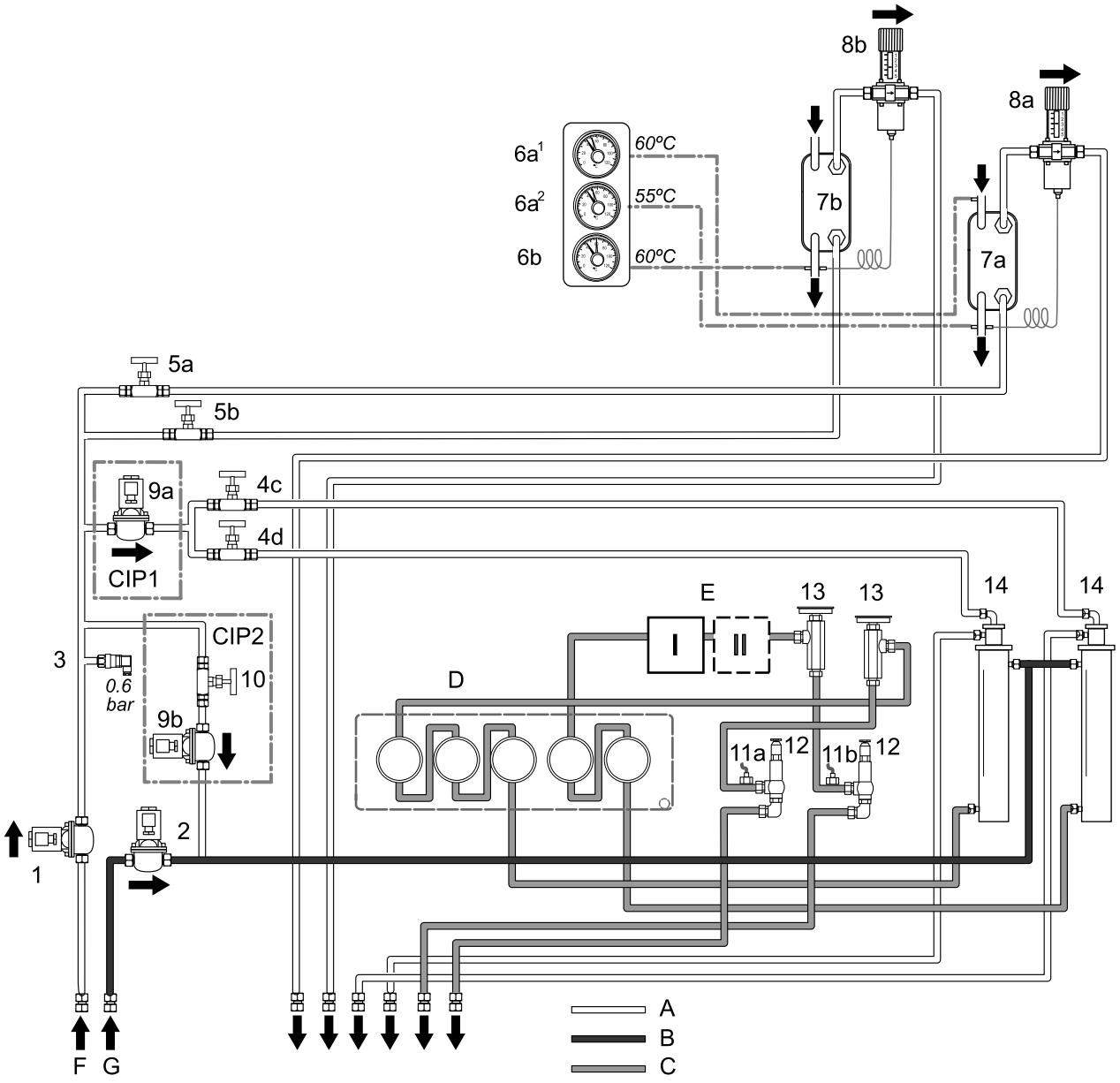

a = Crankcase circuit

b = Gearbox circuit

A	Cooling water
B	Steam
C	Condensate
D	Piston seals
E	Homogenizing head
F	Cooling water
G	Steam

(Cont'd)

(Cont'd)

Pos.	Pos. SPC drw	Description	Function
1	K/Q 810(Y/F 810)	Cooling water shut off valve	Solenoid, controlled by electrical signal (Pneumatic, controlled by compressed air as option)
2	K/Q 811 (Y/F 811)	Steam shut off valve	Solenoid, controlled by electrical signal (Pneumatic, controlled by compressed air as option)
3	BF 846 (B 846)	Flow / Pressure guard (Option)	Cooling water guard (NO). The guard is closed with cooling water on (P > 0.6 bar).
4c 4d	V 832 V 831	Regulating valve	Basic setting: Adjust flow through condenser to approx. 300 l/h (79 U.S. gallon/h) During running: Adjust condenser cooling water outlet temperature to 60 - max. 65°C (140 - 149°F)
5a	V 811	Regulating valve	Regulation of oil temperature (Open if the optional regulator (8) exists) Crankcase oil temperature: 50°C (122°F)
5b	V821	Regulating valve	Regulation of oil temperature (Open if the optional regulator (8) exists) Gearbox oil temperature: 55°C (131°F)
6a[1]	BT 815 (B 815)	Thermometer with alarm set point	Alarm point: 60°C (140°F) 'High machine temperature'
6a[2]	BT 841 (B 841)	Thermometer with alarm set point	Alarm point: 55°C (131°F) 'High oil temperature in crankcase'
6b	BT 842 (B 842)	Thermometer with alarm set point	Alarm point: 60°C (140°F) 'High oil temperature in gearbox'
7		Heat exchanger	Oil cooler, water as cooling media
8a	V 812	Regulator (Option)	Automatic control of oil temperature Crankcase oil temperature: 50°C (122°F)
8b	V 822	Regulator (Option)	Automatic control of oil temperature Gearbox oil temperature: 55°C (131°F)
9a 9b	K/Q 820 (Y/F 820) K/Q 821 (Y/F 821)	Steam shut off valve CIP 1 Steam shut off valve CIP 2	Solenoid, controlled by electrical signal (Pneumatic, controlled by compressed air as option)
10	V 833	Regulating valve	
11a 11b	BT 830 (B 830) BT 831 (B 831)	Temperature transmitter	Measures the condensate temperature
12		Condensate regulating valve	Automatic control of condensate temperature - 110°C (230°F)
13		Thermometer	Indicates condensate temperature
14		Condenser	Produces condensate for aseptic seal

2 Operation

2-1 Preparations 2-3
2-2 Start. 2-4
2-3 Sterilization 2-5
2-4 Before Production 2-6
2-5 Check During Production. 2-7
2-6 Stop. 2-8
2-7 Emergency Stop 2-9

2-1 Preparations

DANGER

Risk of explosion - Immediate danger to life!
Make sure that the outlet pipes not are blocked in any way. Due to high pressure, this will make a risk of exploded pipes and dampers.

WARNING

Risk of scalds
This machine works under pressurised conditions and high temperatures. To avoid jets of hot liquid, steam or cleaning solution, make sure that any operation sequence is finished and the machine is cooled down and without pressure before disassembling and parts.

a) Check that the main power switch is turned off.

b) Check oil levels and top up if required
   - Crankcase
   - Gearbox
   - Hydraulic unit

   Note! Type of oil: see 4 Lubrication on page 4-1.

c) Drain the dampers (1).

d) Close all covers.

e) Open the external valves for cooling water and steam.

f) Turn on the external main power switch.

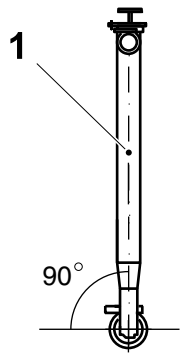

1 Damper

2-2 Start

a) Start the pressure lubricator and adjust the pressure for the crankcase to 6-8 bar (90-120 psi).

b) Start the product feed pump / Start by external signal.

Check that the inlet pressure corresponds to the table below:

Recommended inlet pressures	
Product	**P1 bar (psi)**
Low viscous products, e.g. milk, juice	3-10 (45-150)
High viscous products, e.g. sauces, ketchups	4-10 (60-150)

c) Push the start button / Start by external signal.

- The cooling water valve opens.
- The steam valve opens.

Check for flow at the cooling water- and condensate outlets.

d) Start the hydraulic unit.

2-3 Sterilization

Before production the machine must be sterilized. This is done in line with surrounding process systems.

2-4 Before Production

a) Set the homogenizing pressure

- Adjust the 2nd stage pressure adjusting valve to desired value or 20% of the homogenization pressure.
- Adjust the 1st stage pressure adjusting valve to the decided value.

2-5 Check During Production

WARNING

Risk of jam

Avoid getting in contact with the pistons.

If a fault occurs, see section Trouble shooting in the Technical Manual.

a) Check for alarm indications.

b) The homogenizing pressure.

   Fine tune by help of the 1st stage pressure adjusting valve.

c) Product inlet pressure.

d) Lubrication pressure for the crankcase, 6-8 bar (90-120 psi).

e) Gearbox oil temperature.

f) Crankcase oil temperature at:

   - inlet
   - outlet (= 'Machine temperature')

g) Condensate temperature 110°C (230°F).

2-6 Stop

a) Turn off the pressure adjusting valves for
   - 1st stage
   - 2nd stage

b) Push the stop button / Stop by external signal

c) Stop the pressure lubricator

2-7 Emergency Stop

WARNING

Risk of scalds

Emergency stopped. The machine may contain hot liquid or cleaning solution. Handle with outmost care to avoid exposure.

Push the emergency stop button only if there is a risk of damage to personnel or property.

a) Eliminate the cause for the emergency stop.

b) Turn off the pressure adjusting valves for

- 1st stage
- 2nd stage

c) Release the emergency stop button and perform a normal start according to 2-2 Start on page 2-4 and 2-4 Before Production on page 2-6.

This page intentionally left blank

3 Cleaning

3.1 Cleaning..... 3-3

3.1 Cleaning

WARNING

Risk of scalds

This machine works under pressurised conditions and high temperatures. To avoid jets of hot liquid, steam or cleaning solution, make sure that any operation is finished and the machine is cooled down and without pressure before disassembling any parts.

Check the cleaning of the pulsation damper after cleaning and clean manually if required. The pulsation damper should always be drained after cleaning.

The minimal required cleaning flow is 100% of maximal requested production flow.

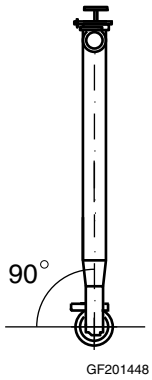

This page intentionally left blank

4 Lubrication

4.1 Recommended Oil 4-3
4.2 Oil Amount 4-7

4.1 Recommended Oil

Crankcase			
Recommended oil: Circulation/gearbox oils with EP additives which do not harm slidebearings (yellow metals)			
Mineral type		**Standard**	
Supplier	**Type**	**Viscosity***	
BP/Castrol	Energol GR-XP	220	
Exxon/Mobil	Mobilgear 600 XP	220	
Shell	Omala S2 B	220	
Klüber	Klüberoil GEM 1	220	
Synthetic Type**		**Standard**	**Heavy Duty******
Supplier	**Type**	**Viscosity***	
BP/Castrol	Alphasyn EP	220	460
Exxon/Mobil	SHC 630-634	220	460
Shell	Morlina S4 B	220	460
Klüber	Klübersynth GEM 4 N	220	460
Food GradeType***		**Standard**	**Heavy Duty******
Supplier	**Type**	**Viscosity***	
BP/Castrol	Optileb GT	220	460
Exxon/Mobil	SHC Cibus	220	460
Fuchs	Fuchs Cassida Fluid GL	220	460
Klüber	Klüberoil 4 UH1	220	460
Tetra Pak	Lubricant H1-0540, PAO v220	220	

* Viscosity in mm^2/sec (cSt) at 40°C (104°F)

** A synthetic oil for the crank case must be of PAO (poly alfa olefine) type, like the Omala, that is mixable with mineral oils and does not affect rubber, sealings and paint.

*** Conform with FDA 21 CFR 178.3570 and classified in NSF H1.

**** Heavy Duty. Start sequence with high load and low r.p.m.

Note! Green oils is for the time being not available, but for some viscosities, and their lubrication performance is not yet good enough for use in our type of heavy duty machines.

(Cont'd)

(Cont'd)

Gearbox		
Recommended oil: Gearbox oil		
Mineral type		
Supplier	**Type**	**Viscosity***
BP/Castrol	Energol GR-XP	320
Exxon/Mobil	Mobilgear 600 XP	320
Shell	Omala S2 B	320
Klüber	Klüberoil GEM 1	320
Synthetic Type**		
Supplier	**Type**	**Viscosity***
BP/Castrol	Enersyn HTX	220-320
Exxon/Mobil	SHC 630-632	220-320
Shell	Morlina S4 B	220-320
Klüber	Klübersynth GEM 4 N	220-320
Food GradeType***		
Supplier	**Type**	**Viscosity***
BP/Castrol	Optileb GT	220-320
Exxon/Mobil	SHC Cibus	220-320
Fuchs	Fuchs Cassida Fluid GL	220-320
Klüber	Klüberoil 4 UH1	220-320
Tetra Pak	Lubricant H1-0540, PAO v220	220
Tetra Pak	Lubricant H1-0500, PAO v320	320

* Viscosity in mm^2/sec (cSt) at 40°C (104°F)

** A synthetic oil for the gearbox must be of PAO (poly alfa olefine) type, like the Omala, that is mixable with mineral oils and does not affect rubber, sealings and paint. If the gearbox temperatur is kept to max. 70 °C (158°F), 220 cST is sufficient.

*** Conform with FDA 21 CFR 178.3570 and classified in NSF H1.

(Cont'd)

(Cont'd)

Hydraulic unit		
Recommended oil: Hydraulic oil		
Mineral type		
Supplier	**Type**	**Viscosity***
BP/Castrol	Bartran	68
Exxon/Mobil	Mobil DTE Excel	68
Shell	Tellus S2 M	68
Klüber	Lamora HLP 68	68
Synthetic Type**		
Supplier	**Type**	**Viscosity***
BP/Castrol	-	-
Exxon/Mobil	Mobil SHC 526	68
Shell	Tellus S4 ME	68
Klüber	Klüberfood 4 NH1	68
Food GradeType***		
Supplier	**Type**	**Viscosity***
BP/Castrol	Optileb HY	68
Exxon/Mobil	SHC Cibus	68
Fuchs	Fuchs Cassida Fluid HF	68
Klüber	Klüberfood 4 NH1	68

* Viscosity in mm^2/sec (cSt) at 40°C (104°F)

** A synthetic oil for the hydraulic unit must be of PAO (poly alfa olefine) type, like the Omala, that is mixable with mineral oils and does not affect rubber, sealings and paint.

*** Conform with FDA 21 CFR 178.3570 and classified in NSF H1. Required to fulfil the 3A sanitary standard.

(Cont'd)

(Cont'd)

Main drive motor		
Recommended grease		
Supplier	**Type**	**Viscosity***
BP/Castrol	Energrease LS EP 1	115
Exxon/Mobil	Mobilith SHC	100
Shell	Shell Gadus S2 V100	100
Klüber	Klüberquiet BQH 72-102	100
Food GradeType***		
Supplier	**Type**	**Viscosity***
BP/Castrol	-	-
Exxon/Mobil	Mobil grease FM 101	100
Fuchs	Fuchs Cassida RLS 2	150
Klüber	Klübersynth UH1 14-151	150

* Viscosity in mm^2/sec (cSt) at 40°C (104°F)

*** Conform with FDA 21 CFR 178.3570 and classified in NSF H1.

4.2 Oil Amount

Crankcase	Gearbox	Hydraulic unit
Approx. 100 litres (26 U.S. gallons)	Approx. 29 litres (7.7 U.S. gallons)	Approx. 9 litres (2.4 U.S. gallons)
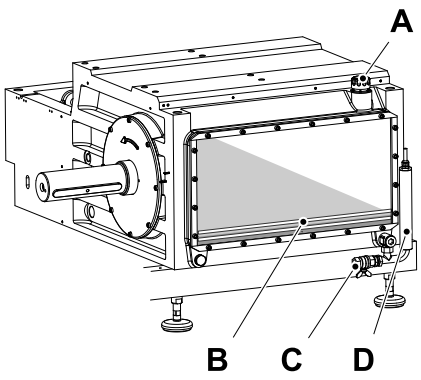	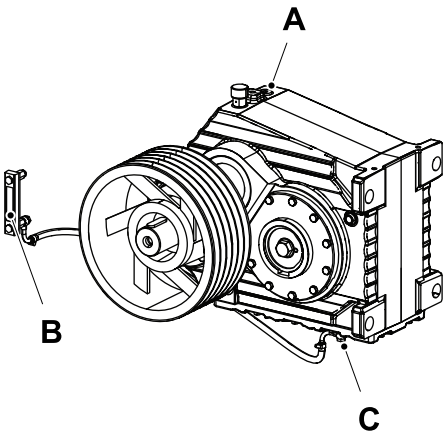	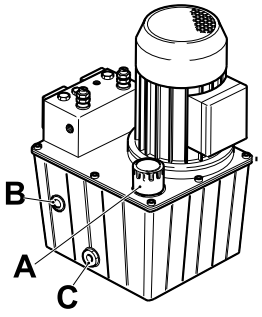
	A - Filler cap B - Level glass	C - Drain D - Level switch

This page intentionally left blank

Tetra Pak®

Label for 40 mm binder ***Note!*** *This page is generated* ***automatically.***

Tetra Pak® Homogenizer 400
5871116178 Issue 2016-10
Doc. No. OM-3477602-0101

Tetra Pak® Homogenizer 400 1(2)
5871116178 Issue 2016-10
Doc. No. OM-3477602-0101

Tetra Pak® Homogenizer 400
5871116178 Issue 2016-10
Doc. No. OM-3477602-0101

Tetra Pak® Homogenizer 400 2(2)
5871116178 Issue 2016-10
Doc. No. OM-3477602-0101

Tetra Pak® Homogenizer 400
5871116178 Issue 2016-10
Doc. No. OM-3477602-0101

Tetra Pak® Homogenizer 400 1(2)
5871116178 Issue 2016-10
Doc. No. OM-3477602-0101

Tetra Pak® Homogenizer 400
5871116178 Issue 2016-10
Doc. No. OM-3477602-0101

Tetra Pak® Homogenizer 400 2(2)
5871116178 Issue 2016-10
Doc. No. OM-3477602-0101

Tetra Pak® Homogenizer 400
5871116178 Issue 2016-10
Doc. No. OM-3477602-0101

Tetra Pak® Homogenizer 4001(3)
5871116178 Issue 2016-10
Doc. No. OM-3477602-0101

Tetra Pak® Homogenizer 400
5871116178 Issue 2016-10
Doc. No. OM-3477602-0101

Tetra Pak® Homogenizer 400 2(3)
5871116178 Issue 2016-10
Doc. No. OM-3477602-0101

Tetra Pak® Homogenizer 400
5871116178 Issue 2016-10
Doc. No. OM-3477602-0101

Tetra Pak® Homogenizer 400 3(3)
5871116178 Issue 2016-10
Doc. No. OM-3477602-0101

Tetra Pak® Homogenizer 400
5871116178 Issue 2016-10
Doc. No. OM-3477602-0101

Tetra Pak® Homogenizer 4003(3)
5871116178 Issue 2016-10
Doc. No. OM-3477602-0101

Tetra Pak® Homogenizer 400
5871116178 Issue 2016-10
Doc. No. OM-3477602-0101

Tetra Pak® Homogenizer 400 1(2)
5871116178 Issue 2016-10
Doc. No. OM-3477602-0101

Tetra Pak® Homogenizer 400
5871116178 Issue 2016-10
Doc. No. OM-3477602-0101

Tetra Pak® Homogenizer 400 2(2)
5871116178 Issue 2016-10
Doc. No. OM-3477602-0101

Tetra Pak® Homogenizer 400
5871116178 Issue 2016-10
Doc. No. OM-3477602-0101

Tetra Pak® Homogenizer 400 1(3)
5871116178 Issue 2016-10
Doc. No. OM-3477602-0101

Tetra Pak® Homogenizer 400
5871116178 Issue 2016-10
Doc. No. OM-3477602-0101

Tetra Pak® Homogenizer 400 2(3)
5871116178 Issue 2016-10
Doc. No. OM-3477602-0101

Tetra Pak® Homogenizer 400
5871116178 Issue 2016-10
Doc. No. OM-3477602-0101

Tetra Pak® Homogenizer 400 3(3)
5871116178 Issue 2016-10
Doc. No. OM-3477602-0101

Tetra Pak® Homogenizer 400
5871116178 Issue 2016-10
Doc. No. OM-3477602-0101

Tetra Pak® Homogenizer 400 3(3)
5871116178 Issue 2016-10
Doc. No. OM-3477602-0101

Tetra Pak® Homogenizer 400
5871116178 Issue 2016-10
Doc. No. OM-3477602-0101

Tetra Pak® Homogenizer 400
5871116178 Issue 2016-10
Doc. No. OM-3477602-0101

Tetra Pak® Homogenizer 400
5871116178 Issue 2016-10
Doc. No. OM-3477602-0101

Tetra Pak® Homogenizer 400 1(3)
5871116178 Issue 2016-10
Doc. No. OM-3477602-0101

Tetra Pak® Homogenizer 400 1(2)
5871116178 Issue 2016-10
Doc. No. OM-3477602-0101

Tetra Pak® Homogenizer 400 2(3)
5871116178 Issue 2016-10
Doc. No. OM-3477602-0101

Tetra Pak® Homogenizer 400 2(2)
5871116178 Issue 2016-10
Doc. No. OM-3477602-0101

Tetra Pak® Homogenizer 400 3(3)
5871116178 Issue 2016-10
Doc. No. OM-3477602-0101