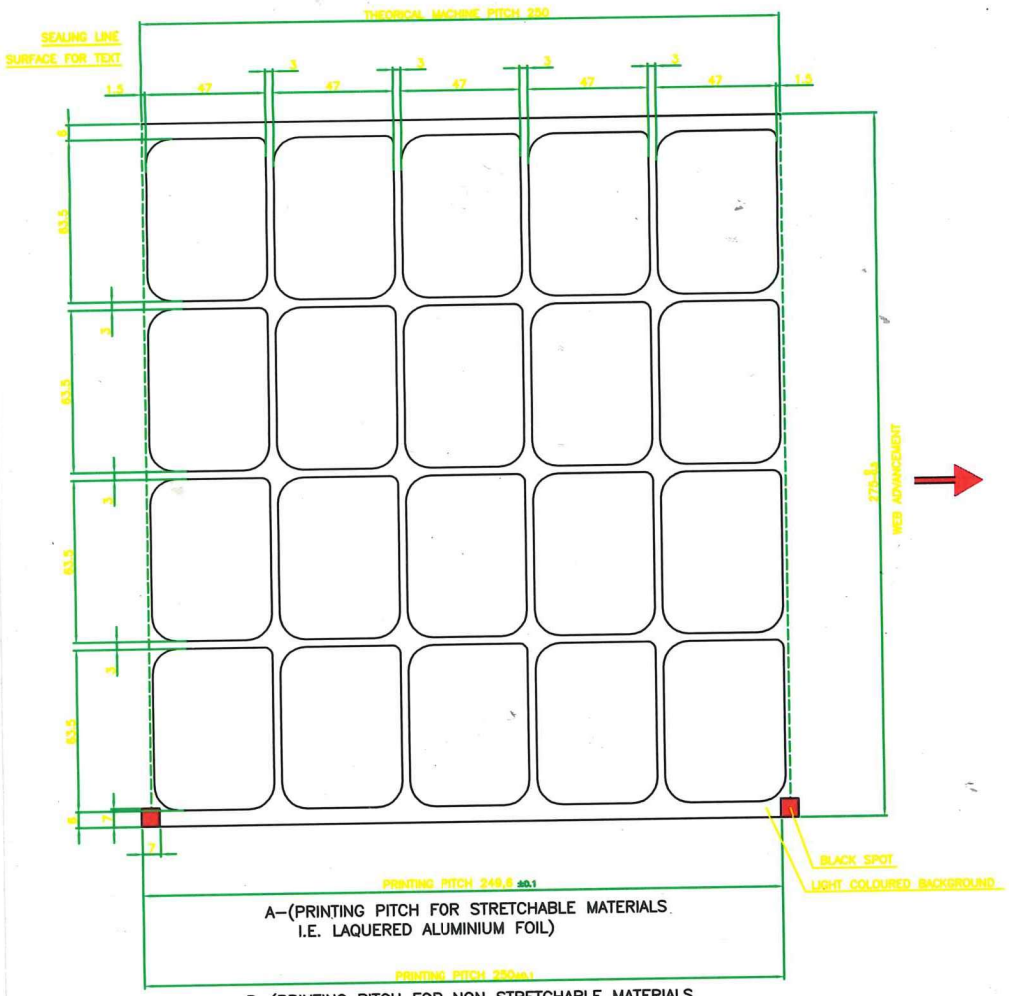


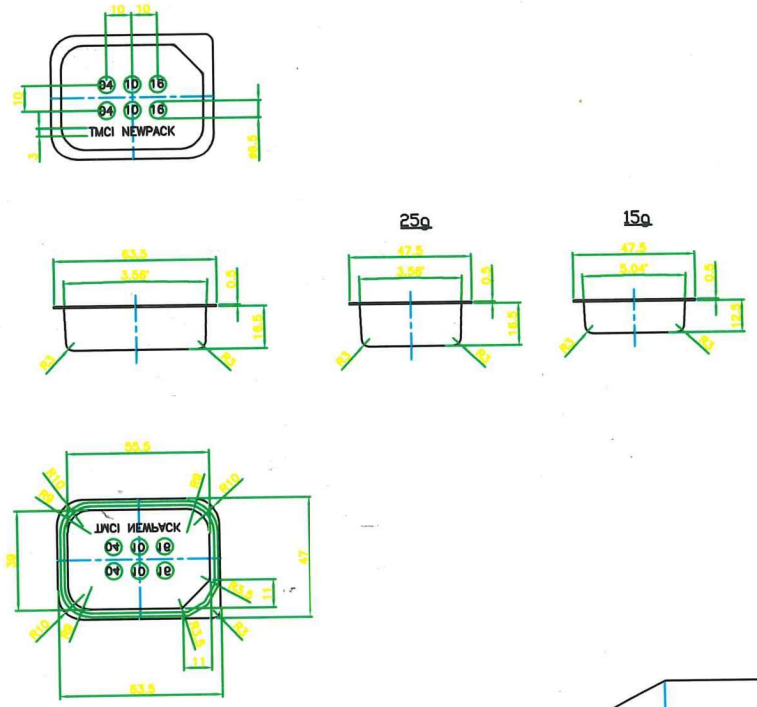


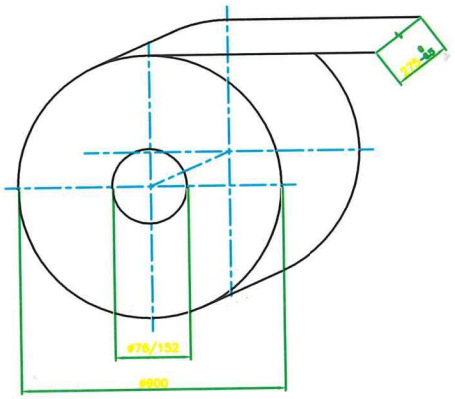


PLASTIC WEB PS-EVO-PS / PVC / PS / HIPS

THICKNESS 0.5 mm (to be tested)

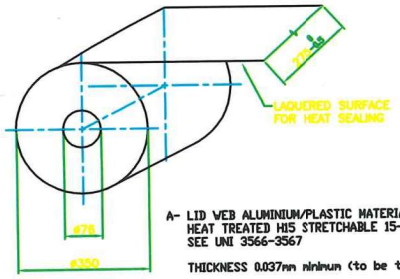


A- LID WEB ALUMINIUM/PLASTIC MATERIAL
HEAT TREATED H15 STRETCHABLE 15-25%
SEE UNI 3566-3567

THICKNESS 0.037mm minimum (to be tested)

OR

B- NON STRETCHABLE LID WEB

THICKNESS 0.037mm minimum (to be tested)

FOR ACCEPTANCE _____

DATE _____

| PRODUCT DATA | | |
|---|---|---|
| JAM/MARMELADE | DENSITY[g/cm3] | 1.1 minimum |
| HONEY | DENSITY[g/cm3] | 1.4 |

| Pos. | Mod. | Description | | |
|---|---|---|---|---|
| Qt. n° | | Production - Capacity | Country | Version |

TMCI NEWPACK

Customer: FM100-20

Description: FILM FOR CUPS

Date: 29-05-15 | Drawing by: EC | Size: A1 | Scale: 1:1 | Drawing Number: 0470.05

no reproduction is allowed without permission from TMCI PADOVA S.p.A.

Printed on