TeM

Technical Manual

Tetra Pak® Homogenizer 400

5871116178

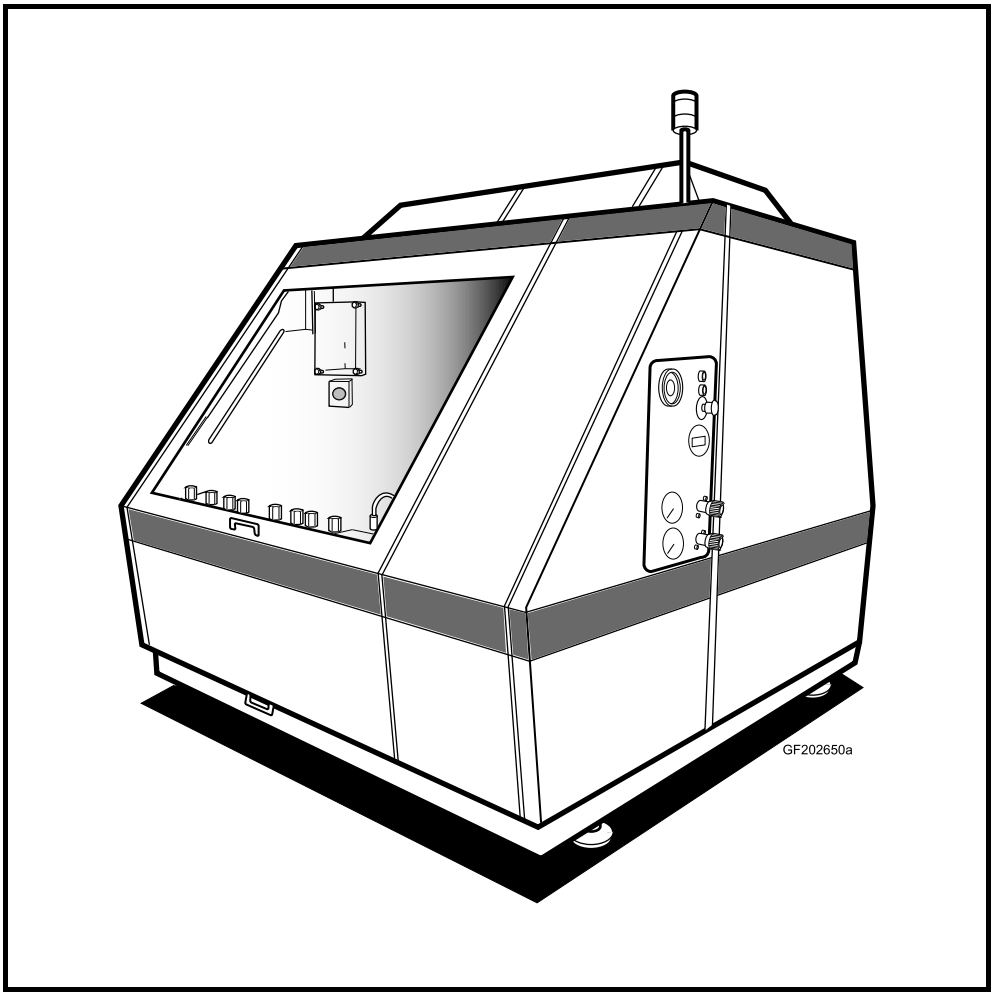

WARNING

Read and follow all safety precaution instructions throughout this document and on safety signs attached to this equipment.

Failure to follow all safety precaution instructions could result in death or serious injury.

Tetra Pak®

Doc. No. TeM-3285754-0101

Copyright © 2016 Tetra Pak International S.A.

All rights reserved. No part of this document may be reproduced or copied in any form or by any means without written permission from Tetra Pak Processing Components AB.

, Tetra Pak, and all other trademarks displayed in this document are the property of the Tetra Pak International SA. Tetra Pak Processing Components AB together with Tetra Pak International SA form part of ‘the Tetra Pak Group’. The content of this document is in accordance with the design and construction of the machine or equipment at the time of publishing. The Tetra Pak Group reserves the right to introduce design modifications without prior notice.

The English language version of this document contains the original instructions. All other language versions are translations of the original instructions.

This document was produced and printed by:

Tetra Pak Processing Components AB
Ruben Rausings gata
S-221 86 Lund
Sweden

Doc. No. TeM-3285754-0101

Issue 2016-10

This document is valid for:

5871116178

Serial No. / Machine No.
Year of Manufacture Sign.

i Introduction
ii Safety Precautions
1 Installation
2 Maintenance
3 Spare Parts
4 Preventive Maintenance Recommendations
5 Technical Documents

TeM
Technical Manual

Tetra Pak® Homogenizer 400 5871116178

Machine or equipment configurations that this document is valid for are described on the next page.

Doc. No. TeM-3285754-0101
Issue 2016-10

Tetra Pak®
Tetra Pak Processing Components AB

Valid for:

Name	Drawing Specification and Development Step	Additional Information

Update Log for Doc. No. TeM-3285754-0101

This table shows all changes made to this document, including installed rebuilding kits, added or removed pages. Page numbering on added pages begins with UP.

Date	Installed Kit	Added Pages (Doc. No.)	Removed Pages	Signature

Date	Installed Kit	Added Pages (Doc. No.)	Removed Pages	Signature

i Introduction

Description

This chapter contains basic information about this manual and the related Tetra Pak® equipment.

Description i-2

Abbreviations and Terminology i-5

Manual Information i-6

Delivered Manuals i-6

EM i-6

OM i-6

TeM i-6

Page Layout i-7

Page Numbering i-8

Typographical Conventions i-8

Symbols i-9

Machine Introduction i-10

Intended Use of the Equipment i-10

Manufacturer i-10

Identification i-11

CE Classification i-11

3-A Compliance i-11

EAC Compliance i-11

Machine Plate i-12

How to Use This TeM i-13

Installation Chapter i-13

Maintenance Chapter i-13

Spare Parts Catalogue Chapter i-13

Page Layout i-13

Example: Locate a Part Number i-14

TPMS Chapter i-15

Technical Documents Chapter i-15

Support and Feedback i-16

This page intentionally left blank

Abbreviations and Terminology

Abbreviation/Terminology	Meaning	Translation
CE	Conformité Européenne/European Conformity	Conformité Européenne/European Conformity
CSA	Canadian Standards Association	Canadian Standards Association
EAC	Eurasian Conformity	Eurasian Conformity
EM	Electrical Manual	Electrical Manual
IM	Installation Manual	Installation Manual
ISO	International Standards Organization	International Standards Organization
OM	Operation Manual	Operation Manual
SDS	Safety Data Sheet	Safety Data Sheet
SPC	Spare Parts Catalogue	Spare Parts Catalogue
TeM	Technical Manual	Technical Manual
TPMS	Tetra Pak Maintenance System	Tetra Pak Maintenance System

Manual Information

The Tetra Pak Group recommends reading all delivered manuals carefully. Make sure that the delivered manuals are available to personnel who operate or maintain the equipment.

It is important to keep this manual for the lifetime of the equipment and to pass the manual on to any subsequent holder or user.

Any item that is named specifically in this manual is to be considered a designated item for the equipment. Designated items are verified by the Tetra Pak Group for use with the equipment.

The Tetra Pak Group will not be held responsible for any damage, loss, injury, or death caused by not following the instructions in the manuals that accompany this equipment, or by a failure to use designated items specified in the manuals that accompany this equipment.

Delivered Manuals

Manuals delivered with this equipment:

EM

The Electrical Manual provides technicians with information about the equipment's electrical system.

OM

The Operation Manual provides the operator with information on handling and operating the equipment before, during, and after production.

TeM

The Technical Manual provides technicians with information which can be:

- information required to safely install the equipment
- information required to maintaining the equipment
- information about the machine's/equipment's electrical system
- information necessary to order spare parts from the Tetra Pak Group
- other technical information

Page Layout

Every main page in a manual contains a header and a footer. The page header contains the chapter name (1) and the section name (2). The page footer contains the page number (3), and the document number (4). See also the Page Numbering section.

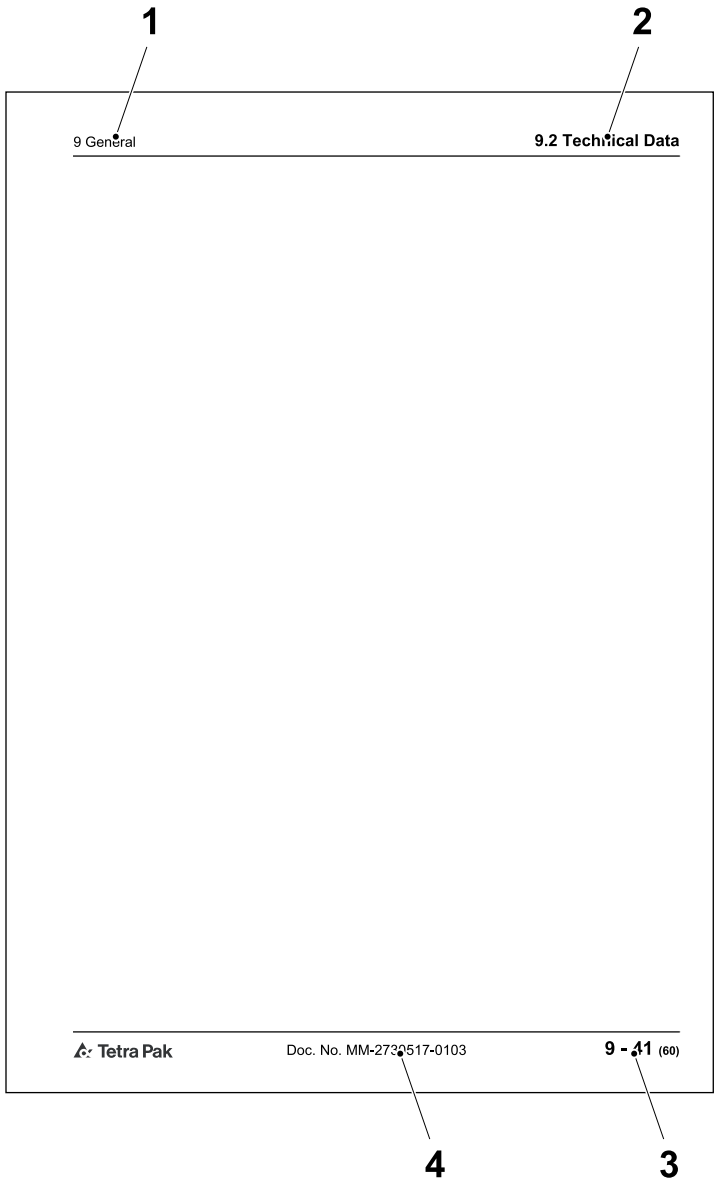

1 Chapter name
2 Section name
3 Page number
4 Document number

Page Numbering

A page number has three parts:

- chapter number (1)
- consecutive page number (2) within the chapter
- total number of pages (3) in the chapter

Note! The letters UP may replace the chapter number (1) if the manual includes update pages. The consecutive page number (2) and the total number of pages (3) of update pages do not follow the existing sequential page numbering of the chapter.

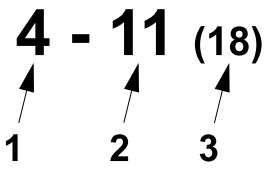

1 Chapter number
2 Consecutive page number
3 Total number of pages

Typographical Conventions

Physical buttons on the operator panel, emergency stop devices, program steps, and program tasks are printed in CAPITAL LETTERS.

Names of buttons, entry fields, menu items, or other objects that allow the user to control the user interface are printed in `Courier`.

Information that is displayed on the user interface, is to be repeated in the user manual, but is not used to control the user interface, is printed in `COURIER CAPITAL LETTERS`.

Cross-references are underlined.

In position lists, the numbers in square brackets following the items in the lists refer to the position numbers in the Spare Part List.

Symbols

Symbols used in illustrations.

	A pointer arrow indicates the position of an object.
	A zoom arrow indicates that an object view is enlarged. The arrow points towards the enlarged view of the object.
	A rotation movement arrow indicates rotational movement of an object. The arrow points in the direction of rotation.
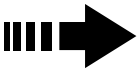	A straight movement arrow indicates movement of an object. The arrow points in the direction of movement.

Machine Introduction

Intended Use of the Equipment

This Tetra Pak equipment is intended for use according to the specifications in **Technical Data** (see **Technical Manual**) and related documents.

All other use is prohibited. Tetra Pak will not be held responsible for injury or damage if the equipment is used for any other purpose than the intended use described above.

Manufacturer

This Tetra Pak® equipment is manufactured by

Tetra Pak Processing Components AB
Ruben Rausings gata
S-221 86 Lund
Sweden

Identification

CE Classification

This equipment complies with the basic health and safety regulations of the European Economic Area (EEA).

3-A Compliance

The equipment complies with the 3-A Sanitary Standards for Homogenizers and Reciprocating Pumps if marked with the 3-A sign.

EAC Compliance

The equipment complies with the regulations of the Eurasian Customs Union.

Machine Plate

The machine plate carries data needed when contacting Tetra Pak concerning this specific equipment.

Make sure that the equipment data in the front pages of this manual corresponds to the machine plate data and the machine specification.

The first illustration shows an example of a machine plate for the Eurasian Customs Union.

The second illustration shows an example of a machine plate for other markets.

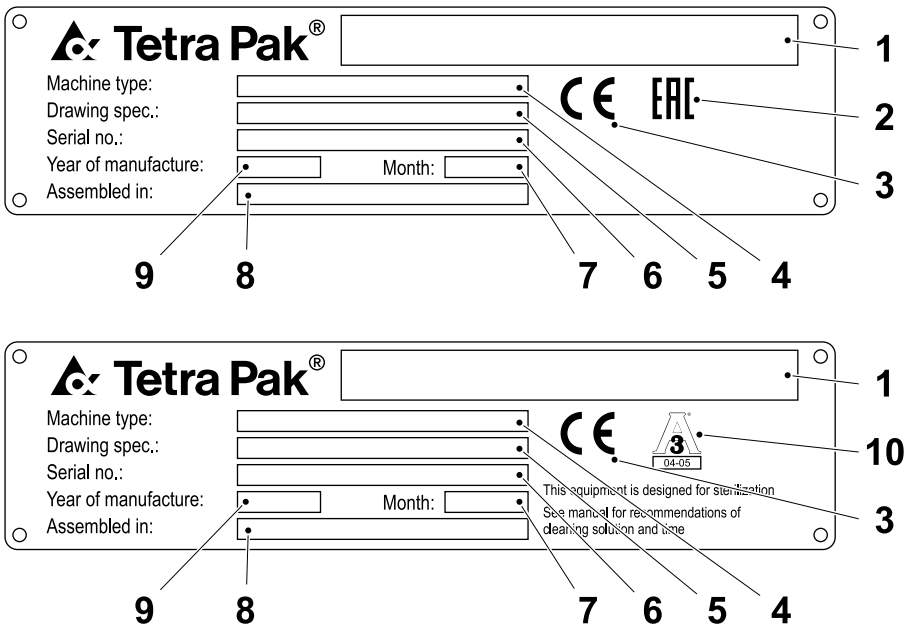

1 Manufacturer/address
2 EAC mark
3 CE mark
4 Machine type
5 Design pressure
6 Machine serial number
7 Month of assembly
8 Assembly place
9 Year of manufacture
10 3A mark

How to Use This TeM

Installation Chapter

The Installation Chapter provides technical specifications and preparatory information needed during quotation of the equipment and during the entire installation process. It also provides instructions on how to mechanically install, commission, and validate the performance of the equipment, and how to disassemble and remove the equipment.

Maintenance Chapter

The Maintenance Chapter provides maintenance procedures for the different machine groups.

Maintenance procedures in this manual are connected to the Tetra Pak Maintenance System, TPMS. See the TPMS section.

Spare Parts Catalogue Chapter

Page Layout

The main pages in a Spare Parts Catalogue (SPC) consist of an illustration page and a corresponding list page. The information to be found on these pages is described below, listed from left to right:

In the header of the illustration page

- Machine number
- Group name
- Assembly drawing number
- Page number

In the header of the list page

- Group number
- Assembly drawing number

In the footer of the list page

- Machine number
- Group name
- Group number
- Page number

In the lists

- Position number
- Part or subgroup number
- Unit
- Quantity

(Cont'd)

(Cont'd)

- Subgroup name or part description

Example: Locate a Part Number

a) Find the machine group you are looking for in the table of contents.

b) Go to the corresponding page number.

c) Locate the part that you are looking for on the group illustration and note the parts position number.

d) The part number and part description are listed beside the position number on the list page.

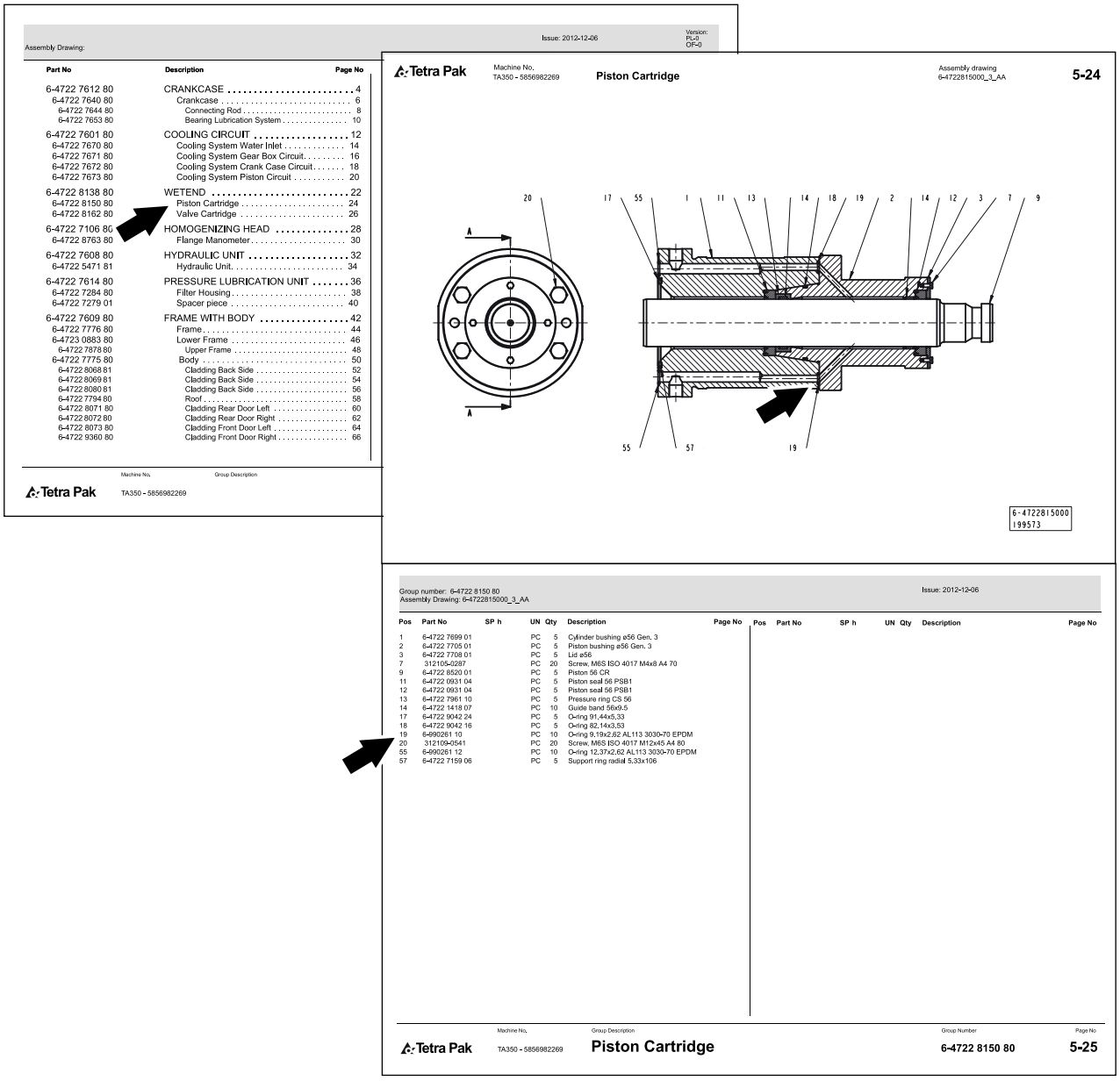

Assembly Drawing: Issue: 2012-12-06 Version: PL=0 OF=0

Part No	Description	Page No
6-4722 7612 80	CRANKCASE	4
6-4722 7640 80	Crankcase	6
6-4722 7644 80	Connecting Rod	8
6-4722 7653 80	Bearing Lubrication System	10
6-4722 7601 80	COOLING CIRCUIT	12
6-4722 7670 80	Cooling System Water Inlet	14
6-4722 7671 80	Cooling System Gear Box Circuit	16
6-4722 7672 80	Cooling System Crank Case Circuit	18
6-4722 7673 80	Cooling System Piston Circuit	20
6-4722 8138 80	WETEND	22
6-4722 8150 80	Piston Cartridge	24
6-4722 8162 80	Valve Cartridge	26
6-4722 7106 80	HOMOGENIZING HEAD	28
6-4722 8763 80	Flange Manometer	30
6-4722 7608 80	HYDRAULIC UNIT	32
6-4722 5471 81	Hydraulic Unit.	34
6-4722 7614 80	PRESSURE LUBRICATION UNIT	36
6-4722 7284 80	Filter Housing	38
6-4722 7279 01	Spacer piece	40
6-4722 7609 80	FRAME WITH BODY	42
6-4722 7776 80	Frame	44
6-4723 0883 80	Lower Frame	46
6-4722 7878 80	Upper Frame	48
6-4722 7775 80	Body	50
6-4722 8068 81	Cladding Back Side	52
6-4722 8069 81	Cladding Back Side	54
6-4722 8080 81	Cladding Back Side	56
6-4722 7794 80	Roof	58
6-4722 8071 80	Cladding Rear Door Left	60
6-4722 8072 80	Cladding Rear Door Right	62
6-4722 8073 80	Cladding Front Door Left	64
6-4722 9360 80	Cladding Front Door Right	66

Machine No. Group Description
Tetra Pak TA350 - 5856982269

Tetra Pak Machine No. TA350 - 5856982269 **Piston Cartridge** Assembly drawing 6-4722815000_3_AA **5-24**

6-4722815000
199573

Group number: 6-4722 8150 80
Assembly Drawing: 6-4722815000_3_AA
Issue: 2012-12-06

Pos	Part No	SP h	UN	Qty	Description	Page No
1	6-4722 7699 01		PC	5	Cylinder bushing ø56 Gen. 3	
2	6-4722 7705 01		PC	5	Piston bushing ø56 Gen. 3	
3	6-4722 7708 01		PC	5	Lid ø56	
7	312105-0287		PC	20	Screw, M6S ISO 4017 M4x8 A4 70	
9	6-4722 8520 01		PC	5	Piston 56 CR	
11	6-4722 0931 04		PC	5	Piston seal 56 PSB1	
12	6-4722 0931 04		PC	5	Piston seal 56 PSB1	
13	6-4722 7961 10		PC	5	Pressure ring CS 56	
14	6-4722 1418 07		PC	10	Guide band 56x9.5	
17	6-4722 9042 24		PC	5	O-ring 91,44x5,33	
18	6-4722 9042 16		PC	5	O-ring 82,14x3,53	
19	6-990261 10		PC	10	O-ring 9,19x2,62 AL113 3030-70 EPDM	
20	312109-0541		PC	20	Screw, M6S ISO 4017 M12x45 A4 80	
55	6-990261 12		PC	10	O-ring 12,37x2,62 AL113 3030-70 EPDM	
57	6-4722 7159 06		PC	5	Support ring radial 5,33x106	

Machine No. Group Description Group Number Page No
Tetra Pak TA350 - 5856982269 **Piston Cartridge** **6-4722 8150 80** **5-25**

TPMS Chapter

TPMS is the maintenance methodology to handle all maintenance-related work processes from development and the whole life cycles for Tetra Pak machines and equipment. The maintenance checklists are designed to include latest updates of our recommendations to meet the demands for fewer unscheduled stops, reduced waste, and less interference with production.

Technical Documents Chapter

The Technical Documents Chapter contains the following documents:

- Technical Data
- Test Record
- Declaration of Conformity (if applicable)

Support and Feedback

For assistance when operating this equipment, or other inquiries, comments, or suggestions, pose the questions or give feedback by contacting the nearest Tetra Pak® representative. If access to the Tetra Pak intranet is available, contact Liaison via Query by typing QuTI-P in the address field of your browser. If access to QuTI-P is not available, request access by contacting the Global Service Desk.

ii Safety Precautions

Description

Safety Precaution Instructions

WARNING

Read and understand this manual before using the machine.
Failure to follow safety precautions and instructions can result in death or serious injury.

Description ii-2

Safety Messages Description ii-5

Personnel Requirements ii-6

Skilled Person ii-6

Instructed Person ii-6

Safety Signs ii-7

Locations of Safety Signs ii-7

Protective Devices ii-8

Emergency Stop ii-8

Emergency Stop Buttons ii-8

Safeguards ii-9

Safe Manual Handling ii-11

Personal Protection ii-12

Noise ii-12

Entanglement ii-12

Hazardous Substances ii-13

Disposal of Chemical Substances ii-13

Cleaning Solutions ii-13

Emergency Procedures ii-13

Eyes ii-13

Skin ii-14

Inhalation ii-14

Ingestion ii-14

Personal Protective Equipment ii-14

Supply Systems ii-15

Definition of Lockout Procedure ii-15

Electrical Supply ii-15

Residual Voltage ii-15

Electrical Cabinet ii-15

Air Supply ii-16

Steam Supply ii-16

Water Supply ii-16

Safety Messages Description

A safety message is always accompanied by a safety alert symbol and a signal word.

The safety alert symbol is used to alert about potential personal injury hazards. To avoid hazards, obey all safety messages that follow this symbol.

The following safety alert symbols and signal words are used in this manual to inform the user of hazards.

DANGER	Danger indicates an imminently hazardous situation which, if not avoided, **will** result in **death or serious injury**.
WARNING	Warning indicates a potentially hazardous situation which, if not avoided, **could** result in **death or serious injury**.
CAUTION	Caution indicates a potentially hazardous situation which, if not avoided, **may** result in **minor or moderate injury.** It may also be used to alert against unsafe practices.
CAUTION	Caution without the safety alert symbol indicates a potentially hazardous situation which, if not avoided, **may** result in **property damage**.

Personnel Requirements

Note! Personnel includes all persons working on or near this equipment.

Only skilled or instructed persons are allowed to work with this equipment.

Skilled Person

A skilled person must have relevant education and experience to enable him or her to identify hazards, analyse risks, and avoid hazards which electricity, machinery, chemicals, other energies, and supply systems on this equipment can create.

Skilled persons must meet local regulations, such as certifications and qualifications for working with these energies and systems.

Instructed Person

An instructed person must be adequately advised or supervised by a skilled person. The skilled person enables the instructed person to identify hazards, analyse risks, and avoid hazards which electricity, machinery, chemicals, other energies, and supply systems on this equipment can create.

Safety Signs

WARNING

Damaged or missing safety signs.
Safety signs are used to indicate safety hazards. If the signs are missing or damaged, they can not fulfil this function. Replace all missing or damaged safety signs immediately.

Safety signs are attached to the equipment. The table below lists all the signs that are used, and illustrations show their locations on the equipment. Each position number refers to two standards of a safety sign in the table, but only one is used on the equipment.

- Make sure that each safety sign is legible and in its correct position after installation and maintenance.
- Replace all missing or damaged safety signs immediately.

Pos	ISO Standard	ANSI Standard
1		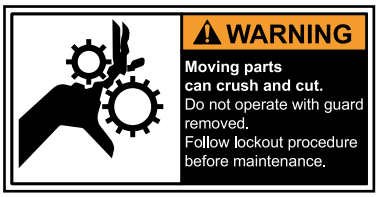
	Moving parts can crush and cut. Do not operate with guard removed. Follow lockout procedure before maintenance.	

Locations of Safety Signs

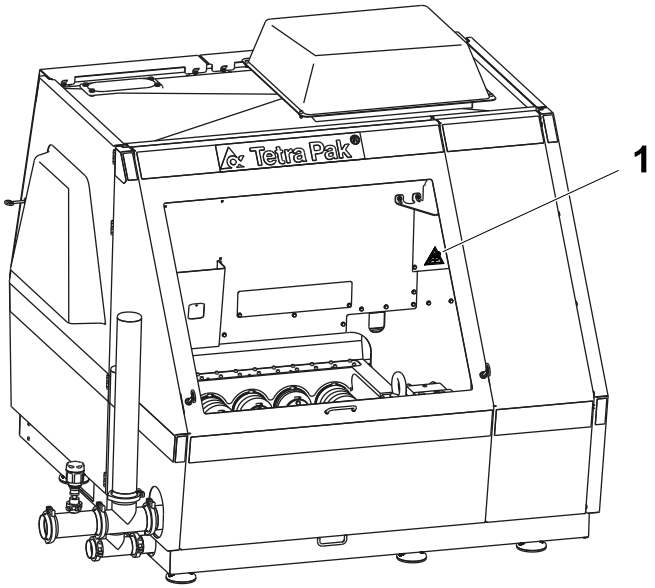

Protective Devices

There are different kinds of protective device designed to ensure safe use of the equipment. See the sections below.

WARNING
Hazardous zones.
Hazardous zones are safeguarded and provided with protective devices. Do not inch or run this equipment if any protective device is inoperative.

Change inoperative components of the safety system immediately.

Emergency Stop

DANGER
Hazardous voltage.
Will shock, burn, or cause death.
Hazardous voltage remains ON after activating an EMERGENCY STOP.

Emergency stop devices are used to stop this equipment immediately in a hazardous situation. Learn the positions of all emergency stop devices and how to use them.

Emergency Stop Buttons

Push one of the EMERGENCY STOP buttons to stop this equipment immediately.

The location of each EMERGENCY STOP button is shown by an arrow.

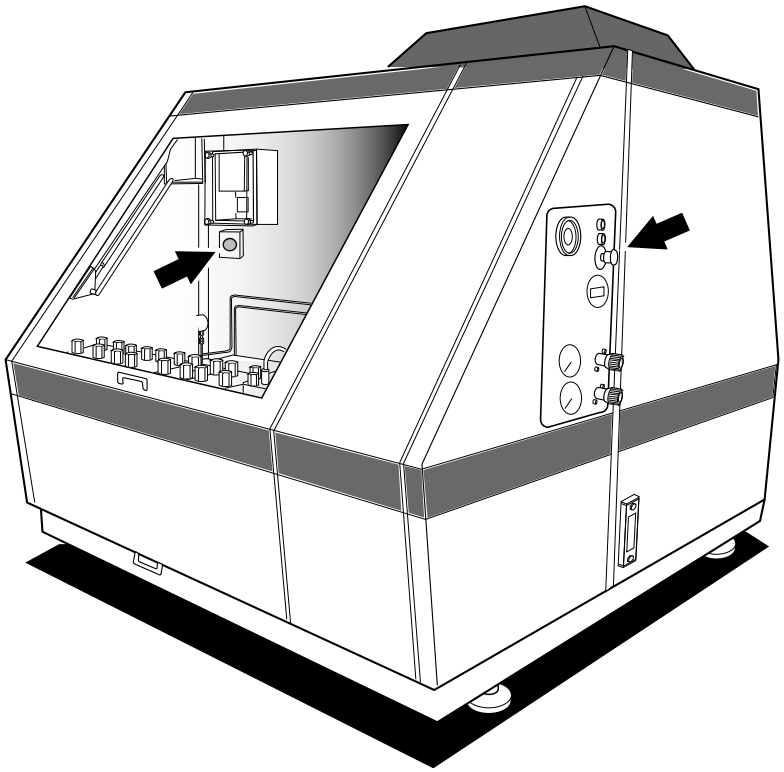

Safeguards

WARNING
Moving machinery parts.
Never defeat or bypass the interlocking devices.

Movable guards, for example, doors and covers leading to hazardous zones, are fitted with interlocking devices where required. These devices are usually electric safety switches that are parts of the safety system and must never be defeated, bypassed, or otherwise made inoperative.

Where movable guards (doors) are equipped with means to be locked in a non closed position, any person with the intention to preside, for any reason, behind such a guard must lock the guard in the non closed position by use of a padlock.

Note! For work on the electrical equipment, the electrical power must also be disconnected.

CAUTION
Corners and edges.
Close the doors, guards, or parts of the equipment unless they must be open during work.

CAUTION
Burn hazard.
Parts of the equipment protected by guards may be hot after operation. Allow components to cool down or use personal protective equipment.

After installation and maintenance, and before this equipment is inched or run, check that all safeguards are in place and that they operate correctly.

CAUTION
Equipment damage.
The equipment can be damaged if it is not stopped in the correct way. Never stop this equipment by opening a movable guard, for example, a door or cover, equipped with an interlocking device.

(Cont'd)

(Cont'd)

The location of each interlocking device is shown by an arrow.

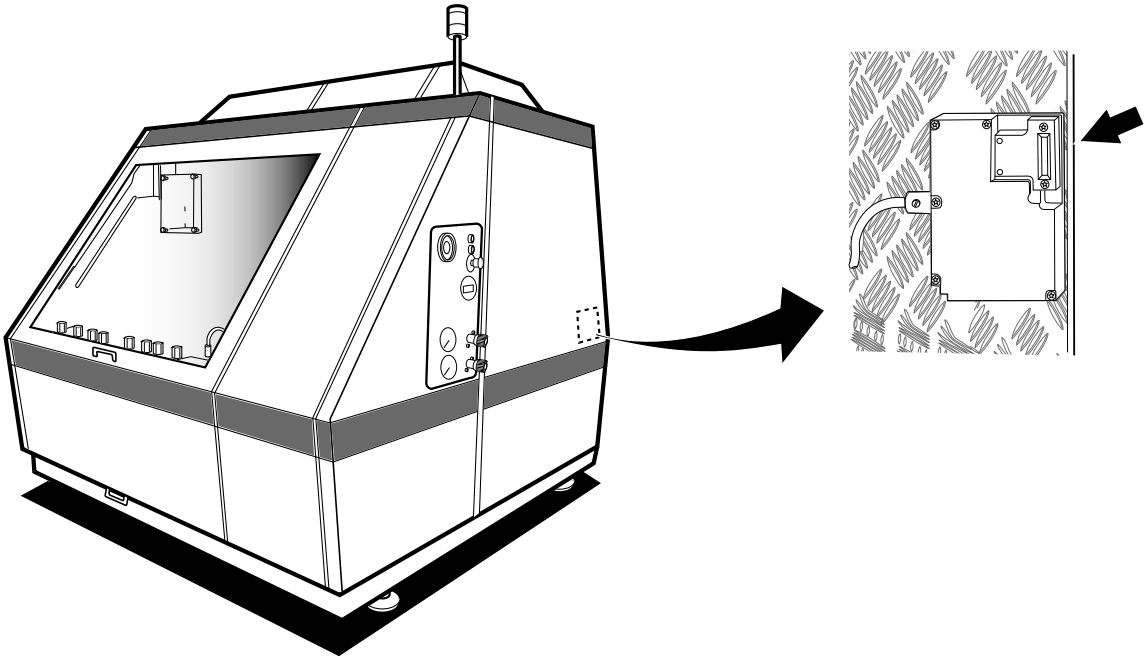

Safe Manual Handling

Use mechanical lifting aids whenever possible. If mechanical lifting aids are not available, do not attempt to lift loads over 23 kg without the assistance of a colleague. Avoid lifting below knee height and above shoulder height. If it is necessary to lift from the floor, follow the instructions below to reduce the risk of back and disc injuries.

- Use safety shoes and be sure that the surface of the floor is not slippery.
- Get close to the load.
- Take a wide stance and find the best positions for your feet.
- Bend your hips and knees, and use your leg muscles.
- Keep the load close to your body.
- Do not twist your body while moving the load.
- Take small steps when turning.

In order to reduce the risk of injury to discs and back muscles, be careful to not bend or twist your back when lifting. Keep the load close to your body to reduce the strain on your back.

To reduce the ergonomic risks to each individual operator, job rotation is recommended, so that recovery and variety are provided.

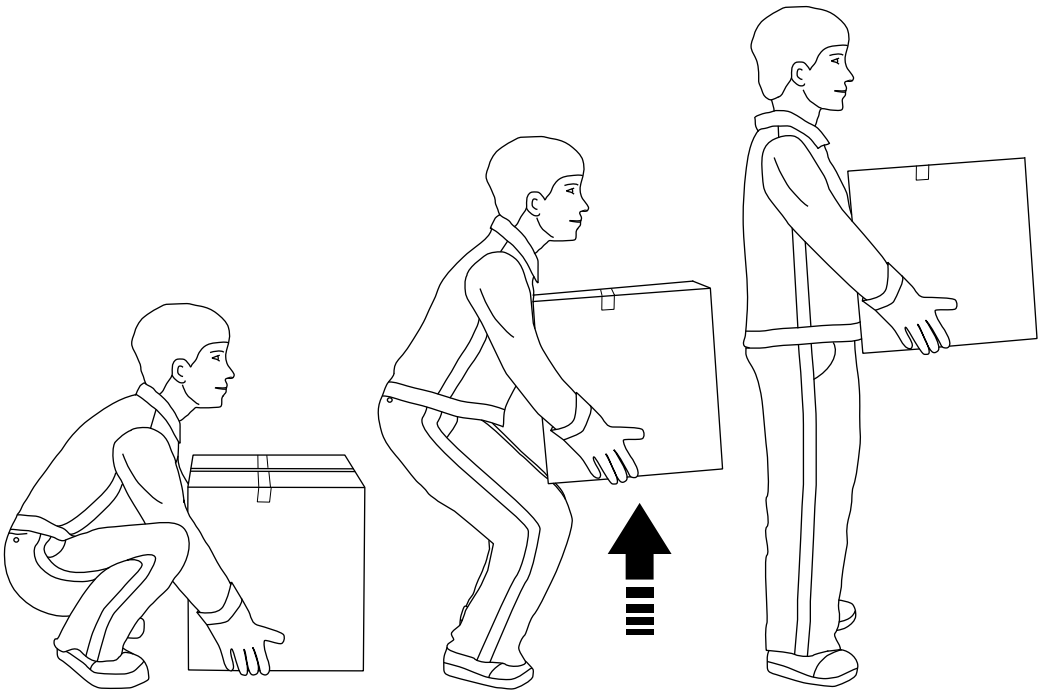

Personal Protection

This section applies to all personnel at all times when this equipment is in operation. For special personal protective equipment required when handling hazardous substances, see the Hazardous Substances section.

Noise

WARNING

Hazardous noise.
Can cause impaired hearing.
Wear hearing protection whenever this equipment is in operation.

Entanglement

WARNING

Risk of entanglement.
Do not wear jewellery or loose clothing when working on or near this equipment.
Restrain long hair with, for example, clips or rubber bands.

Hazardous Substances

WARNING

Contact with chemicals can cause death, serious injury, or illness.
Always read and follow the instructions in the safety data sheet supplied by the manufacturer or local supplier, when handling chemicals.

Make sure that

- the safety data sheet is available
- preparations have been done to ensure that the stated safety measures in the safety data sheet can be followed
- the locations of the first aid equipment are learned in order to act immediately in case of an accident

Disposal of Chemical Substances

Always read and follow the disposal instructions in the safety data sheet supplied by the manufacturer or local supplier.

It is strongly recommended that used chemical containers are

- disposed of according to the instructions immediately after use
- not used as disposal containers for other chemicals in order to avoid uncontrolled chemical reactions within the container

Cleaning Solutions

WARNING

Corrosive chemical.
Wear personal protective equipment.

Cleaning solutions normally contain caustic soda (NaOH) or nitric acid (HNO_3). These chemicals may cause burning to skin and eyes. Follow the instructions given by the supplier.

Emergency Procedures

If there is an accident, rinse the affected area as soon as possible with large amounts of water.

Eyes

If splashes of cleaning solution come in contact with the eyes

- wash the eyes thoroughly with lukewarm water for 15 minutes (keep eyelids wide apart)
- call for medical attention immediately

Skin

If cleaning solution comes into contact with skin or clothes

- rinse immediately with plenty of water
- call for medical attention immediately if skin burns appear
- thoroughly wash the clothes before wearing them again

Inhalation

If irritation or pain is experienced due to having **inhaled** vaporized cleaning solution

- leave the affected area and get some fresh air
- call for medical attention if the symptoms get worse

Ingestion

If cleaning solution is swallowed

- do not attempt to cause vomiting
- drink large amounts of lukewarm water to dilute the cleaning solution
- call for medical attention immediately

Personal Protective Equipment

The personal protective equipment recommended to wear during normal operation and maintenance is:

- hearing protection
- protective shoes or boots made of PVC, PE plastic, or rubber
- protective clothes

During handling of chemicals, manual cleaning of equipment and maintenance of machinery that have used chemicals add following extra protection:

- protective goggles (for instance, TP No. 90303-11), tight fitting
  If there is a risk of splashes, a visor is a suitable complement
- protective gloves made of neoprene (for instance, TP No. 90303-12), nitrile, or butyl rubber
- protective apron (for instance, TP No. 90303-13), or protective suit when handling larger amounts of chemicals
- proper respiratory equipment, if ventilation is insufficient

Supply Systems

Definition of Lockout Procedure

A lockout procedure is a procedure to put each necessary energy isolating device in its safe position to prevent the energisation of the equipment, such as when a maintenance procedure should be carried out.

A lockout is the use of a device, for example, a padlock, to make sure that an energy isolating device cannot be operated.

An energy isolating device is a mechanical device that physically prevents transmission or release of energy, such as an electrical supply disconnecting device.

A detailed instruction for the specific lockout procedure(s) for this equipment is found in the Maintenance Manual.

Electrical Supply

DANGER

Hazardous voltage and moving machinery.
The electrical supply disconnecting device must be turned off and secured with a lock before any work with the equipment that requires the electrical supply to be disconnected.

Note! The key to the lock must be removed by the technician and retained in his/her possession until all work is completed. (The lock is not a part of the delivery.)

Certain maintenance procedures may require power supply systems to be on. These exceptions are clearly stated in the manual.

Residual Voltage

DANGER

Hazardous voltage.
Will shock, burn, or cause death.
After the electrical supply disconnector is turned off, residual voltage remains in the capacitor circuits. Wait five minutes before opening the enclosure containing these circuits. Ensure that no residual voltage remains on the capacitors before touching them.

Electrical Cabinet

DANGER

Hazardous voltage.
Will shock, burn, or cause death.
Parts behind doors to electrical enclosures may be live. The electrical supply disconnector must be turned off and secured with a lock before performing maintenance inside the electrical cabinet.

Note! The key to the lock must be removed by the technician and retained in his/her possession until all work is completed.

The use of a key or a tool is necessary to access to the electrical cabinet.

(Cont'd)

(Cont'd)

Make sure that the electrical cabinet doors are closed after working inside the electrical cabinet. Doors with locks must be locked.

Air Supply

WARNING

Compressed air and moving machinery.
Close the main air valve and lock it, and safely release compressed air from the air system before any work with the equipment that requires the air supply to be closed.

Note! The key to the lock must be removed by the technician and retained in his/her possession until all work is completed. (The lock is not a part of the delivery.)

Certain procedures may require air supply systems to be on. These exceptions are clearly stated in the manuals.

Steam Supply

WARNING

Hot steam can cause scalds.
Pressurised steam can be discharged unexpectedly.
Close the main steam valve and lock it, and safely vent all steam pressure from the steam system before any work on parts with steam, such as pipes and valves, that requires the steam supply to be closed.

Note! The key to the lock must be removed by the technician and retained in his/her possession until all work is completed. (The lock is not a part of the delivery.)

Certain procedures may require steam supply systems to be on. These exceptions are clearly stated in the manuals.

WARNING

Hot parts can cause severe burns.
Pipes, valves, and other parts containing steam can be extremely hot. Do not touch hot parts.

Water Supply

CAUTION

Water under pressure.
Close the main water valves before any work with the equipment that requires the water supply to be closed.

Certain procedures may require water supply systems to be on. These exceptions are clearly stated in the manuals.

1 Installation

1.1 Introduction 1-5
1.1.1 Prior to Operation 1-5
1.1.2 Technical Data 1-5
1.2 Preparatory Work 1-6
1.2.1 General Dimensions 1-6
1.2.2 Service Area 1-7
1.2.3 Floor 1-8
1.2.4 Product Supply 1-9
1.2.4.1 Quality of Piping and Welding 1-9
1.2.4.2 Recommended Inlet Pressures 1-9
1.2.4.3 Product Inlet - Outlet 1-11
1.2.4.3.1 Position 1-11
1.2.4.3.2 Guidelines for Connecting Piping 1-14
1.2.5 Water and Steam Supply 1-15
1.2.6 Service Media 1-16
1.2.6.1 Water 1-16
1.2.6.1.1 General Requirements 1-16
1.2.6.1.2 Water Hardness 1-17
1.2.6.1.3 Corrosion 1-17
1.2.6.1.4 Abrasiveness 1-17
1.2.6.2 Steam 1-17
1.2.6.2.1 General Requirements 1-17
1.2.7 General Cleaning Requirements 1-18
1.2.7.1 CIP 1-18
1.2.7.2 Cleaning 1-18
1.2.7.3 Sterilisation 1-18
1.2.7.4 Pulsation Damper 1-18
1.2.8 Electrical Supply 1-19
1.2.8.1 Starter Panel 1-20
1.2.8.2 External Control Panel 1-20
1.2.8.3 Simplified Overview of Signal Flow 1-21

1.2.8.4 Starter Panel - Description 1-23
1.2.8.4.1 Feedback Signals 1-23
1.2.8.4.2 UPS (Uninterrupted Power Supply) 1-23
1.2.8.5 Signal Flow 1-24
1.2.8.6 Wiring Diagram 1-27
1.2.8.7 Box 1 - Power 1-27
1.2.8.8 Box 2 - Signal, Standard Homogenizer 1-29
1.2.8.9 Piping and Instrumentation Diagram 1-31
1.2.8.10 Start - Running Sequence Schedule 1-32

1.3 Installation Instructions 1-34
1.3.1 Requirements on Personnel 1-34
1.3.2 Storage 1-34
1.3.3 Unloading and Transportation 1-35
1.3.4 Unpacking and Inspection 1-35
1.3.5 Positioning and Erection 1-36
1.3.5.1 Level the Machine 1-37
1.3.6 Pulsation Dampers 1-38
1.3.6.1 Put Oil in the Crankcase 1-38
1.3.6.2 Connect 1-39

1.4 Lubrication 1-40
1.4.1 Recommended Oil 1-40
1.4.1.1 Oil Amount 1-43

1.5 Check After Installation 1-44
1.5.1 Safety 1-44

This page intentionally left blank

1.1 Introduction

1.1.1 Prior to Operation

Prepare the site according to the information given in 1.2 Preparatory Work on page 1-6 and **Technical data** in chapter 5 Technical Documents.

When installing the machine, follow the instructions in 1.3 Installation Instructions on page 1-34.

Before starting up, make the checks according to 1.5 Check After Installation on page 1-44.

1.1.2 Technical Data

Some pages refer to the following machine unique information:

- Mass
- Piston diameter
- Consumption data

This information is found in **Technical data** in chapter 5 Technical Documents.

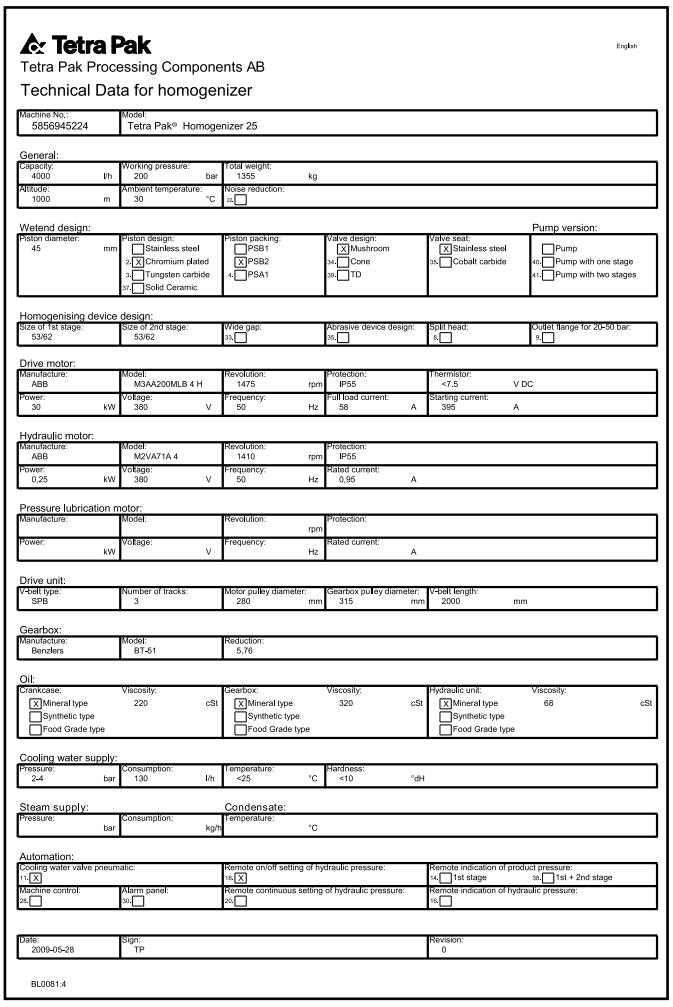

Tetra Pak

English

Tetra Pak Processing Components AB

Technical Data for homogenizer

Machine No.:	Model:
5856945224	Tetra Pak® Homogenizer 25

General:

Capacity:	Working pressure:	Total weight:
4000 l/h	200 bar	1335 kg
Altitude:	**Ambient temperature:**	**Noise reduction:**
1000 m	30 °C	25 ☐

Wetend design: **Pump version:**

Piston diameter:	Piston design:	Piston packing:	Valve design:	Valve seat:	Pump version:
45 mm	☐ Stainless steel	☐ PSB1	☒ Mushroom	☒ Stainless steel	☐ Pump
	2 ☒ Chromium plated	☒ PSB2	34 ☐ Cone	35 ☐ Cobalt carbide	40 ☐ Pump with one stage
	3 ☐ Tungsten carbide	4 ☐ PSA1	39 ☐ TD		41 ☐ Pump with two stages
	37 ☐ Solid Ceramic				

Homogenising device design:

Size of 1st stage:	Size of 2nd stage:	Wide gap:	Abrasive device design:	Split head:	Outlet flange for 20-50 bar:
53/62	53/62	33 ☐	36 ☐	8 ☐	9 ☐

Drive motor:

Manufacture:	Model:	Revolution:	Protection:	Thermistor:
ABB	M3AA200MLB 4 H	1475 rpm	IP55	<7.5 V DC
Power:	**Voltage:**	**Frequency:**	**Full load current:**	**Starting current:**
30 kW	380 V	50 Hz	58 A	395 A

Hydraulic motor:

Manufacture:	Model:	Revolution:	Protection:
ABB	MZVA71A 4	1410 rpm	IP55
Power:	**Voltage:**	**Frequency:**	**Rated current:**
0,25 kW	380 V	50 Hz	0,95 A

Pressure lubrication motor:

Manufacture:	Model:	Revolution:	Protection:
		rpm	
Power:	**Voltage:**	**Frequency:**	**Rated current:**
kW	V	Hz	A

Drive unit:

V-belt type:	Number of tracks:	Motor pulley diameter:	Gearbox pulley diameter:	V-belt length:
SPB	3	280 mm	315 mm	2000 mm

Gearbox:

Manufacture:	Model:	Reduction:
Benzlers	BT-51	5,76

Oil:

Crankcase:	Viscosity:	Gearbox:	Viscosity:	Hydraulic unit:	Viscosity:
☒ Mineral type	220 cSt	☒ Mineral type	320 cSt	☒ Mineral type	68 cSt
☐ Synthetic type		☐ Synthetic type		☐ Synthetic type	
☐ Food Grade type		☐ Food Grade type		☐ Food Grade type	

Cooling water supply:

Pressure:	Consumption:	Temperature:	Hardness:
2-4 bar	130 l/h	<25 °C	<10 °dH

Steam supply: **Condensate:**

Pressure:	Consumption:	Temperature:
bar	kg/h	°C

Automation:

Cooling water valve pneumatic:	Remote on/off setting of hydraulic pressure:	Remote indication of product pressure:
11 ☒	18 ☒	14 ☐ 1st stage 38 ☐ 1st + 2nd stage
Machine control:	**Alarm panel:**	**Remote continuous setting of hydraulic pressure:**
24 ☐	30 ☐	20 ☐

Date:	Sign:	Revision:
2009-05-28	TP	0

BL0081:4

Example of **Technical data**.

1.2 Preparatory Work

1.2.1 General Dimensions

Measures: mm (inch)

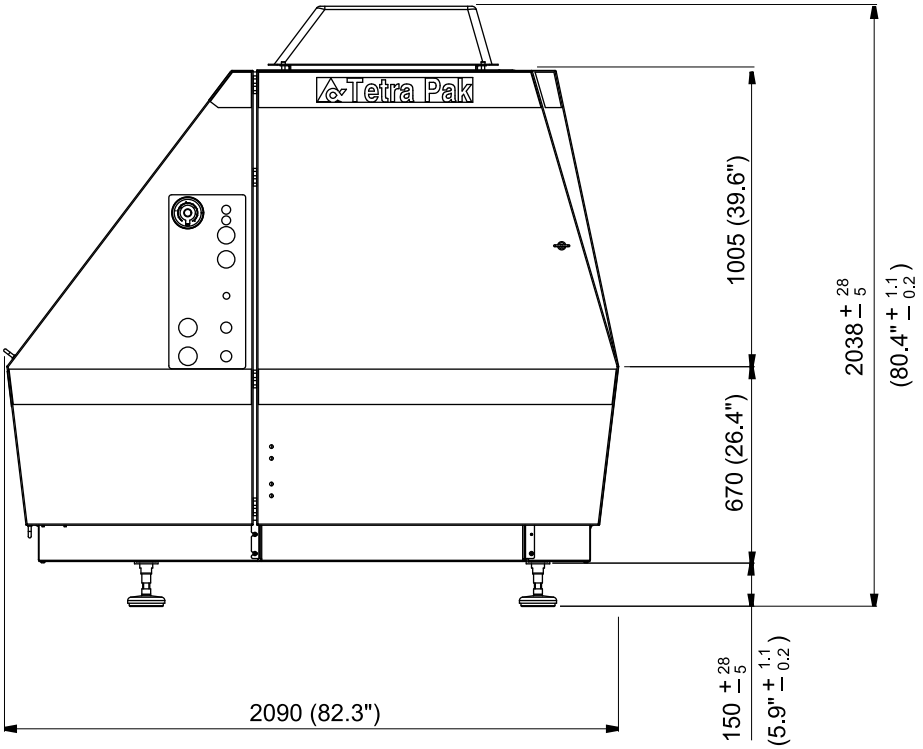

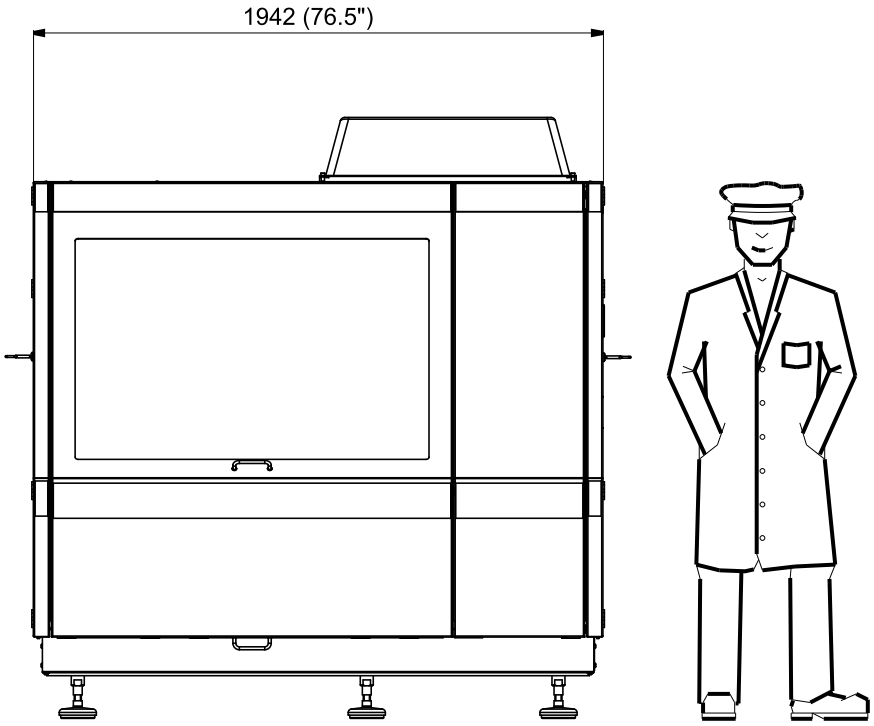

1.2.2 Service Area

Measures: mm (inch)

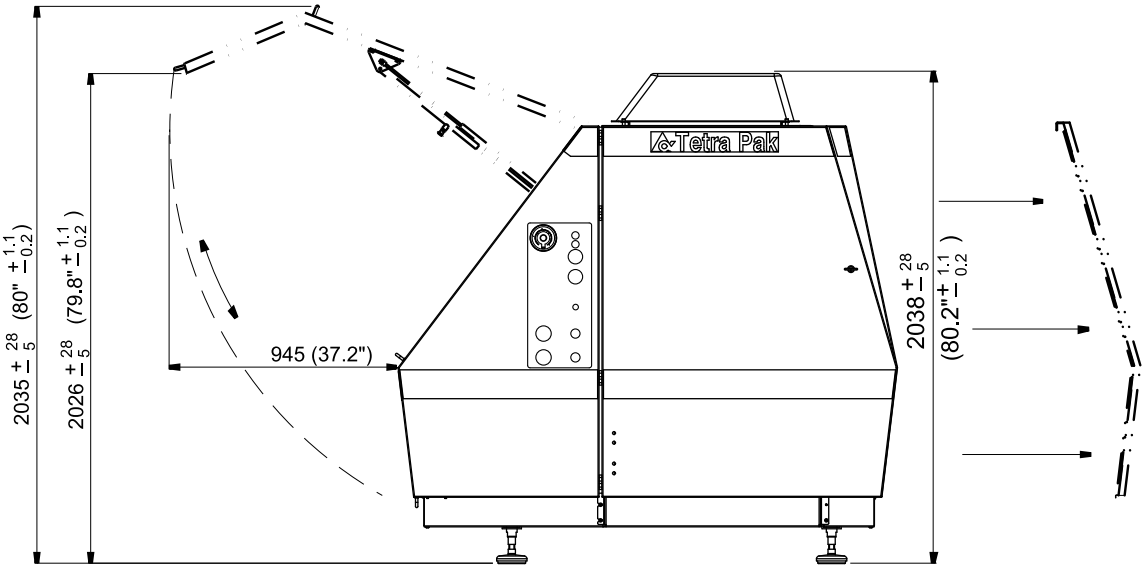

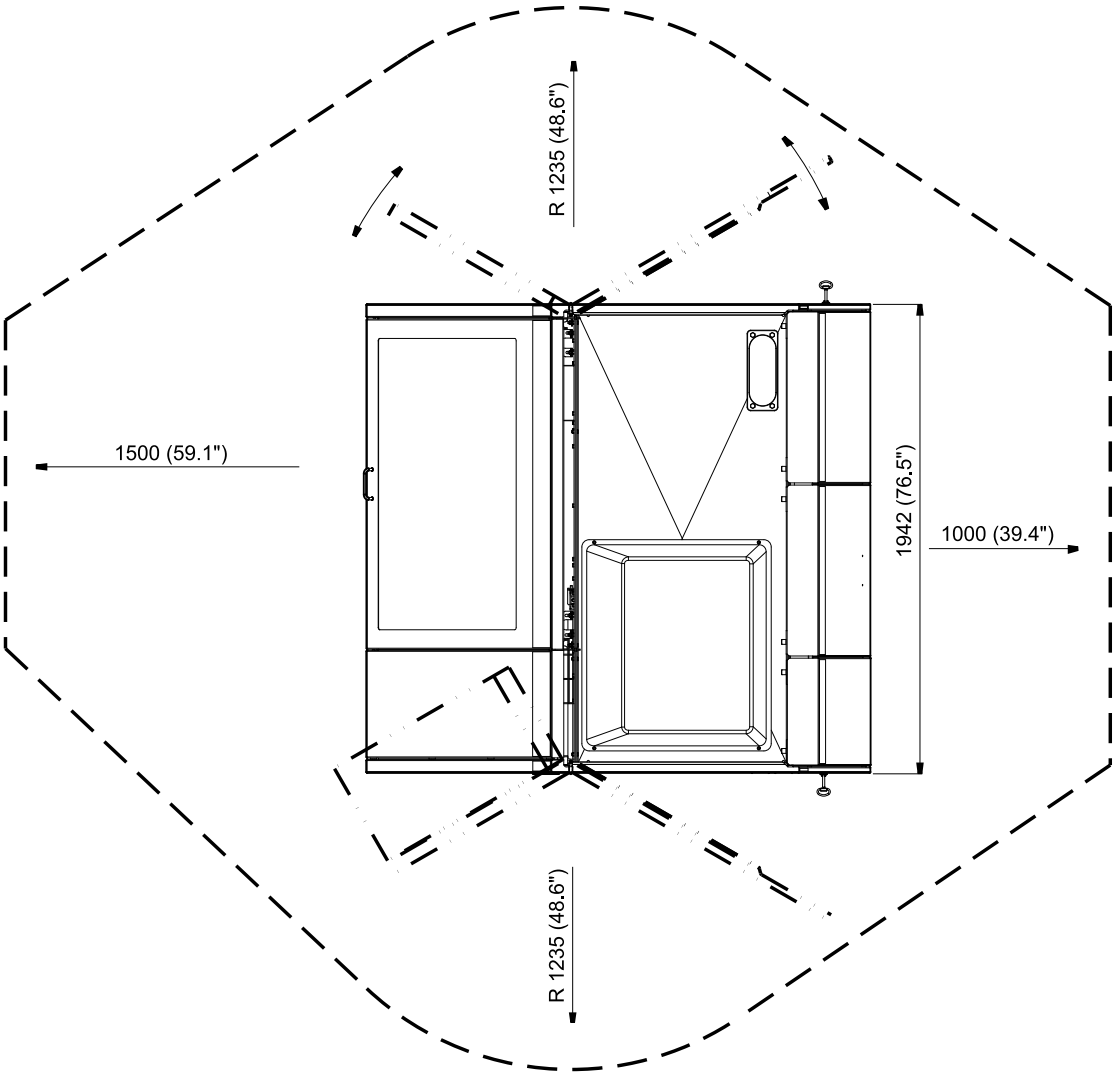

1.2.3 Floor

Weight of machine, see **Technical data** in chapter 5 Technical Documents.

Measures: mm (inch)

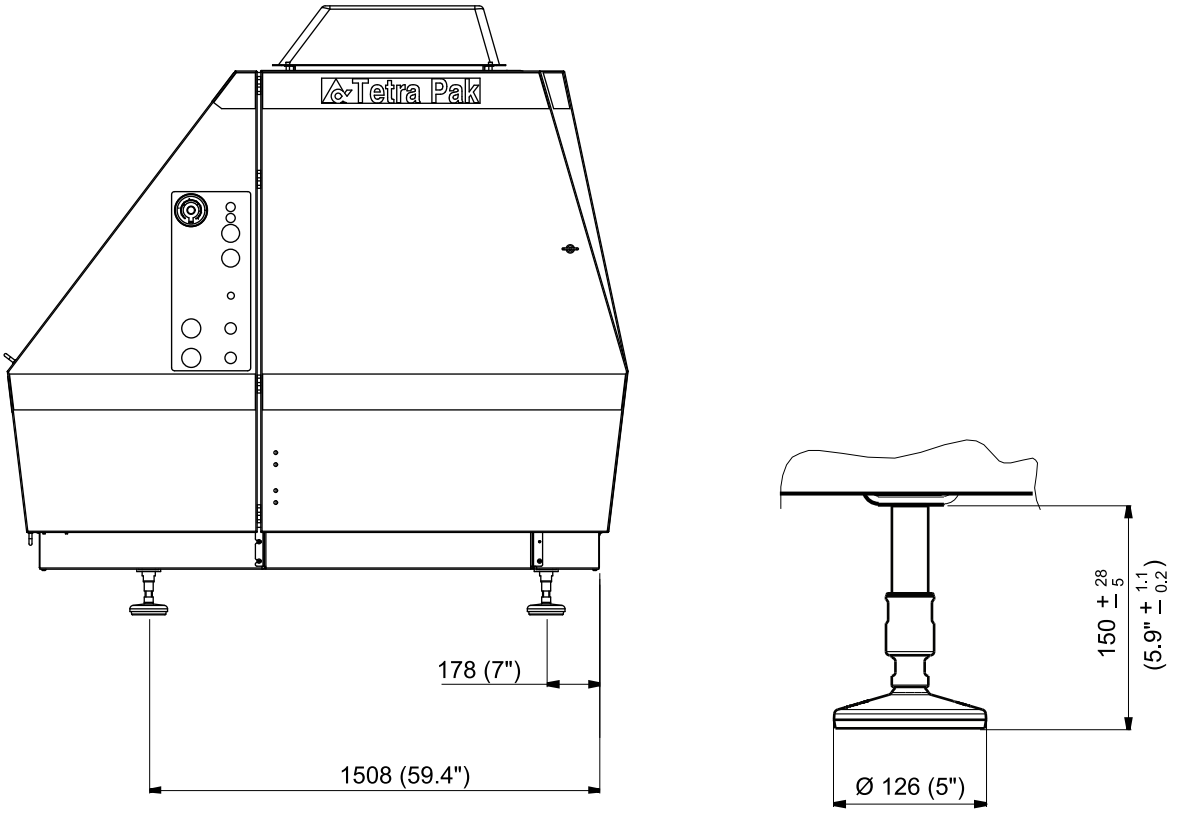

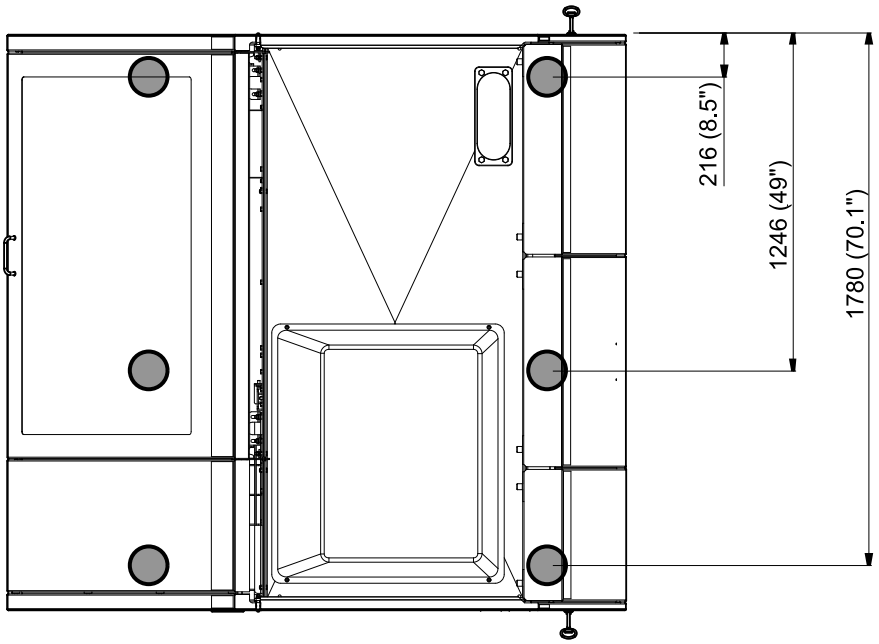

1.2.4 Product Supply

The machine connections have to be welded to the product inlet- / outlet pipes.

The pipe line, inlet and outlet, shall contain as few elbows as possible.

1.2.4.1 Quality of Piping and Welding

Piping: Local regulations as to pressure vessel codes and material quality vs. product properties have to be met.

Welding: Methods according to standards that are acceptable for the transport of liquid food.

A “Testweld” should always be carried out and the sample piece examined by qualified persons and particularly to establish that there are no “pockets”, “cracks”, “pinholes” or “crevices” that could not be thoroughly cleaned under practical conditions.

1.2.4.2 Recommended Inlet Pressures

CAUTION

Risk of machine damage

The machine should never be allowed to run without product. Make sure that the machine is always fed with cleaning solution during CIP.

Product	P1 bar (psi)
Low viscous products e.g. milk, juice	3 - 10 (45 - 150)
High viscous products e.g. sauces, ketchups	4 - 10 (60 - 150)

Outlet pressure P5	3 - 20 bar (45 - 300 psi)

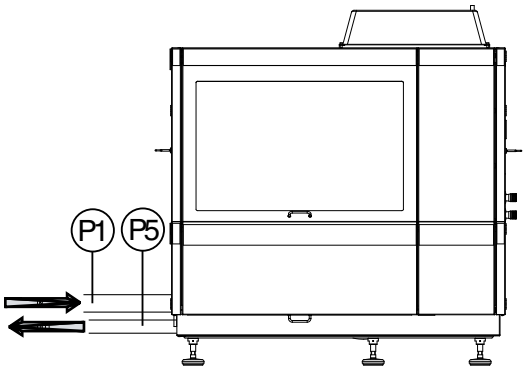

(Cont’d)

(Cont'd)

WARNING

Risk of explosion - Immediate danger to life

Do not install a shut off valve. Make sure that the outlet pipes not are blocked in any way. Due to high pressure, this will make a high risk of exploded pipes and dampers.

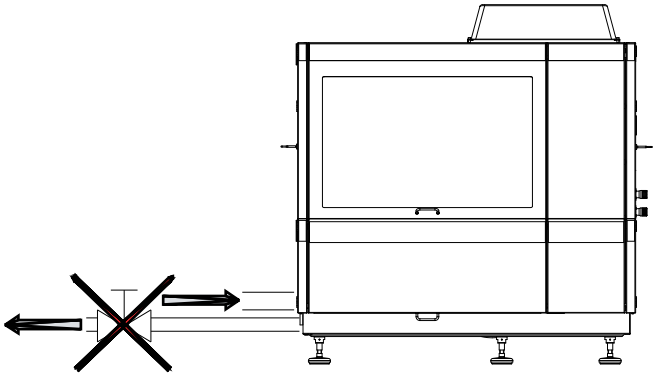

1.2.4.3 Product Inlet - Outlet

1.2.4.3.1 Position

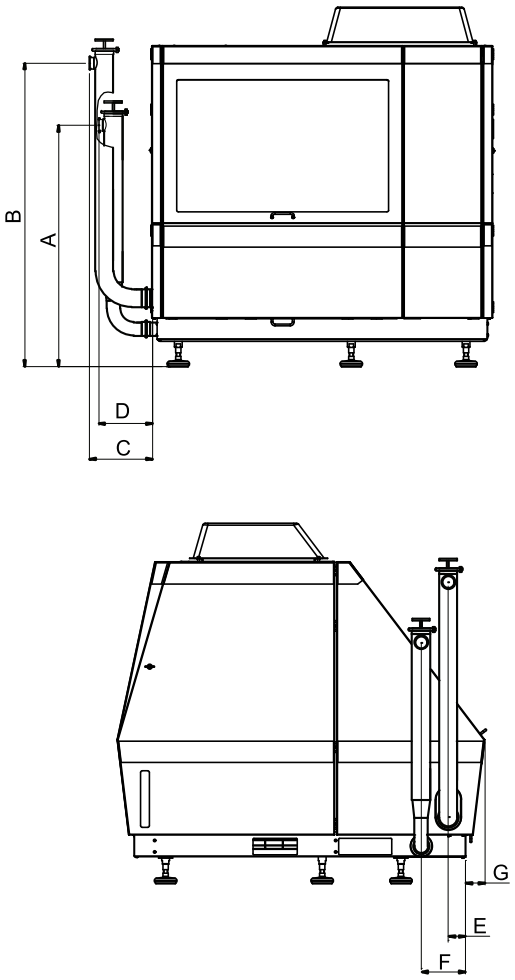

	See Technical data for piston diameter (Ø)			
	(Ø) 56, 63mm		**(Ø) 70, 80, 90 mm**	
	mm	**inch**	**mm**	**inch**
A	1380 ±30	54.3” ±1.2"	1360 ±30	53.5” ±1.2"
B	1540 ±30	60.6” ±1.2"	1715 ±30	67.5” ±1.2"
C	300	11.8”	350	13.8”
D	275	10.8”	300	11.8”
E	95	3.7”	95	3.7”
F	245	9.6”	245	9.6”
G	107	4.2”	107	4.2”

(Cont’d)

(Cont'd)

Product inlet - outlet

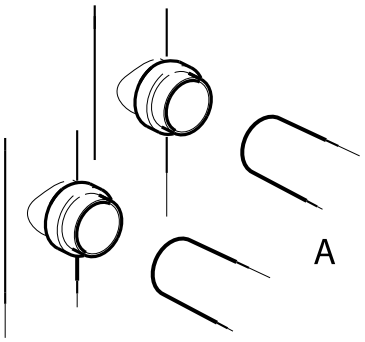

A= Customer piping

		See Technical data for piston diameter (Ø)						
Welding end		**Product inlet**			**Product outlet**		**High pressure outlet (Basic)**	
Piston diameter	**mm**	**(Ø) 45**	**(Ø) 56-63**	**(Ø) 70-90**	**(Ø) 45-63**	**(Ø) 70-90**	**(Ø) 45-63**	**(Ø) 70-90**
Outer diameter	**mm**	63.5	76.2	101.6	63.5	76.2	63.5	76.2
	inch	2.5"	3"	4"	2.5"	3"	2.5"	3"
Material thickness	**mm**	1.8	1.8	2.2	1.8	1.8	1.9	1.9
	inch	0.07"	0.07"	0.09"	0.07"	0.07"	0.08"	0.08"

Pump Outlet

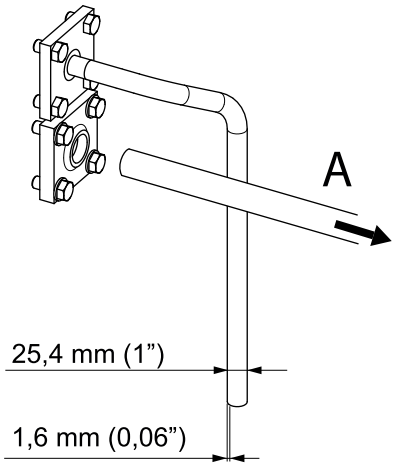

A = Customer piping

See Technical data for piston diameter (Ø)

Welding end		**Pump outlet**	
Piston diameter	**mm**	**(Ø) 45**	**(Ø) 56-63**
D_1	**mm**	25.4	42.8
	inch	1"	1.7"
D_2	**mm**	33.4	60.3
	inch	1.3"	2.4"

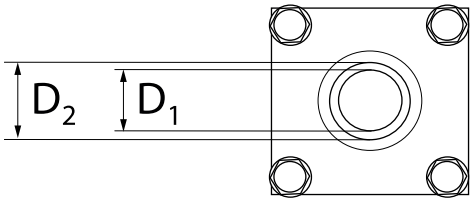

(Cont'd)

(Cont'd)

Split homogenization head

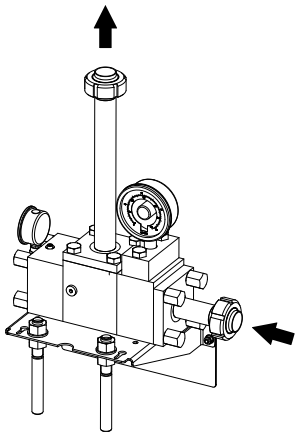

See Technical data for piston diameter (Ø)

Welding end		**Product inlet**	**Product outlet**
Piston diameter	**mm**	**(Ø) 45-90**	**(Ø) 45-90**
Outer diameter	**mm**	63.5	63.5
	inch	2.5"	2.5"
Material thickness	**mm**	1.5	1.5
	inch	0.06"	0.06"

1.2.4.3.2 Guidelines for Connecting Piping

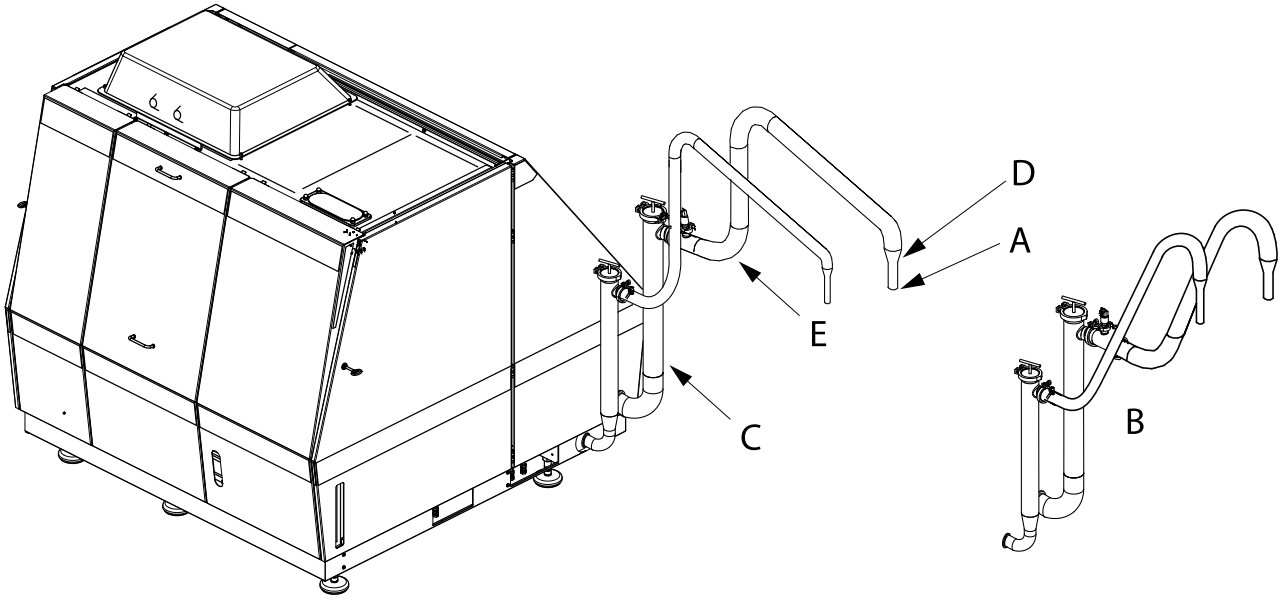

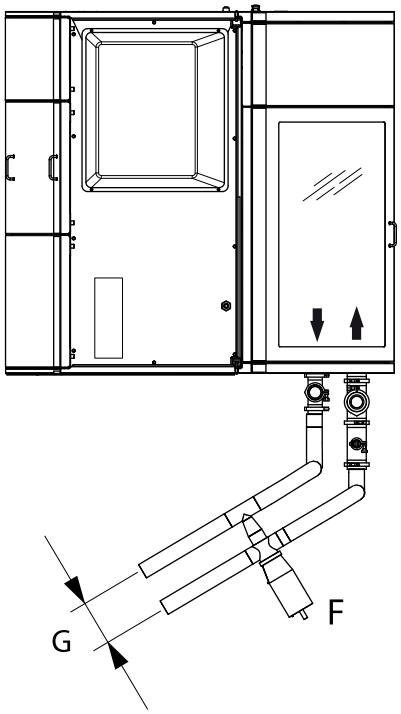

A	Total pipe length from D to machine as short as possible.
B	Angled piping for shorter pipe length can be used.
C	Pulsation dampers as close to machine as possible.
D	Pipe diameter reduction as far from machine as possible, positioned vertically.
E	Pipe radius as big as possible, minimum 1.5 x pipe diameter. As few pipe bends as possible.
F	If valve is open during production, G longer than 10 x pipe diameter. If valve is closed during production, G as short as possible.

1.2.5 Water and Steam Supply

For dimensioning pipes and drainage, see **Technical data** in chapter 5 Technical Documents for consumption.

Requirements on service media, see 1.2.6 Service Media on page 1-16.

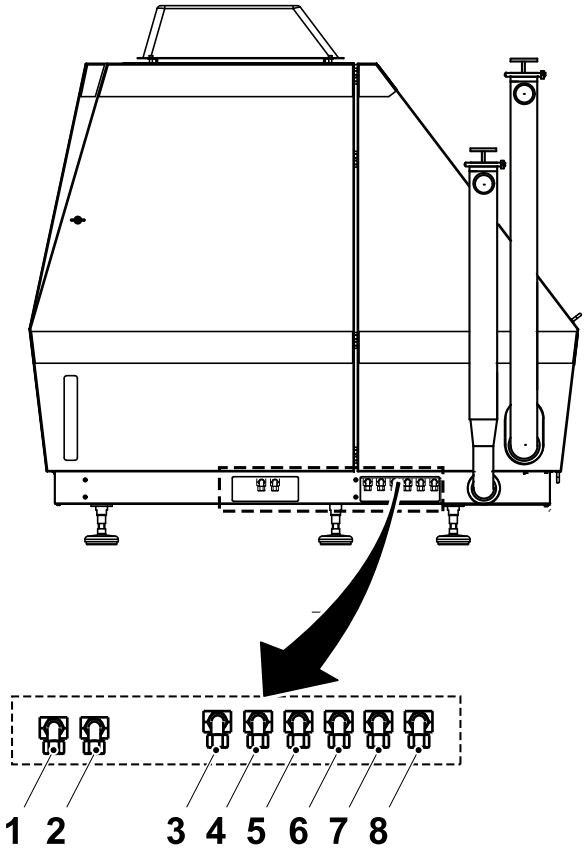

1 Cooling water inlet
2 Steam inlet Ø 15 mm
3 Cooling water outlet - gearbox
4 Cooling water outlet - crank case
5 Condensate outlet - cylinder 4, 5 and homogenization head(s)
6 Condensate outlet - cylinder 1, 2, 3
7 Condenser cooling water outlet - cylinder 4, 5 and homogenization head(s)
8 Condenser cooling water outlet - cylinder 1, 2, 3

Note! Open drainage at outlets 3, 4, 5, 6, 7 and 8.
Connections made to fit 12 mm stainless steel pipe except the steam inlet (2) that is made to fit a 15 mm stainless steel pipe.

1.2.6 Service Media

1.2.6.1 Water

1.2.6.1.1 General Requirements

CAUTION

Noncompliance with these requirements may endanger the equipment.

For consumption and pressure data, see **Technical data** in chapter 5 Technical Documents.

- The supply pressure must be constant.

Water used for cooling, product flushing, rinsing and cleaning should meet the WHO guidelines (stated below) or the European drinking water directive.

Characteristics	
Taste	none
Smell	none
Turbidity	max. 3 NTU
Colour	max. 20 mg/l Pt
Oxygen demand	max. 20 mg/l $KMnO_4$
Tot. dissolved solids	max. 500 mg/l
pH	7 - 8.5
Hardness	<10° dH (max. 180 mg/l $CaCO_3$)
Ammonium	trace amounts
Ammonia	max. 0.5 mg/l NH_4
Iron	none
Manganese	none
Nitrate	max. 30 mg/l NO_3
Sulphate	max. 100 mg/l SO_4
Chlorine (M, S)	max. 0.2 mg/l Cl_2
Chloride (M, S)	max. 30 mg/l Cl^-
Aggressive carbon acid	max. 0 mg/l CO_2
Total amount of bacteria	max. 100/ml
Total amount of 35°C coliform bacteria	max. 1/100 ml
Total amount of 44°C coliform bacteria	0/100 ml
Copper	max. 0.05 mg/l Cu
Zinc	max. 1.0 mg/l Zn

1.2.6.1.2 Water Hardness

If the water is hard (high concentration of Calcium carbonate, $CaCO_3$), the wear and tear of the piston and piston seals will be excessive.

Hardness	<10° dH max 180 mg/l $CaCO_3$

1.2.6.1.3 Corrosion

In order to minimize corrosion:

Chlorine	max. 0.2 mg/l Cl_2
Chloride	max. 30 mg/l Cl^-
pH	7 - 8.5

1.2.6.1.4 Abrasiveness

If the water contains to much of solid particles, the pistons will rapidly wear down.

Turbidity	max. 3 NTU

1.2.6.2 Steam

1.2.6.2.1 General Requirements

CAUTION

Noncompliance with these requirements may endanger the equipment.

For consumption and pressure data, see **Technical data** in chapter 5 Technical Documents.

The steam must be of good quality and free from condensate and air.

Characteristics	
Quality	dry saturated steam
Humidity	max. 5% condensate
pH	8.5 - 9.2
Carbon dioxide	max. 2 ppm
Chloride	max. 8 ppm
Solid particles	none
Turbidity	max. 3 ppm $KMnO_4$

1.2.7 General Cleaning Requirements

WARNING

Chemical hazard

Cleaning solution contains Caustic soda (NaOH) or Nitric acid (HNO_3). These chemicals may cause severe burning to skin and eyes. Use protective clothes, goggles and gloves during handling. If exposed - wash with water for at least 15 minutes. Seek medical assistance. Follow the instructions given by the supplier.

WARNING

Risk of scalds

This machine works under pressurised conditions and high temperatures. To avoid jets of hot liquid, steam or cleaning solution, make sure that any operation sequence is finished, the machine is cooled down and without pressure before disassembling any parts.

1.2.7.1 CIP

When Cleaning In Place observe following recommendations:

- Alkali: NaOH max 2 % at max 85°C (185 °F) (Lye)
- Acid: HNO_3 max 1.5 % at max 85°C (185 °F)
- Inlet pressure > 2 bar (30 psi)

1.2.7.2 Cleaning

- Cleaning program as for the process equipment. The minimal required cleaning flow is 100% of maximal requested production flow.

1.2.7.3 Sterilisation

- Max 140°C (284 °F) at 30 minutes.

1.2.7.4 Pulsation Damper

Check the cleaning of the pulsation damper after cleaning and clean manually if required. The pulsation damper should always be drained after cleaning.

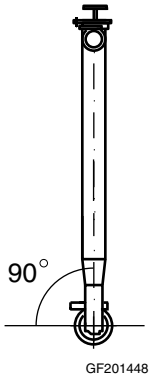

GF201448

1.2.8 Electrical Supply

Power consumption, see **Technical data** in chapter 5 Technical Documents.

WARNING
Electrical hazard
Work to be done by authorized personnel only!

WARNING
Electrical hazard
Before starting the machine, make sure that all cables are undamaged and that the cables are correctly connected.

Note! Make sure to install the homogenizer so that all start and running conditions described in this section are fulfilled!

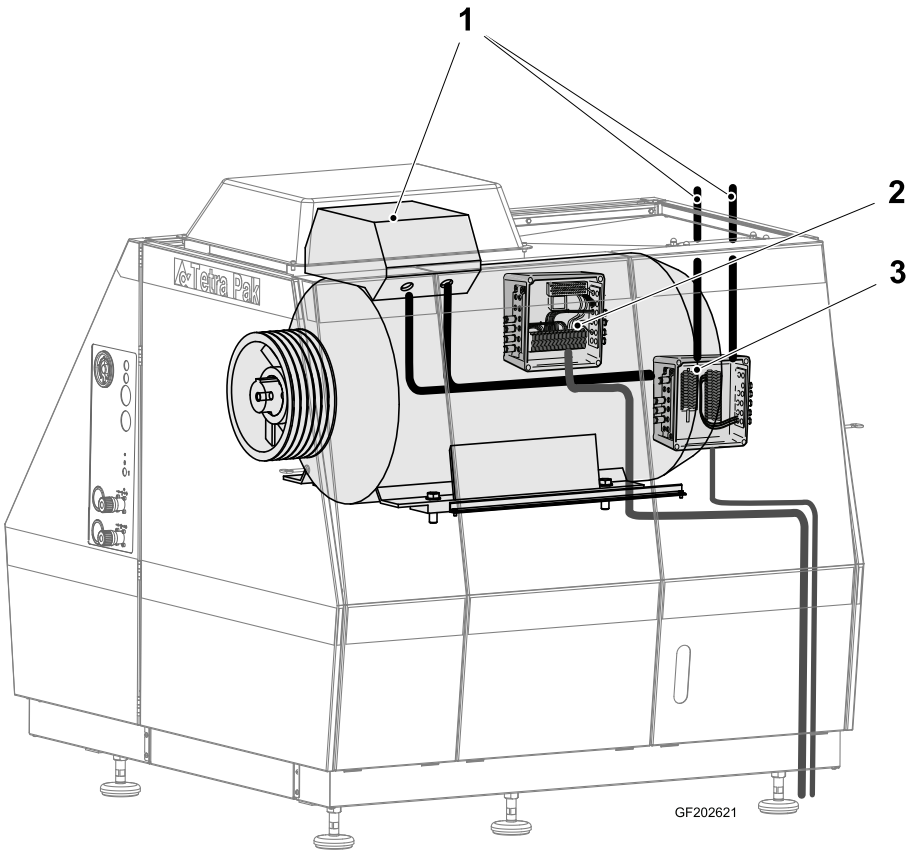

1 Power supply main motor
2 Box 1 - Power
3 Box 2 - Signal

(Cont'd)

(Cont'd)

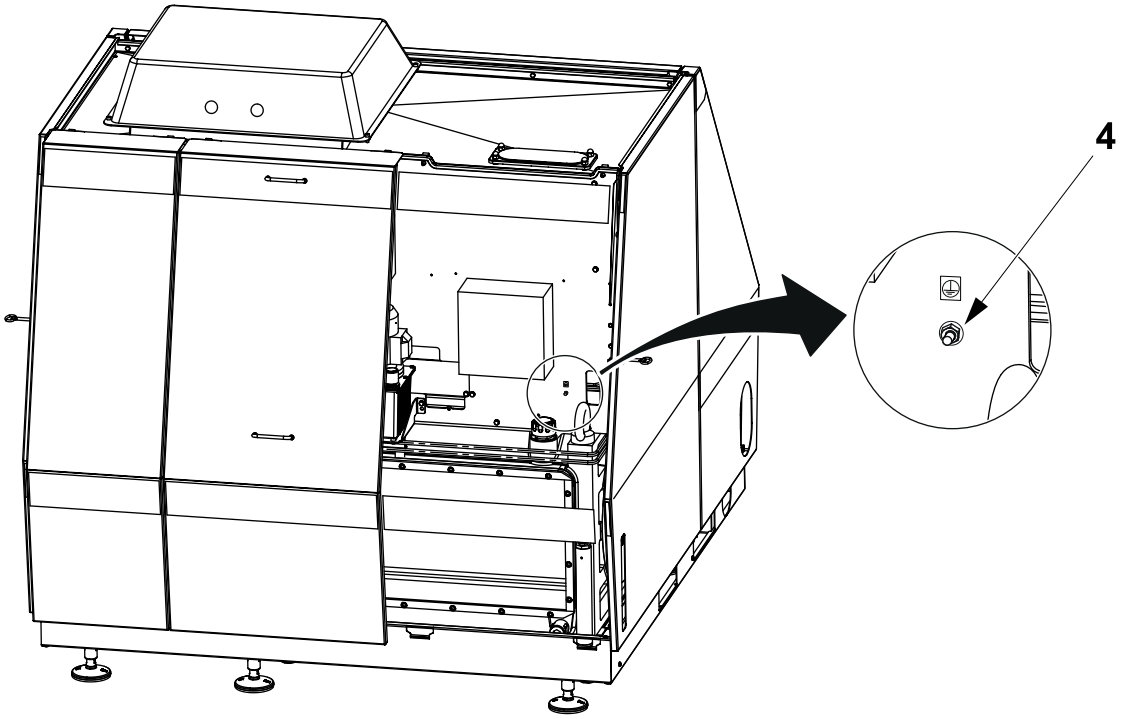

4 Unit grounding point (Connect to an external grounding point)

1.2.8.1 Starter Panel

Connecting the homogenizer to the Tetra Pak starter panel ensures safe start and running conditions. If not using this starter panel, make sure to obtain the conditions described in 1.2.8.4 Starter Panel - Description on page 1-23.

EMC: To limit electromagnetic disturbance, connect a single cable (area 10 mm^2 or bigger) between starter panel and homogenizer grounding points.

Unit Grounding Point	
Starter	
Machine	

1.2.8.2 External Control Panel

An external control panel is needed for:

- Remote control of conditional Start/Stop
- Control of optional equipment
- Alarm monitoring

1.2.8.3 Simplified Overview of Signal Flow

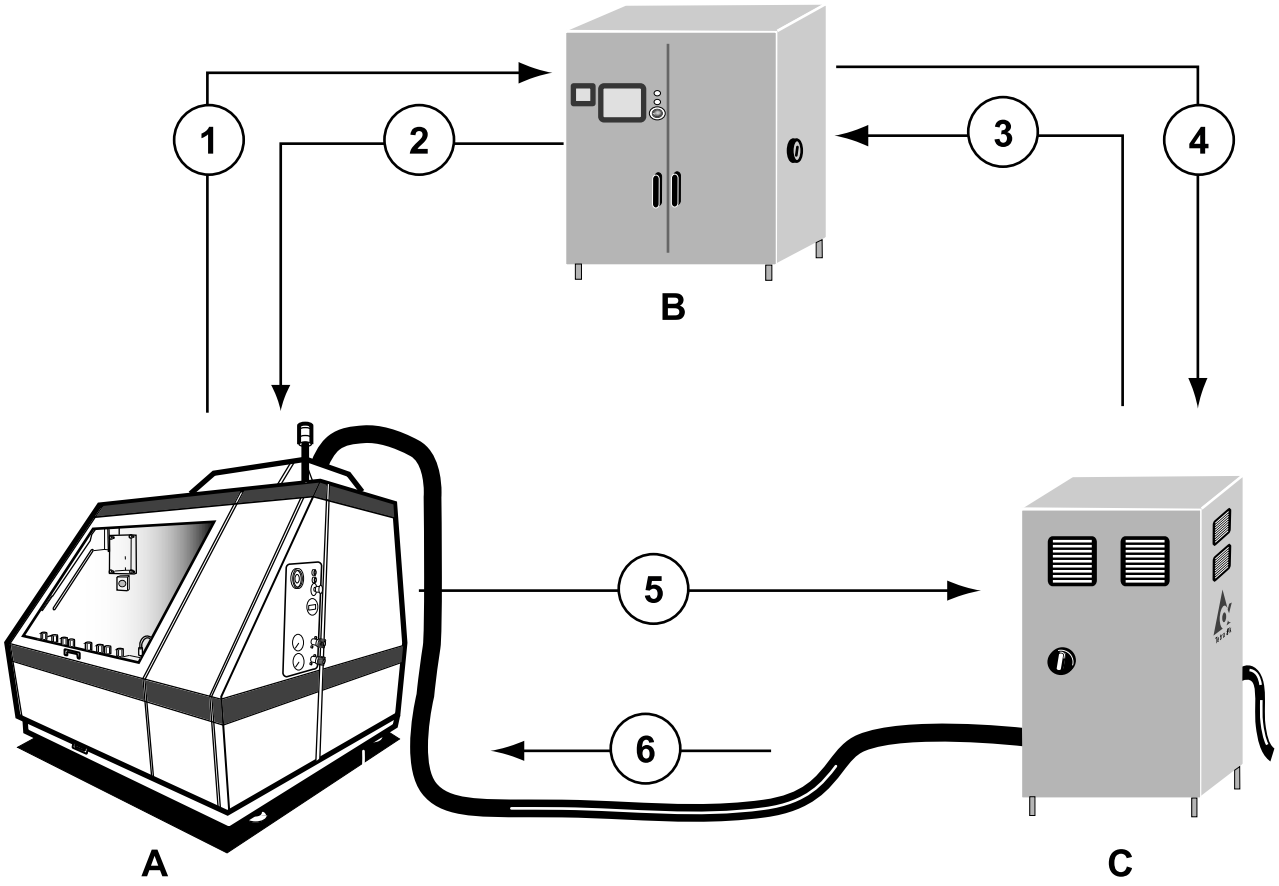

A Homogenizer
B External control panel
C Starter panel

(Cont'd)

(Cont'd)

1. Homogenizer -> External control panel

- Remote indication of product pressure (Option)
- Remote indication of hydraulic pressure, stage 1/stage 2 (Option)
- Steam temperature 1 and 2- Aseptic Pistons & Housings (Option)
- Oil level guard, crankcase - high/low
- Clogged oil filter for crankcase
- Oil temperature, crankcase
- Oil temperature, gearbox
- Flow/Pressure guard, Cooling (Option)
- Change valve stage 2/Split head
- Change valve indication

2. External control panel -> Homogenizer

- Remote on/off setting hydraulic pressure, stage 1/stage 2 (Option)
- Remote on/off setting hydraulic unit 2 (Pump option)
- Remote continuous setting, stage 1/stage 2 (Option)
- High Temperature Condensate 1 & 2 (Option)
- Cooling water circuit - CIP 1 & 2 (Option)
- Steam shut off valve, solenoid (Aseptic)
- Alarm lamp

3. Starter panel -> External control panel

- Feed back; Main motor running
- Feed back; Emergency stop activated

4. External control panel -> Starter panel

- Start/Stop
- Emergency stop
- Speed control (Frequency starter panel required)
- Speed selector (2-speed starter panel required)

(Cont'd)

(Cont'd)

5. Homogenizer -> Starter panel

- Start button (Normally not used)
- Stop button (Normally not used)
- Emergency stop buttons
- Door guard (Switch)
- Low oil pressure, crankcase
- High machine temperature
- Thermistor in main motor

6. Starter panel -> Homogenizer

- Main motor
- Motor, Hydraulic unit 1
- Motor, Hydraulic unit 2 (Pump option)
- Motor, Pressure lubrication
- Door guard (Solenoid)
- Low oil pressure, crankcase
- Cooling water shut off valve, solenoid (Option)
- Light (Fluorescent lamp)
- High machine temperature

1.2.8.4 Starter Panel - Description

The homogenizer and the external control panel are connected to the starter panel. (The homogenizer Start- and Stop buttons are normally not used).

When start signal is given, the starter panel checks certain conditions before the start sequence begins. The starter panel then controls the start sequence described in the Start- Running Sequence Schedule. During operation, certain alarms stop the homogenizer.

For start, stop and running conditions see 1.2.8.10 Start - Running Sequence Schedule on page 1-32.

1.2.8.4.1 Feedback Signals

- Main motor running
- Emergency stop activated

1.2.8.4.2 UPS (Uninterrupted Power Supply)

The starter panels are prepared for UPS as standard.

A short interrupt of power supply will not stop the homogenizer.

1.2.8.5 Signal Flow

1. Homogenizer -> External control panel

M400 - Box 2 (Signal)	Wiring diagram - machine, see page1-29			External Control panel
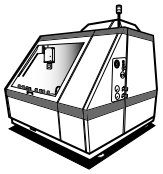	- W27	Remote indication product pressure (option)	——->	
	- W272	Remote indication product pressure (option)	——->	
	- W28	Remote indication hydraulic pressure, Stage1 (option)	——->	
	- W29	Remote indication hydraulic pressure, Stage 2 (option)	——->	
	- W30	Steam temperature 1 (aseptic)	——->	
	- W31	Steam temperature 2 (aseptic)	——->	
	- W35	Oil level guard crankcase, high/low	——->	
	- W37	Clogged filter, crankcase	——->	
	- W41	Oil temperature, crankcase	——->	
	- W42	Oil temperature, gearbox	——->	
	- W46	Flow/Pressure guard, Cooling (option)	——->	
	- W47	Inlet/Pressure guard (option)	——->	
	- W39	Low oil pressure, Crankcase	——->	
	- W43	High machine temperature	——->	
	- W61	Change over valve (OR)	——->	
	- W63	Indication change over valve (OR)	——->	

2. External control panel -> Homogenizer

External Control panel	Wiring diagram - machine, see page1-29			M400 - Box 2 (Signal)
	Steam, solenoid (aseptic)	——->	- W11	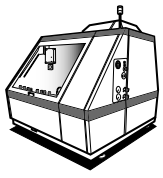
	High Temperature Condensate 1 (option)	——->	- W16	
	High Temperature Condensate 2 (option)	——->	- W17	
	Remote on/off setting hydraulic unit 2 (Pump option)	——->	- W19	
	Cooling Water Circuit - CIP 1 (option)	——->	- W20	
	Cooling Water Circuit - CIP 2 (option)	——->	- W21	
	Remote on/off setting hydraulic pressure, Stage 1 (option)	——->	- W22	
	Remote on/off setting hydraulic pressure, Stage 2 (option)	——->	- W23	
	Remote continuous setting, Stage 1 (option)	——->	- W24	
	Remote continuous setting, Stage 2 (option)	——->	- W25	
	Alarm lamp	——->	- W55	

(Cont'd)

(Cont'd)

3. Starter panel -> External control panel

Starter panel	See Electrical Manual (EM)		External Control panel
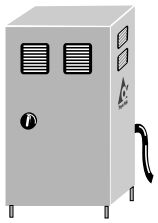	Feed back; Main motor running Feed back; Emergency stop activated (if used)	——-> ——->	

4. External control panel -> Starter panel

External Control panel	See Electrical Manual (EM)		Starter panel
	Start/Stop (if used) Emergency stop (if used) Speed control (Frequency starter panel required) Speed selector (2-speed starter panel required)	——-> ——-> ——-> ——->	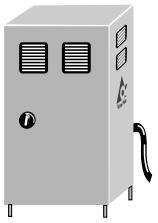

5. Homogenizer -> Starter panel

M400 - Box 1 (Power)	Wiring diagram - machine, see page 1-27 See Electrical Manual (EM)			Starter panel
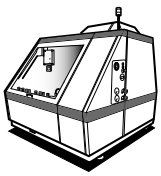	- W05 - W05 - W05 - W06 - W08 - W14 - W15 - W18	Start Stop Emergency stop 1 Emergency stop 2 Door guard (Switch) Low oil pressure, crankcase High machine temperature Thermistor in main motor	——-> ——-> ——-> ——-> ——-> ——-> ——-> ——->	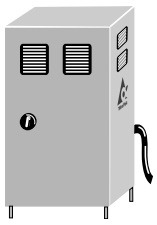

(Cont'd)

(Cont'd)

6. Starter panel-> Homogenizer

Starter panel	Wiring diagram - machine, see page 1-27 See Electrical Manual (EM)			M400 - Box 1 (Power)
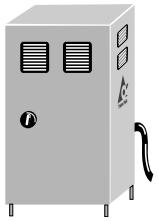	Motor, hydraulic unit 1	——->	- W02	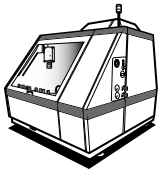
	Motor, pressure lubrication	——->	- W03	
	Motor, hydraulic unit 2 (Pump option)	——->	- W04	
	Door guard (solenoid)	——->	- W09	
	Cooling water (option)	——->	- W10	
	Light (Fluorescent lamp)	——->	- W12	
	Low oil pressure, crankcase	——->	- W39	
	High machine temperature	——->	- W43	

Main motor - W01

1.2.8.6 Wiring Diagram

1.2.8.7 Box 1 - Power

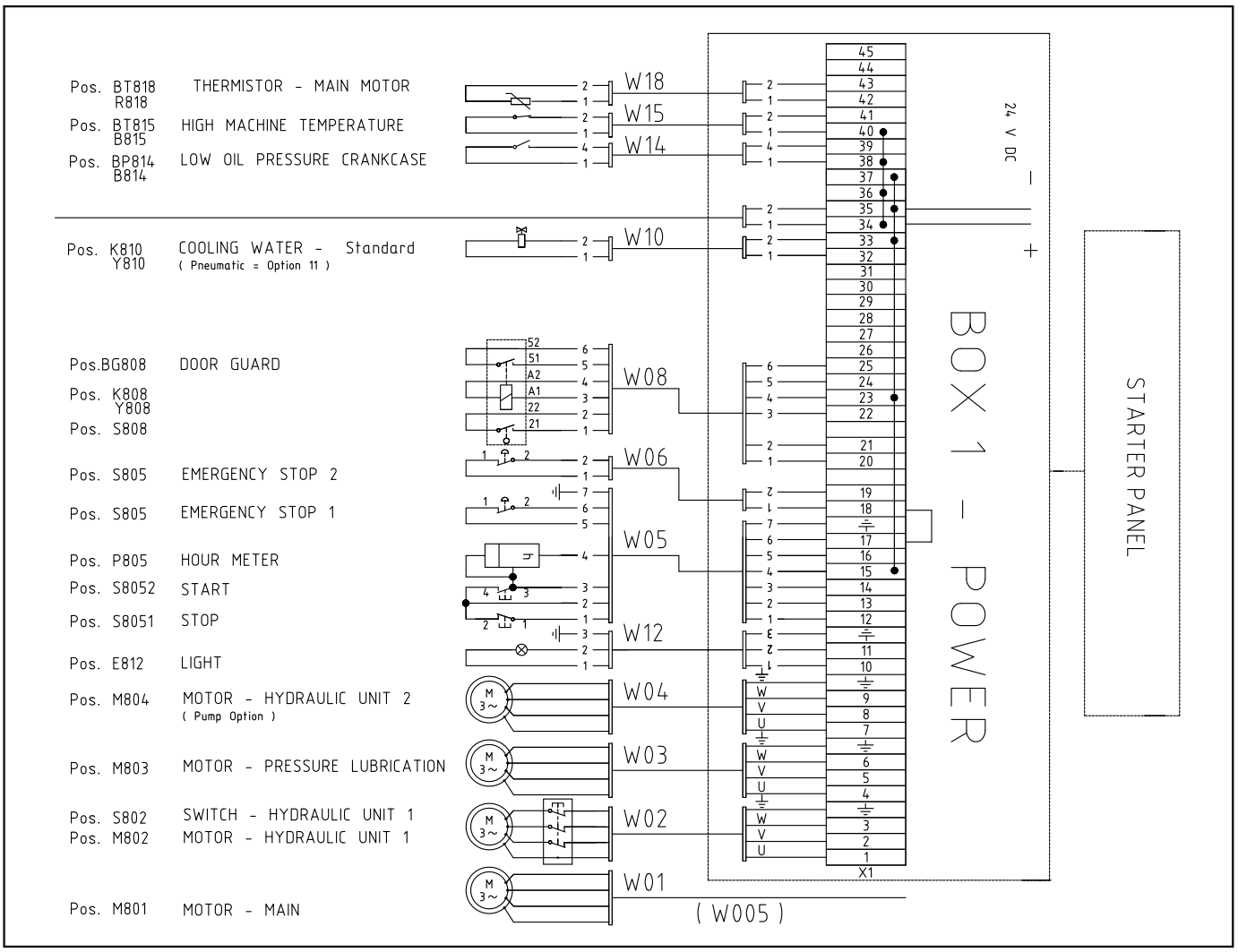

W01	M801	Motor - Main
W02	M802 S802	Motor - Hydraulic Unit 1 Switch - Hydraulic Unit 1
W03	M803	Motor - Pressure lubrication
W04	M804	Motor - Hydraulic Unit 2 (Option 40, 41, Pump)
W05	S8051 S8052 P805 S805	Stop Start Hour meter Emergency Stop 1
W06	S806	Emergency Stop 2
W08	BG808 K808 (Y808) S808	Door guard
W10	K810 (Y810)	Cooling Water - Standard (Pneumatic = Option 11)

(Cont'd)

(Cont'd)

W12	E812	Light
W14	BP814 (B814)	Low Oil Pressure - Crankcase
W15	BT815 (B815)	High Machine Temperature
W18	BT818 (R818)	Thermistor in Main Motor

1.2.8.8 Box 2 - Signal, Standard Homogenizer

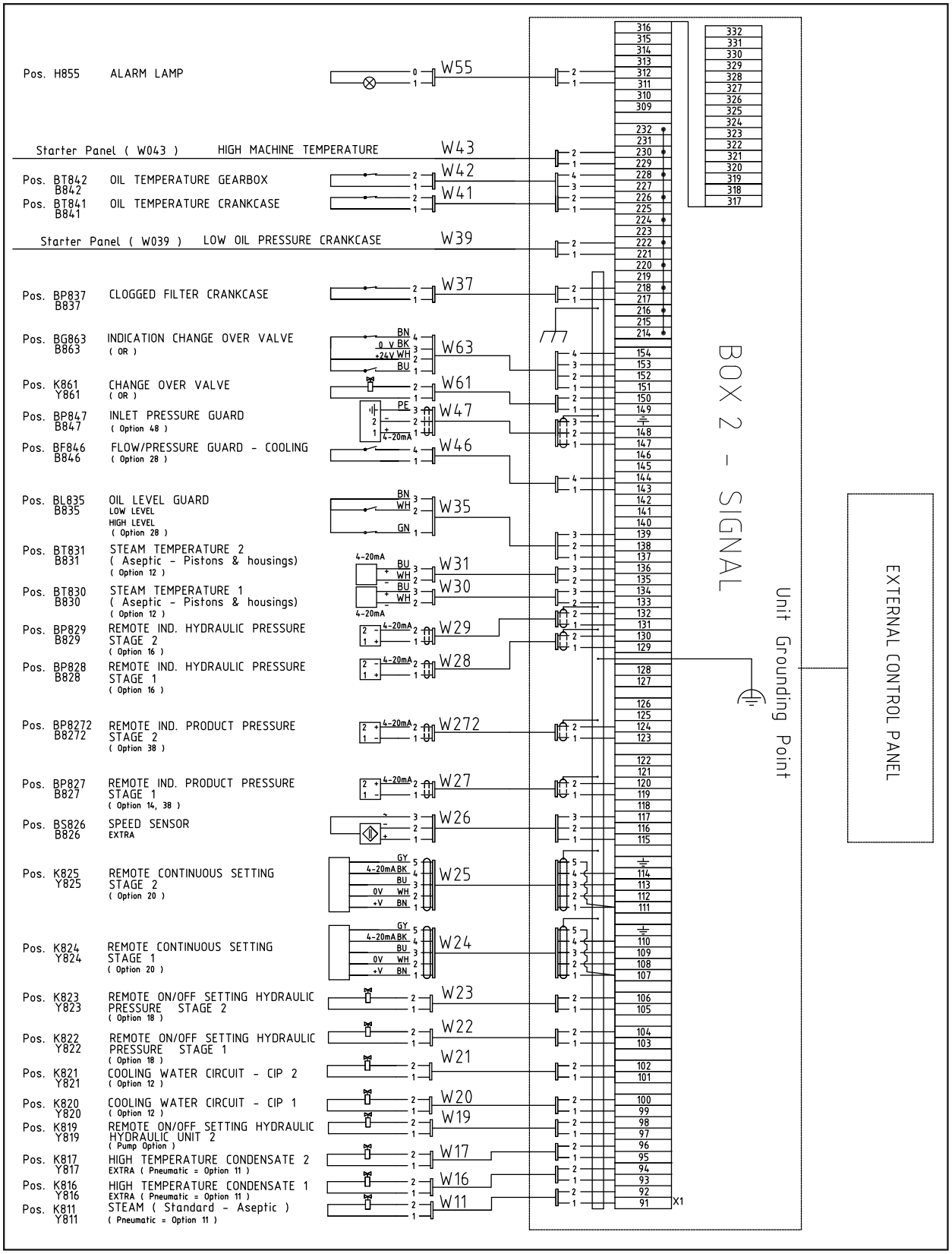

(Cont'd)

(Cont'd)

W11	K811 (Y811)	Steam - Standard Aseptic (Pneumatic = Option 11)
W16	K816 (Y816)	High Temperature Condensate 1 Extra (Pneumatic = option 11)
W17	K817 (Y817)	High Temperature Condensate 2 Extra (Pneumatic = option 11)
W19	K819 (Y819)	Remote On/Off Setting Hydraulic Unit 2 (Option 40, 41, Pump)
W20	K820 (Y820)	Cooling Water Circuit - CIP 1 (Option 12)
W21	K821 (Y821)	Cooling Water Circuit - CIP 2 (Option 12)
W22	K822 (Y822)	Remote On/Off Setting Hydraulic Pressure Stage 1 (Option 18)
W23	K823 (Y823)	Remote On/Off Setting Hydraulic Pressure Stage 2 (Option 18)
W24	K824 (Y824)	Remote Continuous Setting Stage 1 (Option 20)
W25	K825 (Y825)	Remote Continuous Setting Stage 2 (Option 20)
W26	BS826 (B826)	Speed Sensor Extra
W27	BP827 (B827)	Remote Ind. Product Pressure Stage 1 (Option 14, 38)
W272	BP8272 (B8272)	Remote Ind. Product Pressure Stage 2 (Option 38)
W28	BP828 (B828)	Remote Ind. Hydraulic Pressure Stage 1 (Option 16)
W29	BP829 (B829)	Remote Ind. Hydraulic Pressure Stage 2 (Option 16)
W30	BT830 (B830)	Steam Temperature 1 (Aseptic, Pistons & Housings - Option 12)
W31	BT831 (B831)	Steam Temperature 2 (Aseptic, Pistons & Housings - Option 12)
W35	BL835 (B835)	Oil Level Guard - High Level Oil Level Guard - Low Level (Option 28)
W46	BF846 (B846)	Flow/Pressure Guard - Cooling (Option 28)
W47	BP847 (B847)	Inlet Pressure Guard (Option 48)
W61	K861 (Y861)	Change Over Valve (OR)
W63	BG863 (Y863)	Indication Change Over Valve (OR)
W37	BP837 (B837)	Clogged Filter - Crankcase
W39	Starter Panel	Low Oil Pressure - Crankcase
W41	BT841 (B841)	Oil Temperature - Crankcase
W42	BT842 (B842)	Oil Temperature - Gearbox
W43	Starter Panel	High Machine Temperature
W55	H855	Alarm Lamp

1.2.8.9 Piping and Instrumentation Diagram

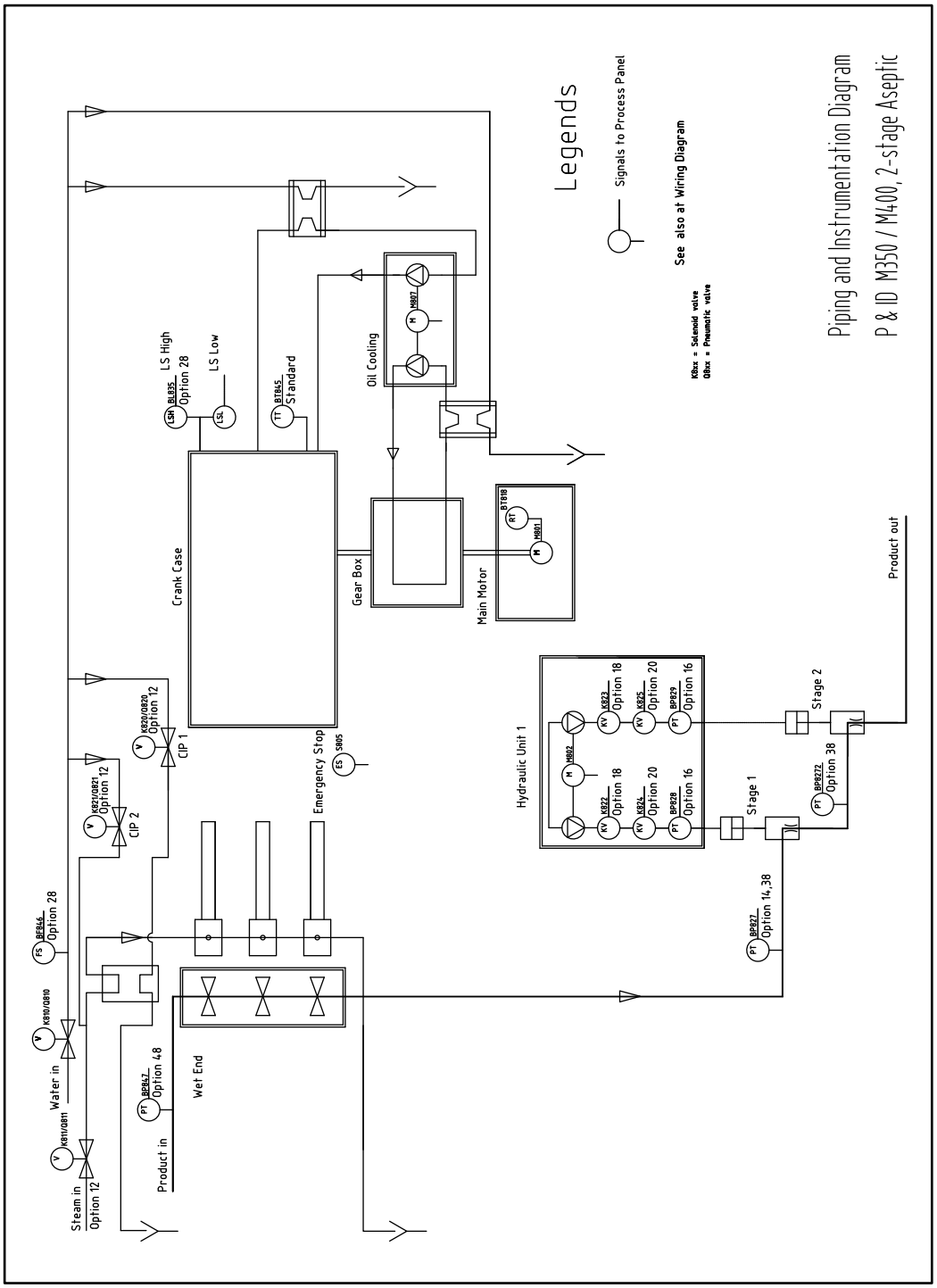

1.2.8.10 Start - Running Sequence Schedule

Tetra Pak Homogenizer 350/400								Version:AL	Date:2016-02-15		Option			Actual
Start Sequence	**Signal**	**Effect**	**New Item**	**Old Item**	**Start**				**Note**					**Machine**
			See Wiring Diagram	**See Wiring Diagram**							**See Technical Data**			
Start motor Hydraulic unit 2 (LPRV always unit 2)*		0,25 kW	M804	M804	x				Start before main motor		pump,40,41	SP	PP	
Hydraulic remote on/off	24v	18 W	K819	Y819	x				LPRV close before start of main motor.		pump,40,41		PP	
Feedpump									Start Feedpump				PP	
Start Pressure lubrication pump		2,2 kW	M803	M803	x							SP		
Door guard 1	24v		S808, K808, BG808	S808, Y809, S809	x							SP		
Door guard 2	24v		BG809	B809	x				Safety sensor, ADAM M12, 20-051-00 connected to Vital 1 (ABB)		OR	SP		
Oil Pressure OK	NC		BP814	B814					no signal			SP		
Main motor temp OK	NC		R818	R818					Thermistor			SP		
Machine temp OK	NC		BT815	B815					no signal			SP		
Emergency stop check			S805,S806	S805,S806								SP		
Stop, start button check			S8051,S8052	S8051,S8052					Not used for remote start			SP		
Start Main motor			M801	M801	x							SP		
Open cooling water valve	24v	11 W	K810	Y810	x							SP		
Open cooling water valve	24v	11 W	Q810	F810 (V55)	x				Air supply from process panel		11		PP	
Open Steam valve	NC		BP814	B814	x				24V supply from process panel		12		PP	
Open Steam valve	24v	8 W	K811	Y811	x				24V supply from process panel		12		PP	
Start hydraulic pump 1, delay 30s			Q811	F811 (V48)	x				Air supply from process panel		11, 12		PP	
			M802,S802	M802,S802	x				Delay 30s after start main motor			SP		
Operation Sequence Valves and PT-100	**Signal**		**New Item**	**Old Item**	**Start**	**Steril.**	**Prod./AIC**	**Cleaning**	**Note**		**Option**			
High Temperature Condensate 1	24 V		K816	Y816	x		x	x	High Temperature Sterilisation, supply from process panel	24V	OR		PP	
High Temperature Condensate 1			Q816	F816	x		x	x	High Temperature Sterilisation, supply from process panel	Air	OR		PP	
High Temperature Condensate 2	24 V		K817	Y817	x		x	x	High Temperature Sterilisation, supply from process panel	24V	OR		PP	
High Temperature Condensate 2			Q817	F817	x		x	x	High Temperature Sterilisation, supply from process panel	Air	OR		PP	
Hydraulic remote on/off			K819	Y819	x	x	x	(x)	Flip during CIP to clean LPRV outlet		pump,40,41		PP	
Door guard 1			S808, K808, BG808	S808, Y809, S809	x	x	x	x				SP		
Door guard 2	24v		BG809	B809	x	x	x	x	Safety sensor, ADAM M12, 20-051-00 connected to Vital 1 (ABB)		OR	SP		
Steam valve	24v		K811	Y811/ V48	x	x	x		24V supply from process panel		12		PP	
Steam valve			Q811	F811/ V48	x	x	x		Air supply from process panel		11, 12		PP	
CIP valve 1	24V	11W	K820	Y820	x	x	x		24V supply from process panel		12		PP	
CIP valve 1			Q820	F820	x	x	x		Air supply from process panel		11, 12		PP	
CIP valve 2	24V	8W	K821	Y821		x		x	24V supply from process panel		12		PP	
CIP valve 2			Q821	F821				x	Air supply from process panel		11, 12		PP	
Remote continuous setting stage 1	4-20mA	2,5 A	K824	Y824			x				20		PP	
Remote continuous setting stage 2	4-20mA	2,5 A	K825	Y825			x				20		PP	
Hydraulic remote on/off stage 1	24 V	18 W	K822	Y822			x				18		PP	
Hydraulic remote on/off stage 2	24 V	18 W	K823	Y823			x				18		PP	
Steam temp, PT 100 0 - 160° C	4-20mA		BT830	B830	N/A	110 °C	110 °C	N/A	110C standard regulating valve 0,35bar		12		PP	
Steam temp, PT 100 0 - 160° C	4-20mA		BT831	B831	N/A	110 °C	110 °C	N/A	110C standard regulating valve 0,35bar		12		PP	
Steam temp, PT 100 0 - 160° C	4-20mA		BT830	B830	N/A	125 °C	110 °C	N/A	High Temperature Sterilisation		OR		PP	
Steam temp, PT 100 0 - 160° C	4-20mA		BT831	B831	N/A	125 °C	110 °C	N/A	High Temperature Sterilisation		OR		PP	
Remote Signals	**Signal**		**New Item**	**Old Item**	**Start**	**Steril.**	**Prod./AIC**	**Cleaning**	**Note**		**Option**			
Remote indication product pressure	4-20mA		BP827	B827	x	x	x	x			14 ,38		PP	
Remote indication second stage pressure	4-20mA		BP8272	B8272	x	x	x	x			38		PP	
Remote indication hyd-pressure 1 stage	4-20mA		BP828	B828	x	x	x	x			16		PP	
Remote indication hyd-pressure 2 stage	4-20mA		BP829	B829	x	x	x	x			16		PP	

(Cont'd)

(Cont'd)

Monitoring Signals - Alarm	Signal		New Item	Old Item	Start	Steril.	Prod./ATC	Cleaning	Note	Option			
Reset Alarm									Reset Alarm			PP	
Alarm Lamp	24 V	90 mA	H855	H855					Deactivate/activate Alarm Lamp			PP	
Low Oil Pressure	NC		BP814	B814					Alarm signal stop machine. Normal stop		SP	PP	
High machine temp	NC		BT815	B815					Alarm signal ,stop machine after 20 minutes		SP	PP	
Low inlet pressure (less than 2 bar)	4-20mA		BP847	B847					Alarm signal (after 20s release homogenising pressure. Reactivate when pressure is recovered.) Larm at 2 bar, stop at 1 bar. Set in PP.	48		PP	
High oil level crankcase	NC		BL835	B835					Indication. Stop after max 20 min. Timer in PP			PP	
Low oil level crankcase	NC		BL835	B835					Indication. Stop after max 20 min. Timer in PP			PP	
Clogged oil filter	NC		BP837	B837					Indication. Stop after max 24 h. Timer in PP			PP	
High oil temp crankcase	NC		BT841	B841					Indication. Stop after max 20 min. Timer in PP			PP	
High oil temp gearbox	NC		BT842	B842					Indication. Stop after max 20 min. Timer in PP			PP	
Low cooling water flow	NC		BF846	B846					Indication. Stop after max 5 min. Timer in PP	28		PP	
Normal Stop Sequence	**Signal**		**New Item**	**Old Item**					**Note**	**Option**			
Release homogenizing pressure stage 1	4-20mA		K824	Y824						20		PP	
Release homogenizing pressure stage 2	4-20mA		K825	Y825						20		PP	
Release homogenizing pressure stage 1	24 V		K822	Y822						18		PP	
Release homogenizing pressure stage 2	24 V		K823	Y823						18		PP	
Stop hydraulic motor unit 1			M802,S802	M802,S802					S802 not valid for option 17,18,20		SP		
Stop main motor			M801	M801							SP		
Close cooling water valve	24 V		K810	Y810 (V55)					Air supply from process panel	11	SP	PP	
Close cooling water valve	24 V		Q810	F810 (V55)					24V supply from process panel	12		PP	
Close steam valve			K811	Y811 (V48)					Air supply from process panel	11, 12		PP	
Close steam valve			Q811	F811 (V48)					24V supply from process panel				
Stop oil lubrication pump			M803	M803					Delay 120s after main motor stop		SP	PP	
Release Door guard 1	24V		S808, K808, BG808	S808, Y809, S809					Delay 120s after main motor stop	OR	SP	SP	
Release Door guard 2			BG809	B809							SP		
Stop Pressure lubrication pump			M803	M803					Stop Feedpump			PP	
Feedpump									Delay (will drain outlet pipe)	pump,40,41			
Release Hydraulic remote on/off valve	24 V		K819	Y819					Delay (will drain outlet pipe)	pump,40,41			
Stop motor Hydraulic unit 2			M804	M804									
Emergency stop	**Signal**		**New Item**	**Old Item**					**Note**	**Option**			
Stop hydraulic motor unit1			M802	M802							SP		
Stop hydraulic motor unit 2			M804	M804						pump,40,41	SP	PP	
Stop main motor			M801	M801							SP		
Close cooling water valve	24v		K810	Y810 (V55)					24V supply from process panel		SP		
Close cooling water valve			Q810	F810 (V55)					Air supply from process panel	11		PP	
Close steam valve	24v		K811	Y811 (V48)					24V supply from process panel	12		PP	
Close steam valve			Q811	F811 (V48)					Air supply from process panel	11, 12		PP	
Stop Pressure lubrication pump			M803	M803					Delay 60s after main motor stop		SP		
Feedpump									Stop Feedpump			PP	
Release Door guard 1	24 V		S808, K808, BG808	S808, Y809, S809					Delay 120s after main motor stop	OR	SP		
Release Door guard 2	24V		BG809	B809						pump,40,41	SP	PP	
Release Hydraulic remote on/off valve	24 V		K819	Y819									
OR = On request													
SP = Starter Panel													
PP = Process Panel													
* LPRV (M804) and K819 activated external													
AIC = Aseptic Intermediate Cleaning													

1.3 Installation Instructions

1.3.1 Requirements on Personnel

- Certified according to local regulations

WARNING

Unauthorized personnel

Operation by unauthorized personnel may endanger personnel and property.



GF000009

1.3.2 Storage

CAUTION

Noncompliance with requirements may damage the equipment!

Temperatures:	+10°C - +40°C (+50°F - +104°F)
Humidity:	20% - 85%

Avoid storage in the same facilities as open drums with cleaning solutions due to risk for corrosion.

1.3.3 Unloading and Transportation

Observe the signs centre of gravity (1).

The weight is marked on the crate.

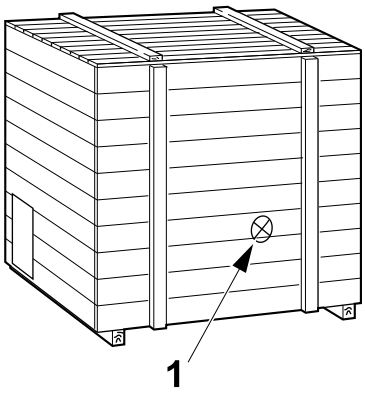

1 Centre of gravity

1.3.4 Unpacking and Inspection

- Check the equipment against the packing lists (1) attached to the crates.
- Report any damage to Tetra Pak immediately.

Note! If a mobile crane must be used to position the machine, position the crate before unpacking.

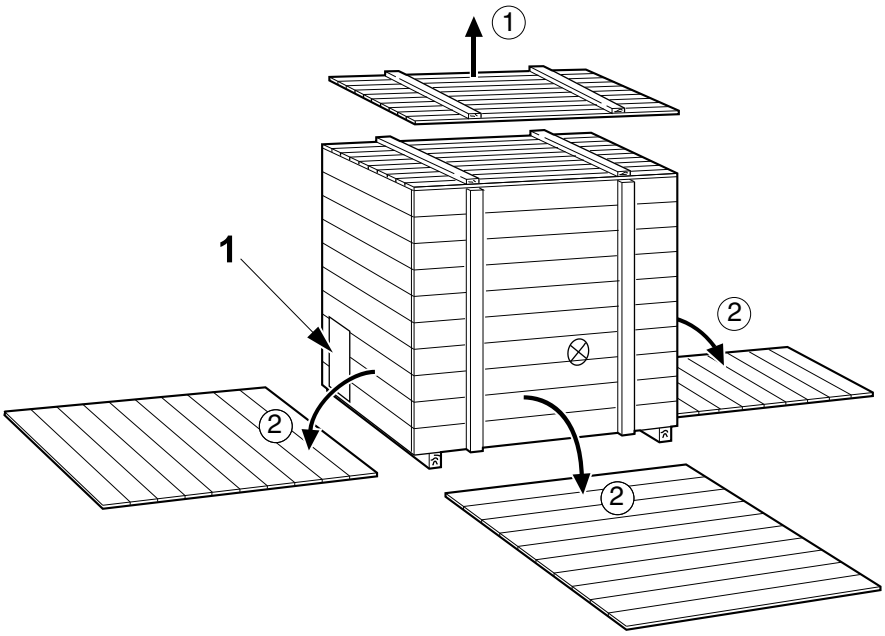

1 Packing list

1.3.5 Positioning and Erection

- Put the homogenizer on the floor.

CAUTION

Lifting with crane

Do not attach strings directly to the homogenizer, use the export packing.

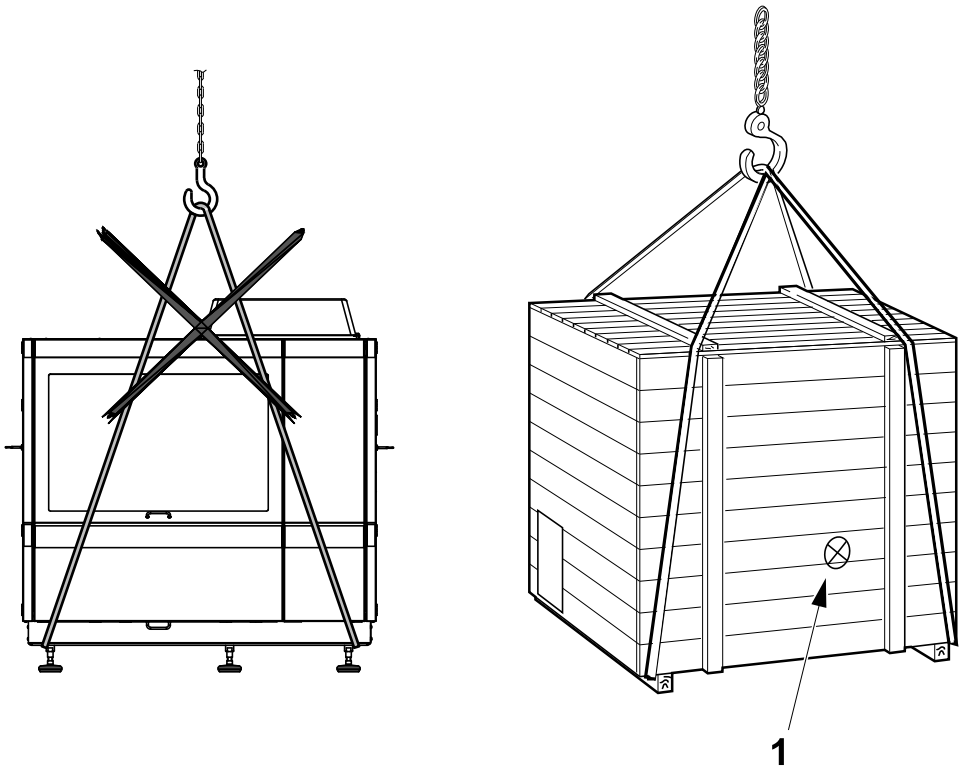

1 Centre of gravity

CAUTION

Lifting with fork lift truck

Lift the homogenizer either from the rear or front side. Observe the centre of gravity!

1	Fork lift, Alternative 1
2	Fork lift, Alternative 2
3	Centre of gravity

1.3.5.1 Level the Machine

Measure the level of the homogenizer, length- and side ways, with a machinists level placed on the pump block.

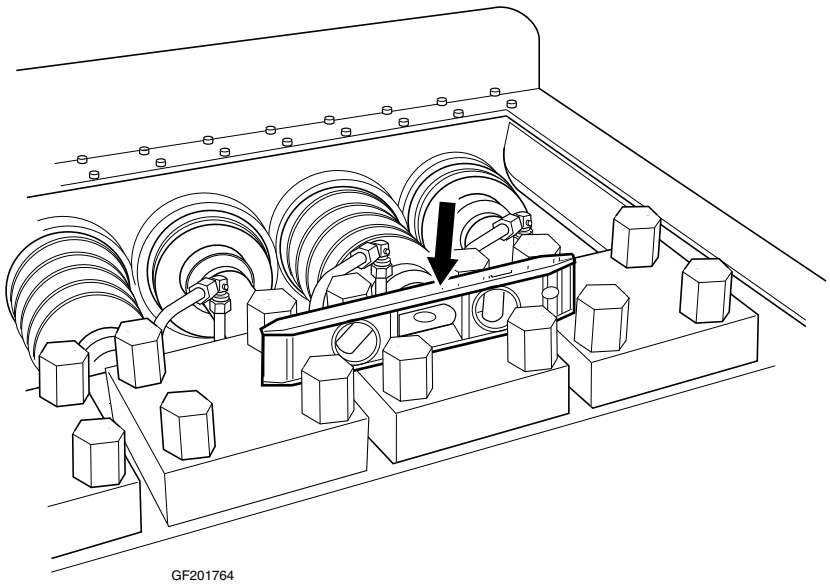

Adjust the level by adjusting the machine feet. Adjust in the order given in the illustration.

The sleeve is functioning as a lock nut, loosen it one turn before turning the foot. Make sure to lock the sleeve when finished.

Machine feet
Adjustment order

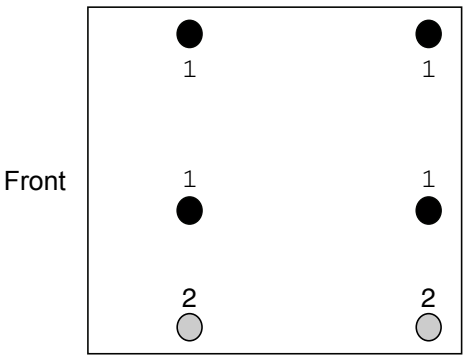

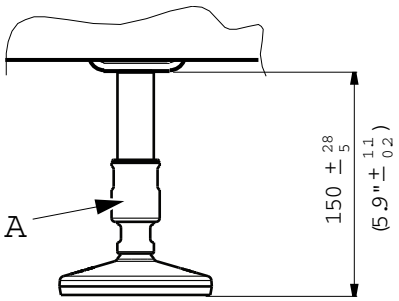

A= Sleeve (Lock nut)

Note! In order to minimize vibrations:

- keep distance between homogenizer and floor as low as possible
- tighten all machine feet equally against the floor

1.3.6 Pulsation Dampers

(Used to level out pressure variations).

Adjust to vertical position.

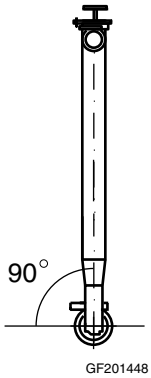

1.3.6.1 Put Oil in the Crankcase

CAUTION

Running the machine without oil will cause damage to the crankshaft.
The crankcase is at delivery empty of oil. Top up to the Max. level marked on the sight glass.

(The gearbox and the hydraulic unit are at delivery filled with oil).

For oil type and oil amount, see 1.4 Lubrication on page 1-40.

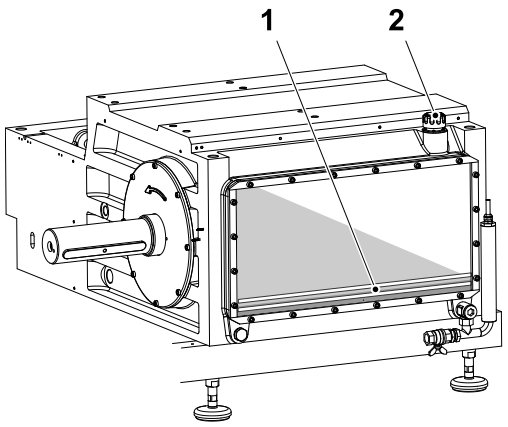

1 Sight glass
2 Filler cap

1.3.6.2 Connect

- product supply
- service media supply
- electric power

according to 1.2 Preparatory Work on page 1-6.

Note! Before connecting the steam supply to the machine, the steam pipes must be blown clear with repeated blasts of steam, lasting 5-10 minutes.

1.4 Lubrication

1.4.1 Recommended Oil

Crankcase			
Recommended oil: Circulation/gearbox oils with EP additives which do not harm slidebearings (yellow metals)			
Mineral type		**Standard**	
Supplier	**Type**	**Viscosity***	
BP/Castrol	Energol GR-XP	220	
Exxon/Mobil	Mobilgear 600 XP	220	
Shell	Omala S2 B	220	
Klüber	Klüberoil GEM 1	220	
Synthetic Type**		**Standard**	**Heavy Duty********
Supplier	**Type**	**Viscosity***	
BP/Castrol	Alphasyn EP	220	460
Exxon/Mobil	SHC 630-634	220	460
Shell	Morlina S4 B	220	460
Klüber	Klübersynth GEM 4 N	220	460
Food GradeType***		**Standard**	**Heavy Duty********
Supplier	**Type**	**Viscosity***	
BP/Castrol	Optileb GT	220	460
Exxon/Mobil	SHC Cibus	220	460
Fuchs	Fuchs Cassida Fluid GL	220	460
Klüber	Klüberoil 4 UH1	220	460
Tetra Pak	Lubricant H1-0540, PAO v220	220	

* Viscosity in mm^2/sec (cSt) at 40°C (104°F)

** A synthetic oil for the crank case must be of PAO (poly alfa olefine) type, like the Omala, that is mixable with mineral oils and does not affect rubber, sealings and paint.

*** Conform with FDA 21 CFR 178.3570 and classified in NSF H1.

**** Heavy Duty. Start sequence with high load and low r.p.m.

Note! Green oils is for the time being not available, but for some viscosities, and their lubrication performance is not yet good enough for use in our type of heavy duty machines.

(Cont'd)

(Cont'd)

Gearbox		
Recommended oil: Gearbox oil		
Mineral type		
Supplier	**Type**	**Viscosity***
BP/Castrol	Energol GR-XP	320
Exxon/Mobil	Mobilgear 600 XP	320
Shell	Omala S2 B	320
Klüber	Klüberoil GEM 1	320
Synthetic Type**		
Supplier	**Type**	**Viscosity***
BP/Castrol	Enersyn HTX	220-320
Exxon/Mobil	SHC 630-632	220-320
Shell	Morlina S4 B	220-320
Klüber	Klübersynth GEM 4 N	220-320
Food GradeType***		
Supplier	**Type**	**Viscosity***
BP/Castrol	Optileb GT	220-320
Exxon/Mobil	SHC Cibus	220-320
Fuchs	Fuchs Cassida Fluid GL	220-320
Klüber	Klüberoil 4 UH1	220-320
Tetra Pak	Lubricant H1-0540, PAO v220	220
Tetra Pak	Lubricant H1-0500, PAO v320	320

* Viscosity in mm^2/sec (cSt) at 40°C (104°F)

** A synthetic oil for the gearbox must be of PAO (poly alfa olefine) type, like the Omala, that is mixable with mineral oils and does not affect rubber, sealings and paint. If the gearbox temperatur is kept to max. 70 °C (158°F), 220 cST is sufficient.

*** Conform with FDA 21 CFR 178.3570 and classified in NSF H1.

(Cont'd)

(Cont'd)

Hydraulic unit		
Recommended oil: Hydraulic oil		
Mineral type		
Supplier	**Type**	**Viscosity***
BP/Castrol	Bartran	68
Exxon/Mobil	Mobil DTE Excel	68
Shell	Tellus S2 M	68
Klüber	Lamora HLP 68	68
Synthetic Type**		
Supplier	**Type**	**Viscosity***
BP/Castrol	-	-
Exxon/Mobil	Mobil SHC 526	68
Shell	Tellus S4 ME	68
Klüber	Klüberfood 4 NH1	68
Food GradeType***		
Supplier	**Type**	**Viscosity***
BP/Castrol	Optileb HY	68
Exxon/Mobil	SHC Cibus	68
Fuchs	Fuchs Cassida Fluid HF	68
Klüber	Klüberfood 4 NH1	68

* Viscosity in mm^2/sec (cSt) at 40°C (104°F)

** A synthetic oil for the hydraulic unit must be of PAO (poly alfa olefine) type, like the Omala, that is mixable with mineral oils and does not affect rubber, sealings and paint.

*** Conform with FDA 21 CFR 178.3570 and classified in NSF H1. Required to fulfil the 3A sanitary standard.

(Cont'd)

(Cont'd)

Main drive motor		
Recommended grease		
Supplier	**Type**	**Viscosity***
BP/Castrol	Energrease LS EP 1	115
Exxon/Mobil	Mobilith SHC	100
Shell	Shell Gadus S2 V100	100
Klüber	Klüberquiet BQH 72-102	100
Food GradeType* **		
Supplier	**Type**	**Viscosity***
BP/Castrol	-	-
Exxon/Mobil	Mobil grease FM 101	100
Fuchs	Fuchs Cassida RLS 2	150
Klüber	Klübersynth UH1 14-151	150

* Viscosity in mm^2/sec (cSt) at 40°C (104°F)

*** Conform with FDA 21 CFR 178.3570 and classified in NSF H1.

1.4.1.1 Oil Amount

Crankcase	**Gearbox**	**Hydraulic unit**
Approx. 100 litres (26 U.S. gallons)	Approx. 29 litres (7.7 U.S. gallons)	Approx. 9 litres (2.4 U.S. gallons)
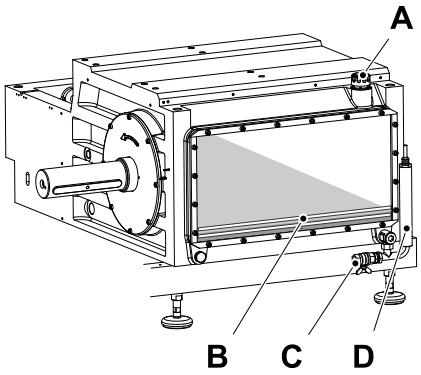	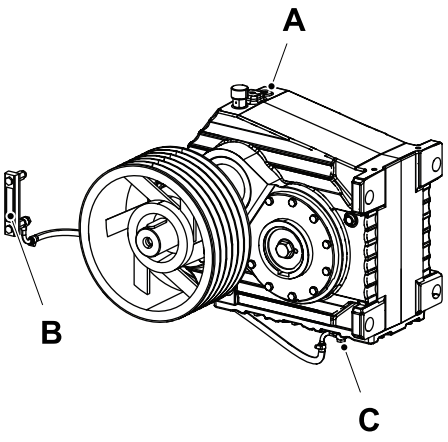	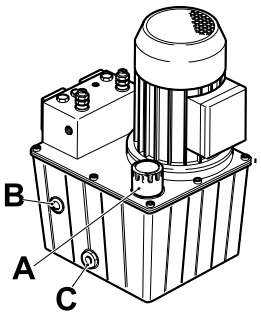
	A - Filler cap B - Level glass	C - Drain D - Level switch

1.5 Check After Installation

1.5.1 Safety

WARNING

Failure to make these checks will cause immediate danger to life!

CAUTION

Failure to make these checks may cause damage to the machine!

Check:

- All cables for damage
- That all cables are connected correctly
- That all covers are correctly installed
- That the product outlet pipes are not blocked in any way

(Cont'd)

(Cont'd)

Check:

Oil level in the:

- crankcase
- hydraulic unit
- gearbox

Direction of rotation for the:

- crankcase shaft (as illustrated)
- pressure lubricating pumps (as illustrated)
- hydraulic pump (as illustrated)

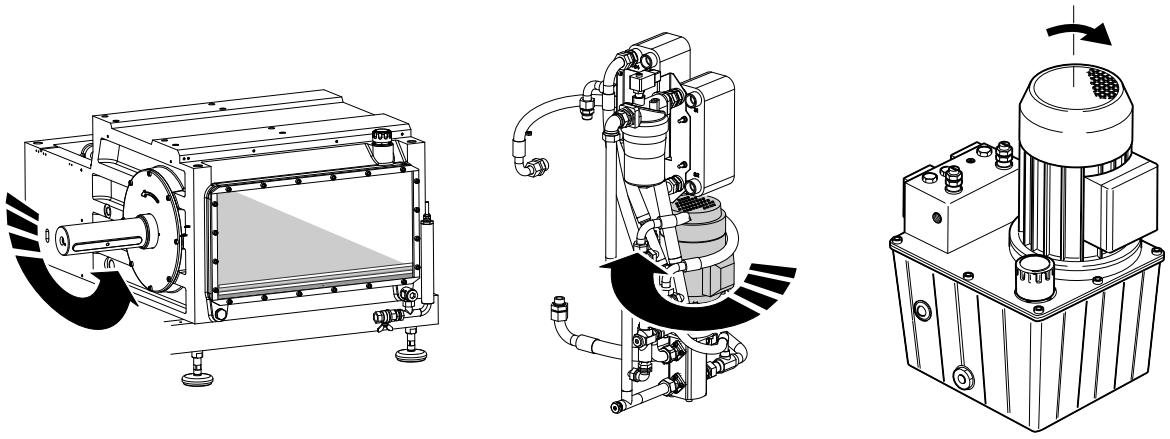

- That product with correct feed pressure is available
- Cooling water circulation; check the drainage outlet
- Condensate water circulation; check the drainage outlet
- The oil pressure for the crankcase, adjust to 6-8 bar (90-120 psi)
- That the power consumption corresponds to the test protocol

This page intentionally left blank

2 Maintenance

2.1 Description 2-7

2.1.1 Main Groups of the Machine 2-7

2.1.2 Service Preparations 2-8

2.2 Crank Case 2-9

2.2-1 Crank Case - Check Oil 2-9

2.2-2 Crank Case - Change Oil 2-10

2.2-3 Crank Case - Check Oil Level Guard 2-11

2.2-4 Crank Case - Change Crankshaft Bearings 2-12

2.2-5 Crank Case - Remove / Install Connecting Rod 2-23

2.2-6 Crank Case - Check Connections 2-23

2.2-7 Crank Case - Set Connections 2-24

2.2-8 Crank Case - Check Bellows 2-27

2.2-9 Crank Case - Change Bellows 2-28

2.3 Cooling Circuit 2-29

2.3.1 Cooling Circuit - Valve Activation Chart 2-31

2.3-1 Cooling Circuit - Check Piping 2-31

2.3-2 Cooling Circuit - Check Regulating Valves 2-31

2.3-3 Cooling Circuit - Check Water Valve 2-32

2.3-4 Cooling Circuit - Check Cooling Water Regulator 2-33

2.3-5 Cooling Circuit - Check Thermometer 2-33

2.3-6 Cooling Circuit - Check Steam valve 2-34

2.3-7 Cooling Circuit - Delime Condenser 2-35

2.3-8 Cooling Circuit - Check Condensate Regulating Valve 2-36

2.4 Wet End 2-37

2.4.1 Piston Cartridge 2-37

2.4.1-1 Piston Cartridge - Check 2-37

2.4.1-2 Piston Cartridge - Remove 2-39

2.4.1-3 Piston Cartridge - Disassemble 2-40

2.4.1-4 Piston Cartridge - Assemble 2-42

2.4.1-5 Piston Cartridge- Change Piston 2-43
2.4.1-6 Piston Cartridge - Change Piston Packing 2-44

2.4.2 Valve Cartridge 2-45

2.4.2-1 Valve Cartridge - Remove 2-45
2.4.2-2 Valve Cartridge - Assemble 2-47
2.4.2-3 Valve Cartridge - Check 2-48
2.4.2-4 Valve Cartridge - Change Valve Seals 2-49

2.5 Homogenization Head 2-51

2.5-1 Homogenization Head - Check 2-51
2.5-2 Homogenization Head - Remove 2-52
2.5-3 Homogenization Head - Assemble 2-53
2.5-4 Homogenization Device - Disassemble Housing 2-54
2.5-5 Homogenization Device - Assemble Housing 2-55
2.5-6 Homogenization Head - Check Seat 2-56
2.5-7 Homogenization Head - Turn/Change Seat 2-57
2.5-8 Homogenization Head - Check Forcer 2-58
2.5-9 Homogenization Head - Turn/Change Forcer Disc 2-58
2.5-10 Homogenization Head - Change Hydraulic Cylinder Seals 2-59

2.5.1 Flange Manometer 2-61

2.5.1-1 Flange Manometer - Check Pressure Gauge 2-61
2.5.1-2 Flange Manometer - Change Pressure Gauge O-ring 2-62

2.6 Hydraulic Unit 2-63

2.6-1 Hydraulic Unit - Check 2-63
2.6-2 Hydraulic Unit - Check Pressure Gauge 2-64
2.6-3 Hydraulic Unit - Check Pressure Relief Valve (Optional) 2-65
2.6-4 Hydraulic Unit - Check Remote Setting Valve (Optional) 2-65
2.6-5 Hydraulic Unit - Check Sensor, Hydraulic Pressure (Optional) 2-66

2.6.1 Hydraulic Unit 2-66

2.6.1-1 Hydraulic Unit - Check 2-66

2.6.1-2 Hydraulic Unit - Change Oil 2-67

2.6.1-3 Hydraulic Unit - Disassemble 2-67

2.6.1-4 Hydraulic Unit - Change Parts 2-68

2.6.1-5 Hydraulic Unit - Check Safety Valve 2-70

2.7 Pressure Lubricating System 2-71

2.7-1 Pressure Lubricating System - Check Motor 2-72

2.7-2 Pressure Lubricating System - Check Safety Valve 2-73

2.7-3 Pressure Lubricating System - Check Oil Filter 2-74

2.7-4 Pressure Lubricating System - Change Oil Filter 2-76

2.7-5 Pressure Lubricating System - Check Pressure Regulator 2-76

2.7-6 Pressure Lubricating System- Check Pressure Gauge 2-78

2.7-7 Pressure Lubricating System - Check Pressure Guard 2-78

2.7-8 Pressure Lubricating System - Check Heat Exchanger 2-80

2.8 Frame with Body 2-81

2.8-1 Frame with Body - Check Doors and Covers 2-81

2.8-2 Frame with Body - Check Gas springs 2-82

2.8-3 Frame with Body - Check Electromagnetic Door Lock / Door Guard 2-83

2.9 Drive Unit 2-84

2.9-1 Drive Unit - Clean Drive Motor 2-84

2.9-2 Drive Unit - Lubricate Drive Motor 2-84

2.9-3 Drive Unit - Check V-belts 2-85

2.9-4 Drive Unit - Change V-belts 2-88

2.9-5 Drive Unit - Check Belt Pulleys 2-90

2.9-6 Drive Unit - Remove Gearbox 2-90

2.9-7 Drive Unit - Fit Gearbox 2-92
2.9-8 Drive Unit - Check Oil 2-93
2.9-9 Drive Unit - Change Oil 2-94
2.9-10 Drive Unit - Check Seal Rings 2-95
2.9-11 Drive Unit - Change Seal Rings 2-96
2.9-12 Drive Unit - Change Vibration Elements 2-97

2.10 Product Connections 2-98

2.10.1 Inlet 2-98

2.10.1-1 Inlet - Change Product Connection Gaskets 2-98

2.10.1.1 Pressure Transmitter (Option 48) 2-99

2.10.1.1-1 Pressure Transmitter - Description 2-99
2.10.1.1-2 Pressure Transmitter - Change 2-100

2.10.2 Outlet 2-101

2.10.2-1 Outlet - Change Product Connection Gaskets 2-101

2.11 Electrical System 2-102

2.11.1 Wiring Diagram 2-102

2.11.2 Box 1 - Power 2-102

2.11.3 Box 2 - Signal, Standard Homogenizer 2-104

2.11.4 Cables 2-106

2.11.4-1 Cables - Check 2-106

2.11.5 Electrical Cabinet (Optional) 2-106

2.11.5-1 Cooling Fan Filter - Change 2-106

2.11.6 Temperature Transmitter 2-107

2.11.6-1 Temperature Transmitter - Check 2-107

2.11.7 Emergency Stop 2-108

2.11.7-1 Emergency Stop - Check 2-108

2.11.8 Alarm System 2-109

2.11.8-1 Alarm System - Check 2-109

2.12 Miscellaneous 2-110

2.12.1 Tools 2-110

2.12.1.1 Tools included in tool kit 2-110
2.12.2 Lubrication 2-111
2.12.2.1 Recommended Oil 2-111
2.12.2.2 Oil Amount 2-114
2.12.3 Torque Specifications 2-115
2.12.4 Trouble Shooting 2-117

2.1 Description

2.1.1 Main Groups of the Machine

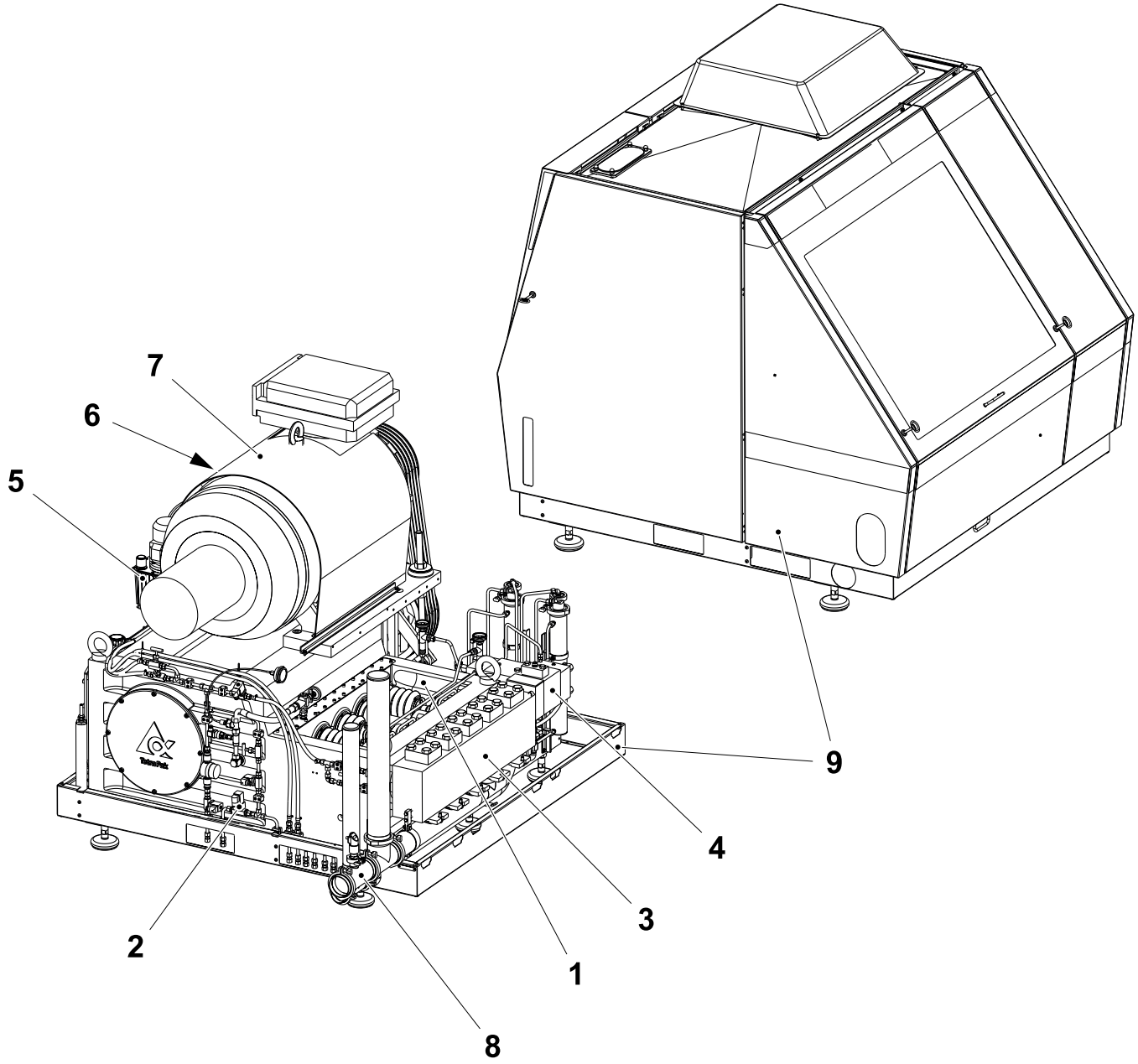

1 Crank case
2 Cooling circuit
3 Wetend
4 Homogenizing head
5 Hydraulic unit
6 Pressure lubricator
7 Drive unit
8 Product connection
9 Frame with body

2.1.2 Service Preparations

WARNING

Risk of personal injury

After each service, always make sure that all covers are installed.

Before starting any maintenance work do as follows:

a) Turn off the main power and lock the main power switch in off position.

b) Depressurize the hydraulic system.

- Open the pressure adjusting valve in the hydraulic control device (in the two-stage version - open both valves).

c) Close the shut-off devices in the product inlet pipes.

d) Close the cooling water inlet.

e) Shut down the condensation unit.

f) Close the steam inlet.

- (The steam inlet valve is closed when the power is turned off. For safety reasons, turn off the external valve is applicable.)

g) Let the condensation unit cool down.

h) Remove the cladding.

Note! When working with parts in contact with product, rinse and clean all parts before dismantling.

2.2 Crank Case

2.2-1 Crank Case - Check Oil

a) Check if there is any water in the oil, by draining a small amount in a bucket and inspect. Drain off any water through the drain valve (1).

b) Make sure that the oil level is within ± 5 mm of the arrow (3). Open filler cap (2) and top up if necessary.

For type and amount of oil, see 2.12.2 Lubrication on page 2-111.

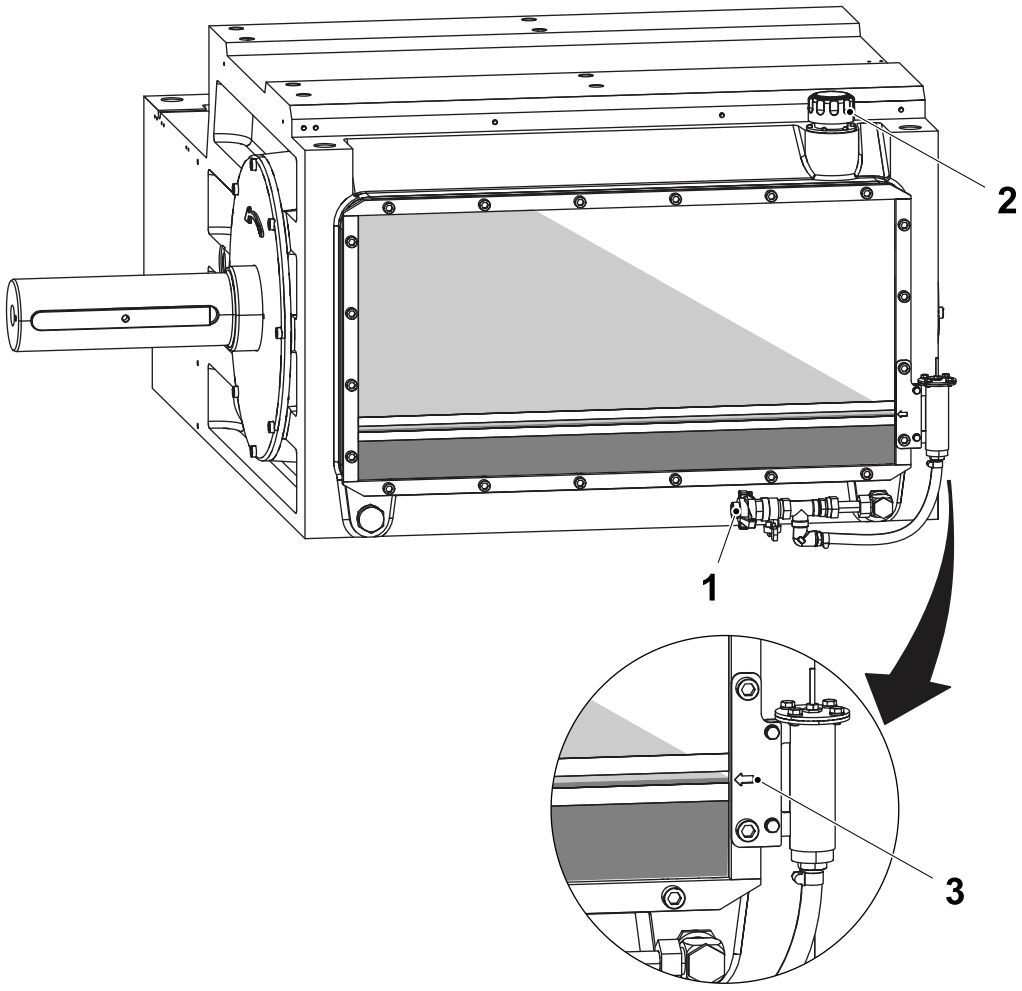

1 Drain valve
2 Filler cap, [44]
3 Arrow

2.2-2 Crank Case - Change Oil

a) Open the drain valve (1) and drain all oil from the housing.

b) Before filling with oil, check the oil level guard according to 2.2-3 Crank Case - Check Oil Level Guard on page 2-11.

c) Close the drain valve (1). Open filler cap (2) and fill up with new oil to within ± 5 mm of the arrow (3).

Note! Bleed the drain hose.

For type and amount of oil, see 2.12.2 Lubrication on page 2-111.

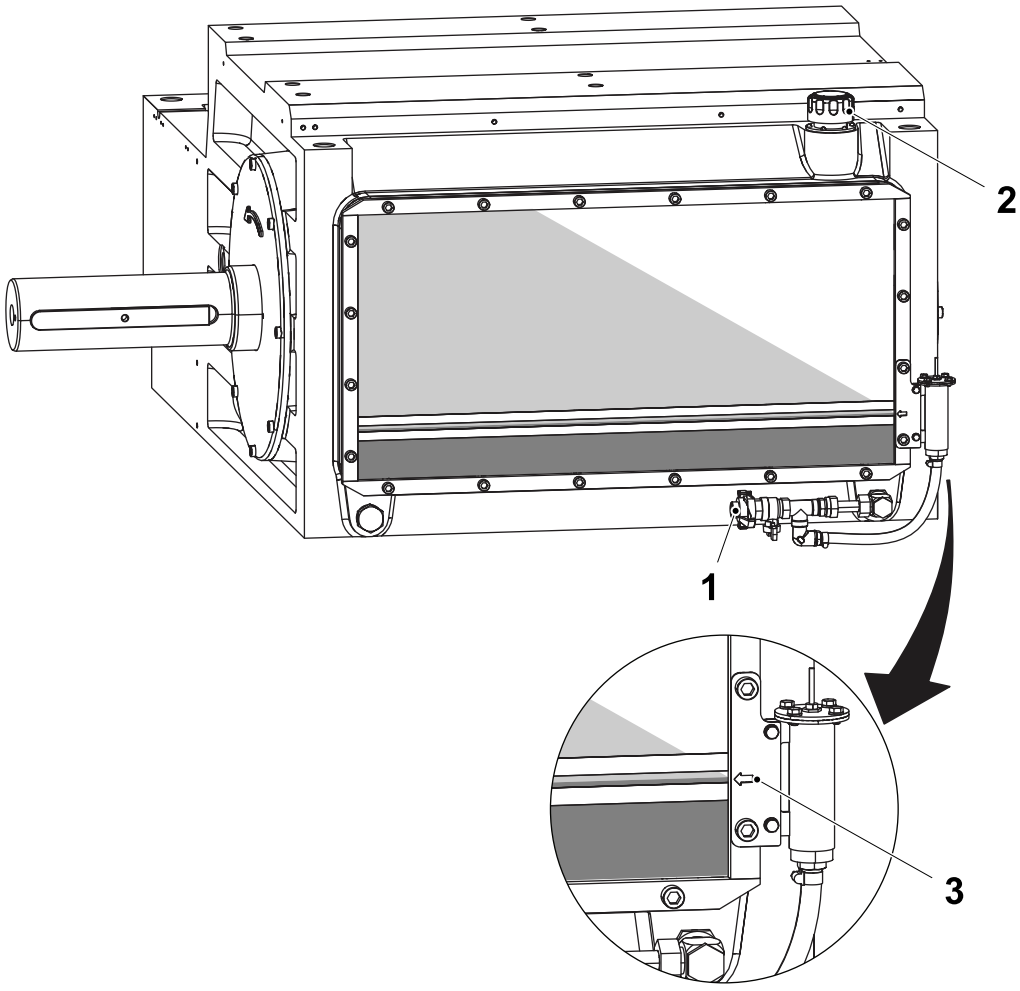

1 Drain valve, [140]
2 Filler cap, [44]
3 Arrow

2.2-3 Crank Case - Check Oil Level Guard

When filling the crank case with oil, make sure that the signals for low- and high level are achieved.

a) Loosen the screws (2).

b) Raise the oil level guard (1). The oil level guard should indicate that the oil level is too low.

c) Lower the oil level guard (1). The oil level guard should indicate that the oil level is too high.

d) Fasten the oil level guard (1) back in position.

See 2.11 Electrical System on page 2-102 for connections.

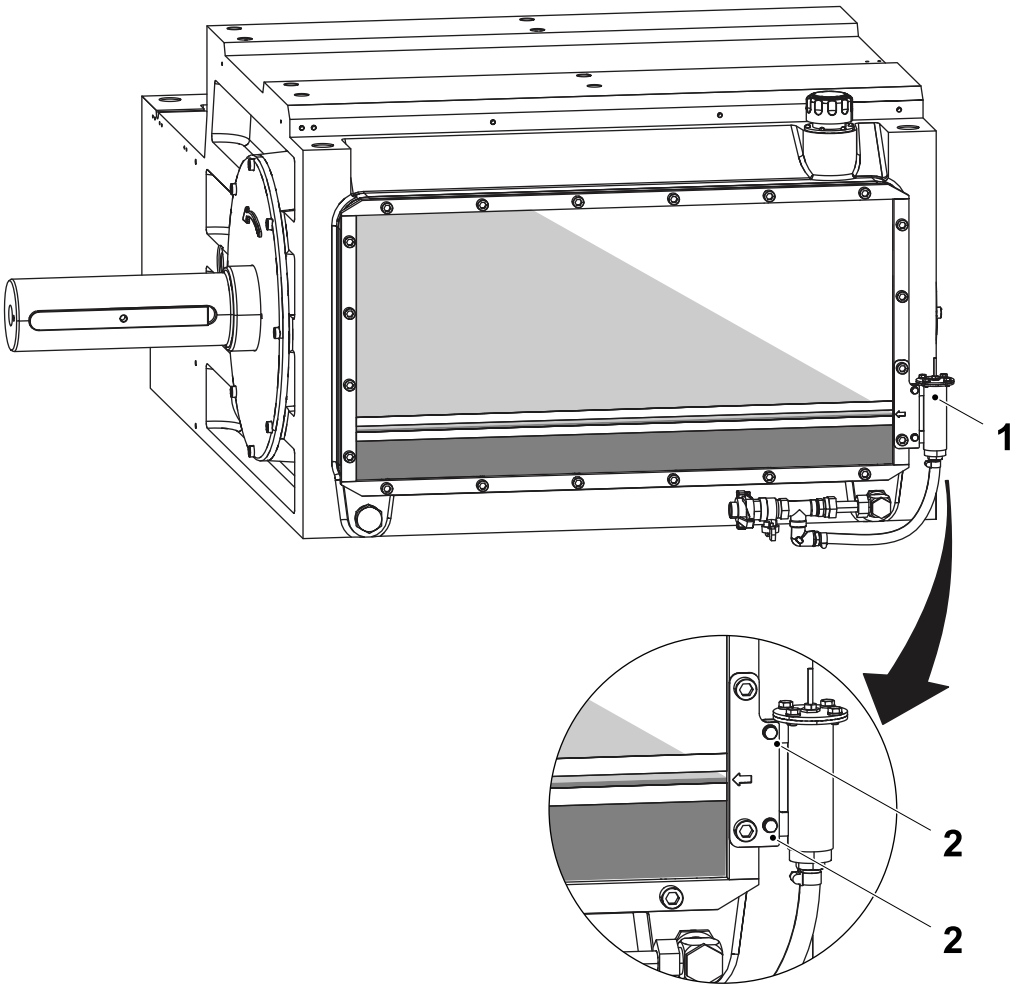

1 Oil level guard
2 Screw

2.2-4 Crank Case - Change Crankshaft Bearings

Change Crankshaft Plain Bearings

a) Remove the bellows with the bellow rings, see 2.2-9 Crank Case - Change Bellows on page 2-28.

b) Drain the crankcase oil and remove the rear cover (2).

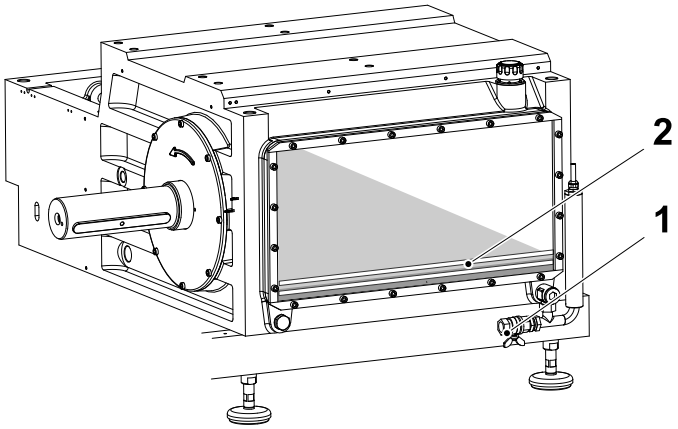

1 Drain
2 Rear cover, [40]

c) Remove the bolts (8) from the connecting rod (4) .

d) Remove the plain bearing cap (7) .

e) Push the cross head (3) forward with the connecting rod (4) and remove the plain bearing (5) and the plain bearing (6).

f) Clean the plain bearings, apply some oil and fit them to the connecting rod (4) and the plain bearing cap (7).

g) Push the cross head (3) with the connecting rod (4) and front plain bearing (5) against the crankshaft neck.

Note! The connecting rod and the plain bearing cap are numbered. The numbers must match and be turned the same way, up or down.

h) Clean the bolts (8) , remove any remains of locking compound under the bolt heads. Apply Molycote grease (Cu) to the bolt threads.

i) Install the bolts (8) , leave a gap of 5 mm between the bolt head and plain bearing cap. Clean the visible part of the bolt and its contact surface on the plain bearing cap (use degreasing compound). Apply locking compound (Locktite 275) at the undersides of the bolt heads and tighten the bolts evenly before applying the right torque, 200 Nm.

(Cont'd)

(Cont'd)

j) Check that the connecting rod is axially movable on the crankshaft and that the crankshaft can be turned smoothly and without any abnormal noise.

k) Install the bellows with bellow rings.

l) Remove all packing remains from the rear crankcase cover. Use silicone sealing compound, SILIKON RTV 595 (LOCTITE), between the crankcase and the cover. Tighten the screws for the crankcase cover.

m) Fill the crankcase with oil, see 2.2-2 Crank Case - Change Oil on page 2-10.

n) Install the rear machine cover.

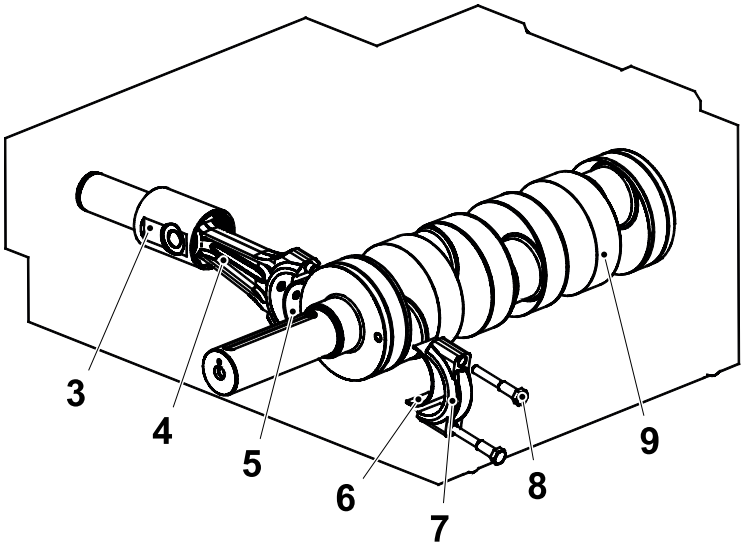

3 Cross head, [5]
4 Connecting rod, [10]
5 Plain bearing, [5]
6 Plain bearing, [5]
7 Plain bearing cap, [10]
8 Bolt, [4]
9 Crankshaft, [2]

Change Crankshaft Roller Bearings

Follow the removal instructions above.

Remove:

- the V-belts according to on page
- the gearbox oil, see 2.9-9 Drive Unit - Change Oil on page 2-94
- the gearbox according to on page
- the key from the crankshaft by help of a screw

(Cont'd)

(Cont'd)

Remove the crankshaft

a) Unscrew the screws (10).

b) Remove the shaft cover (11) , the o-ring (12) and the spacer ring (13).

c) Remove the bearing cover (15) and the o-ring (14).

d) Remove the bearing cover (15), the and the o-ring (14).

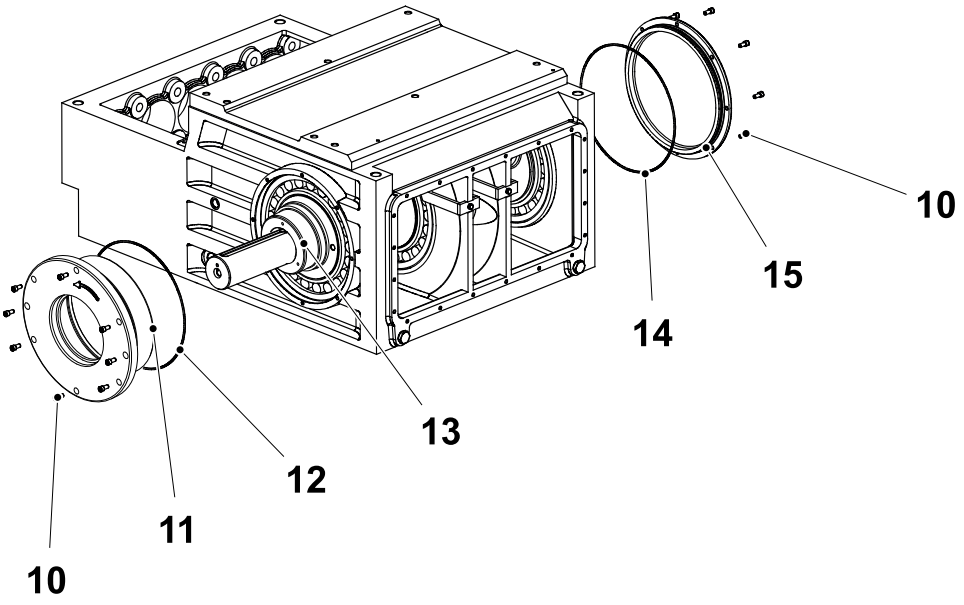

10 Screw, [20]
11 Shaft cover, [7]
12 O-ring, [34]
13 Spacer ring, [8]
14 O-ring, [33]
15 Bearing cover, [5]

(Cont'd)

(Cont'd)

e) Pull out the roller bearings outer ring (16) and outer ring (21).

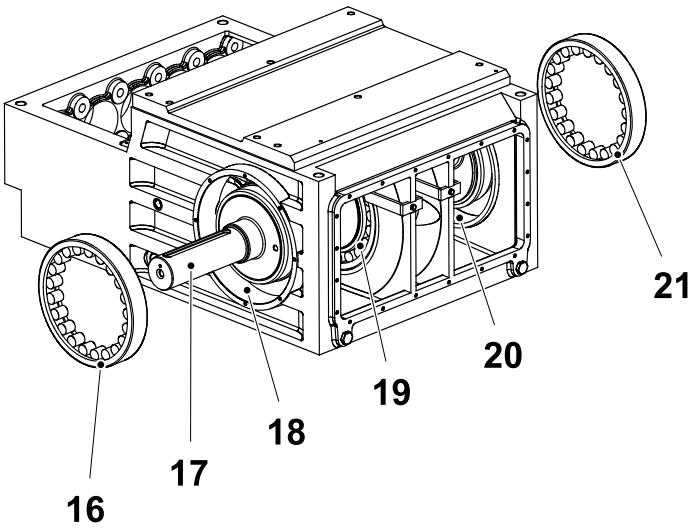

16 Outer ring, bearing roller, [43]
17 Crankshaft, [2]
18 Inner ring, roller bearing, [43]
19 Middle main bearing, [21]
20 Inner ring, roller bearing, [42]
21 Outer ring, bearing roller, [42]

(Cont'd)

(Cont'd)

f) Apply oil with pressure (23) to the inside of the roller bearing inner ring (22) and inner ring (24).

g) Remove the inner ring by help of a puller.

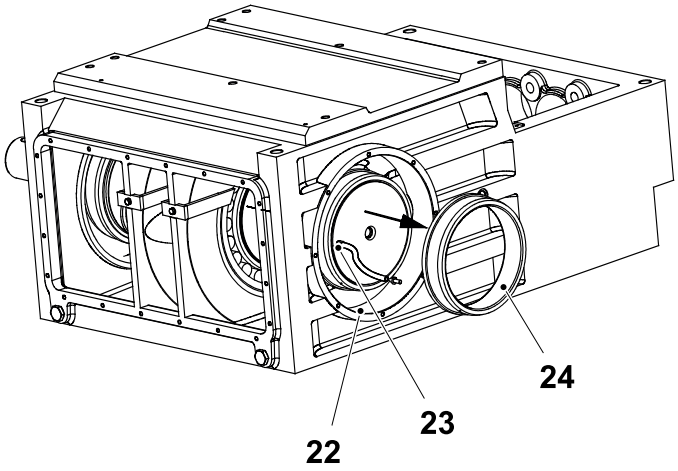

22 Inner ring, roller bearing (before removal), [42]
23 Oil pressure inlet
24 Inner ring, roller bearing (after removal), [42]

(Cont'd)

(Cont'd)

h) Fit the tool (27) to the right side of the crankshaft (25).

Tool: Rod with one threaded end (M30 - thread length 40 mm)

i) Use the lifting wires (26) and lift the crankshaft by help of a crane.

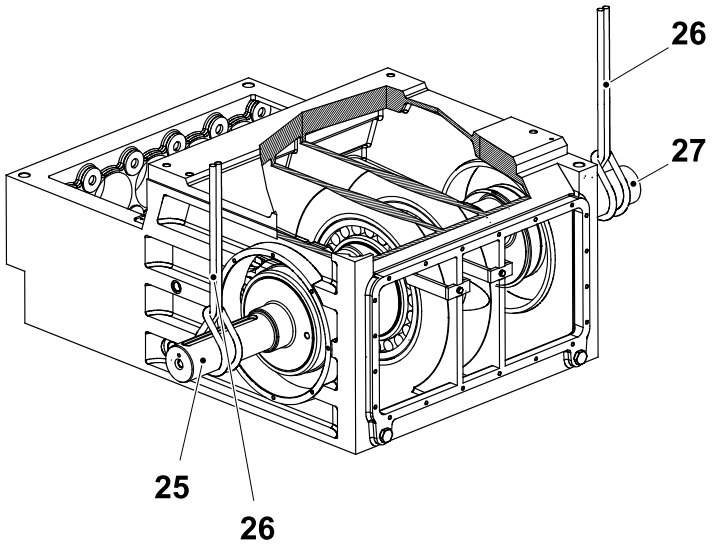

25 Crankshaft, [2]
26 Lifting wire
27 Tool

j) Pull out the crankshaft of the housing (towards the free end of the crankshaft).

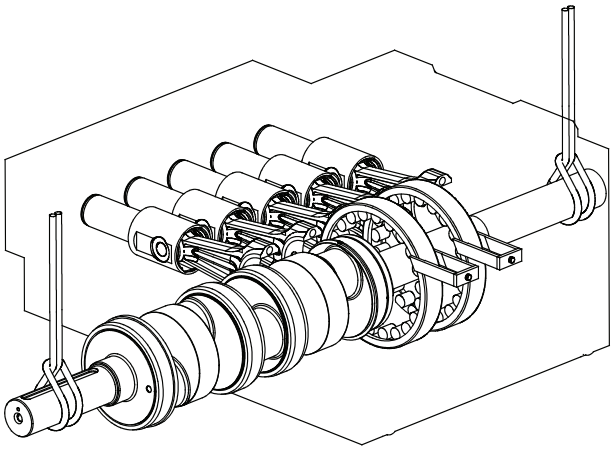

(Cont'd)

(Cont'd)

Remove Bearing Inner Rings

CAUTION
Burn hazard
Wear heat protective gauntlets.

a) Put the crankshaft (33) on a suitable support and heat the left inner ring (28) evenly by help of a welding torch and pull it off the crankshaft.

b) Remove the circlip (29) and circlip (37) . Remove the outer lock ring (30) and lock ring (36).

c) Heat the inner ring (31) and inner ring (35) evenly by help of a welding torch and pull them of the crankshaft.

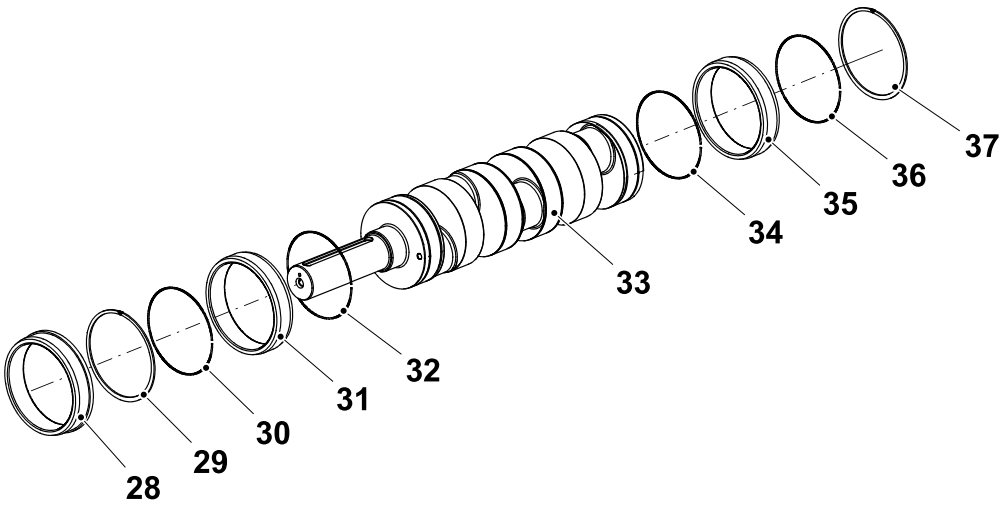

28 Inner ring, left main bearing, [43]
29 Circlip, [40]
30 Lock ring, [28]
31 Inner ring, middle main bearing, [21]
32 Lock ring, [28]
33 Crankshaft, [2]
34 Lock ring, [28]
35 Inner ring, middle main bearing, [21]
36 Lock ring, [28]
37 Circlip, [41]

(Cont'd)

(Cont'd)

Fit New Bearing Inner Rings

All parts must be clean and dry before installing (no remains of oil, grease or locking compound).

Make the assembly with the crankshaft in vertical position. Put the crankshaft on a solid flat surface (shaft end with key groove up).

CAUTION

Burn hazard

Wear heat protective gauntlets.

Use an induction heating apparatus to heat the inner rings and to approximately 90 °C.

(Cont'd)

(Cont'd)

Assembly sequence:

a) lock ring (40)

b) Inner ring (39); heat the inner ring and slip it on the crankshaft against the lock ring (40) and let it cool down.

c) Lock ring (38)

d) lock ring (43)

e) Inner ring (42); heat the inner ring and slip it on the crankshaft against the lock ring (43) and let it cool down.

f) Lock ring (41)

g) Circlip (45)

h) Inner ring (44); heat the inner ring and slip it on the crankshaft against the Circlip (45) and let it cool down.

i) Circlip (46); put the crankshaft in horizontal position and fit the circlip.

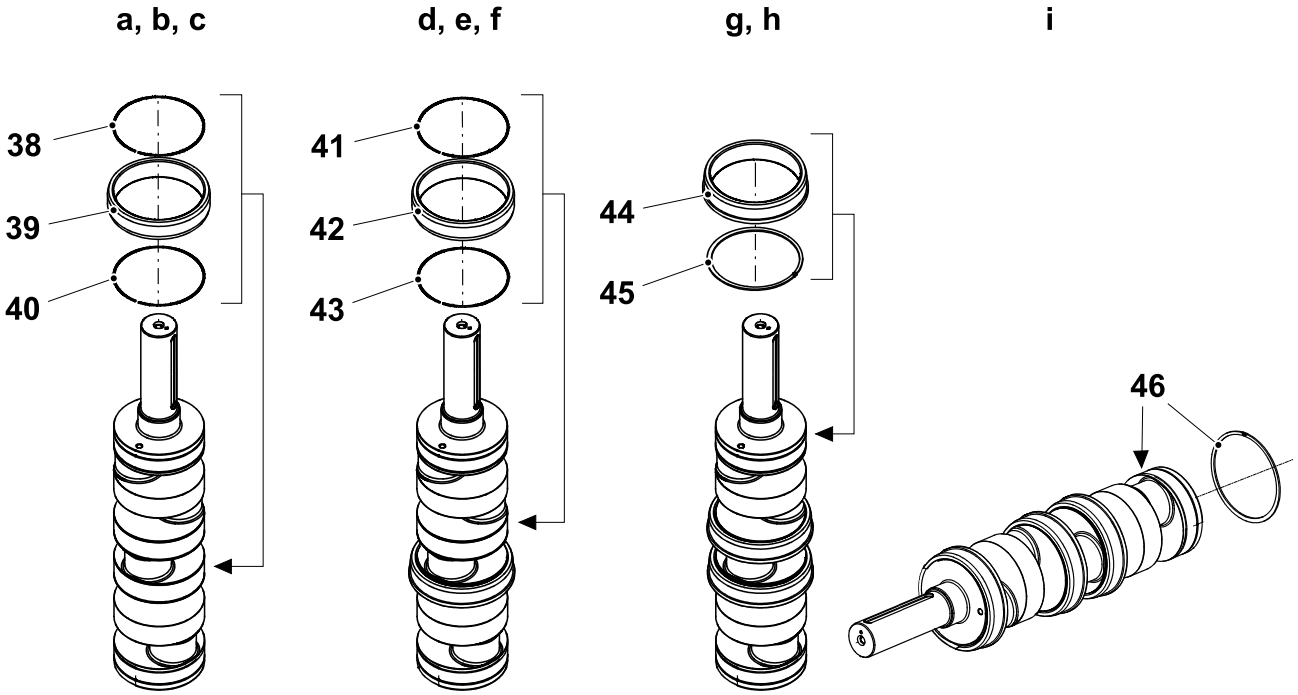

38 Lock ring, [28]
39 Inner ring, [21]
40 Lock ring, [28]
41 Lock ring, [28]
42 Inner ring, [21]
43 Lock ring, [28]
44 Inner ring, [43]
45 Circlip, [40]
46 Circlip, [40]

(Cont'd)

(Cont'd)

Remove Roller Bearings

In order to remove the roller bearings (55), the cross head (48) and cross head (50) with the connecting rod (57) and connecting rod (52) the following must first be removed:

a) Loosen and remove the clamps (54).

b) Push back the cross head (49) until the plan bearing cap of the connecting rod (56) is in the centre of the roller bearings.

c) Push the roller bearings (55) towards the centre of the crankcase, against the connecting rod (56).

d) Pull out (backwards) the cross head (48) and cross head (50) with the connecting rod (57) and connecting rod (52).

e) Take out the roller bearings.

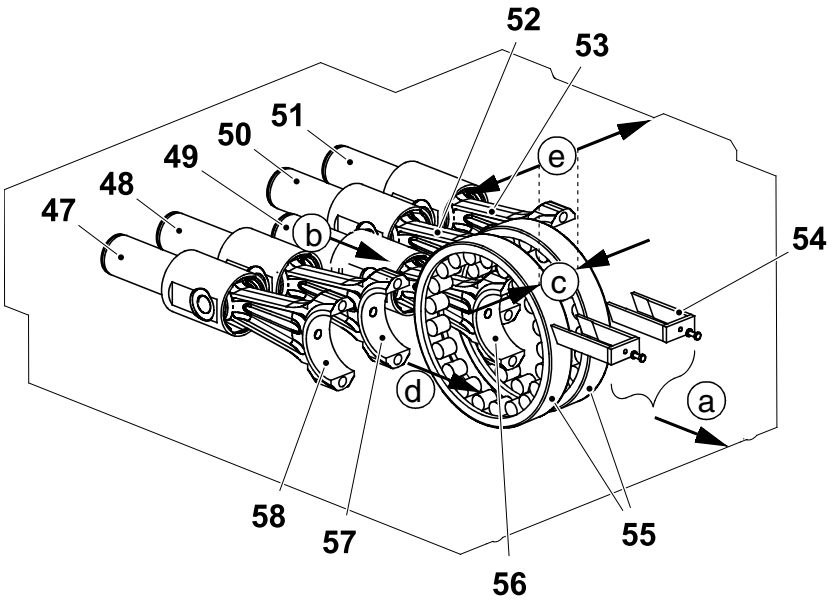

47 Cross head, [5]
48 Cross head, [5]
49 Cross head, [5]
50 Cross head, [5]
51 Cross head, [5]
52 Connecting rod, [10]
53 Connecting rod, [10]
54 Clamp
55 Roller bearing (outer ring), [21]
56 Connecting rod, [10]
57 Connecting rod, [10]
58 Connecting rod, [10]

(Cont'd)

(Cont'd)

Install Roller Bearings

All parts, including the bearing area in the crankcase, must be clean and dry before installing (no remains of oil, grease or locking compound).

Lubricate all bearing surfaces.

a) Push the cross head (49) until the plain bearing cap of the connecting rod (56) is in the centre of the roller bearings (approximately 100 mm from its front dead end position), see illustration.

b) Install and push the outer rings of the roller bearings (55) towards the connecting rod (56).

c) Install the cross head (48) and cross head (50) with the connecting rod (57) and connecting rod (52).

d) Push the roller bearings to the correct position.

e) Push the cross head (49) with the connecting rod (56) forward.

f) Secure the roller bearing outer rings with the clamps (54).

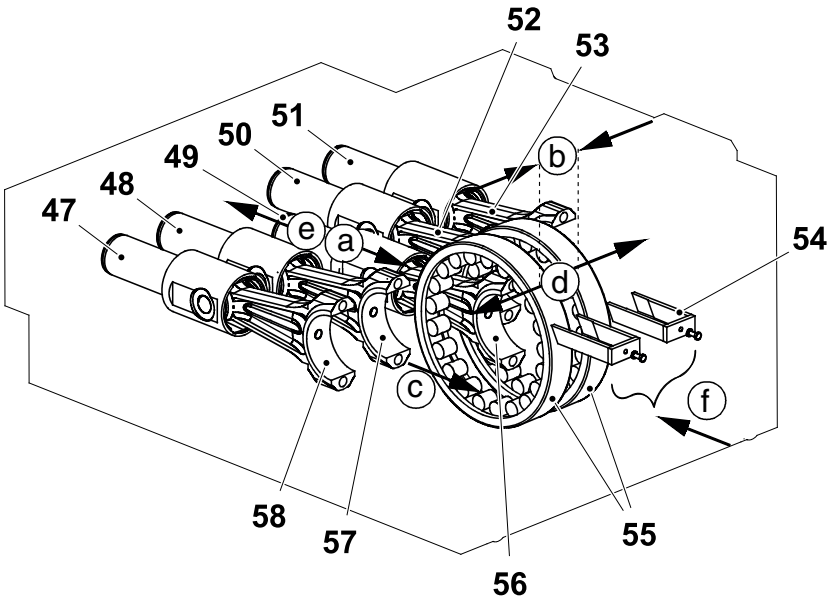

47 Cross head, [5]
48 Cross head, [5]
49 Cross head, [5]
50 Cross head, [5]
51 Cross head, [5]
52 Connecting rod, [10]
53 Connecting rod, [10]
54 Clamp
55 Roller bearing (outer ring), [21]
56 Connecting rod, [10]
57 Connecting rod, [10]
58 Connecting rod, [10]

(Cont'd)

(Cont'd)

Install Crankshaft

Install in reverse order to activity Change Crankshaft Roller Bearings on page 2-13.

Before installing clean all parts and lubricate all contact surfaces and bearings.

CAUTION
Burn hazard
Wear heat protective gauntlets.

a) The right inner ring of the roller bearing and its surface at the crankshaft must be clean and dry. Heat the inner ring by help of an induction heating apparatus to approximately 90 °C. Fit the ring on the crankshaft, against the circlip, and let it cool down.

b) Follow the instructions in section Change Crankshaft Plain Bearings on page 2-12:
   - Plain bearing caps
   - Crankcase rear cover
   - Oil fill

c) In reverse order to activity Change Crankshaft Roller Bearings on page 2-13:
   - Crankshaft key
   - Gearbox
   - V-belts
   - Gearbox oil

d) Install the rear machine cover.

2.2-5 Crank Case - Remove / Install Connecting Rod

To remove / install the cross heads and connecting rods:

- Follow the instructions in activity 2.2-4 Crank Case - Change Crankshaft Bearings on page 2-12.

2.2-6 Crank Case - Check Connections

During stand-still:

Clean the area and check that there is sufficient gap (0.1 to 0.2 mm) between the piston (1) and the cross head (10), see section 2.2-7 Crank Case - Set Connections.

Note! Too large gap results in a hammering noise and may cause damage to parts.

(Cont'd)

(Cont'd)

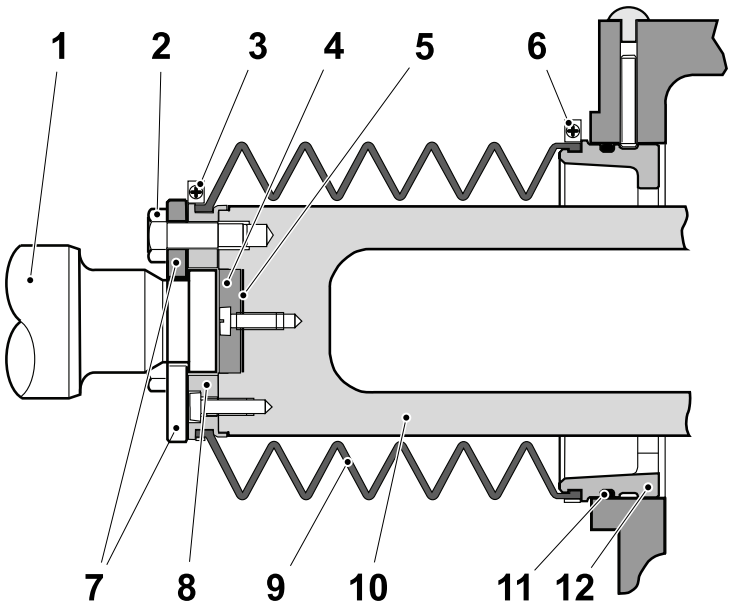

1 Piston, [9]
2 Screw, [25]
3 Hose clamp, [61]
4 Plate, [67]
5 Shims
6 Hose clamp, [62]
7 Piston connection ring, [79]
8 Bellow ring, front, [55]
9 Bellows, [60]
10 Cross head, [5]
11 O-ring, [51]
12 Bellow ring, rear, [50]

2.2-7 Crank Case - Set Connections

Removal

During stand-still:

(Cont'd)

(Cont'd)

a) Cover the drain hole in the bottom of the crank case.

b) Inch the machine by hand until the piston (1) is in its back end position.

c) Remove the three screws (2) and pull out the piston connection ring (3) .

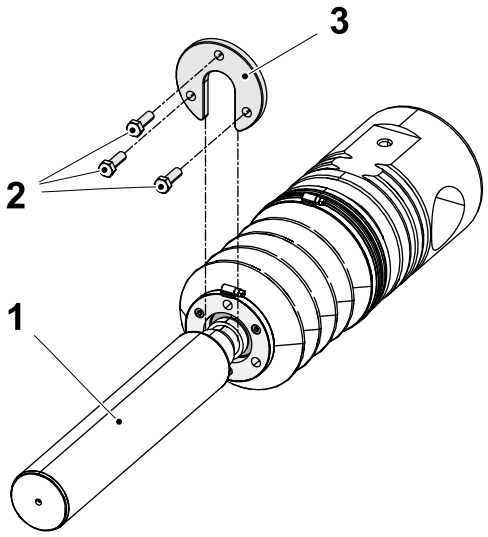

1 Piston
2 Screws
3 Piston connection ring

(Cont'd)

(Cont'd)

Measurement

Use the callipers (4) to measure distance d1 and d2 according to the figures below.

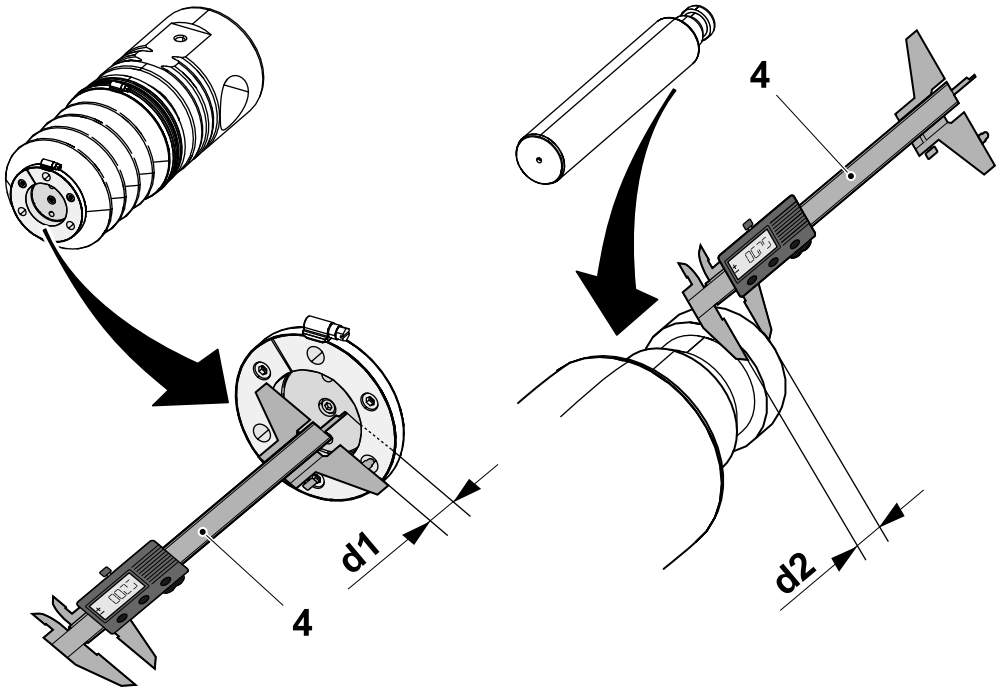

4 Callipers

Setting

Δd = d1 - d2, where Δd is equal to the gap between the plate (5) and the cross head (7) .

Recommended gap: 0.1 mm < Δd < 0.2 mm.

Adjust Δd by inserting shims (6) of appropriate thickness.

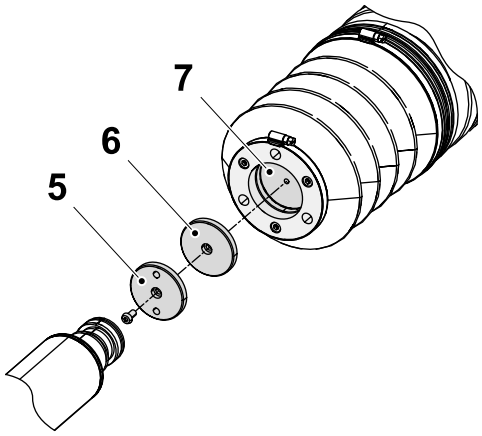

5 Plate
6 Shims
7 Cross head

2.2-8 Crank Case - Check Bellows

a) Check the bellows (9) for leaks and damage.

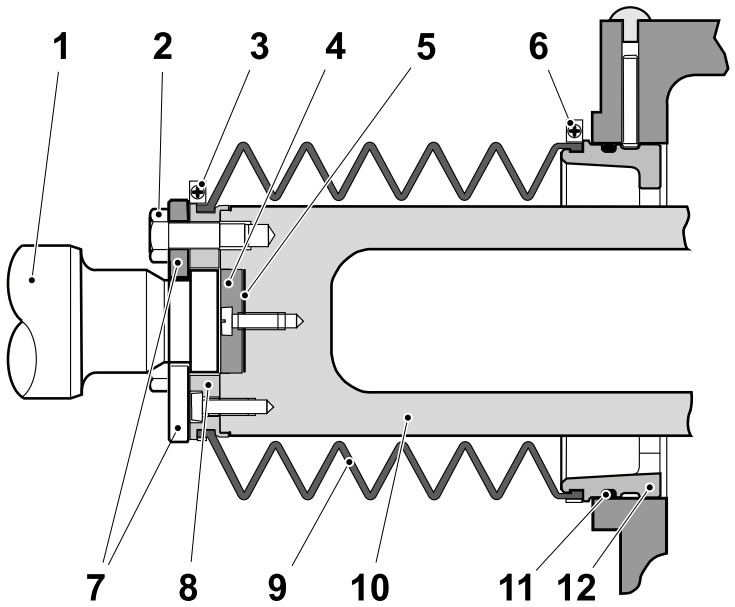

1 Piston, [9]
2 Screw, [25]
3 Hose clamp, [61]
4 Plate, [67]
5 Shims
6 Hose clamp, [62]
7 Piston connection ring, [79]
8 Bellow ring, front, [55]
9 Bellows, [60]
10 Cross head, [5]
11 O-ring, [51]
12 Bellow ring, rear, [50]

2.2-9 Crank Case - Change Bellows

Removal

a) Remove the piston connection according to activity 2.2-7 Crank Case - Set Connections on page 2-24.

b) Remove the hose clamp (3) and hose clamp (6).

c) Remove the bellows (9).

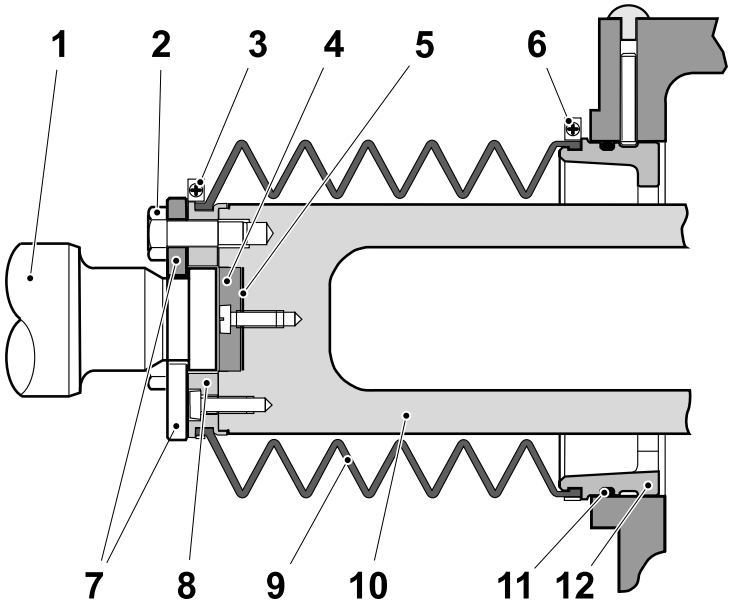

1 Piston, [9]
2 Screw, [25]
3 Hose clamp, [61]
4 Plate, [67]
5 Shims
6 Hose clamp, [62]
7 Piston connection ring, [79]
8 Bellow ring, front, [55]
9 Bellows, [60]
10 Cross head, [5]
11 O-ring, [51]
12 Bellow ring, rear, [50]

Fitting

a) Reassemble in reverse order.

2.3 Cooling Circuit

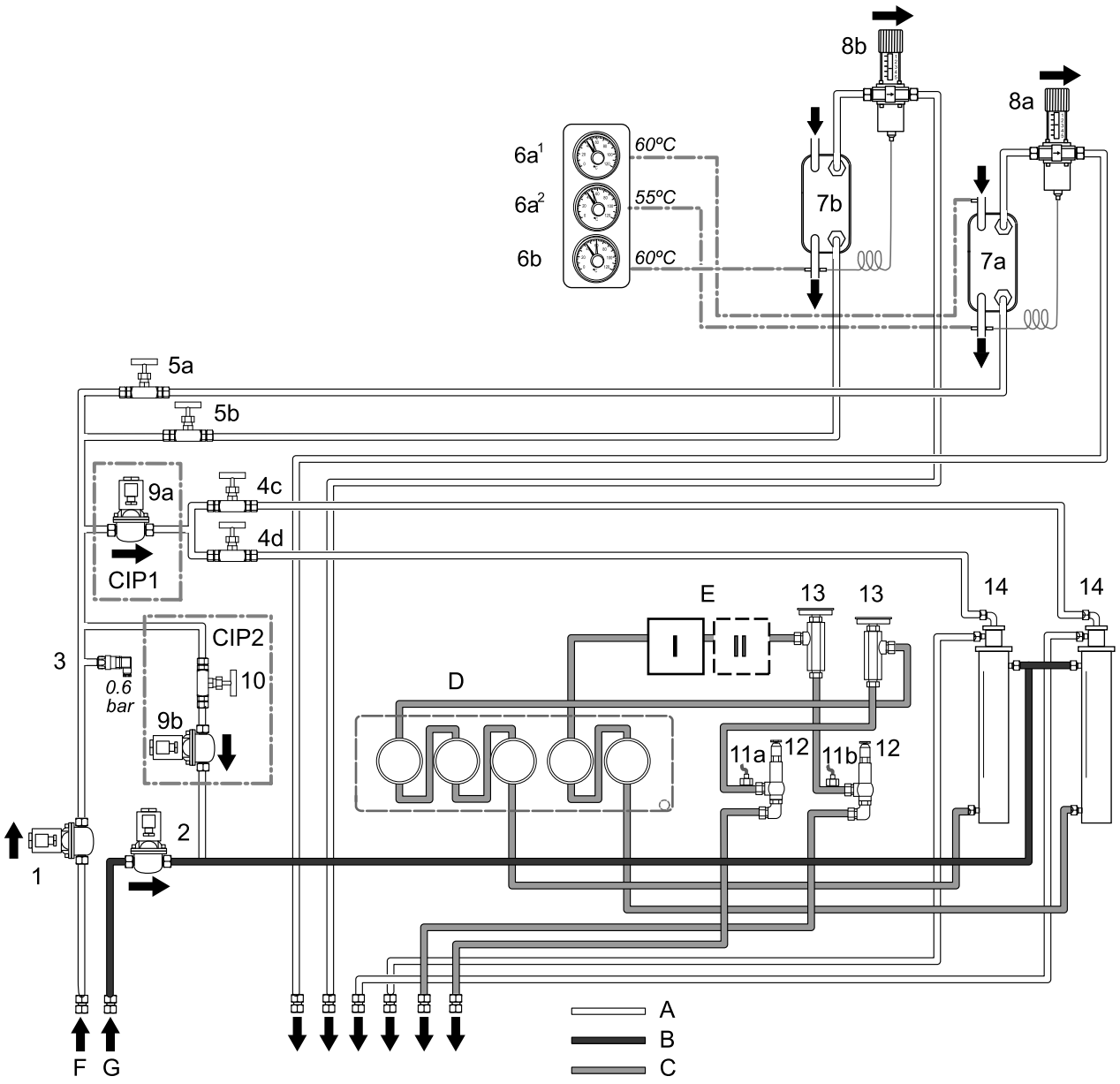

a = Crankcase circuit

b = Gearbox circuit

A	Cooling water
B	Steam
C	Condensate
D	Piston seals
E	Homogenizing head
F	Cooling water
G	Steam

(Cont'd)

(Cont'd)

Pos.	Pos. SPC drw	Description	Function
1	K/Q 810(Y/F 810)	Cooling water shut off valve	Solenoid, controlled by electrical signal (Pneumatic, controlled by compressed air as option)
2	K/Q 811 (Y/F 811)	Steam shut off valve	Solenoid, controlled by electrical signal (Pneumatic, controlled by compressed air as option)
3	BF 846 (B 846)	Flow / Pressure guard (Option)	Cooling water guard (NO). The guard is closed with cooling water on (P > 0.6 bar).
4c 4d	V 832 V 831	Regulating valve	Basic setting: Adjust flow through condenser to approx. 300 l/h (79 U.S. gallon/h) During running: Adjust condenser cooling water outlet temperature to 60 - max. 65°C (140 - 149°F)
5a	V 811	Regulating valve	Regulation of oil temperature (Open if the optional regulator (8) exists) Crankcase oil temperature: 50°C (122°F)
5b	V821	Regulating valve	Regulation of oil temperature (Open if the optional regulator (8) exists) Gearbox oil temperature: 55°C (131°F)
6a[1]	BT 815 (B 815)	Thermometer with alarm set point	Alarm point: 60°C (140°F) 'High machine temperature'
6a[2]	BT 841 (B 841)	Thermometer with alarm set point	Alarm point: 55°C (131°F) 'High oil temperature in crankcase'
6b	BT 842 (B 842)	Thermometer with alarm set point	Alarm point: 60°C (140°F) 'High oil temperature in gearbox'
7		Heat exchanger	Oil cooler, water as cooling media
8a	V 812	Regulator (Option)	Automatic control of oil temperature Crankcase oil temperature: 50°C (122°F)
8b	V 822	Regulator (Option)	Automatic control of oil temperature Gearbox oil temperature: 55°C (131°F)
9a 9b	K/Q 820 (Y/F 820) K/Q 821 (Y/F 821)	Steam shut off valve CIP 1 Steam shut off valve CIP 2	Solenoid, controlled by electrical signal (Pneumatic, controlled by compressed air as option)
10	V 833	Regulating valve	
11a 11b	BT 830 (B 830) BT 831 (B 831)	Temperature transmitter	Measures the condensate temperature
12		Condensate regulating valve	Automatic control of condensate temperature - 110°C (230°F)
13		Thermometer	Indicates condensate temperature
14		Condenser	Produces condensate for aseptic seal

2.3.1 Cooling Circuit - Valve Activation Chart

		Valve	**Sterilization / Production**	**CIP**
K/Q811 (Y/F811)	2	Steam inlet	open	closed
K/Q810 (Y/F810)	1	Cooling water inlet	open	open
K/Q820 (Y/F820)	9a	CIP 1	open	closed
K/Q821 (Y/F821)	9b	CIP 2	closed	open

2.3-1 Cooling Circuit - Check Piping

Check:

- all connections for leakage.

2.3-2 Cooling Circuit - Check Regulating Valves

Check:

- the function of the regulating valves.

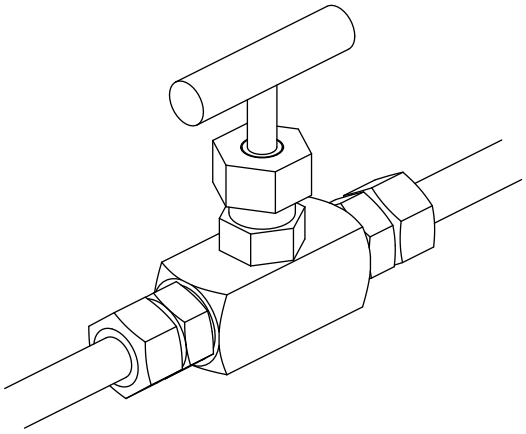

2.3-3 Cooling Circuit - Check Water Valve

Activate and de-activate the cooling water shut off valve and check its function.

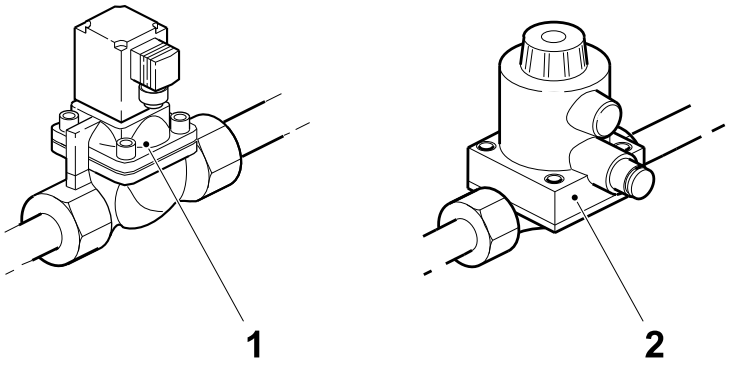

Pos.	Pos. SPC drw	Description
1	K 810 (Y 810)	Cooling water shut off valve, solenoid (standard)
2	Q 810 (F 810)	Cooling water shut off valve, pneumatic (optional)

2.3-4 Cooling Circuit - Check Cooling Water Regulator

Controls the crank case oil temperature.

Check function.

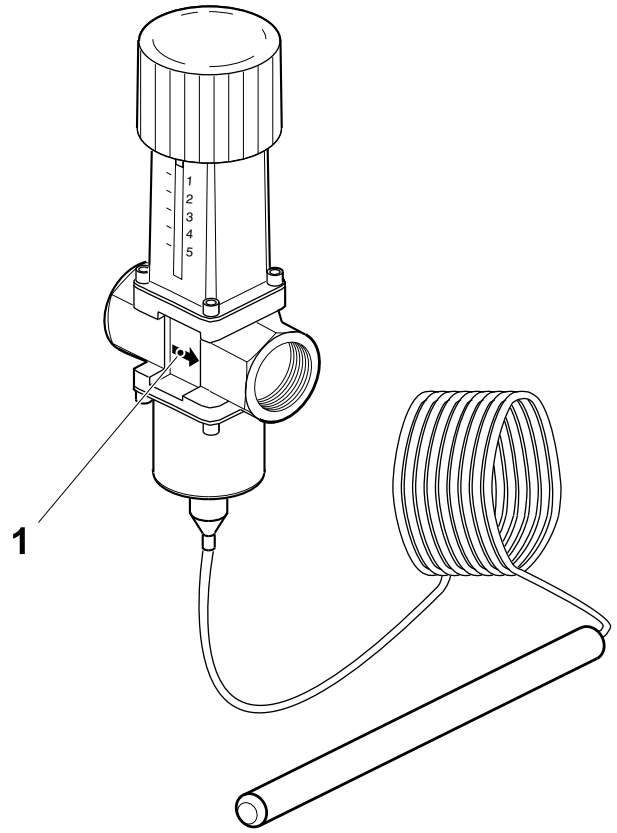

1 Flow direction

2.3-5 Cooling Circuit - Check Thermometer

Check:

- Thermometer:
  a) During running: approx. 110 °C (230 °F).
  b) At stand still: surrounding temperature.

Temperature transmitter, see 2.11.6 Temperature Transmitter on page 2-107.

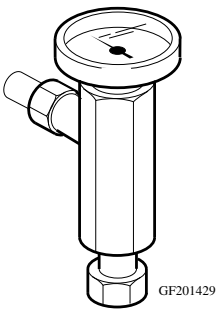

2.3-6 Cooling Circuit - Check Steam valve

Activate and de-activate the steam shut off valve and check its function.

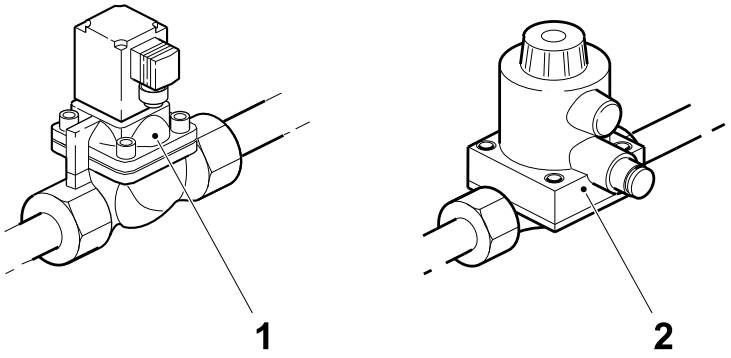

Pos.	Pos. SPC drw	Description
1	K 811 (Y 811)	Steam shut off valve, solenoid (standard)
2	Q 811 (F 811)	Steam shut off valve, pneumatic (optional)

2.3-7 Cooling Circuit - Delime Condenser

Remove, disassemble and delime the parts.

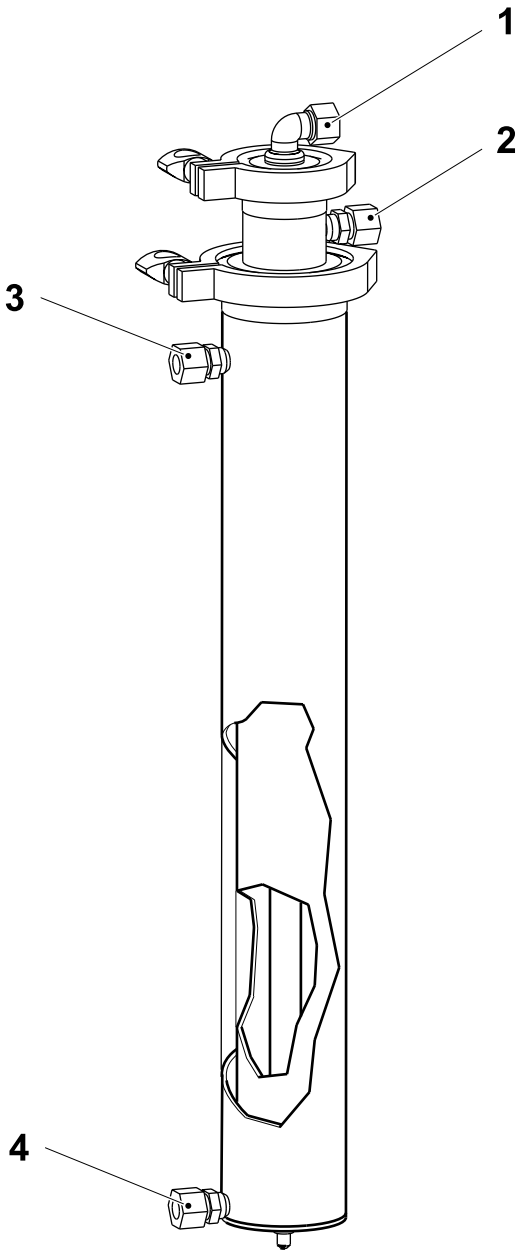

1 Cold water inlet
2 Hot water outlet
3 Steam inlet
4 Steam and condensate outlet

2.3-8 Cooling Circuit - Check Condensate Regulating Valve

a) Controls the condensate flow.

The valve is pre-set to achieve a condensate temperature of 110 °C (230 °F) after the aseptic seal.

b) Check the function.

If malfunction, do not adjust the regulating valve. Replace it.

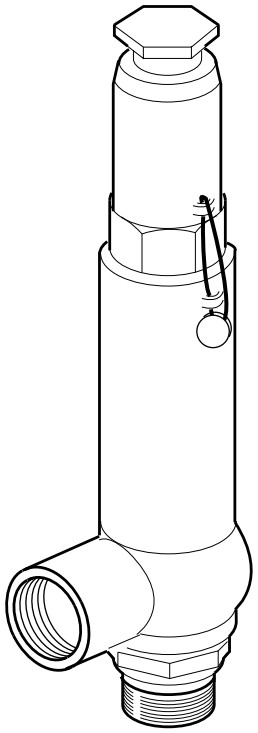

GF201436

2.4 Wet End

2.4.1 Piston Cartridge

2.4.1-1 Piston Cartridge - Check

a) Check:

- that no product leaks through the piston packing (4); check cooling water outlet for product in water
- that the piston packing (13) is not leaking water
- that the piston (14) and the compression ring (5) are not worn, see limits on next page.

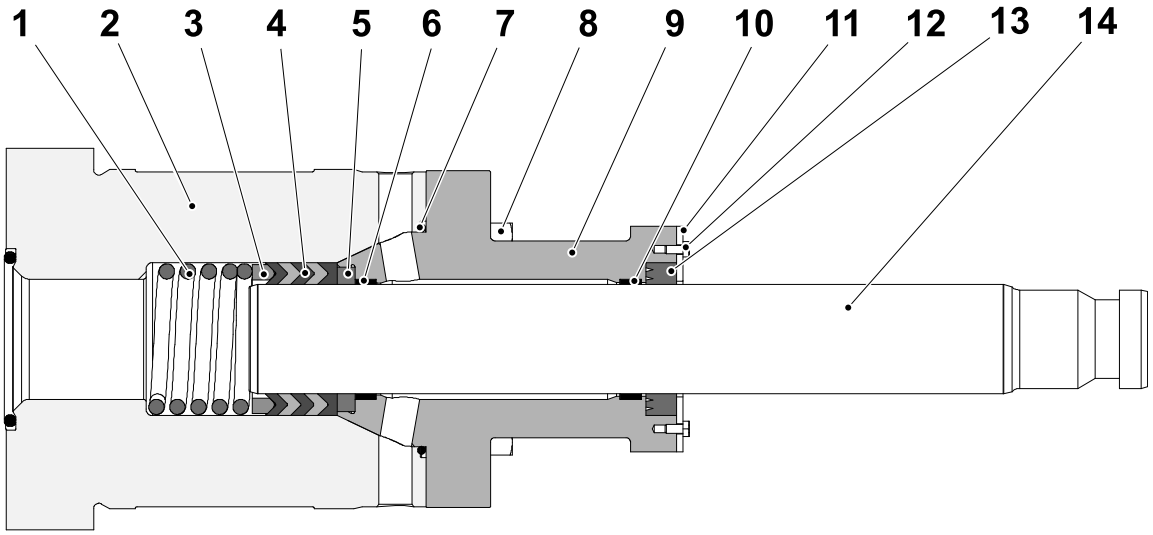

1 Spring, [6]
2 Cylinder bushing, [1]
3 Support ring, [10]
4 Piston packing, [11]
5 Compression ring, [13]
6 Guide band, [14]
7 O-ring, [18]
8 Screw, [8]
9 Piston bushing, [2]
10 Guide band, [14]
11 Lid, [3]
12 Screw, [7]
13 Piston packing, [12]
14 Piston, [9]

(Cont'd)

(Cont'd)

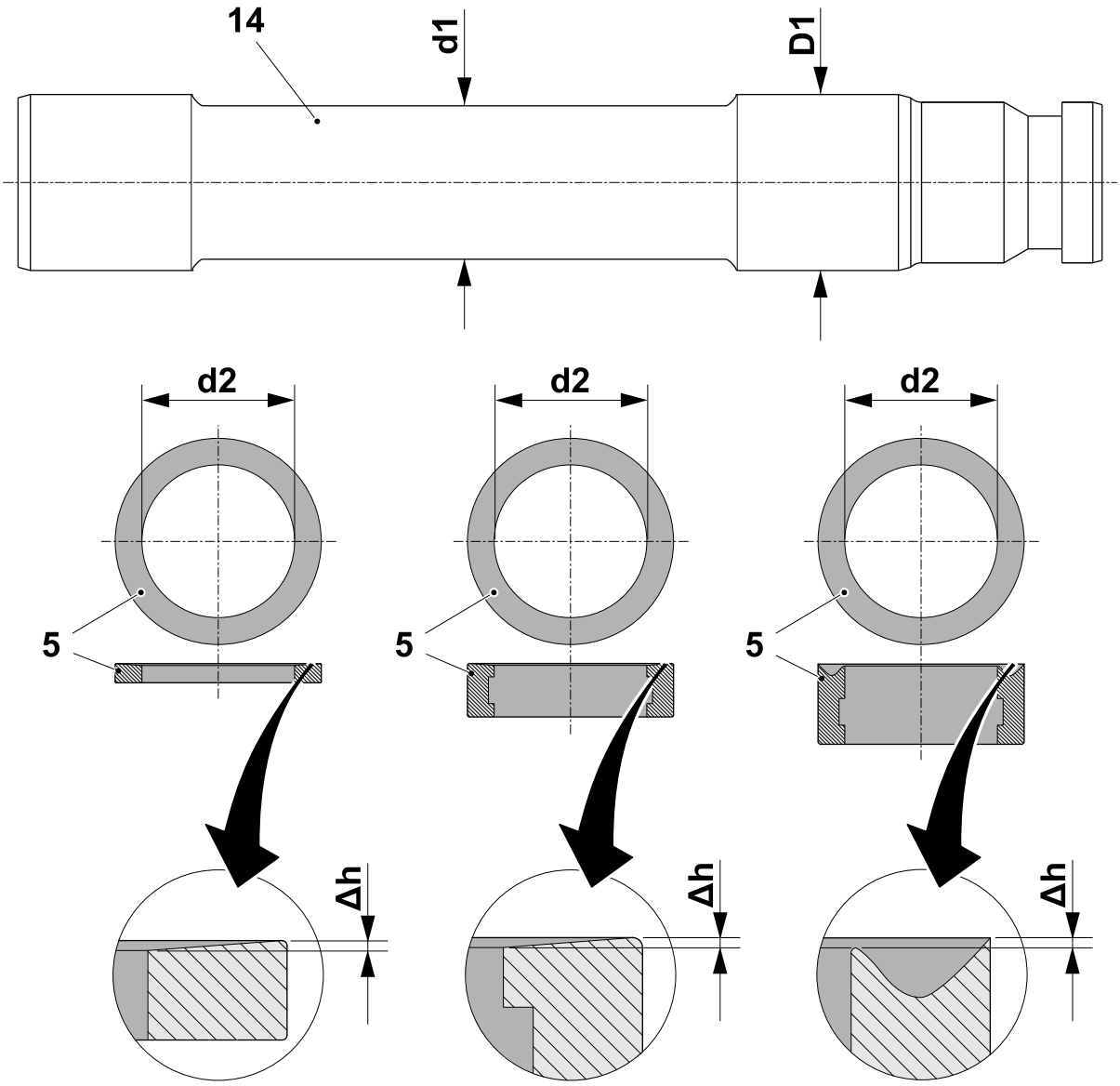

5 Compression ring, [13]

14 Piston, [9]

Piston limit	d1 ≥ D1 - 0.1 mm
Compression ring limit	d2 ≤ d1 + 0.5 mm
Compression ring wear limit	Δh = outer ring height - inner ring height ≤ 0.1 mm

2.4.1-2 Piston Cartridge - Remove

a) Remove the piston connection according to 2.2-7 Crank Case - Set Connections on page 2-24.

b) Remove the screws (8) from the piston bushing (9).

c) Pull gently out the piston bushing (9) with the piston (14).

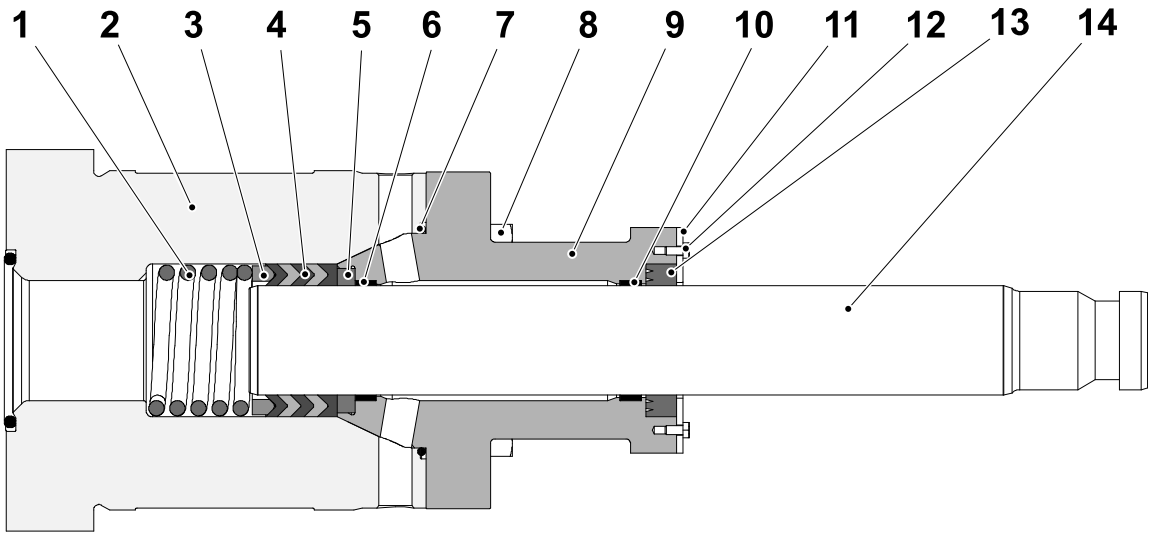

1 Spring, [6]
2 Cylinder bushing, [1]
3 Support ring, [10]
4 Piston packing, [11]
5 Compression ring, [13]
6 Guide band, [14]
7 O-ring, [18]
8 Screw, [8]
9 Piston bushing, [2]
10 Guide band, [14]
11 Lid, [3]
12 Screw, [7]
13 Piston packing, [12]
14 Piston, [9]

2.4.1-3 Piston Cartridge - Disassemble

Remove:

a) the piston (12)

b) the lid (11)

c) the spring (2)

d) the support ring (3)

e) the piston packing (4)

f) the compression ring (5)

g) the guide band (6)

h) the o-ring (7)

i) the piston packing (10)

j) the guide band (9)

k) the piston bushing (8)

from the cylinder bushing (1).

(Cont'd)

(Cont'd)

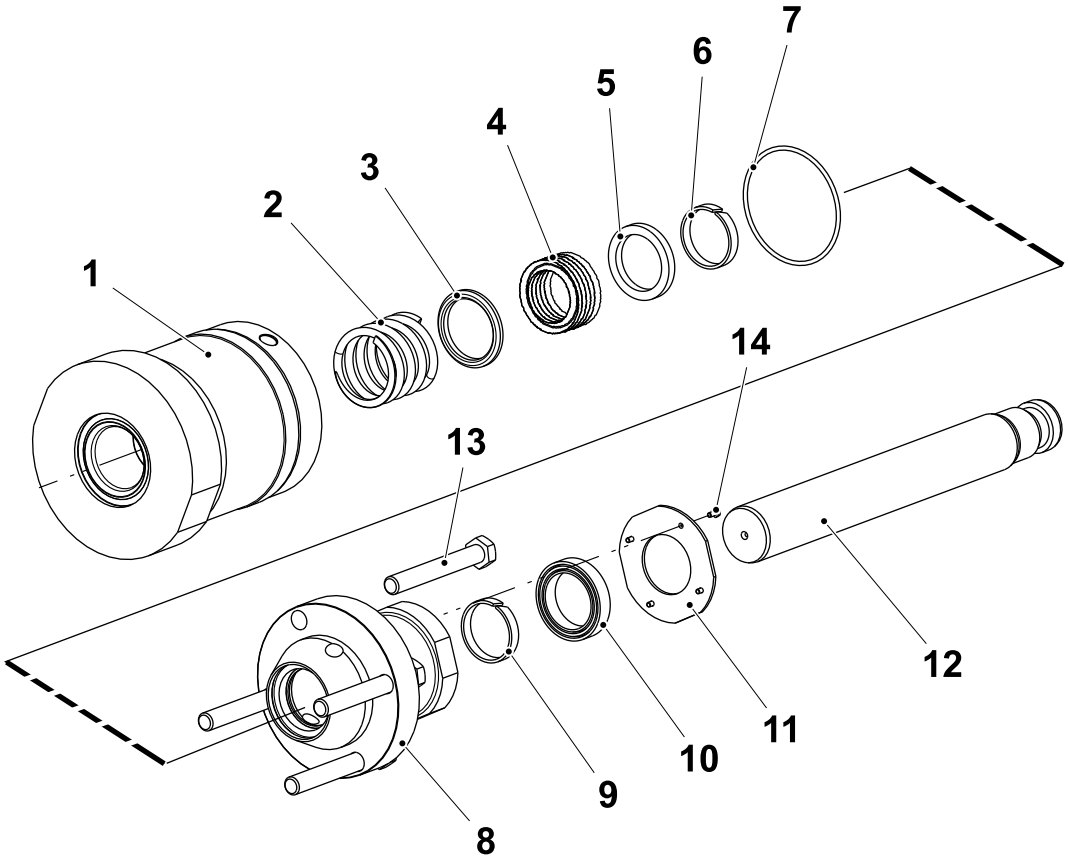

1 Cylinder bushing, [1]
2 Spring, [6]
3 Support ring, [10]
4 Piston packing, [11]
5 Compression ring, [13]
6 Guide band, [14]
7 O-ring, [18]
8 Piston bushing, [2]
9 Guide band, [14]
10 Piston packing, [12]
11 Lid, [3]
12 Piston, [9]
13 Screw, [8]
14 Screw, [7]

2.4.1-4 Piston Cartridge - Assemble

a) Apply silicone grease on the inner surface of the piston packing (4) as well as on the inner surface of guide band (6) and guide band (10) , to ensure minimum wear.

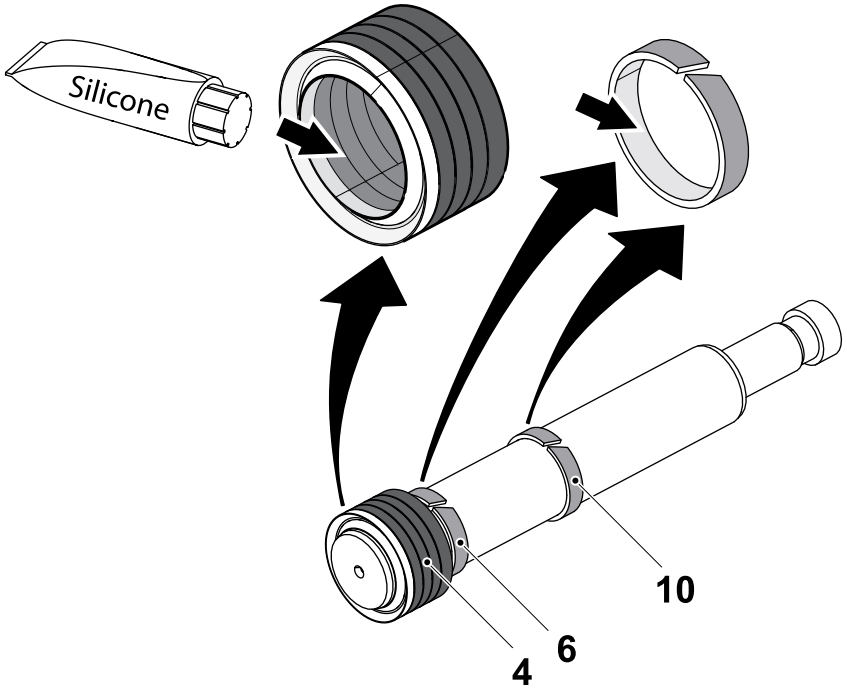

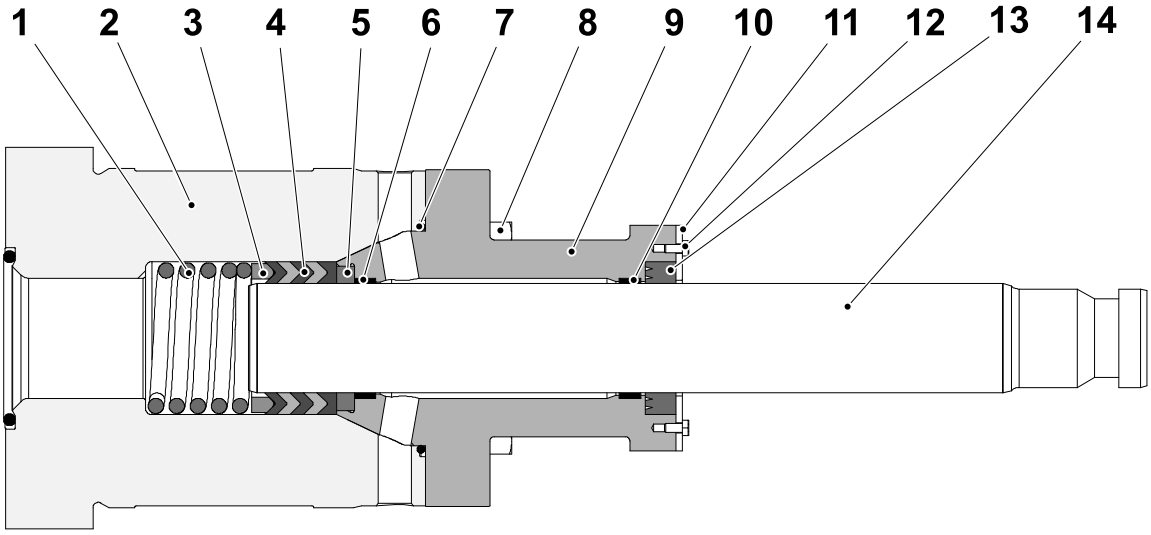

1 Spring, [6]
2 Cylinder bushing, [1]
3 Support ring, [10]
4 Piston packing, [11]
5 Compression ring, [13]
6 Guide band, [14]
7 O-ring, [18]
8 Screw, [8]
9 Piston bushing, [2]
10 Guide band, [14]
11 Lid, [3]
12 Screw, [7]
13 Piston packing, [12]
14 Piston, [9]

(Cont'd)

(Cont'd)

b) Assemble the parts in reverse order according to 2.4.1-3 Piston Cartridge - Disassemble on page 2-40.

c) Tighten the screws (8) for the piston bushing with a torque wrench.

See 2.12.3 Torque Specifications on page 2-115.

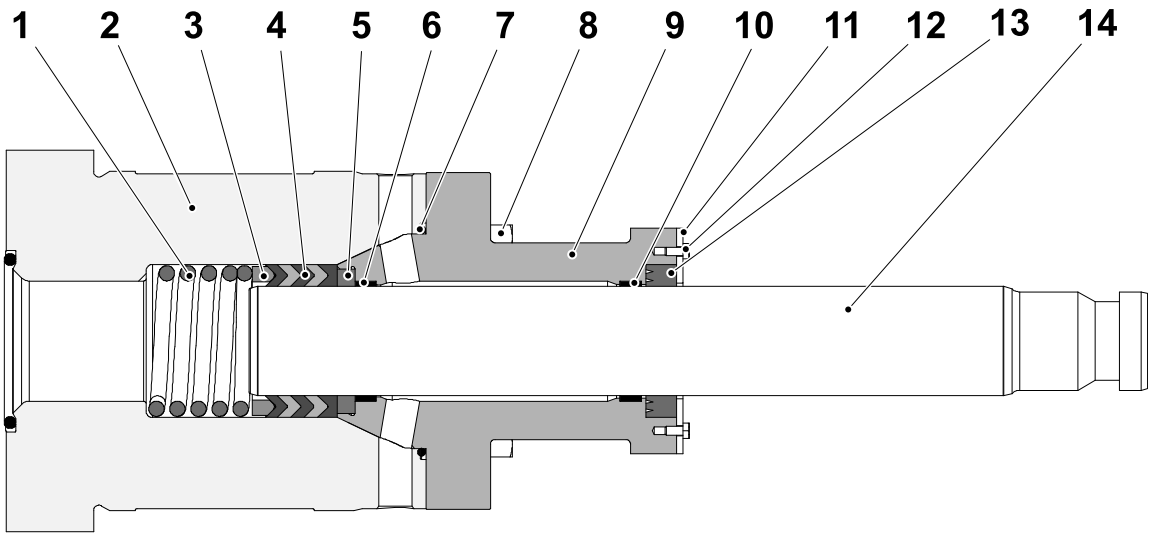

1 Spring, [6]
2 Cylinder bushing, [1]
3 Support ring, [10]
4 Piston packing, [11]
5 Compression ring, [13]
6 Guide band, [14]
7 O-ring, [18]
8 Screw, [8]
9 Piston bushing, [2]
10 Guide band, [14]
11 Lid, [3]
12 Screw, [7]
13 Piston packing, [12]
14 Piston, [9]

2.4.1-5 Piston Cartridge- Change Piston

a) Replace the piston and assemble the piston cartridge according to 2.4.1-4 Piston Cartridge - Assemble on page 2-42.

2.4.1-6 Piston Cartridge - Change Piston Packing

a) Replace:

- the piston packing (4) and piston packing (13)
- the guide band (6) and guide band (10)
- the o-ring (7)

b) Assemble the piston unit according to 2.4.1-4 Piston Cartridge - Assemble on page 2-42.

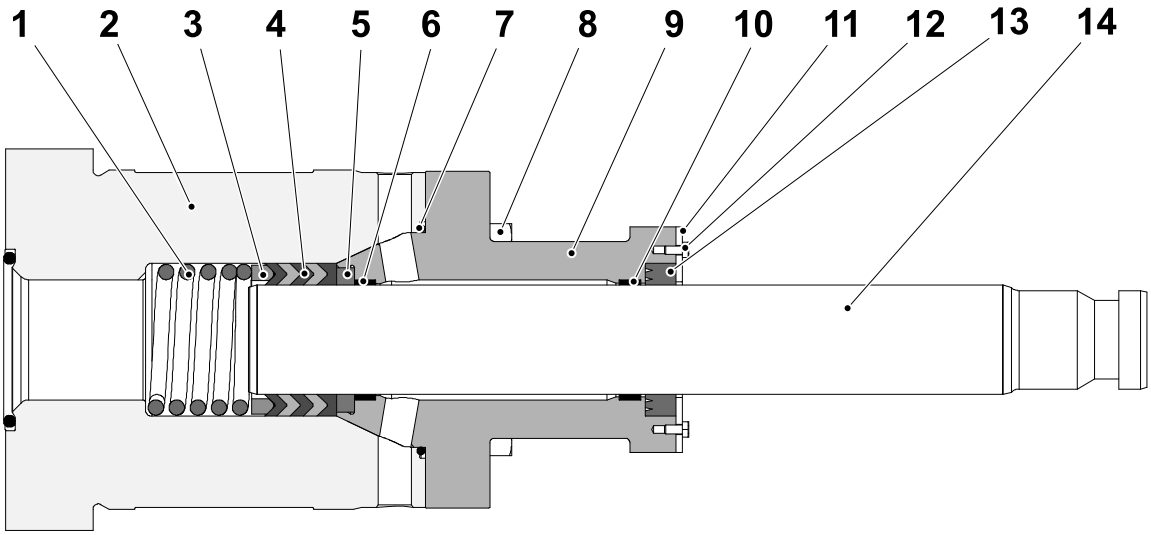

1 Spring, [6]
2 Cylinder bushing, [1]
3 Support ring, [10]
4 Piston packing, [11]
5 Compression ring, [13]
6 Guide band, [14]
7 O-ring, [18]
8 Screw, [8]
9 Piston bushing, [2]
10 Guide band, [14]
11 Lid, [3]
12 Screw, [7]
13 Piston packing, [12]
14 Piston, [9]

2.4.2 Valve Cartridge

Consumables	Silicone grease TP No. 90296-9

Tools used for disassembly and assembly.

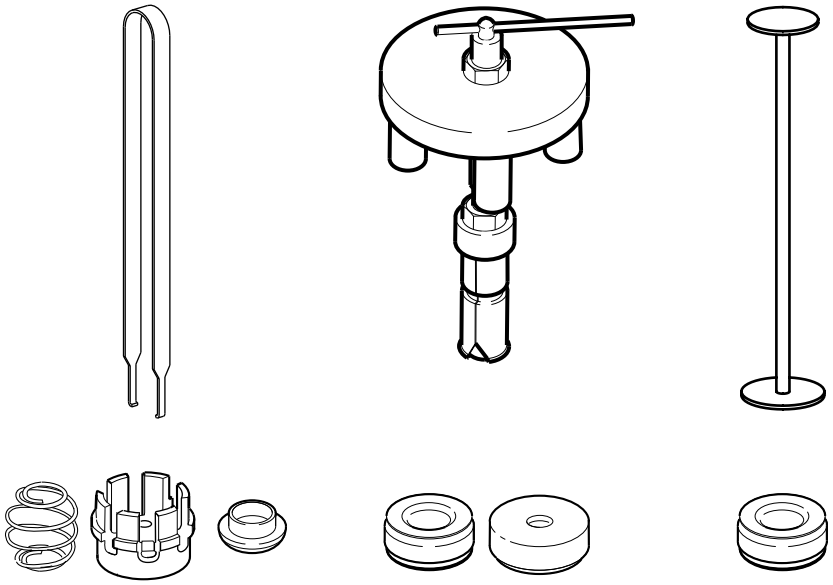

2.4.2-1 Valve Cartridge - Remove

Use the tools on page 2-45, when removing the different parts.

Note! Keep the parts from each valve together. Do not mix the valve and valve seats from different valves!

Note! Be careful not to drop any parts when disassembling, in order to avoid damages on critical surfaces as valve seats etc.

a) Remove the valve cover (13) and lift up the valve parts.

b) Remove the valve cage (9).

c) Remove the valve spring (8).

d) Remove the disc valve (7).

e) Remove the valve seat (4).

(Cont'd)

(Cont'd)

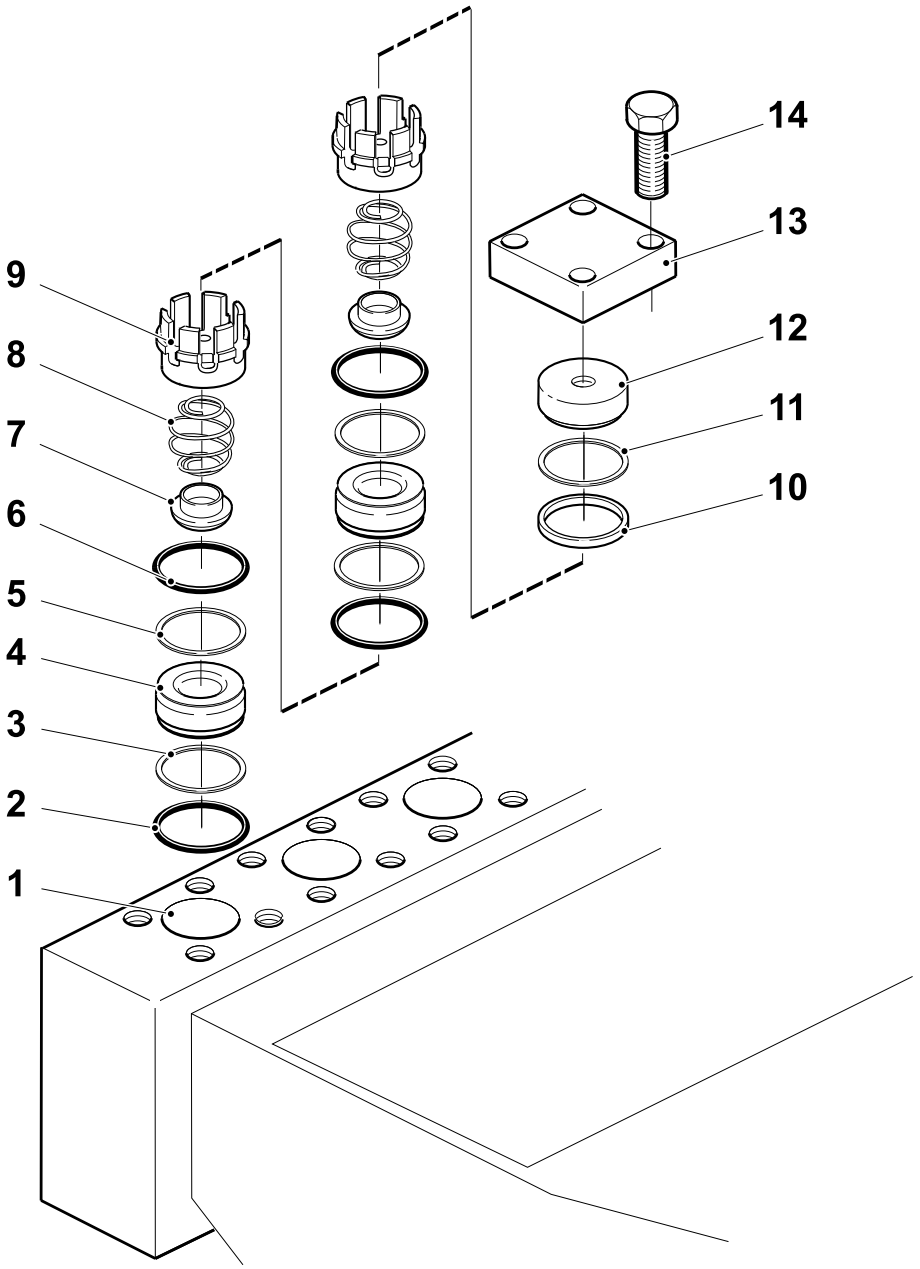

1 Cylinder
2 O-ring, [27]
3 Support ring, [58]
4 Valve seat, [24]
5 Support ring, [58]
6 O-ring, [27]
7 Disc valve, [23]
8 Valve spring, [25]
9 Valve cage, [26]
10 O-ring, [27]
11 Support ring, [58]
12 Spacer, [59]
13 Valve cover, [29]
14 Screw, [32]

2.4.2-2 Valve Cartridge - Assemble

Note! Keep the parts from each valve together. Do not mix the disc valves and valve seats from different valves!

Note! Be careful not to drop any parts when assembling in order to avoid damages on critical surfaces as valve seats etc.

Apply silicone grease on the seals before assembling the valves.

Assemble the parts in reverse order to disassembly.

a) Use the tool (1) to fit the two pre-assembled units, each containing a valve cage (3), valve spring (4), valve (5) and a valve seat (6).

Note! Make sure that the spring is correctly fitted to the valve cage and valve as illustrated.

b) Tighten the screw (2) for the valve covers with a torque wrench.

See 2.12.3 Torque Specifications on page 2-115.

(Cont'd)

(Cont'd)

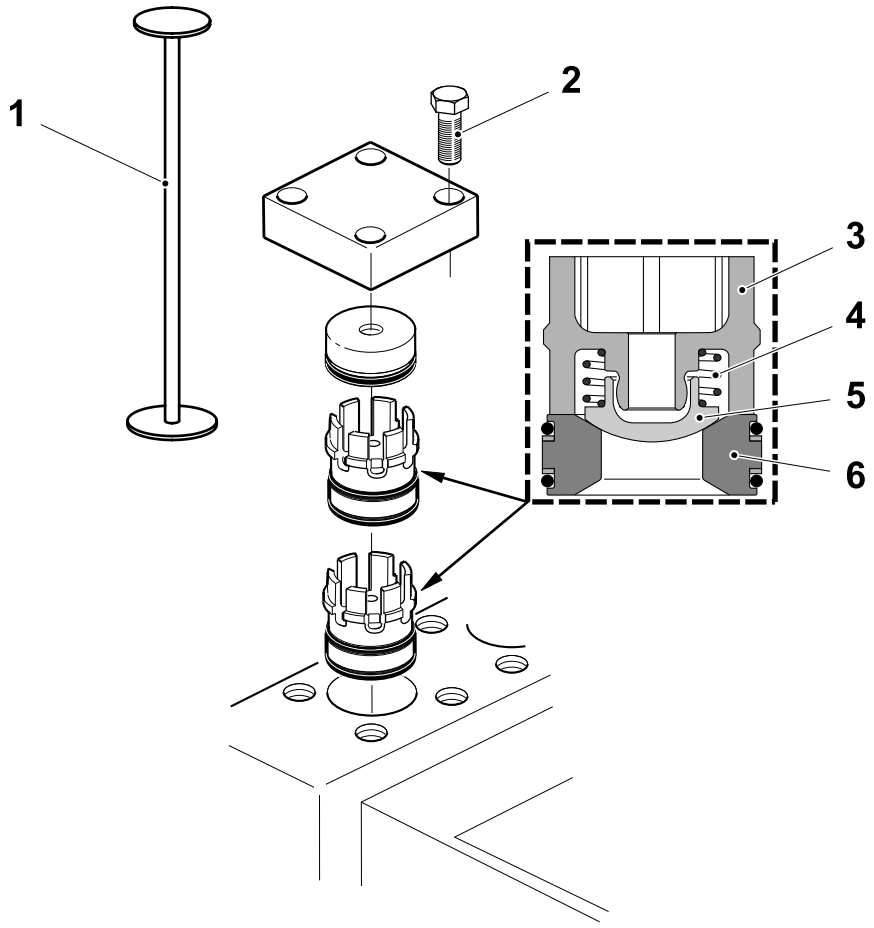

1 Tool
2 Screw, [32]
3 Valve cage, [26]
4 Valve spring, [25]
5 Valve, [23]
6 Valve seat, [24]

2.4.2-3 Valve Cartridge - Check

The valves must be removed, see 2.4.2-1 Valve Cartridge - Remove on page 2-45.

Check the wear pattern on the contact surfaces for the valve and the seat.

Normal wear pattern

No action is required.

The normal wear pattern on valve contact surfaces shows a dull metallic finish. After approximately 100 hours of operation the contact surface will show a slight wear mark on its entire circumferences. This polished impression is quite normal.

(Cont'd)

(Cont'd)

Pitting formation

Replace valve and seat. The seat can be turned once.

Pittings are hammered by solids contained in the product to be homogenized. They are the cause of "blow through marks" in the valve and the seat.

Blow through marks in valve and seat

Replace valve and seat. The seat can be turned once.

Product deposits on sporadic spots of the valve contact surface have prevented the valve from seating properly. The product has "blown through" and eroded the valve and seat across the entire width of the contact surfaces.

Note! Failure of carrying out regular checks and maintenance will cause damage of this nature.

The valve contact surface deformed

Replace the valve and seat. The seat can be turned once.

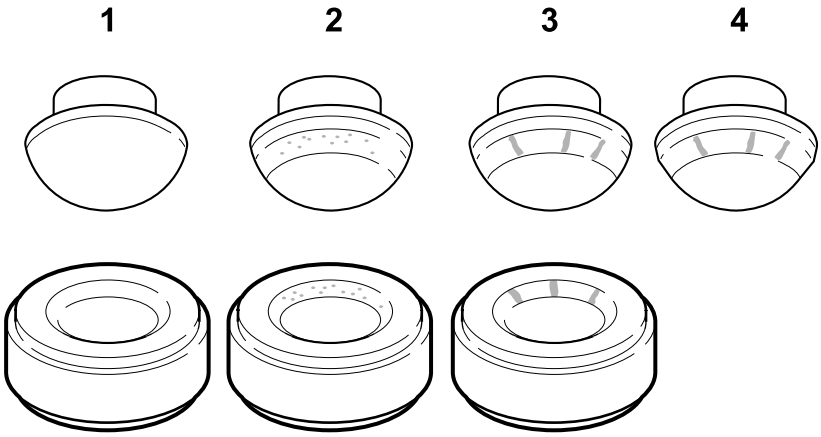

1 Normal wear pattern
2 Pitting formation
3 Blow through marks in valve and seat
4 Valve contact surface deformed

2.4.2-4 Valve Cartridge - Change Valve Seals

The valves must be removed, see 2.4.2-1 Valve Cartridge - Remove on page 2-45.

Clean the grooves in the valve seat (1) before putting on the new support ring (3) and the o-ring (2).

Note! Make sure that the direction of the o-ring is as illustrated.

(Cont'd)

(Cont'd)

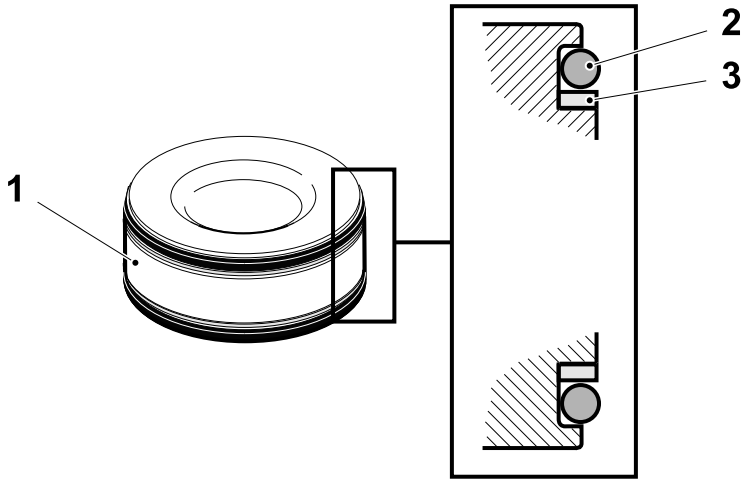

1 Valve seat, [24]
2 O-ring, [27]
3 Support ring, [58]

2.5 Homogenization Head

2.5-1 Homogenization Head - Check

a) Check if the homogenizing pressure is achieved. If not, loosen the hydraulic cylinder vent plug (3) and vent the hydraulic system.

b) Check that no product leaks through the product drain hole (2). If leakage, the seat and forcer have to be checked, see 2.5-6 Homogenization Head - Check Seat on page 2-56 and2.5-8 Homogenization Head - Check Forcer on page 2-58.

c) Check that no oil leaks through the oil drain hole (1).

If leakage, see 2.5-10 Homogenization Head - Change Hydraulic Cylinder Seals on page 2-59.

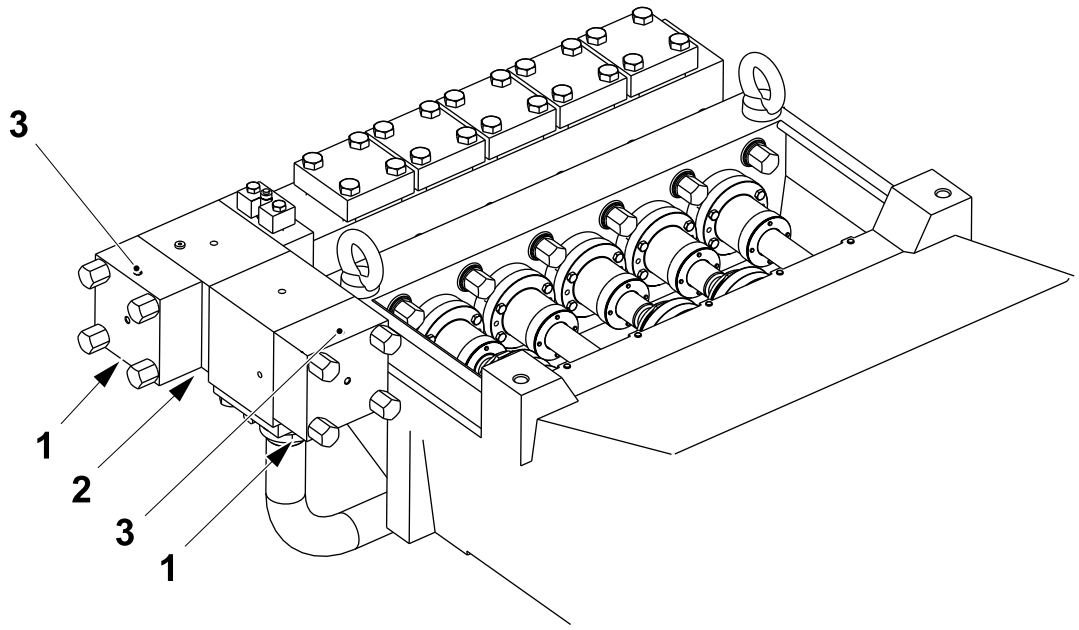

1 Oil drain hole
2 Product drain hole
3 Hydraulic cylinder vent plug
4 Homogenization head
5 Relief valve

2.5-2 Homogenization Head - Remove

Remove the:

a) product pipe

b) pipe connection (8)

c) hydraulic cylinder (6)

d) housing (5)

e) hydraulic cylinder (3)

f) housing (4)

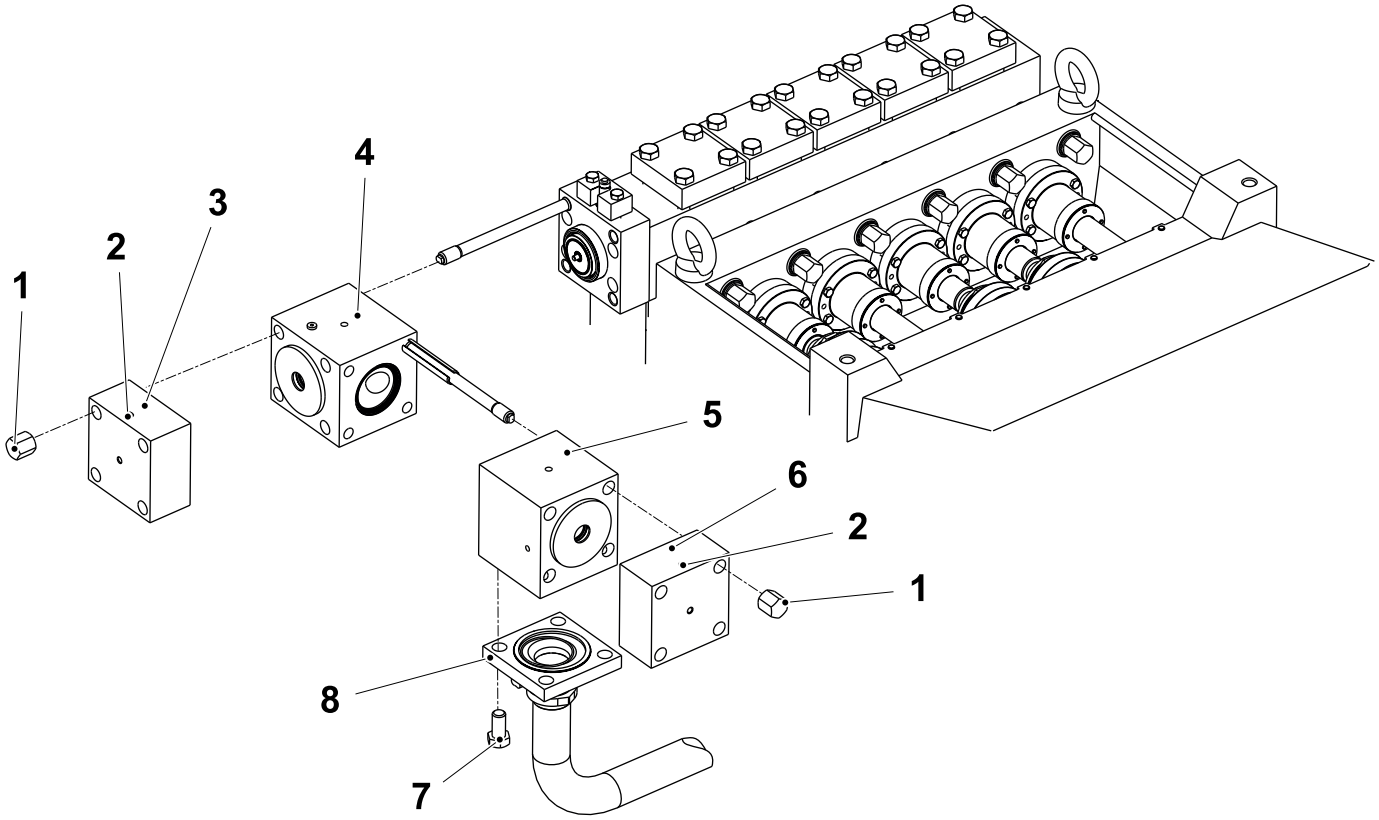

1 Nut, [4]
2 Vent plug, [10]
3 Hydraulic cylinder, [1]
4 Housing, [30]
5 Housing, [35]
6 Hydraulic cylinder, [1]
7 Screw, [72]
8 Pipe connection, [15]

2.5-3 Homogenization Head - Assemble

Consumables	Silicone grease TP No. 90296-9

a) Replace all the o-rings and support rings. Rub the parts with silicone grease before assembly.

b) Fit the parts in reverse order to disassembly.

Note! Make sure that the vent plugs (2) are heading upwards.

c) Tighten the nuts (1) and the screws (7) with a torque wrench. See 2.12.3 Torque Specifications on page 2-115.

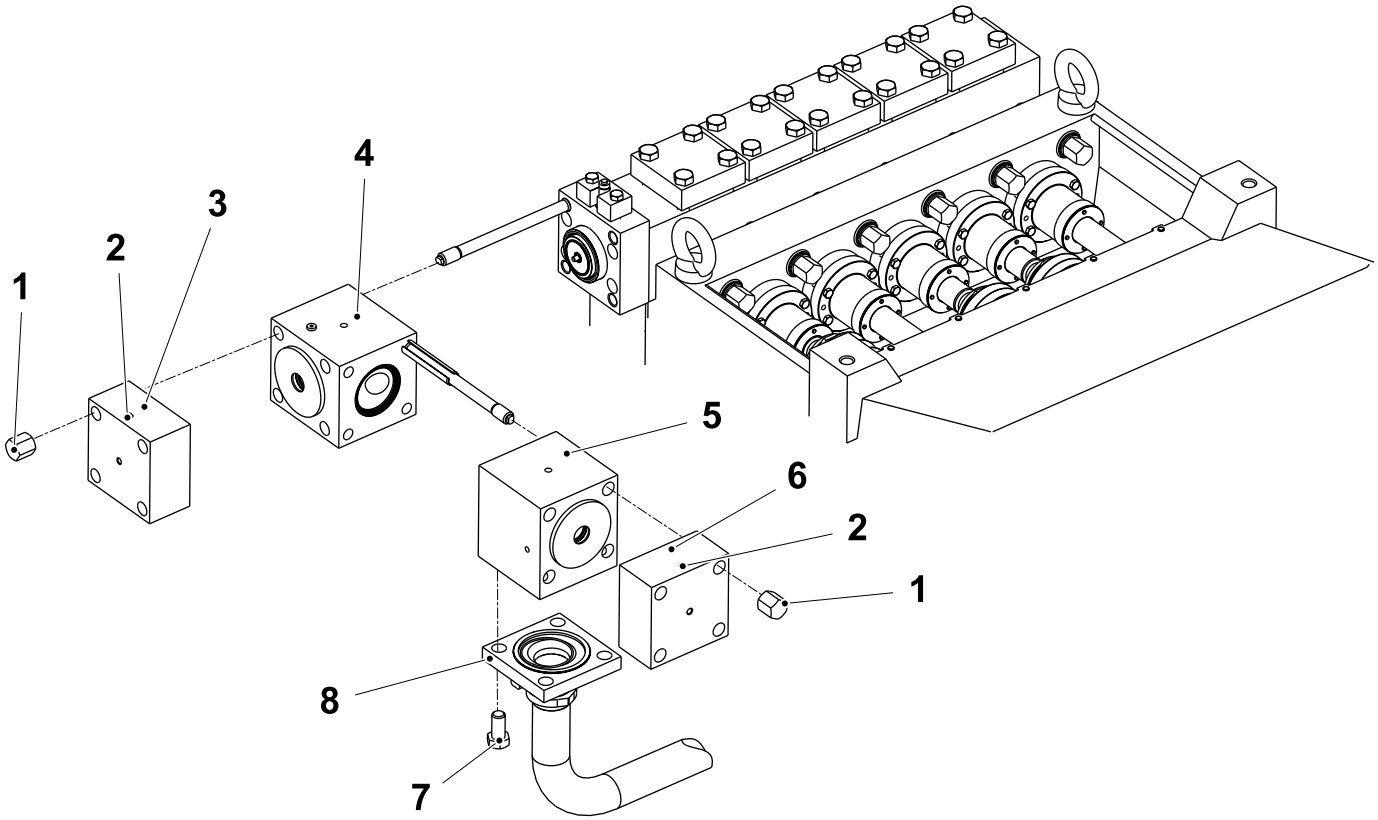

1 Nut, [4]
2 Vent plug, [10]
3 Hydraulic cylinder, [1]
4 Housing, [30]
5 Housing, [35]
6 Hydraulic cylinder, [1]
7 Screw, [72]
8 Pipe connection, [15]

2.5-4 Homogenization Device - Disassemble Housing

Remove:

- the o-ring (3) and the support ring (4)
- the o-ring (16) and the support ring (17)
- the seat (5)
- the o-ring (6)
- the forcer shaft (9)
- the o-ring (8)
- the guide band (12)
- the o-ring (14)
- the guide band (15)

Remove the o-ring (10) and the support ring (11) from the forcer.

Forcer, see 2.5-8 Homogenization Head - Check Forcer on page 2-58.

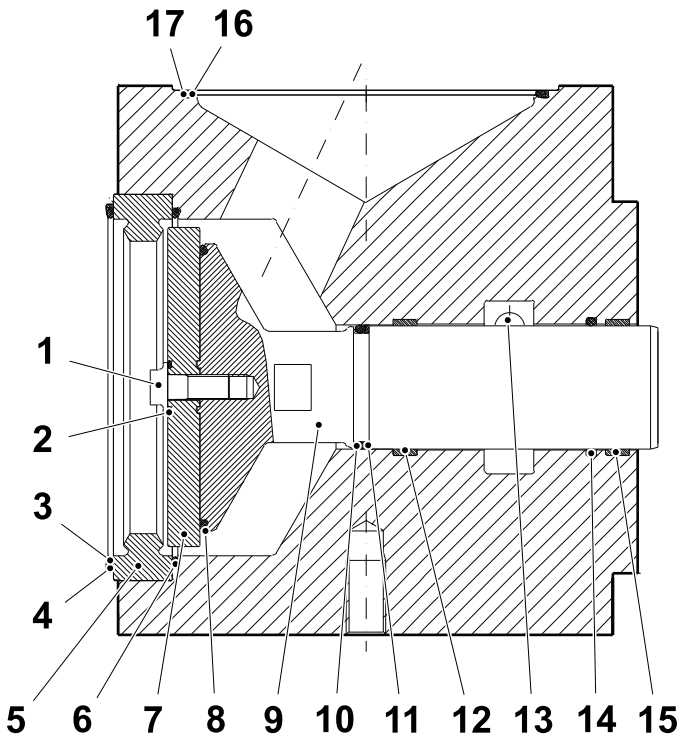

1 Screw, [7]
2 O-ring, [9]
3 O-ring, [22]
4 Support ring, [28]
5 Seat, [18]
6 O-ring, [22]
7 Forcer disc, [17]
8 O-ring, [13]
9 Forcer shaft, [2]
10 O-ring, [21]
11 Support ring, [24]
12 Guide band, [28]
13 Product drain hole
14 O-ring, [27]
15 Guide band, [8]
16 O-ring, [22]
17 Support ring, [28]

2.5-5 Homogenization Device - Assemble Housing

Locking compound	TP No. 90157-16
Force to open	3 N/mm^2
Temperature	-20 to +150°C -4 to +302°F

a) Rub the parts with silicone grease before assembly.

b) Replace O-rings, support rings and guide bands.

c) Apply some locking compound (18) of medium strength on the threads for the screw (1). Tighten the screw hard enough to get metallic contact between the forcer disc (7) and the forcer shaft (9).

d) Assemble in reverse order to activity 2.5-4 Homogenization Device - Disassemble Housing on page 2-54.

e) Install the homogenization device according to 2.5-3 Homogenization Head - Assemble on page 2-53.

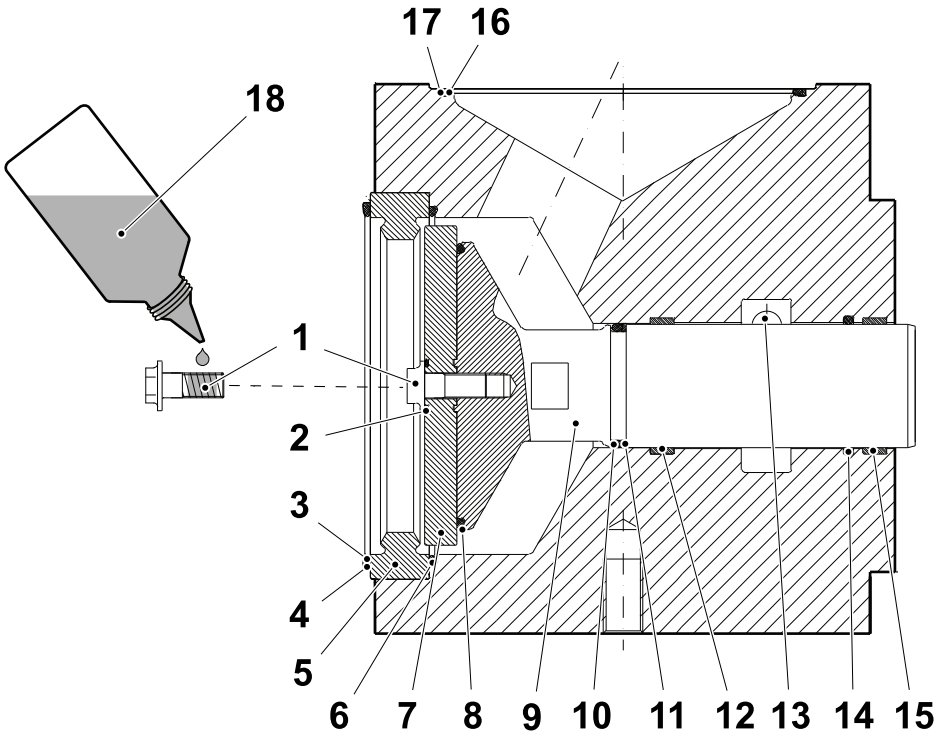

1 Screw, [7]
2 O-ring, [9]
3 O-ring, [22]
4 Support ring, [28]
5 Seat, [18]
6 O-ring, [22]
7 Forcer disc, [17]
8 O-ring, [13]
9 Forcer shaft, [2]
10 O-ring, [21]
11 Support ring, [24]
12 Guide band, [28]
13 Product drain hole
14 O-ring, [27]
15 Guide band, [8]
16 O-ring, [22]
17 Support ring, [28]
18 Locking compound

2.5-6 Homogenization Head - Check Seat

It is important that the relation between the product pressure and hydraulic pressure is unchanged compared to when the parts are new. Should this relation change, a possible cause is worn parts, see below.

a) Check the condition of the seat.

b) Assemble according to activity 2.5-5 Homogenization Device - Assemble Housing on page 2-55.

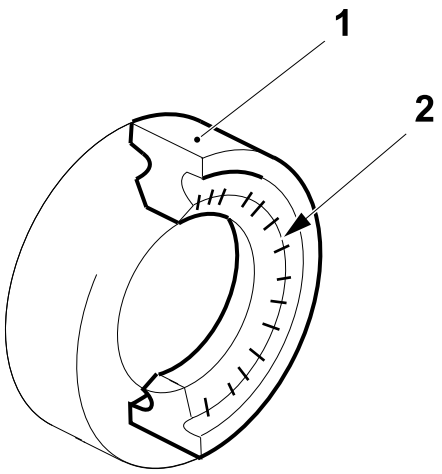

1 Seat
2 Example of deep cavities

2.5-7 Homogenization Head - Turn/Change Seat

a) The seat is symmetrical and its life time can be doubled by turning it.

Turn or replace the seat.

b) Assemble according to activity 2.5-5 Homogenization Device - Assemble Housing on page 2-55.

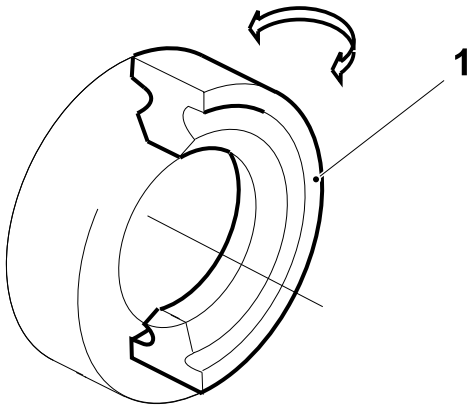

1 Seat

2.5-8 Homogenization Head - Check Forcer

It is important that the relation between the product pressure and hydraulic pressure is unchanged compared to when the parts are new. Should this relation change, a possible cause is worn parts, see below.

Check the condition of the forcer.

a) Assemble according to activity 2.5-5 Homogenization Device - Assemble Housing on page 2-55.

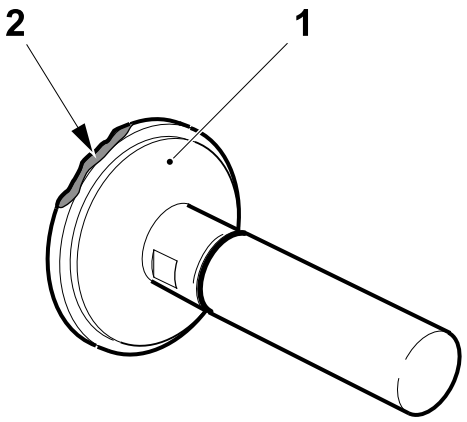

1 Forcer disc
2 Example of deep cavities

2.5-9 Homogenization Head - Turn/Change Forcer Disc

Locking compound	TP No. 90157-16
Force to open	3 N/mm^2
Temperature	-20 to +150°C -4 to +302°F

(Cont'd)

(Cont'd)

a) The forcer disc (3) is symmetrical and its life time can be doubled by turning it.

Turn or replace the forcer disc (3).

b) Apply some locking compound (6) of medium strength on the threads for the screw (1). Tighten the screw hard enough to get metallic contact between the forcer disc (3) and the forcer shaft (5).

c) Assemble according to activity 2.5-5 Homogenization Device - Assemble Housing on page 2-55.

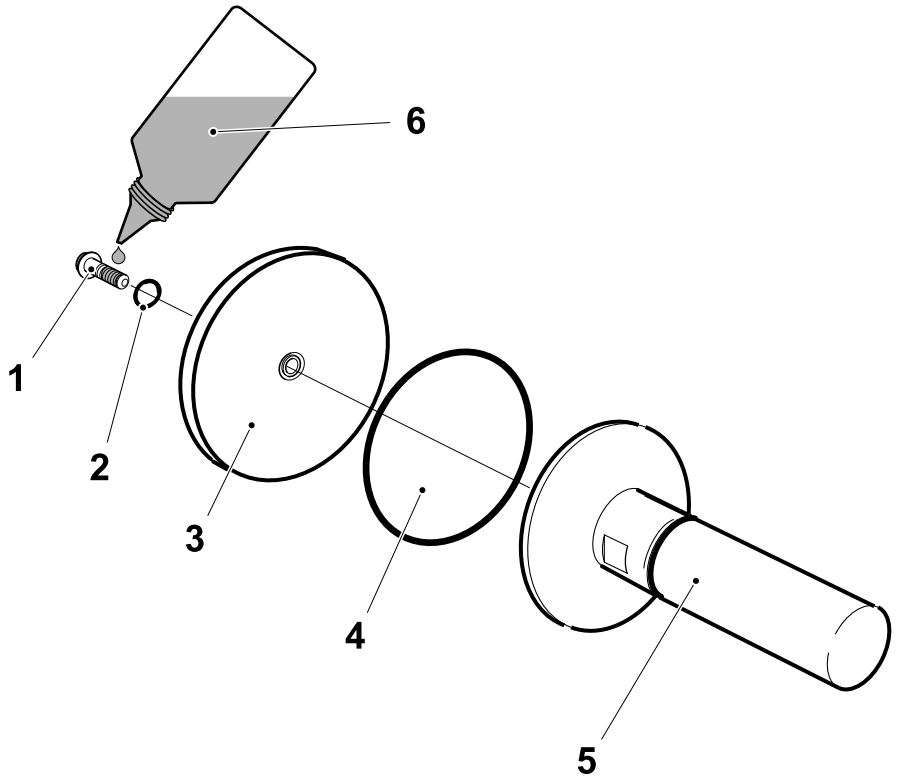

1 Screw, [7]
2 O-ring, [9]
3 Forcer disc, [17]
4 O-ring, [13]
5 Forcer shaft, [2]
6 Locking compound

2.5-10 Homogenization Head - Change Hydraulic Cylinder Seals

Consumables	Silicone grease: See SPC (Tools)

a) Remove the hydraulic cylinders according to activity 2.5-2 Homogenization Head - Remove on page 2-52.

(Cont'd)

(Cont'd)

b) Replace the guide bands (1), the o-ring (3) and the support ring (2).

c) Apply some silicone grease to the parts, and fit the guide bands and the O-ring by hand.

d) Tighten the nuts (5) with a torque wrench. See 2.12.3 Torque Specifications on page 2-115.

e) Vent the hydraulic system by help of the vent plug (4).

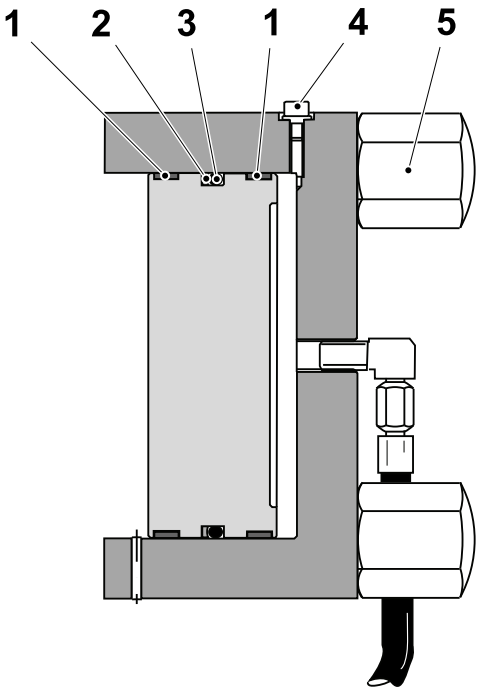

1 Guide band, [8]
2 Support ring, [29]
3 O-ring, [6]
4 Vent plug, [10]
5 Nut, [4]

2.5.1 Flange Manometer

2.5.1-1 Flange Manometer - Check Pressure Gauge

Check that the relation between the homogenizing pressure and the hydraulic pressure corresponds to the test protocol.

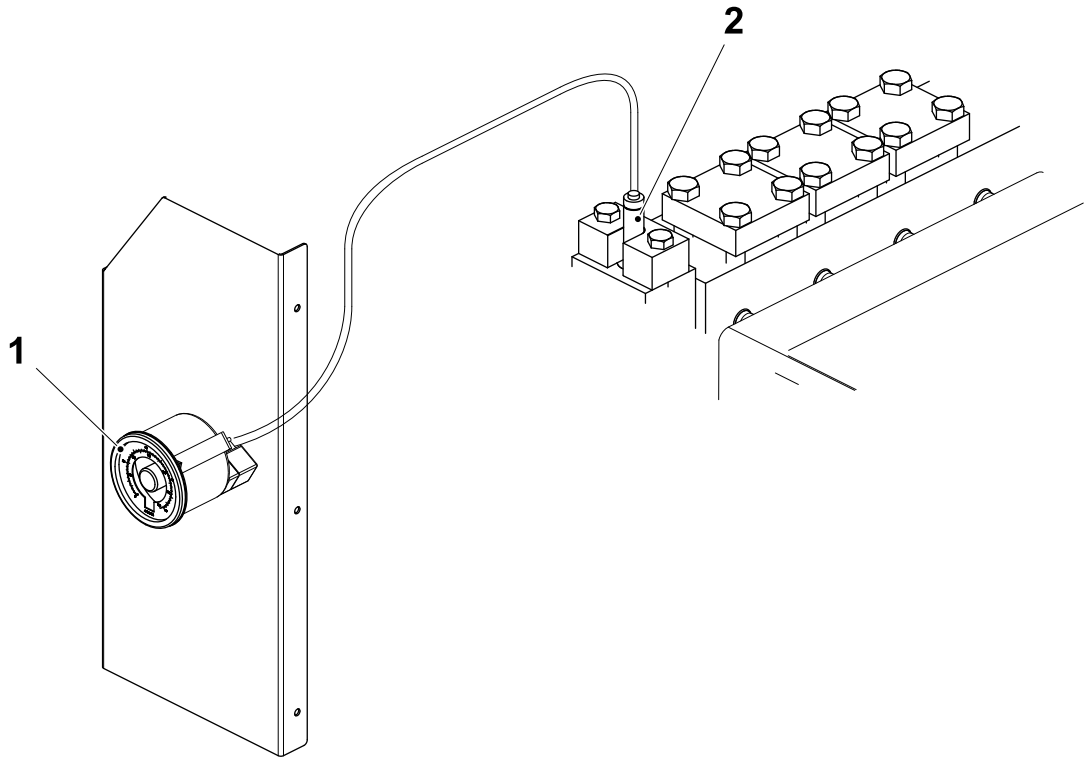

1 Hydraulic pressure gauge, [49]
2 Pressure gauge, [49]

2.5.1-2 Flange Manometer - Change Pressure Gauge O-ring

a) Remove the screws (5) and change the o-ring (4).

b) Tighten the screws with a torque wrench. See 2.12.3 Torque Specifications on page 2-115.

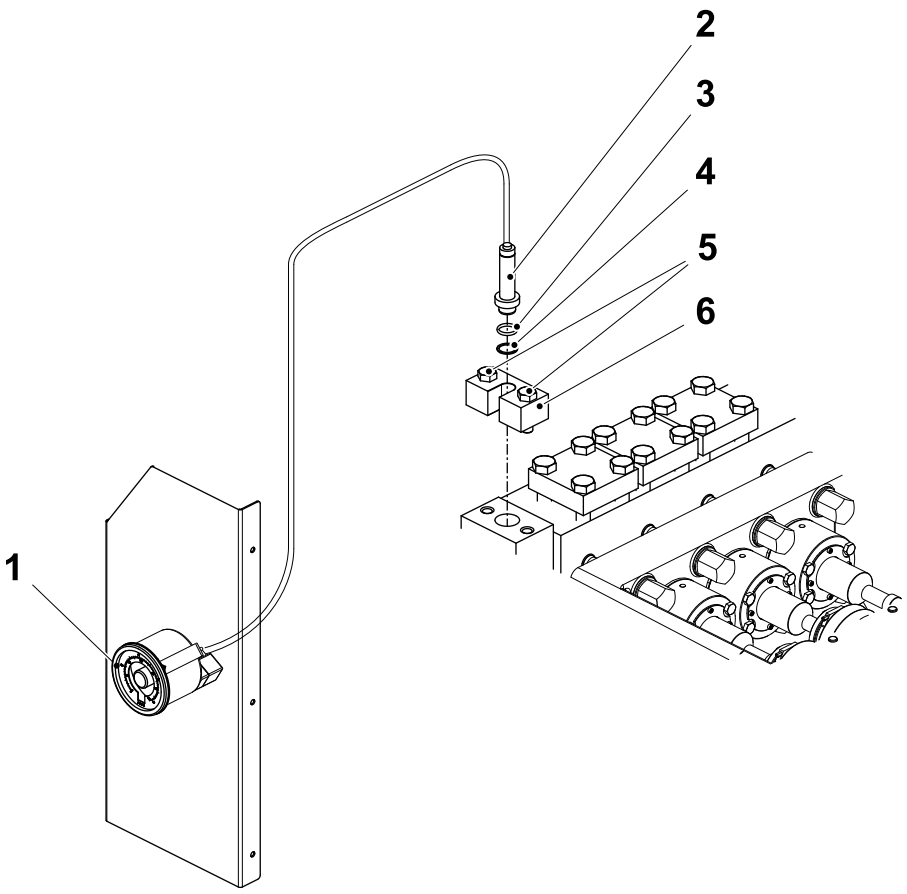

1 Hydraulic pressure gauge, [49]
2 Pressure gauge, [49]
3 Back-up ring, [53]
4 O-ring, [52]
5 Screw, [42]
6 Manometer flange, [40]

2.6 Hydraulic Unit

2.6-1 Hydraulic Unit - Check

Check:

- all connections for leakage
- the function of the hydraulic system

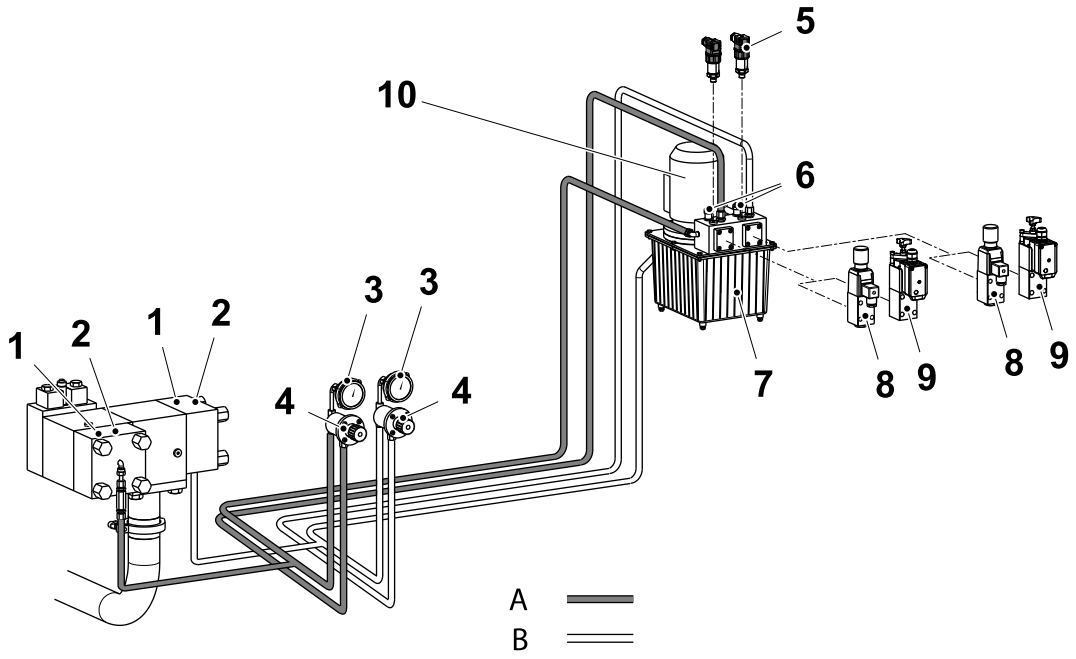

A	1st stage
B	2nd stage

Pos.	Pos. SPC drw	Description
1		Hydraulic cylinder
2		Vent plug
3		Hydraulic pressure gauge
4		Pressure adjusting valve
5	BP828 / 829 (B828 / 829)	Sensor, hydraulic pressure (option 16)
6		Safety valve
7		Hydraulic unit
8	K822 / 823 (Y822 / 823)	Pressure relief valve (option 18)

(Cont'd)

(Cont'd)

9	K824 / 825 (Y824 / 825)	Remote setting valve (option 20)
10	M802 / 804	Motor

2.6-2 Hydraulic Unit - Check Pressure Gauge

Check:

- pressure gauge,

  (pressure gauge value - homogenizing pressure, see the test protocol).

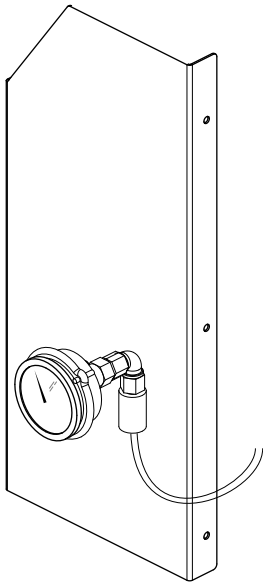

2.6-3 Hydraulic Unit - Check Pressure Relief Valve (Optional)

Check that the hydraulic pressure goes on/off when the pressure relief valve (1) is activated/deactivated.

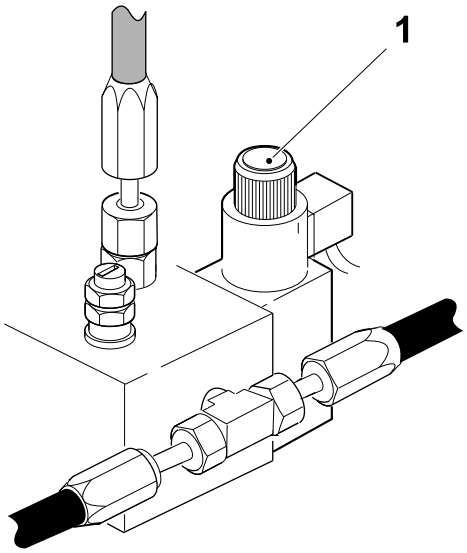

1 Pressure relief valve, [K 822/823]

2.6-4 Hydraulic Unit - Check Remote Setting Valve (Optional)

Check function of the remote setting valve (1) and remote setting valve (2) .

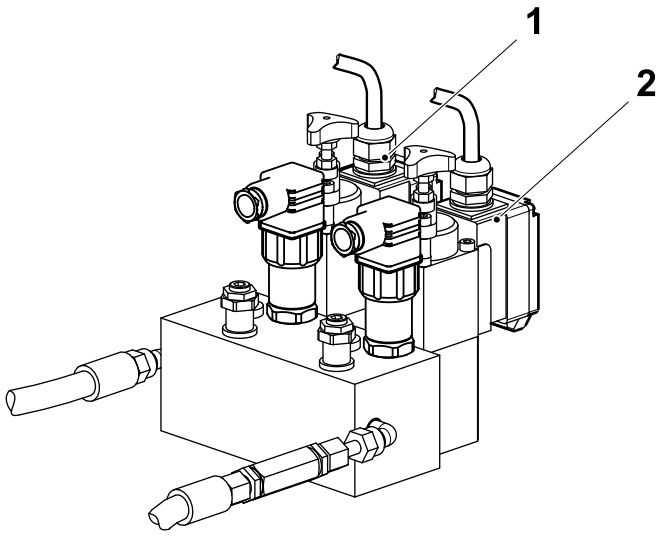

1 Remote setting valve (2nd stage), [K 825]
2 Remote setting valve (1st stage), [K 824]

2.6-5 Hydraulic Unit - Check Sensor, Hydraulic Pressure (Optional)

Check function of the hydraulic pressure sensor (1) and hydraulic pressure sensor (2) .

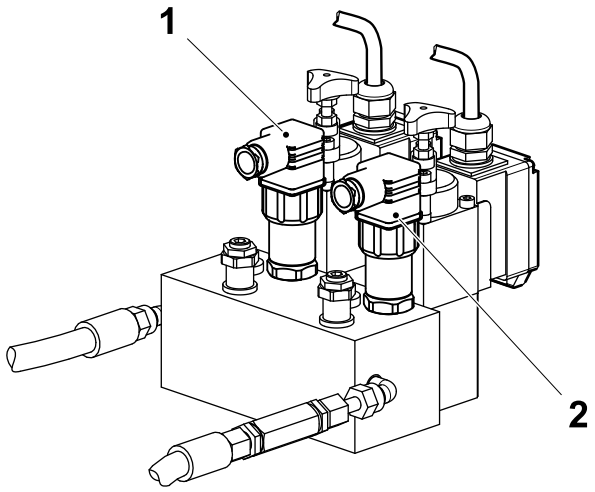

1 Sensor, hydraulic pressure (2nd stage), [BP 829]
2 Sensor, hydraulic pressure (1st stage), [BP 828]

2.6.1 Hydraulic Unit

2.6.1-1 Hydraulic Unit - Check

Check:

a) all connections for leakage

b) the oil level (if needed top up with oil according to recommendations in 2.12.2 Lubrication on page 2-111.)

2.6.1-2 Hydraulic Unit - Change Oil

a) Unscrew the drain plug (3) and drain all oil from the tank.

b) Fill oil according to the recommendations in 2.12.2 Lubrication on page 2-111.

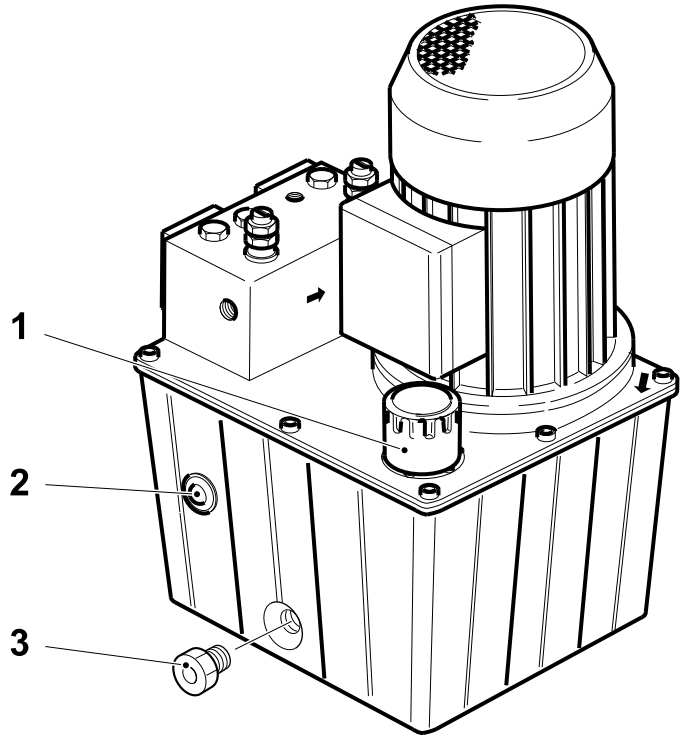

1 Filler cap, [10]
2 Level glass, [9]
3 Drain plug

2.6.1-3 Hydraulic Unit - Disassemble

a) Remove:
- the tank fastening screws (13), disconnect the oil pipes (1) and lift out the pump unit
- the screws (2) and lift up the motor /pump
- the oil pipes (9) from the pump (11)
- the screws (5) and take out the pump
- the lock ring (7) and remove the suction strainer (8)
- the connection (6)
- the angel connection (10)
- the carrier (4)

b) Assemble in reverse order.

c) Install a new packing (12).

d) Refill with new oil, see 2.12.2 Lubrication on page 2-111 for specifications.

e) Bleed the hydraulic system.

(Cont'd)

(Cont'd)

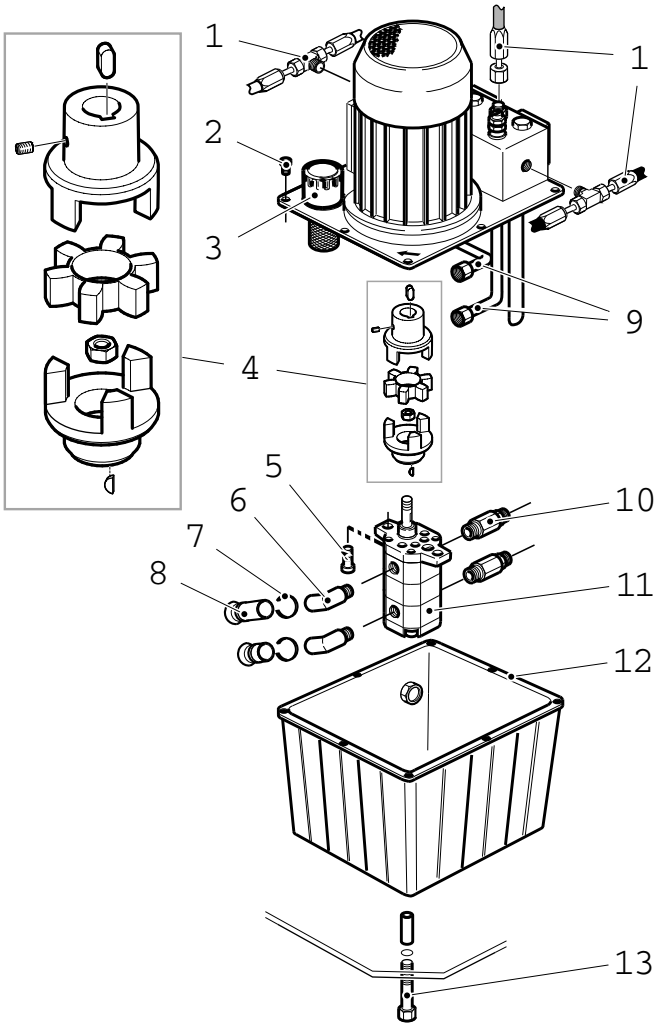

1 Pipe
2 Screw
3 Filler cap, [10]
4 Carrier
5 Screw
6 Connection, [11]
7 Lock ring, [11]
8 Strainer, [11]
9 Pipe
10 Connection
11 Pump, [8]
12 Packing, [41]
13 Screw, [59]

2.6.1-4 Hydraulic Unit - Change Parts

a) Disassemble the hydraulic unit according to 2.6.1-3 Hydraulic Unit - Disassemble on page 2-67.

b) Clean the suction strainers (8).

c) Check:

- the shaft coupling (14) and shaft coupling (16) for wear
- condition of the rubber cross (15)
- condition of the pump (11)

(Cont'd)

(Cont'd)

d) Change parts as required.

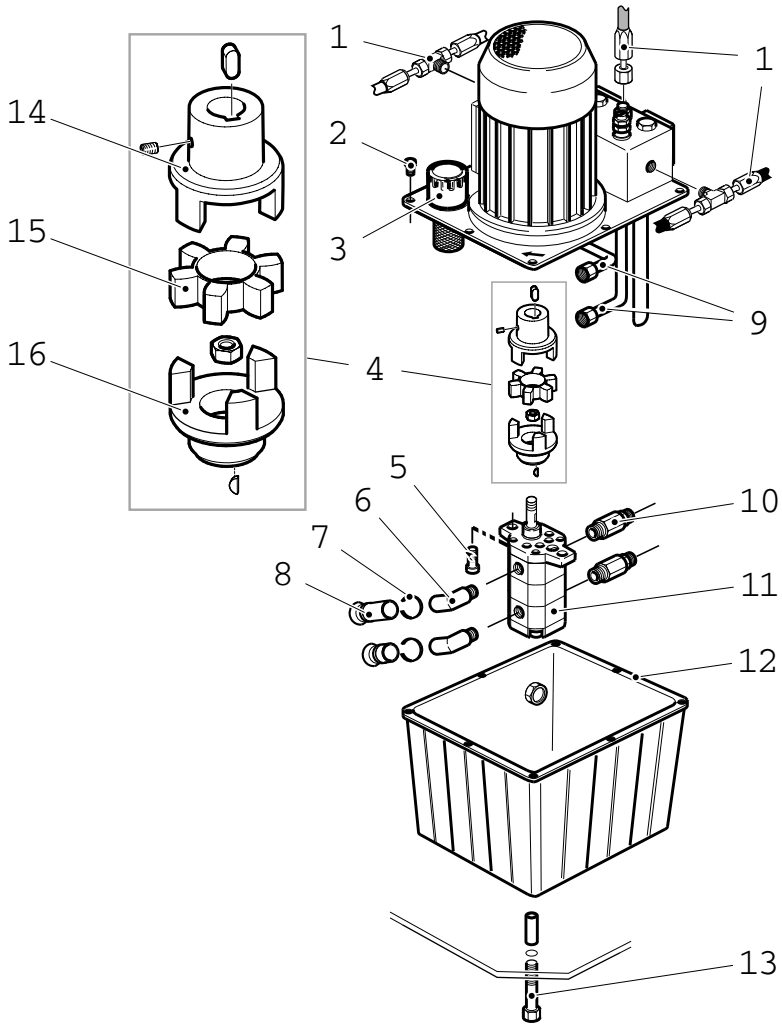

1 Pipe
2 Screw
3 Filler cap, [10]
4 Carrier
5 Screw
6 Connection, [11]
7 Lock ring, [11]
8 Strainer, [11]
9 Pipe
10 Connection
11 Pump, [8]
12 Packing, [41]
13 Screw, [59]
14 Shaft coupling, [32]
15 Rubber cross, [33]
16 Shaft coupling, [32]

2.6.1-5 Hydraulic Unit - Check Safety Valve

CAUTION

It is important that the safety valves are set to release the hydraulic pressure within 5 bar over the homogenizing working pressure.

a) Check:

- the safety valves (1)

  Increase the homogenizing pressure 5 bar (75 psi) and check that the safety valve opens.

b) If fault, set or change the safety valves (1).

c) Reset the homogenizing pressure.

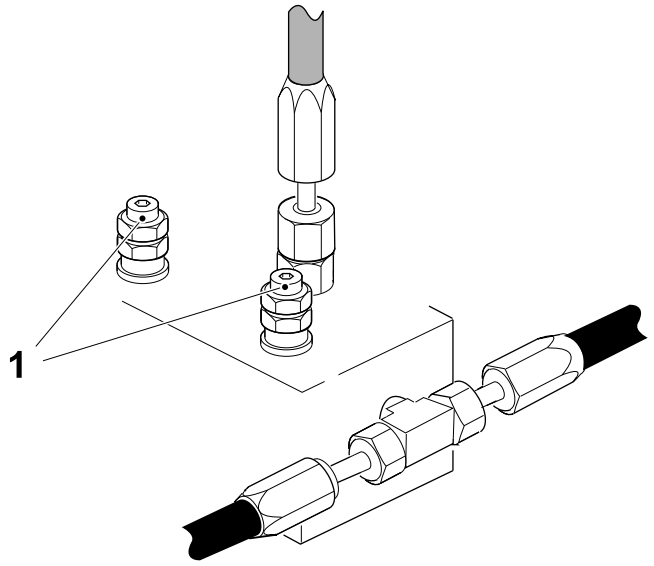

1 Safety valve, [5]

2.7 Pressure Lubricating System

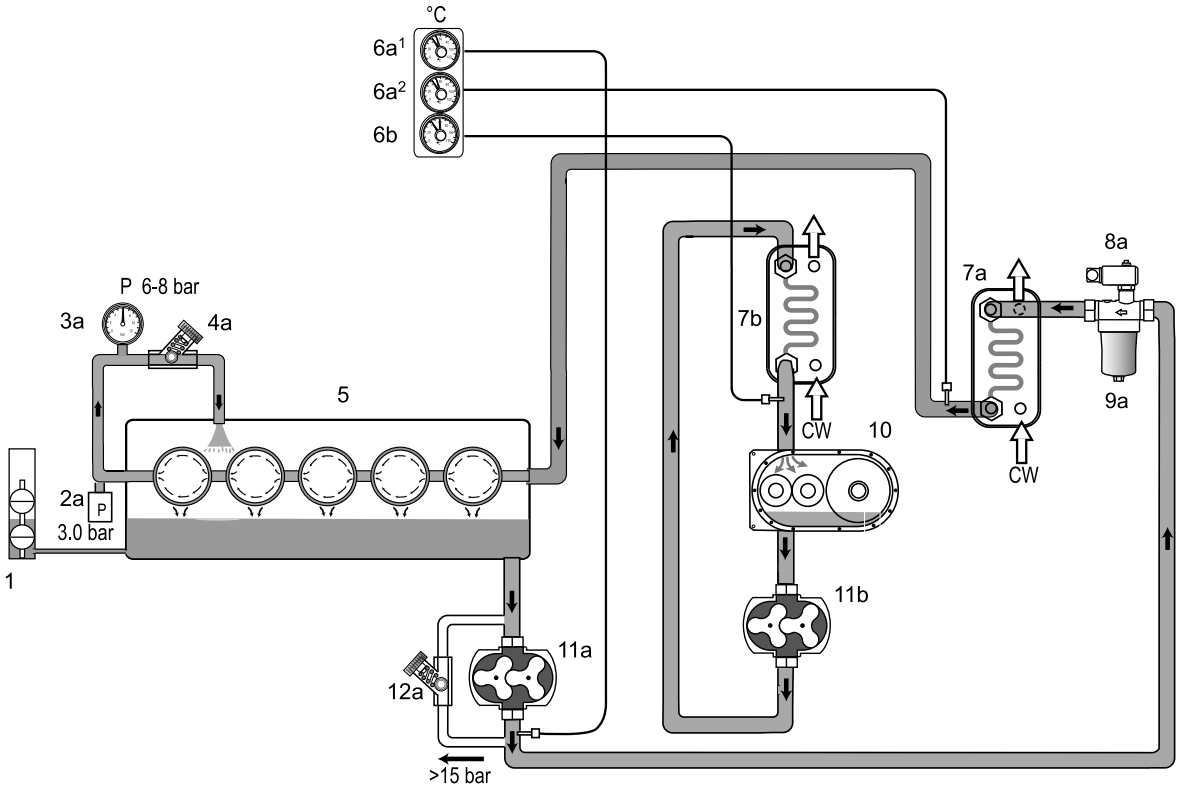

a = Crankcase circuit b = Gearbox circuit			
Pos.	**Pos. SPC drw**	**Description**	
1	107	Oil level switch crankcase - High/Low	
2a	4	Pressure guard - 3.0 bar (45 psi)	
3a	18	Pressure gauge	
4a	10	Pressure regulator - Adjust to 6-8 bar (90-120 psi)	
5		Crankcase	
6a1		Alarm point 60°C (140°F)	Thermometer with alarm set point
6a2		Alarm point 55°C (131°F)	
6b		Alarm point 60°C (140°F)	
7a-b	3	Oil cooler	
8a		Pressure differential guard - 2.2 bar (33 psi) (Indicates clogged filter)	
9a		Oil filter	
10		Gearbox	
11a-b	9	Pressure lubricating pump	
12a	11	Safety valve - 15 bar (218 psi)	

(Cont'd)

(Cont'd)

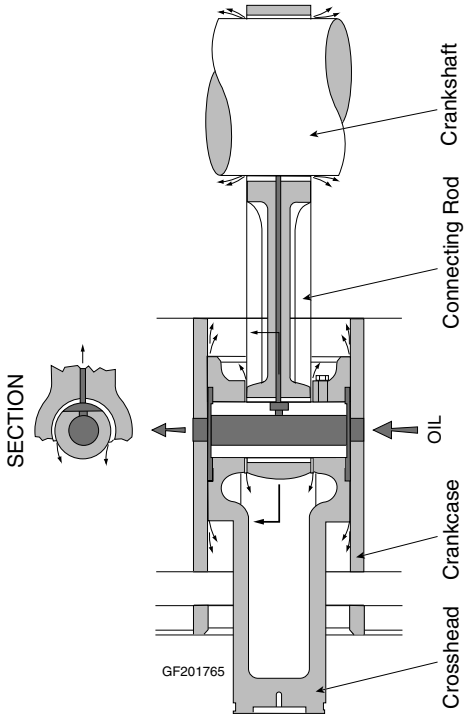

Crankcase lubrication

2.7-1 Pressure Lubricating System - Check Motor

a) Check the motor (2) for wear.

b) Check and if necessary clean the motor cooling fan (1) with compressed air.

c) Remove the inspection cover (6) and check condition for the rubber cross (4).

d) Replace parts as required.

(Cont'd)

(Cont'd)

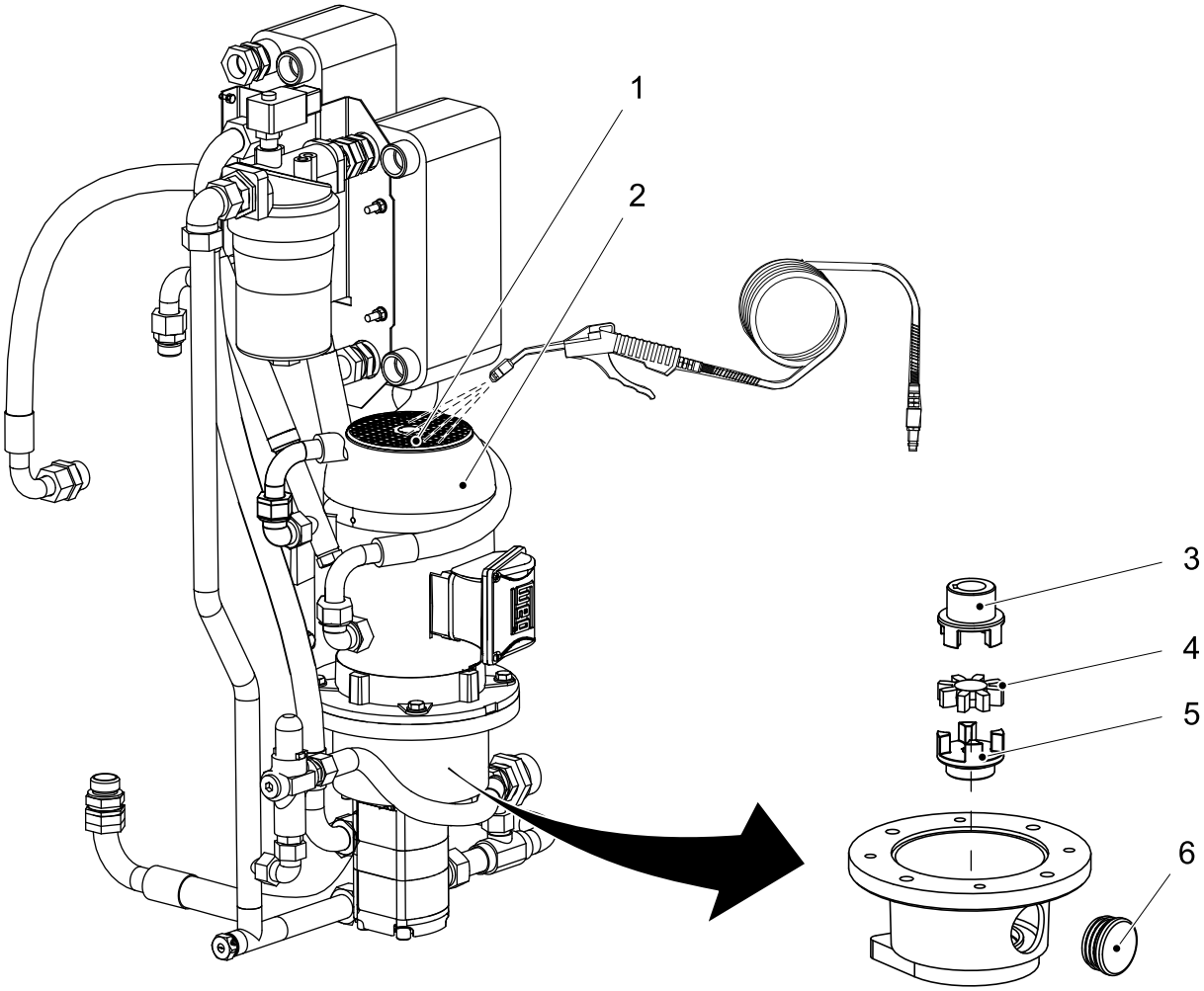

1 Fan
2 Motor, [M803]
3 Shaft coupling, [1]
4 Rubber cross, [2]
5 Shaft coupling, [3]
6 Inspection cover, [5]

2.7-2 Pressure Lubricating System - Check Safety Valve

CAUTION
Do not exceed 11 bar (165 psi) during checking/setting.
If needed, replace the safety valve.

CAUTION
Open the pressure regulator (2) and adjust to 6-8 bar.

The safety valves are at delivery set to open at 15 bar (218 psi).

a) Check the crankcase safety valve (3):

(Cont'd)

(Cont'd)

- check that the pressure does not exceed 15 bar (218 psi) with the pressure regulator (2) fully closed.

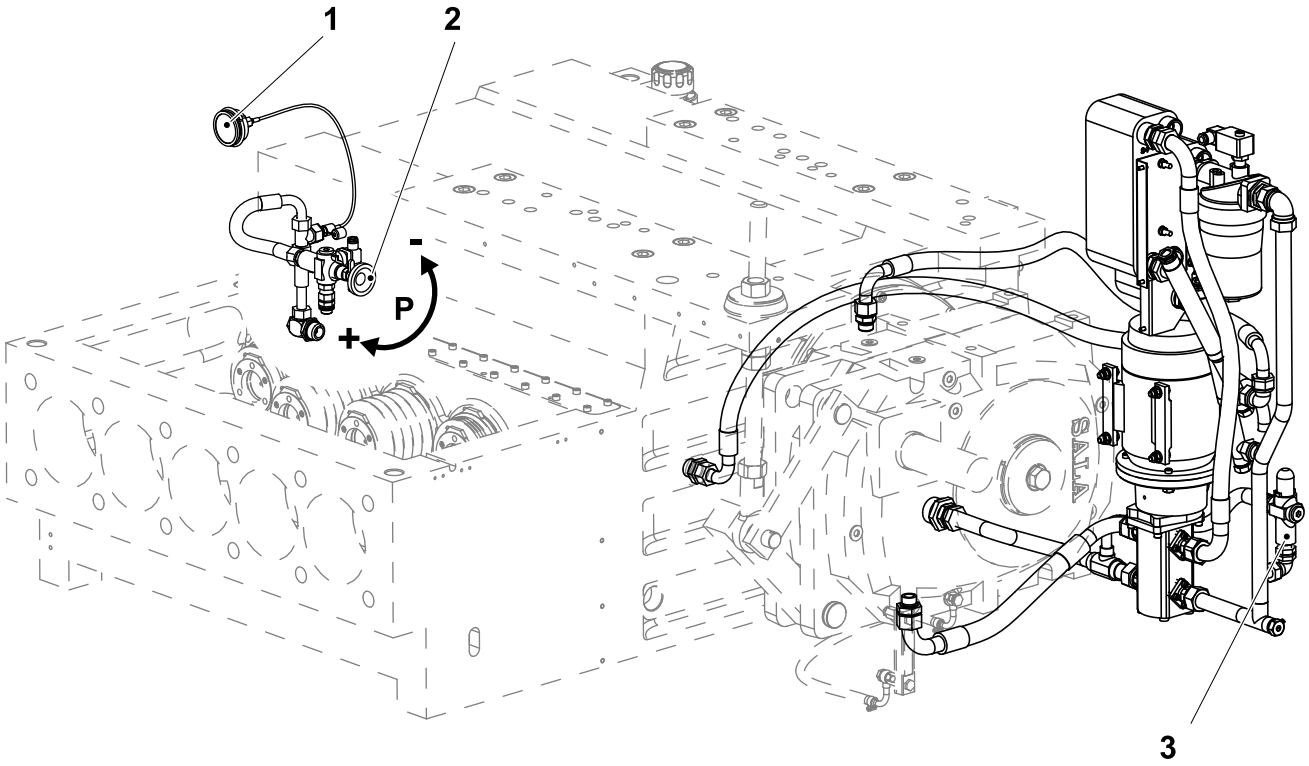

1 Pressure gauge, [18]
2 Pressure regulator, [10]
3 Safety valve - crankcase, [11]

2.7-3 Pressure Lubricating System - Check Oil Filter

The filter is equipped with visual and electrical contamination indicator.

The indicator is set to warn if the difference between the in- and outlet pressure for the filter exceeds 2.2 bar (33 psi).

Visual Indication

The red button pops out, see figure B.

Figure A shows the indicator button in normal position.

Electrical Indication

The alarm 'Clogged filter' is activated.

Alarm at Start

During cold starts, the indicator may give a warning signal.

(Cont'd)

(Cont'd)

Depress the red button when the oil has reached operating temperature. If the red button immediately pops out again, the filter element has to be replaced after the end of the shift.

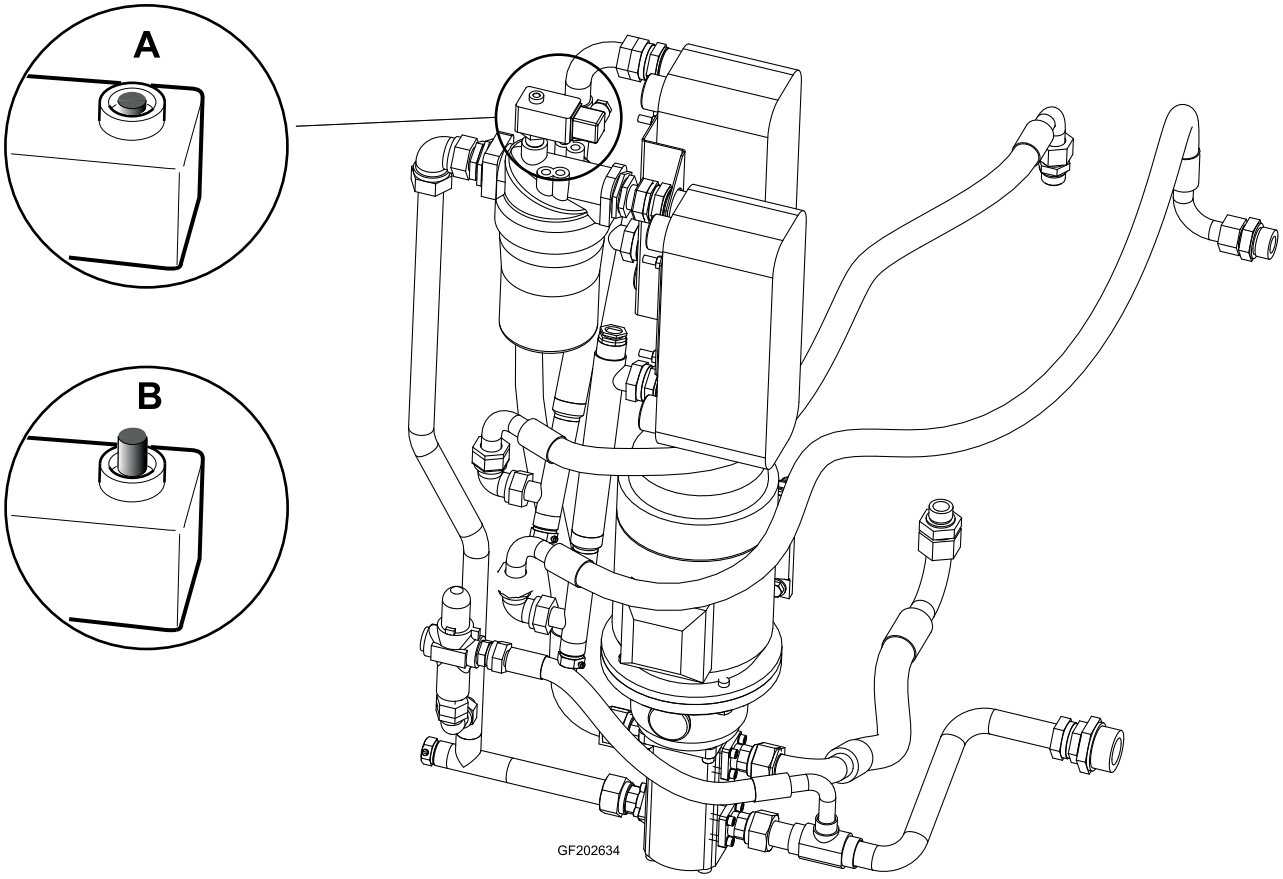

2.7-4 Pressure Lubricating System - Change Oil Filter

a) Stop the lubricate system and relieve the filter from pressure.

b) Unscrew the filter bowl (4) by turning counter-clockwise.

c) Clean the bowl using a suitable cleaning solvent.

d) Remove the filter element (2) with a side-to-side motion.

e) Check o-ring (1) and o-ring (3) for damage. Replace if needed.

f) Push the new filter element (2) over the spigot in the filter head.

g) Turn the bowl (4) clockwise until it comes to a full stop.

h) Back of the bowl 1/8 to 1/2 turn.

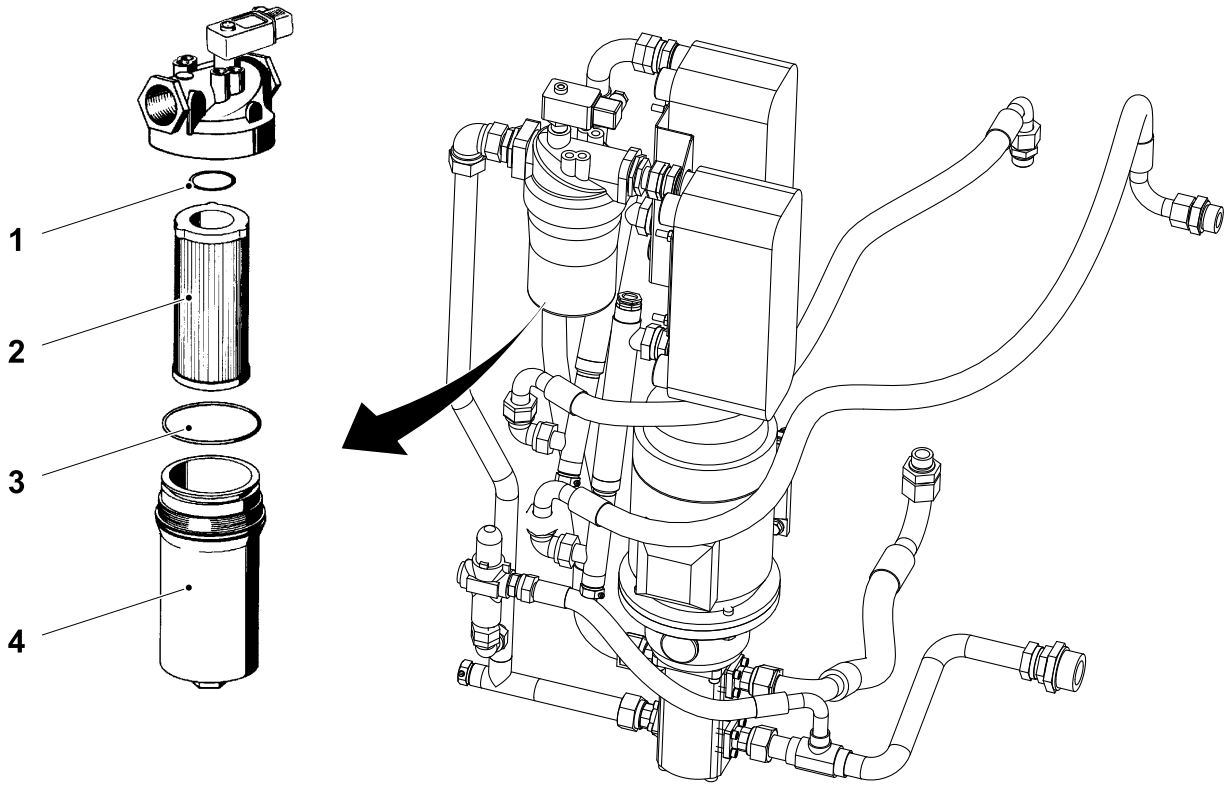

1 O-ring, [2]
2 Filter element, [3]
3 O-ring, [4]
4 Bowl

2.7-5 Pressure Lubricating System - Check Pressure Regulator

If the pressure drops below 6 bar (90 psi), turn the regulator clockwise to increase the pressure. Adjust to 6-8 bar (90-120 psi).

If 6 bar (90 psi) can not be achieved, check setting of the safety valve, see item 6-2. The safety valve must be set to a higher value than the regulator.

(Cont'd)

(Cont'd)

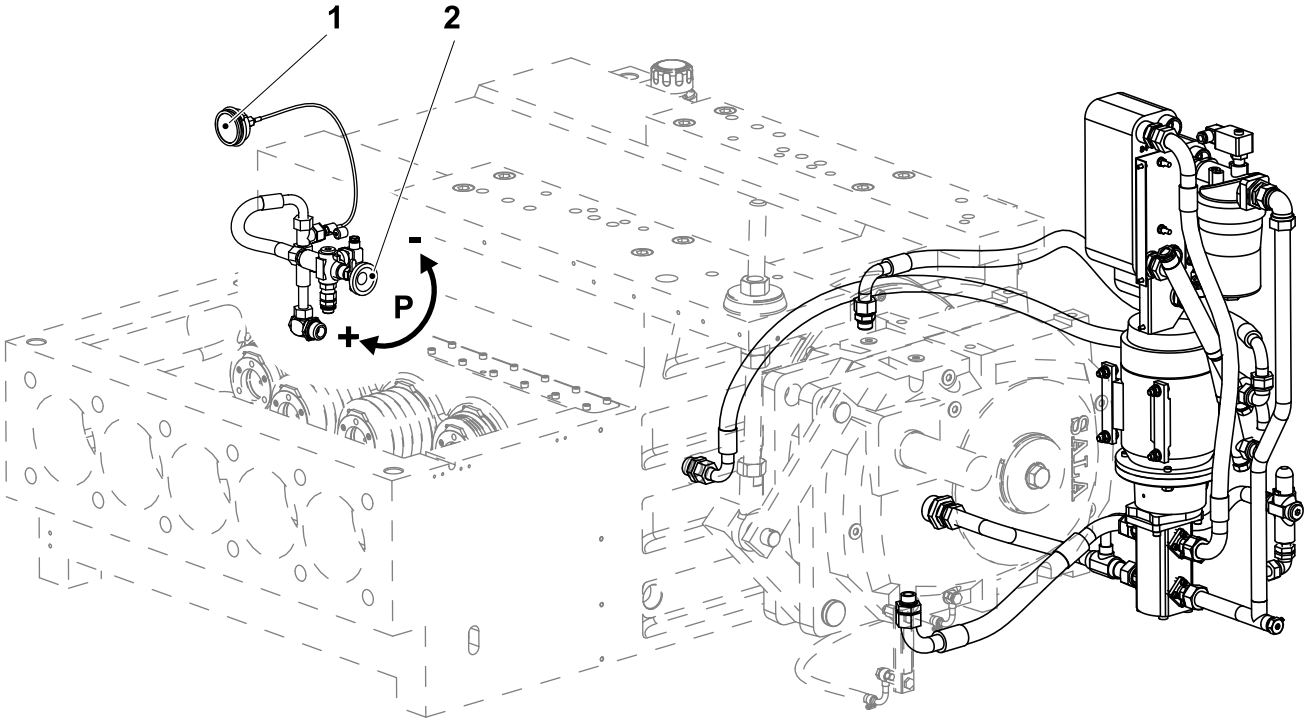

1 Pressure gauge, [18]
2 Pressure regulator, [10]

2.7-6 Pressure Lubricating System- Check Pressure Gauge

Check function for the pressure gauge (1).

Pressure gauge	Correct indicated value	
	At stand still	During operation
1	0 bar (0 psi)	6-8 bar (90-120 psi)

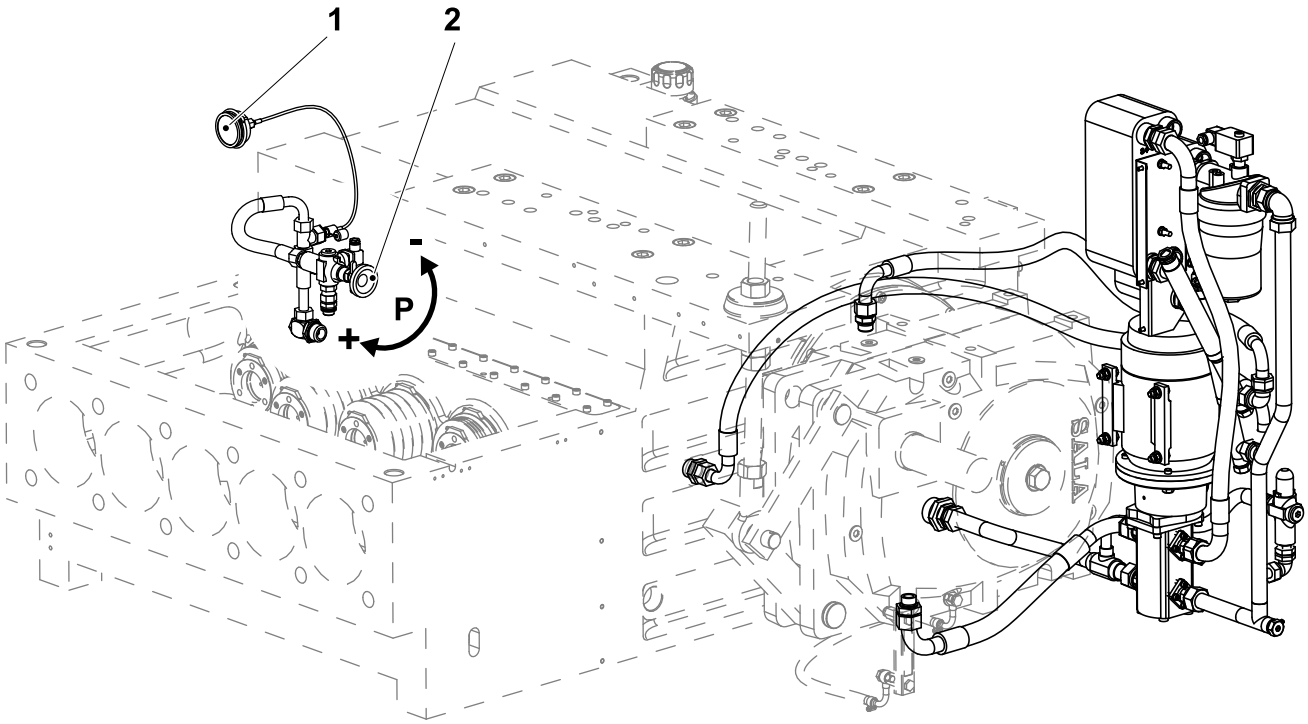

1 Pressure gauge, [18]
2 Pressure regulator, [10]

2.7-7 Pressure Lubricating System - Check Pressure Guard

Check function for the pressure guard (1).

Pressure gauge	Alarm point
1	3.0 bar (45 psi)

(Cont'd)

(Cont'd)

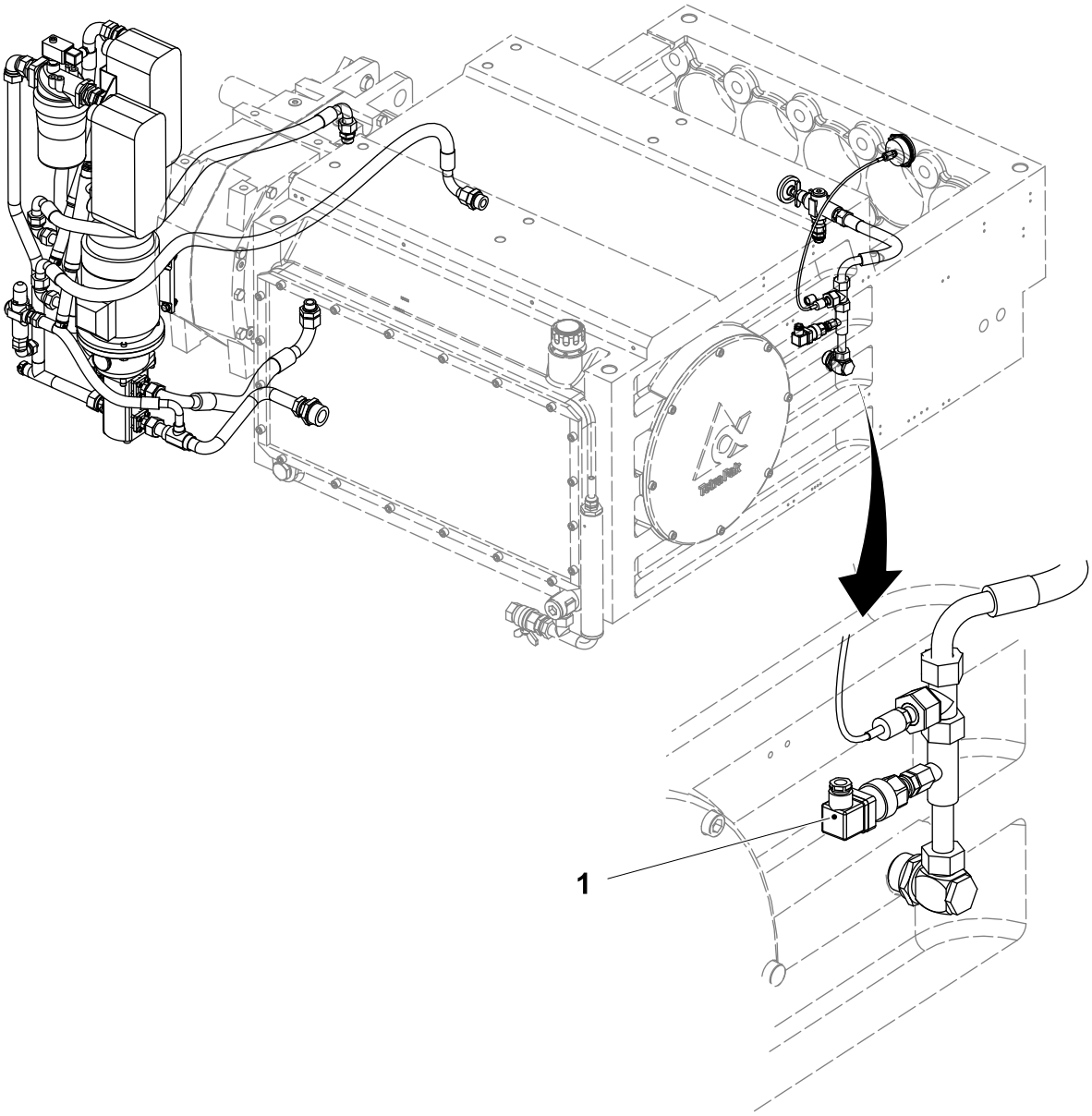

1 Pressure guard - Crankcase, [4]

2.7-8 Pressure Lubricating System - Check Heat Exchanger

Check the heat exchanger (1) and heat exchanger (2) for leakage.

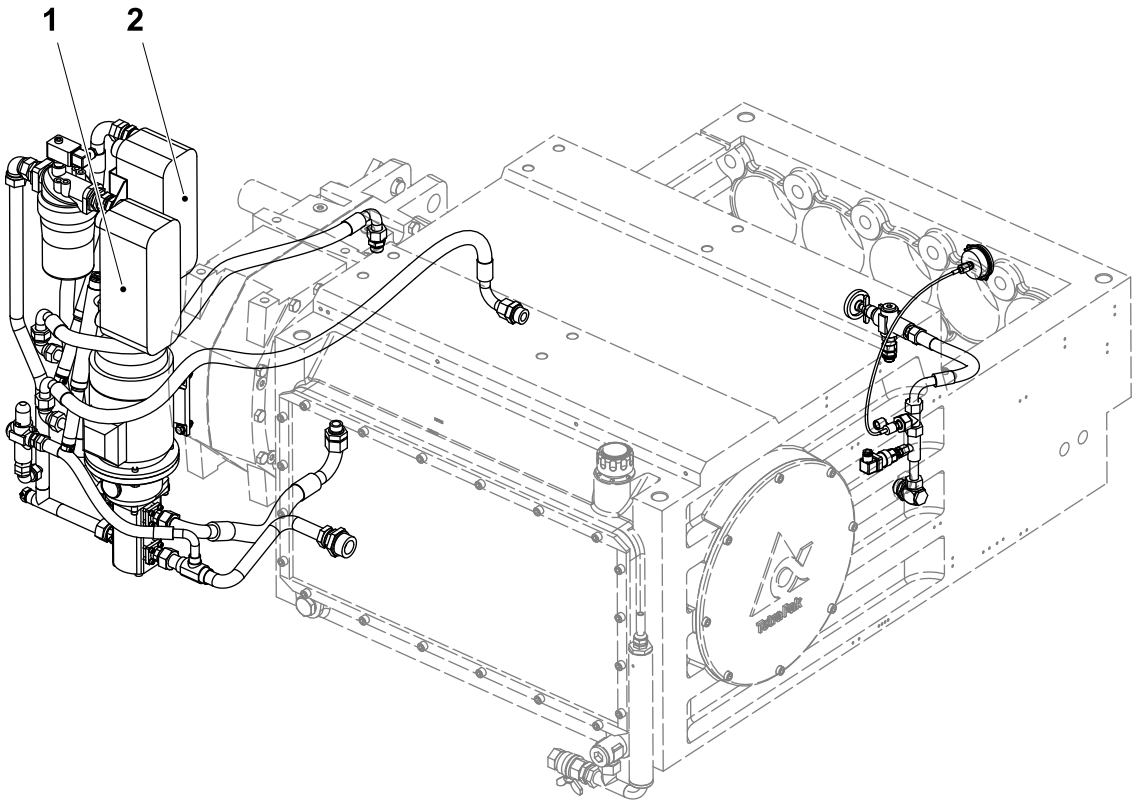

1 Heat exchanger - Crankcase, [3]
2 Heat exchanger - Gearbox, [3]

2.8 Frame with Body

2.8-1 Frame with Body - Check Doors and Covers

a) Check that the doors are undamaged and fit properly.

b) Check that all protecting covers are installed.

c) Open the doors and check the hinges (1) for wear. Check also the fastening of the hinges.

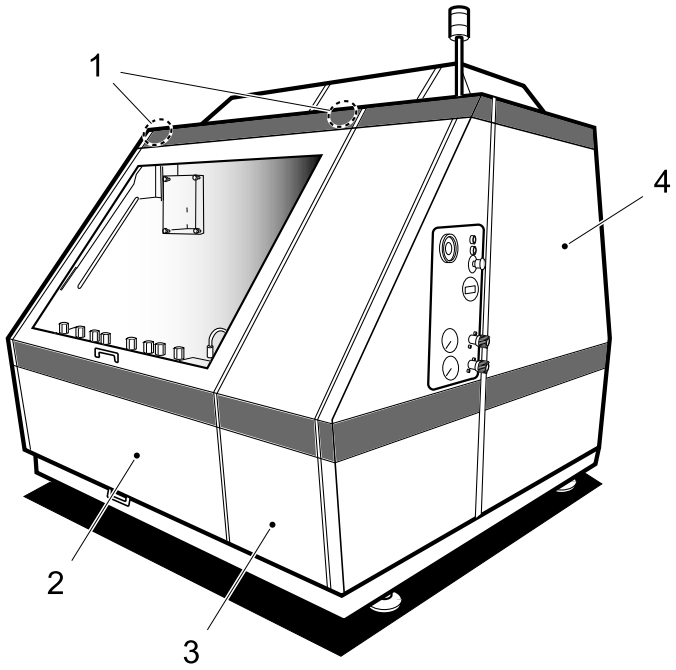

1 Hinge
2 Door
3 Door
4 Door

2.8-2 Frame with Body - Check Gas springs

a) Check the function of the two gas springs (1).

b) Check that the lock nuts for the gas springs are tightened.

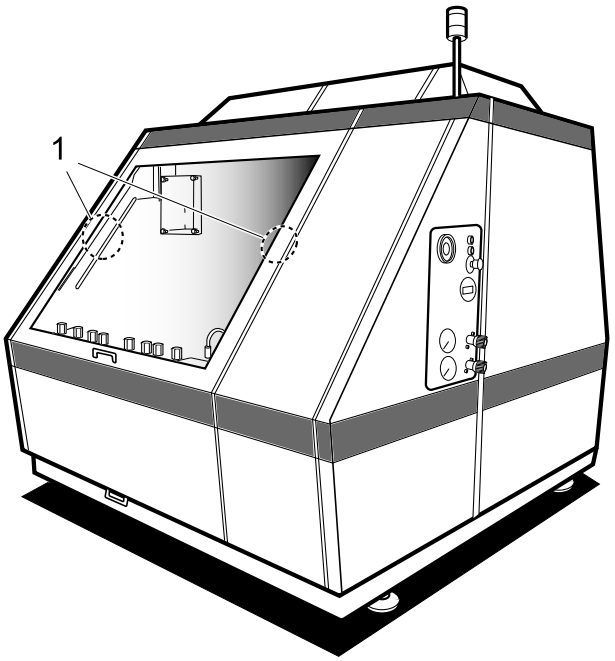

1 Gas spring

2.8-3 Frame with Body - Check Electromagnetic Door Lock / Door Guard

a) An electromagnetic door lock (2) prevents the door (1) for the drive unit to be opened when the machine is running. It also prevents the machine from starting with the door open.

Check the function.

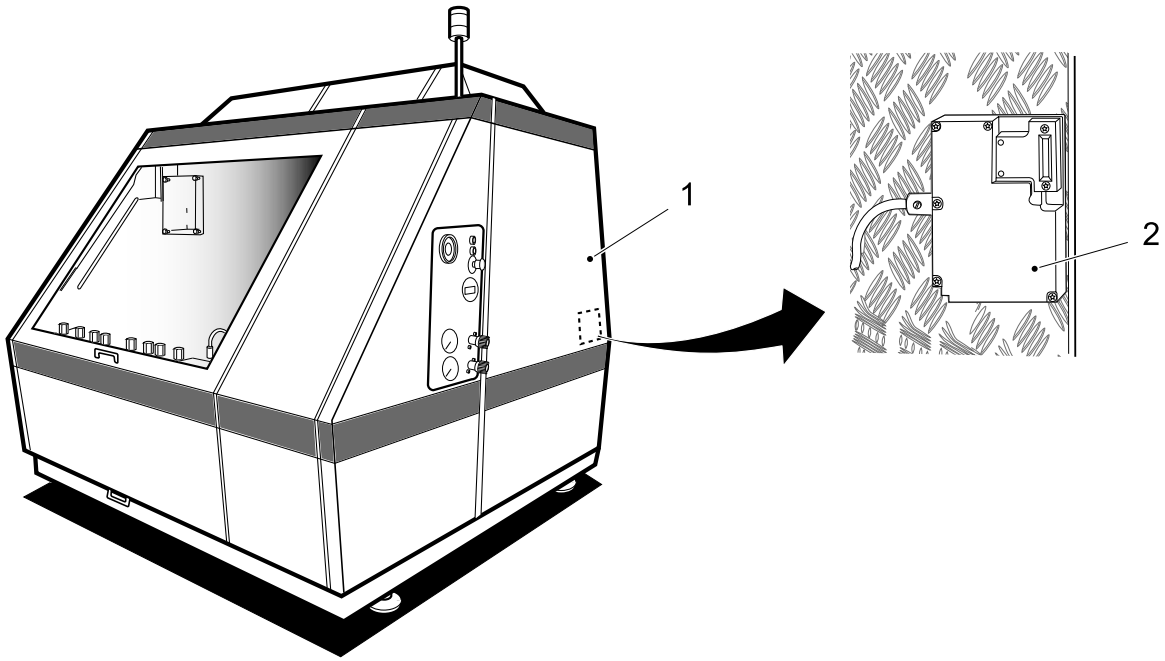

1 Door, drive unit
2 Electromagnetic door lock / Door guard

2.9 Drive Unit

2.9-1 Drive Unit - Clean Drive Motor

a) Check and if necessary clean the drive motor cooling fan (1) with compressed air.

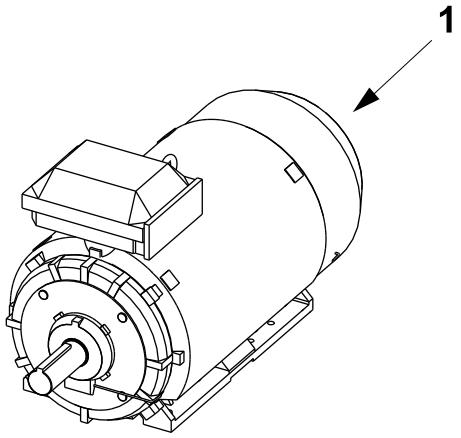

1 Cooling fan

2.9-2 Drive Unit - Lubricate Drive Motor

WARNING

Risk of jam

Make sure to stay clear from V-belts and belt pulleys.

a) Use an alemite gun to lubricate the nipples (1) for the bearings.

If lubrication is done at standstill, do not fill all at one time. Run the motor at least once between the fillings.

Note! Lubricating should be done during running; otherwise grease may penetrate into the motor through the sealing.

See 2.12.2 Lubrication on page 2-111 for recommended type of grease.

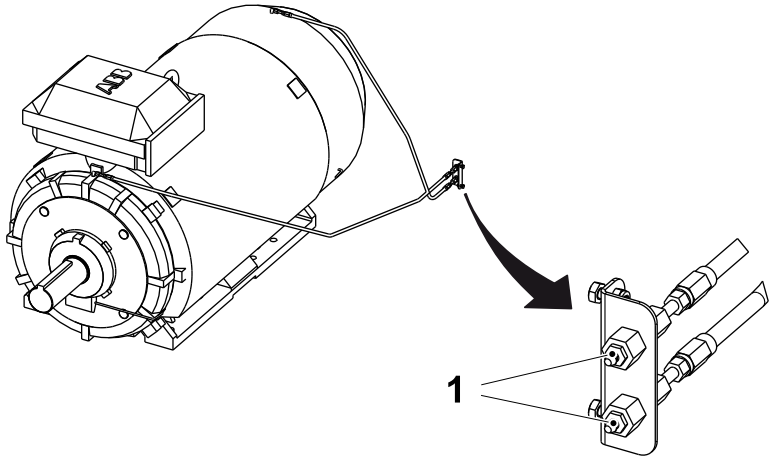

1 Nipple

2.9-3 Drive Unit - Check V-belts

a) Check if the belts are worn. Replace any worn belt, see2.9-4 Drive Unit - Change V-belts on page 2-88.

b) Check the belt tension as follows:

- Start the optical tension meter and hold the meter approx. 20 mm above one of the belts, centred between the belt pulleys.
- Gently hit the belt with a ball-peen hammer to create vibrations.
- Read the frequency value on the tension meter.

  Note! The V-belt tension can be found in Technical Data in chapter 5 Technical Documents together with correct value for frequency measurement.
- Repeat the steps for all the belts.

c) Adjust the belt tension if needed.

Note! An incorrectly tensioned V-belt will wear out quickly and also decrease the lifetime of the motor and gearbox.

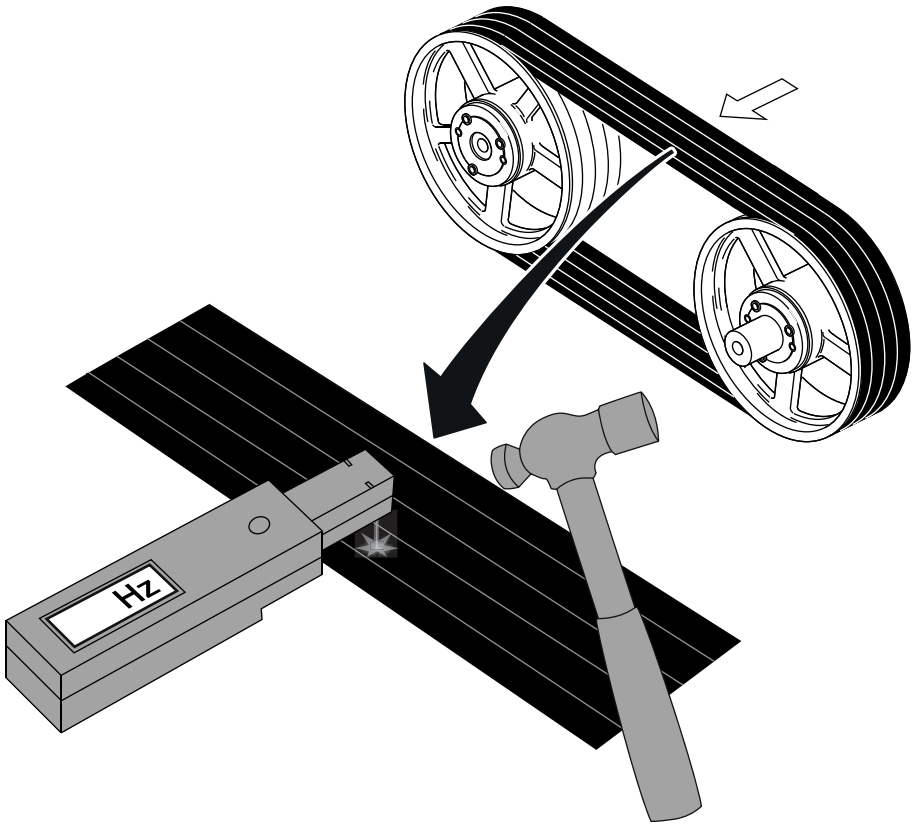

(Cont'd)

(Cont'd)

Alternative Method

An alternative method to check the belt tension is to use a Krikit gauge.

Note! Use a correct Krikit gauge according to the belt tension and the table below. The V-belt tension can be found in Technical Data in chapter 5 Technical Documents together with correct value for frequency measurement.

Tool	Belt tension
Krikit I	150-700 N
Krikit II	500-1500 N
Krikit III	1500-3000 N

(Cont'd)

(Cont'd)

a) Insert a finger (1) in the rubber strap (2) according to the illustration below.

b) Centre it across the width and as close as possible to the middle span of the belt (3) .

c) Slowly depress the pressure pad perpendicular to the back of the belt (3). After the click, remove the gauge (4) and read the belt tension by looking on the number where the top side of the pivoting arm (5) crosses the numbered scale (6) .

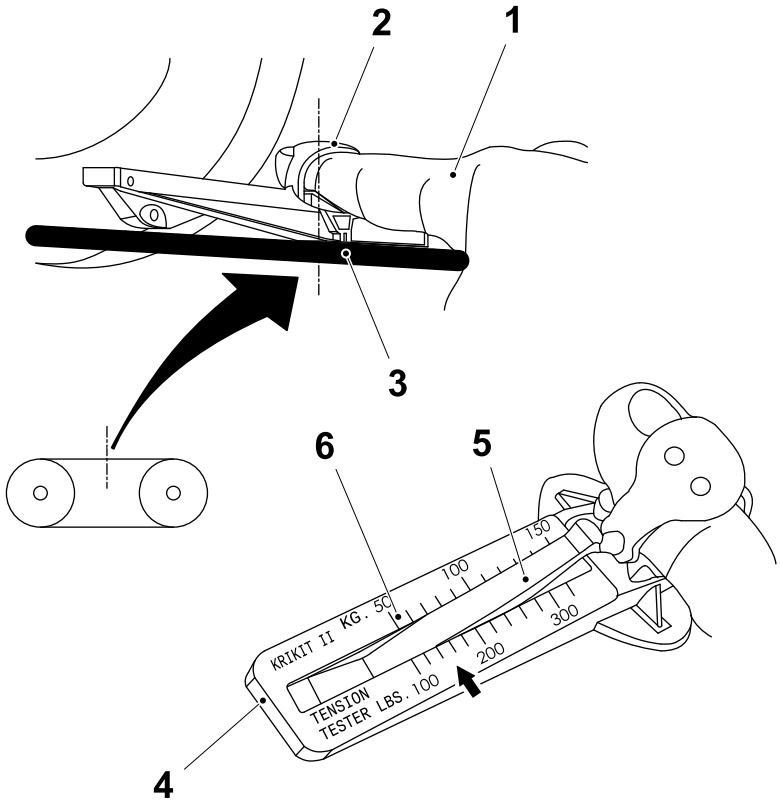

1 Finger
2 Rubber strap
3 Belt
4 Gauge
5 Pivoting arm
6 Numbered scale

2.9-4 Drive Unit - Change V-belts

CAUTION

Risk of damage!

Do not use tools that can damage the V-belts.

CAUTION

Risk of personal injury!

Do not move V-belts by grabbing them directly. Always use the belt pulley to avoid injury.



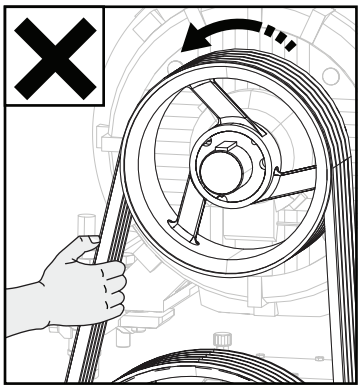

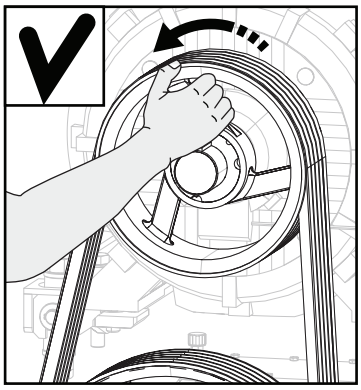

(Cont'd)

(Cont'd)

a) Lift the gearbox by help of the adjusting bolt (1) and remove the V-belts.

Note! Always replace all belts at the same time.

b) Fit new V-belts by hand.

c) Adjust the belt tension.

d) Remove the cover (3) held by the screws (2):

- when re-tension the belts.
- at piston maintenance, when turning the pulleys by hand.

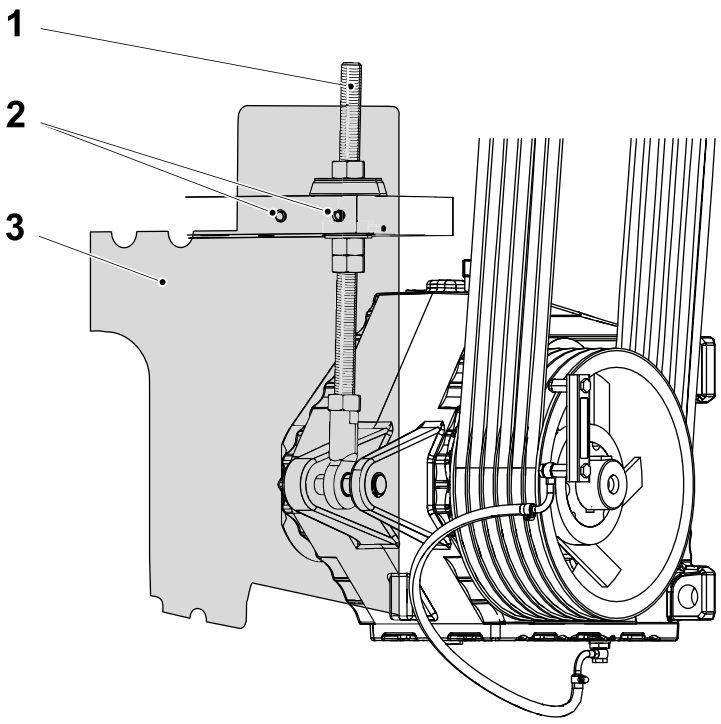

1 Adjusting bolt, [7]
2 Screw, [530]
3 Cover, [155]

2.9-5 Drive Unit - Check Belt Pulleys

a) Check with a ruler that the belt pulleys on the drive motor and gearbox are aligned.

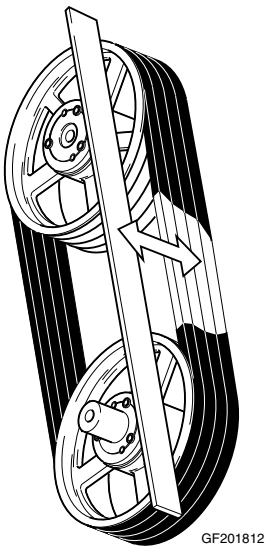

2.9-6 Drive Unit - Remove Gearbox

CAUTION
Do not use tools that can damage the V-belts.

WARNING
Risk of jam.

a) Drain the oil and disconnect the oil hoses from the gearbox.

b) Remove the V-belts according to 2.9-4 Drive Unit - Change V-belts on page 2-88.

c) Depending on the dimension for the belt pulley (3), it may be necessary to remove it in order to remove the bolt (5).

d) If needed, expand the slot (4) in the belt pulleys bushing in order to remove the belt pulley from the shaft/key.

e) Remove the bolt (5).

f) Support the gearbox with a fork lift or other lifting equipment.

g) Remove the shaft (2) for the link head (1).

h) Remove the gearbox by using an M30 threaded rod through the gearbox end plate.

(Cont'd)

(Cont'd)

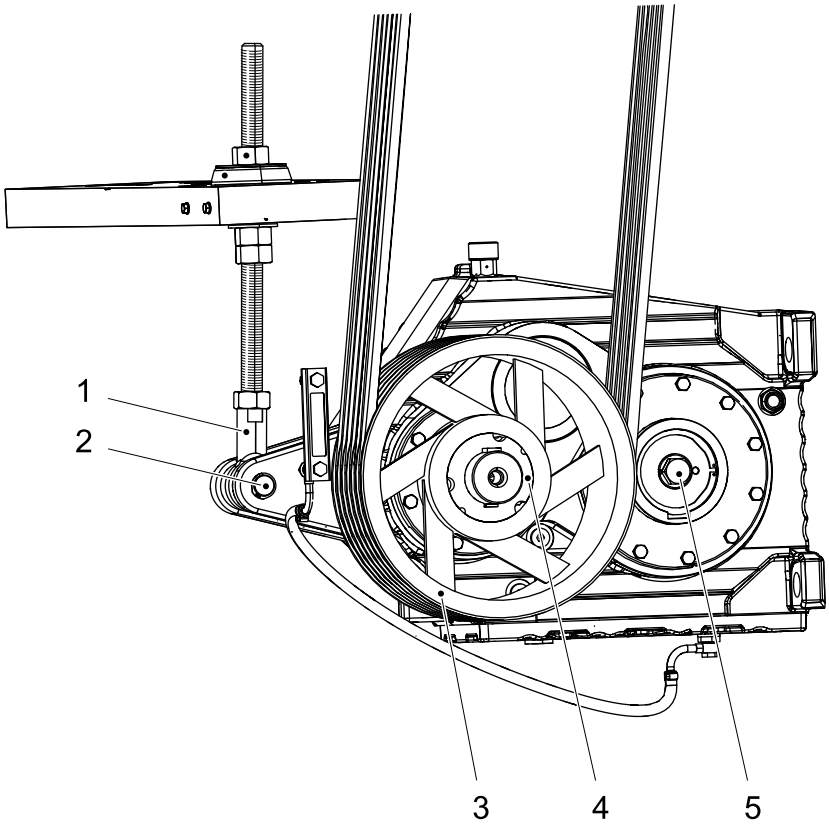

1 Link head, [46]
2 Shaft
3 Belt pulley, [4]
4 Slot
5 Bolt

2.9-7 Drive Unit - Fit Gearbox

a) Install in reverse order to 2.9-6 Drive Unit - Remove Gearbox on page 2-90.

b) Apply some Molycote (grey) on the shaft and the key before installing the gearbox.

c) Install the lid, apply some Locktite 242 on the screws.

d) Install (if removed) the belt pulley.

e) Align the belt pulley to the drive motors belt pulley. Lock the bushing with the correct torque. See 2.12.3 Torque Specifications on page 2-115.

f) Install the V-belts, the adjusting bolt with lock plate and set the belt tension according to 2.9-3 Drive Unit - Check V-belts on page 2-85.

g) Fit the oil hoses to the gearbox and fill up with oil, see 2.9-9 Drive Unit - Change Oil on page 2-94.

h) Install cover(s).

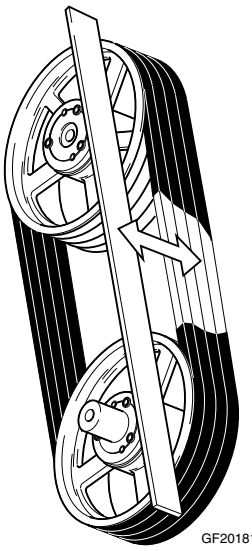
GF201812

2.9-8 Drive Unit - Check Oil

a) Check that the oil is between the level indicators in the gearbox level glass (1).

b) Unscrew the drain plug (2) and check for water in the oil. Drain until all water is drained from the gearbox.

c) Top up with oil. Type of oil, see 2.12.2 Lubrication on page 2-111.

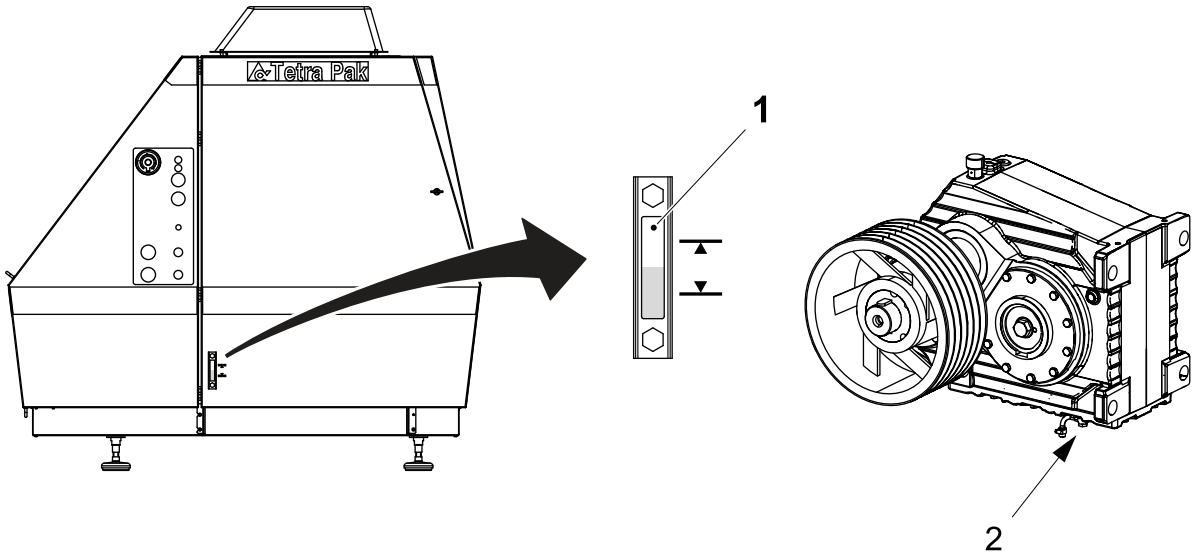

1 Level glass
2 Drain plug

2.9-9 Drive Unit - Change Oil

a) Remove the filler cap (3). Unscrew the drain plug (2) and drain the oil. Refit the plug.

b) Fill up with oil, check the oil level in the sight glass (1). Type of oil, see 2.12.2 Lubrication on page 2-111.

c) Check the oil level after the machine has been running for a while. Top up with oil if needed.

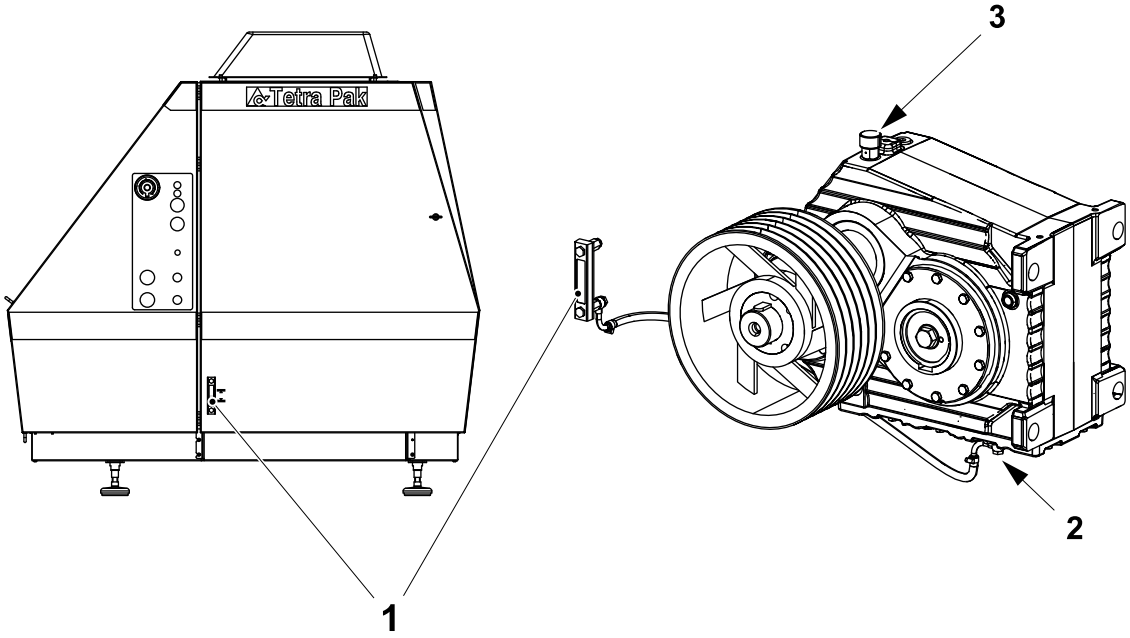

1 Sight glass, [36]
2 Drain plug
3 Filler cap

2.9-10 Drive Unit - Check Seal Rings

a) Check for oil leakage at the sealing rings (1) and sealing ring (2) for the in- and out going shafts.

b) Change as required according to 2.9-11 Drive Unit - Change Seal Rings on page 2-96.

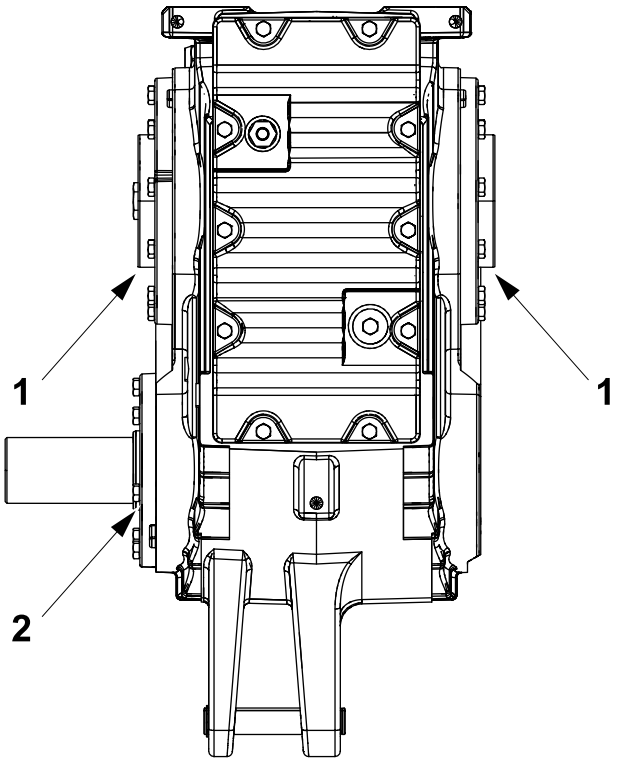

1 Sealing ring, [410]
2 Sealing ring, [380]

2.9-11 Drive Unit - Change Seal Rings

a) Remove the gearbox according to 2.9-6 Drive Unit - Remove Gearbox on page 2-90.

b) Remove and replace the sealing rings (1) and sealing ring (2) for the out- and ingoing shafts.

c) Install the gearbox according to 2.9-7 Drive Unit - Fit Gearbox on page 2-92.

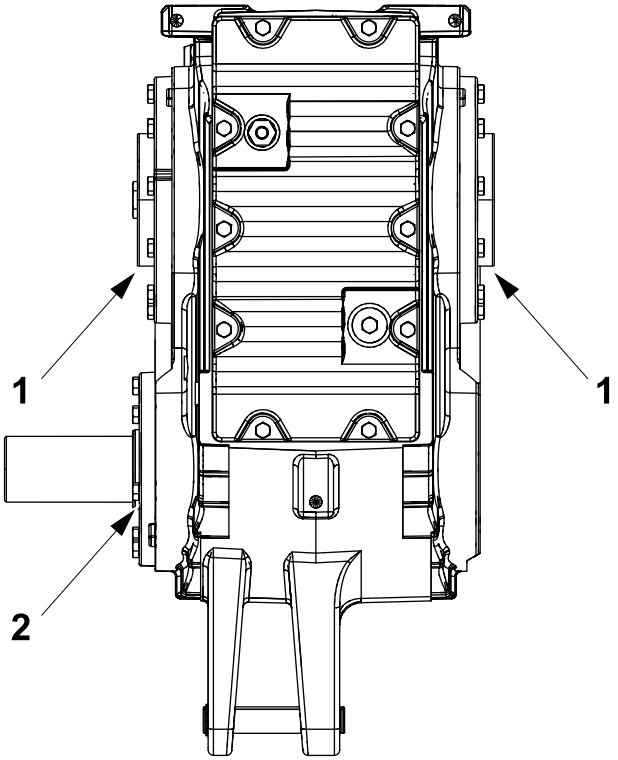

1 Sealing ring, [410]
2 Sealing ring, [380]

2.9-12 Drive Unit - Change Vibration Elements

a) Attach a sling to the gearbox and hook it up to the lifting device. Undo the nuts (3) and lower the gearbox.

b) Replace the rubber washer (1).

c) Check the axial bearing (2) for wear. Change as required.

d) Adjust the belt tension, see 2.9-3 Drive Unit - Check V-belts on page 2-85.

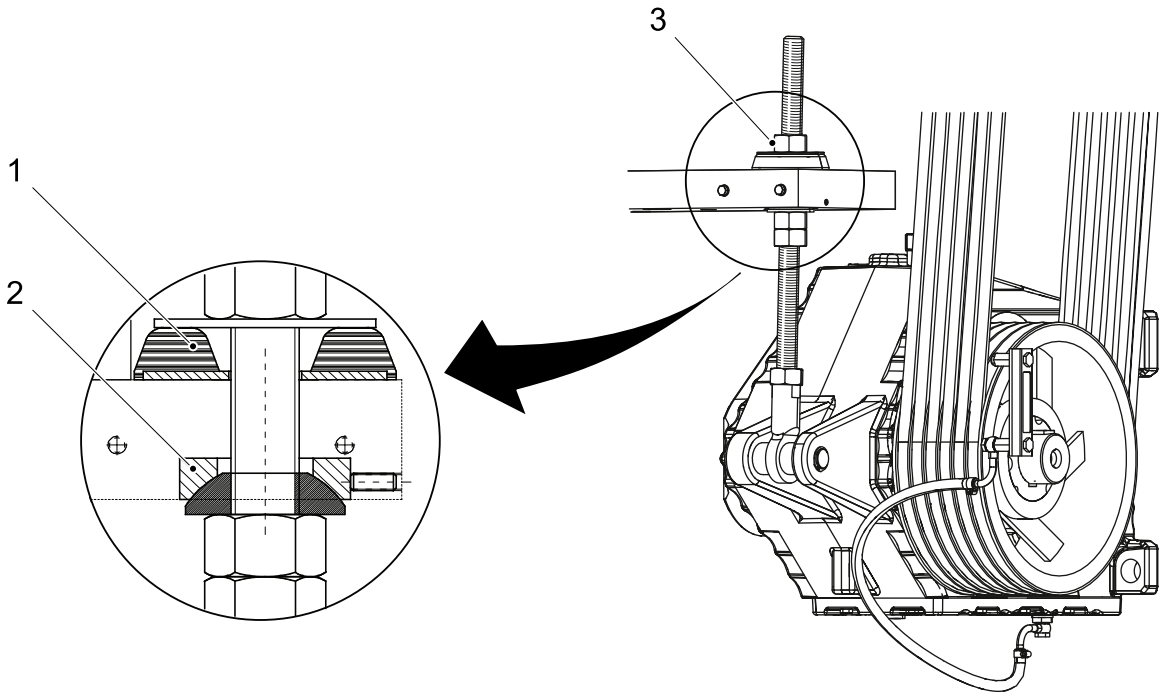

1 Rubber washer, [48]
2 Axial bearing, [47]
3 Nut, [13]

2.10 Product Connections

2.10.1 Inlet

2.10.1-1 Inlet - Change Product Connection Gaskets

a) Change the gasket (2) and gasket (3) for the inlet product connection.

Note! Make sure to install the damper (1) in vertical position.

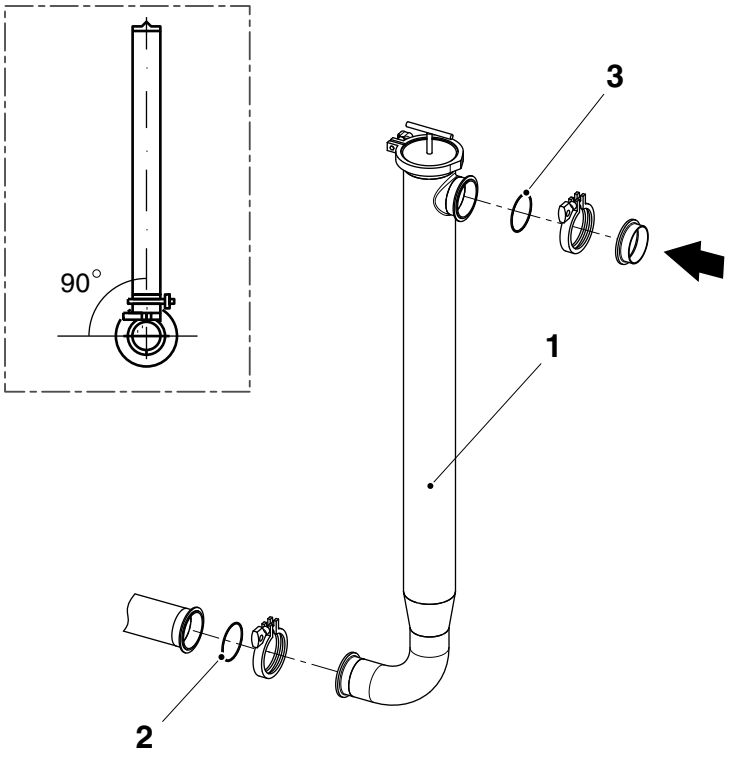

1 Damper, [4]
2 Gasket, [3]
3 Gasket, [9]

2.10.1.1 Pressure Transmitter (Option 48)

2.10.1.1-1 Pressure Transmitter - Description

The Cerabar PMP55 is a pressure transmitter for measuring the inlet product pressure.

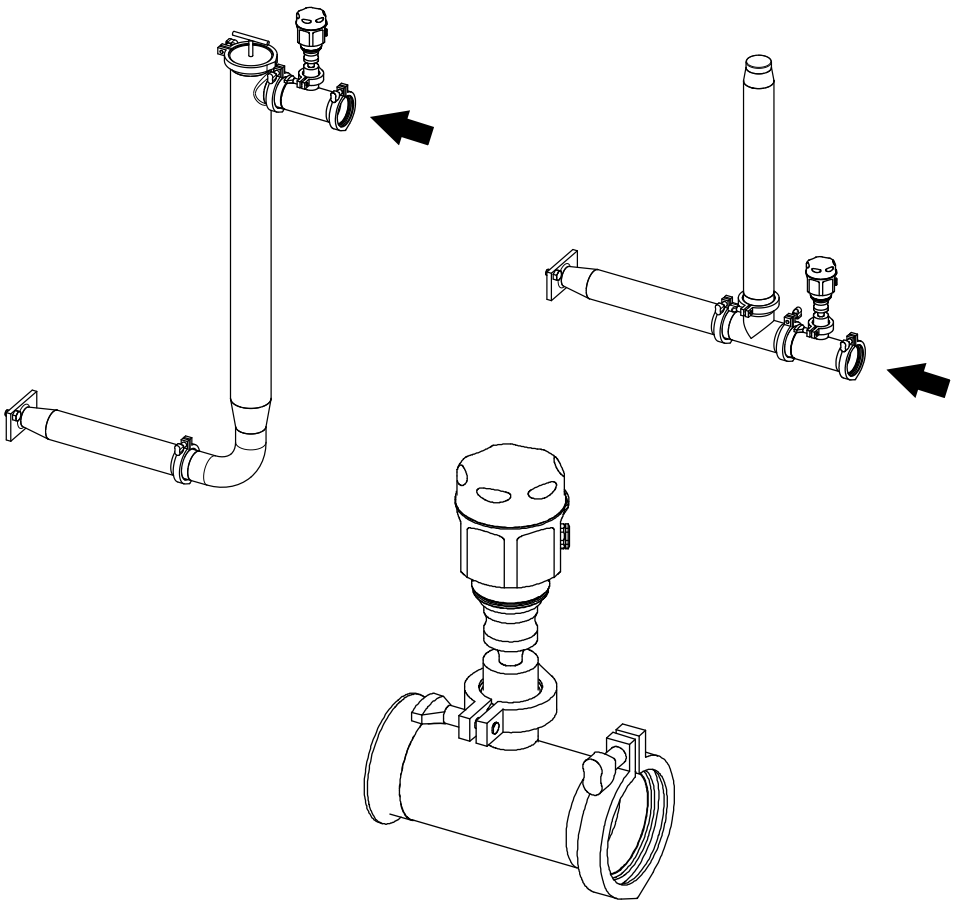

2.10.1.1-2 Pressure Transmitter - Change

WARNING

Risk of injury!

Make sure that the pipelines are drained and free from media before changing the transmitter! Never change the transmitter when it is hot!

WARNING

Risk of injury!

Shut off the power supply before changing the transmitter!

a) Disconnect the transmitter wires at the plug.

b) Remove the transmitter from the process connection.

c) Change the transmitter.

d) Reassemble in reverse order.

PMP 55

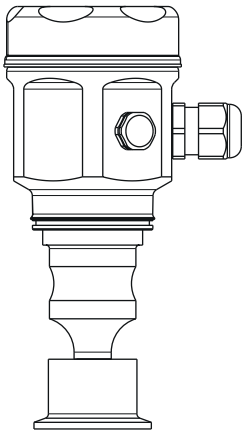

2.10.2 Outlet

2.10.2-1 Outlet - Change Product Connection Gaskets

a) Change the gasket (1) and gasket (3) for the outlet product connection.

Note! Make sure to install the damper (2) in vertical position.

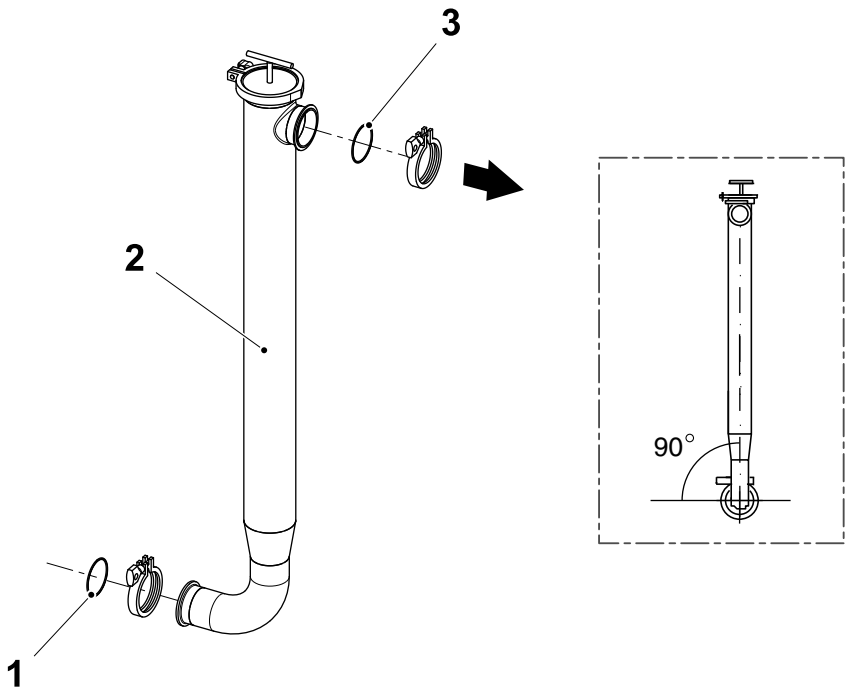

1 Gasket, [17]
2 Damper, [18]
3 Gasket, [23]

2.11 Electrical System

2.11.1 Wiring Diagram

2.11.2 Box 1 - Power

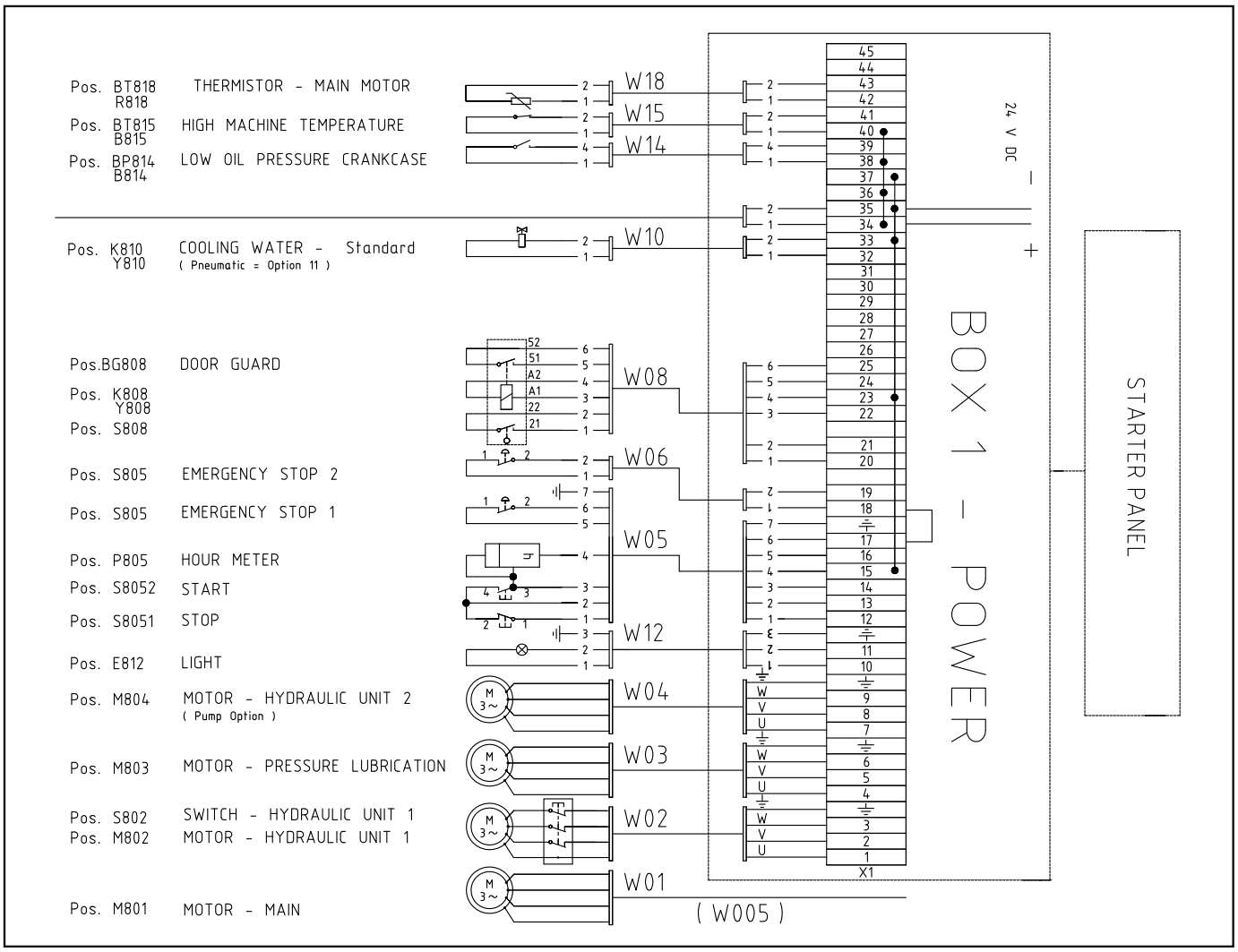

W01	M801	Motor - Main
W02	M802 S802	Motor - Hydraulic Unit 1 Switch - Hydraulic Unit 1
W03	M803	Motor - Pressure lubrication
W04	M804	Motor - Hydraulic Unit 2 (Option 40, 41, Pump)
W05	S8051 S8052 P805 S805	Stop Start Hour meter Emergency Stop 1
W06	S806	Emergency Stop 2
W08	BG808 K808 (Y808) S808	Door guard

(Cont'd)

(Cont'd)

W10	K810 (Y810)	Cooling Water - Standard (Pneumatic = Option 11)
W12	E812	Light
W14	BP814 (B814)	Low Oil Pressure - Crankcase
W15	BT815 (B815)	High Machine Temperature
W18	BT818 (R818)	Thermistor in Main Motor

2.11.3 Box 2 - Signal, Standard Homogenizer

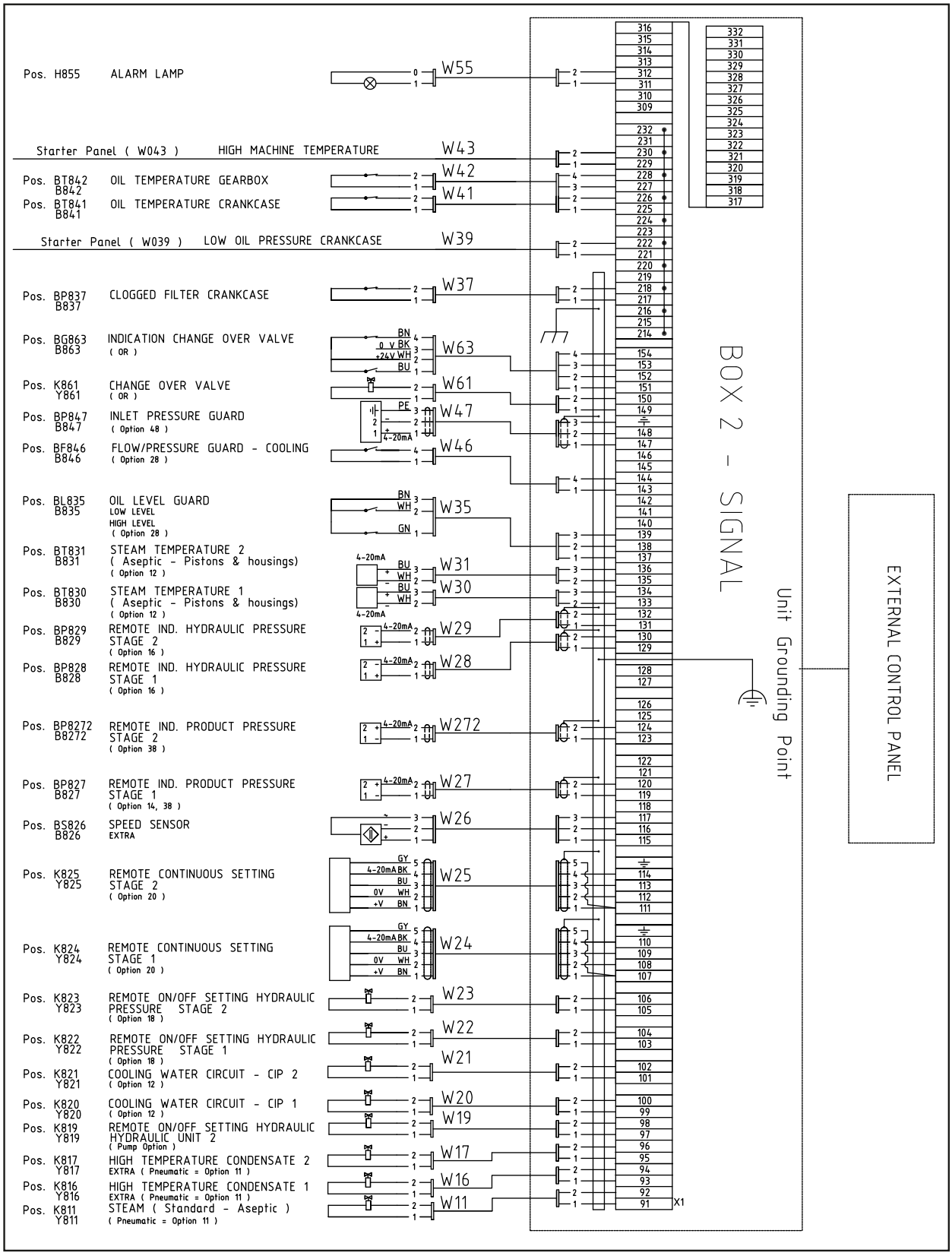

(Cont'd)

(Cont'd)

W11	K811 (Y811)	Steam - Standard Aseptic (Pneumatic = Option 11)
W16	K816 (Y816)	High Temperature Condensate 1 Extra (Pneumatic = option 11)
W17	K817 (Y817)	High Temperature Condensate 2 Extra (Pneumatic = option 11)
W19	K819 (Y819)	Remote On/Off Setting Hydraulic Unit 2 (Option 40, 41, Pump)
W20	K820 (Y820)	Cooling Water Circuit - CIP 1 (Option 12)
W21	K821 (Y821)	Cooling Water Circuit - CIP 2 (Option 12)
W22	K822 (Y822)	Remote On/Off Setting Hydraulic Pressure Stage 1 (Option 18)
W23	K823 (Y823)	Remote On/Off Setting Hydraulic Pressure Stage 2 (Option 18)
W24	K824 (Y824)	Remote Continuous Setting Stage 1 (Option 20)
W25	K825 (Y825)	Remote Continuous Setting Stage 2 (Option 20)
W26	BS826 (B826)	Speed Sensor Extra
W27	BP827 (B827)	Remote Ind. Product Pressure Stage 1 (Option 14, 38)
W272	BP8272 (B8272)	Remote Ind. Product Pressure Stage 2 (Option 38)
W28	BP828 (B828)	Remote Ind. Hydraulic Pressure Stage 1 (Option 16)
W29	BP829 (B829)	Remote Ind. Hydraulic Pressure Stage 2 (Option 16)
W30	BT830 (B830)	Steam Temperature 1 (Aseptic, Pistons & Housings - Option 12)
W31	BT831 (B831)	Steam Temperature 2 (Aseptic, Pistons & Housings - Option 12)
W35	BL835 (B835)	Oil Level Guard - High Level Oil Level Guard - Low Level (Option 28)
W46	BF846 (B846)	Flow/Pressure Guard - Cooling (Option 28)
W47	BP847 (B847)	Inlet Pressure Guard (Option 48)
W61	K861 (Y861)	Change Over Valve (OR)
W63	BG863 (Y863)	Indication Change Over Valve (OR)
W37	BP837 (B837)	Clogged Filter - Crankcase
W39	Starter Panel	Low Oil Pressure - Crankcase
W41	BT841 (B841)	Oil Temperature - Crankcase
W42	BT842 (B842)	Oil Temperature - Gearbox
W43	Starter Panel	High Machine Temperature
W55	H855	Alarm Lamp

2.11.4 Cables

2.11.4-1 Cables - Check

WARNING

Electrical hazard

Make sure the power supply to the homogenizer is shut off and prevented from accidentally being turned on.

WARNING

Failure to make these checks will cause immediate danger to life!

a) Check all cables and cable connections.

2.11.5 Electrical Cabinet (Optional)

2.11.5-1 Cooling Fan Filter - Change

a) Change the in- and outlet filters.

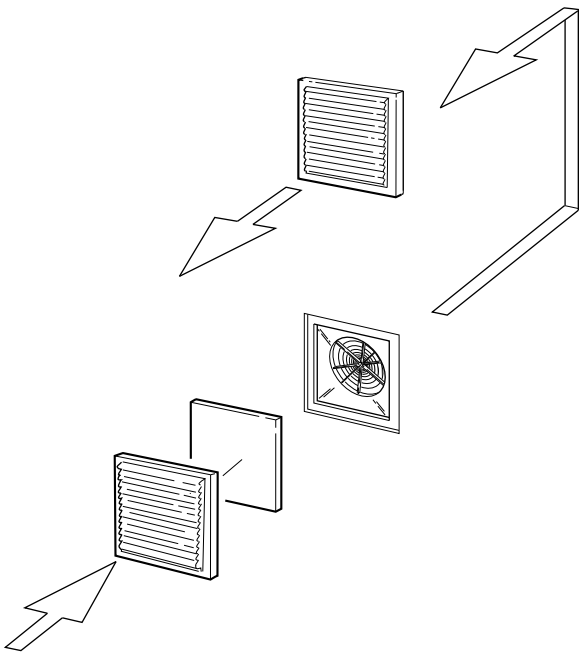

2.11.6 Temperature Transmitter

2.11.6-1 Temperature Transmitter - Check

Temperature transmitters for condensate temperature are placed below the condensate thermometer (valid only for aseptic machines).

a) Check function of the temperature transmitter(s).

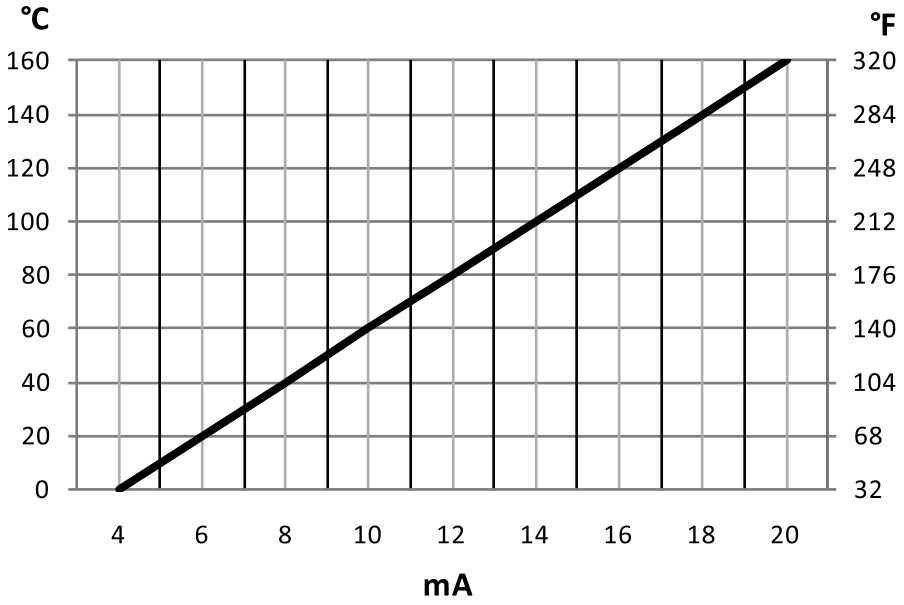

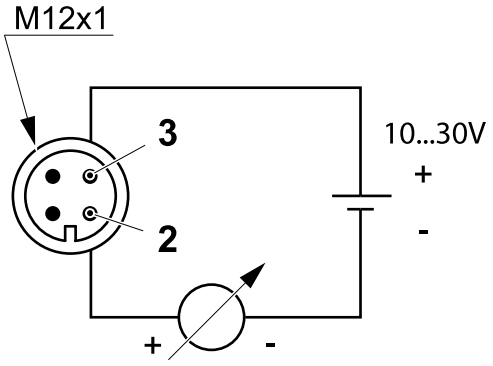

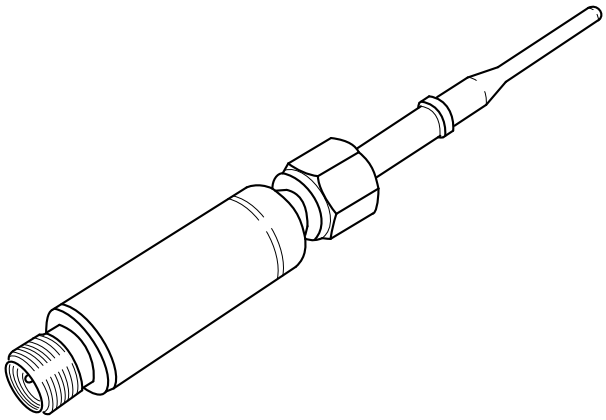

2.11.7 Emergency Stop

2.11.7-1 Emergency Stop - Check

WARNING

Failure to make these checks can result in major personal injury or damage to the machine

a) Check the function of the emergency stop button (1).

b) Press the emergency stop button and check:

- that the machine stops immediately.
- that the externally controlled pressure lubricating system stops.

c) Release the emergency stop button and check:

- that the machine does not start when the button is pulled out.

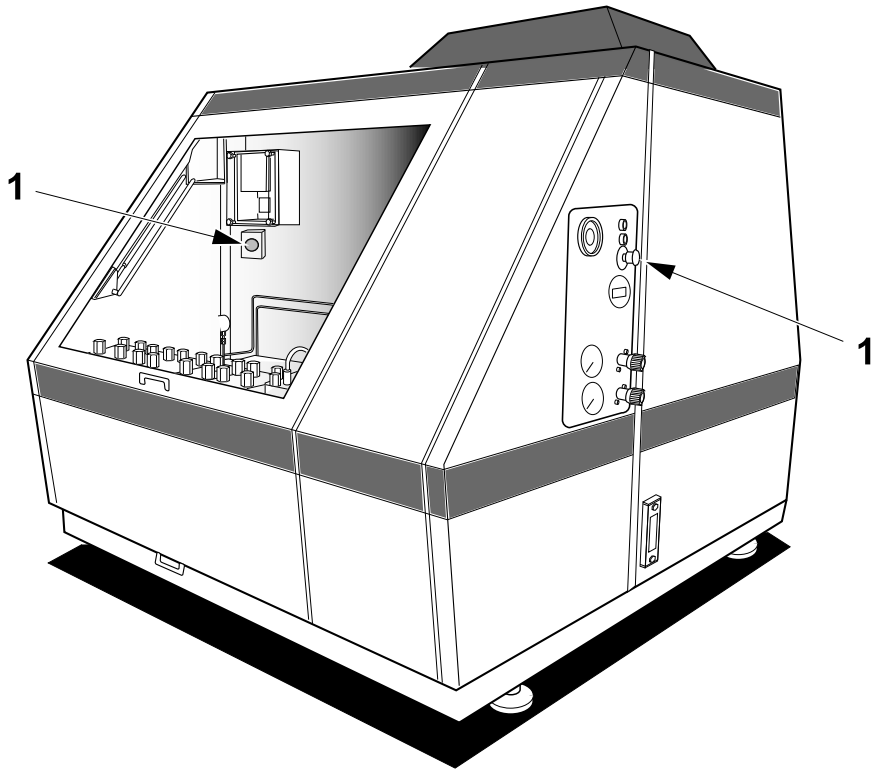

1 Emergency stop button

2.11.8 Alarm System

2.11.8-1 Alarm System - Check

CAUTION
Failure to make these checks can result in damage to the machine

a) Check:
- that the alarm lamp is lit when an alarm is activated
- that the indication for respectively alarm is in function

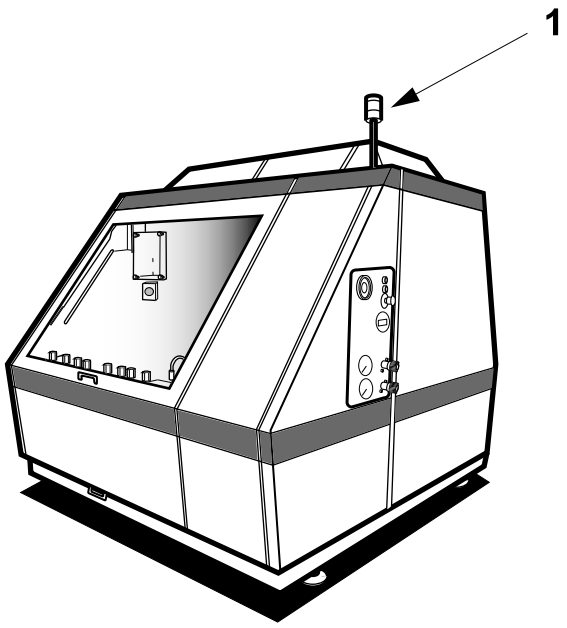

1 Alarm lamp

2.12 Miscellaneous

2.12.1 Tools

2.12.1.1 Tools included in tool kit

Note! Only the variants of tools used for the machine described in this manual are listed below.

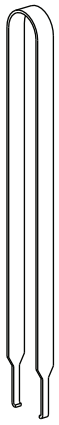	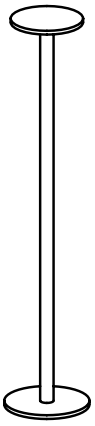	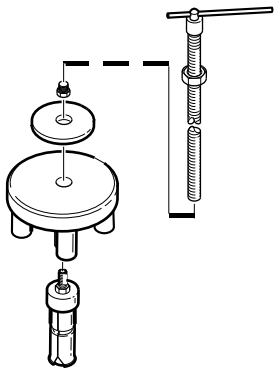
Usage: Valves See activities: 2.4.2-1 Valve Cartridge - Remove, 2.4.2-2 Valve Cartridge - Assemble	Usage: Valves See activity: 2.4.2-2 Valve Cartridge - Assemble	Usage: Valves See activity: 2.4.2-1 Valve Cartridge - Remove

2.12.2 Lubrication

2.12.2.1 Recommended Oil

Crankcase			
Recommended oil: Circulation/gearbox oils with EP additives which do not harm slidebearings (yellow metals)			
Mineral type		**Standard**	
Supplier	**Type**	**Viscosity***	
BP/Castrol	Energol GR-XP	220	
Exxon/Mobil	Mobilgear 600 XP	220	
Shell	Omala S2 B	220	
Klüber	Klüberoil GEM 1	220	
Synthetic Type**		**Standard**	**Heavy Duty********
Supplier	**Type**	**Viscosity***	
BP/Castrol	Alphasyn EP	220	460
Exxon/Mobil	SHC 630-634	220	460
Shell	Morlina S4 B	220	460
Klüber	Klübersynth GEM 4 N	220	460
Food GradeType***		**Standard**	**Heavy Duty********
Supplier	**Type**	**Viscosity***	
BP/Castrol	Optileb GT	220	460
Exxon/Mobil	SHC Cibus	220	460
Fuchs	Fuchs Cassida Fluid GL	220	460
Klüber	Klüberoil 4 UH1	220	460
Tetra Pak	Lubricant H1-0540, PAO v220	220	

* Viscosity in mm^2/sec (cSt) at 40°C (104°F)

** A synthetic oil for the crank case must be of PAO (poly alfa olefine) type, like the Omala, that is mixable with mineral oils and does not affect rubber, sealings and paint.

*** Conform with FDA 21 CFR 178.3570 and classified in NSF H1.

**** Heavy Duty. Start sequence with high load and low r.p.m.

Note! Green oils is for the time being not available, but for some viscosities, and their lubrication performance is not yet good enough for use in our type of heavy duty machines.

(Cont'd)

(Cont'd)

Gearbox		
Recommended oil: Gearbox oil		
Mineral type		
Supplier	**Type**	**Viscosity***
BP/Castrol	Energol GR-XP	320
Exxon/Mobil	Mobilgear 600 XP	320
Shell	Omala S2 B	320
Klüber	Klüberoil GEM 1	320
Synthetic Type**		
Supplier	**Type**	**Viscosity***
BP/Castrol	Enersyn HTX	220-320
Exxon/Mobil	SHC 630-632	220-320
Shell	Morlina S4 B	220-320
Klüber	Klübersynth GEM 4 N	220-320
Food GradeType***		
Supplier	**Type**	**Viscosity***
BP/Castrol	Optileb GT	220-320
Exxon/Mobil	SHC Cibus	220-320
Fuchs	Fuchs Cassida Fluid GL	220-320
Klüber	Klüberoil 4 UH1	220-320
Tetra Pak	Lubricant H1-0540, PAO v220	220
Tetra Pak	Lubricant H1-0500, PAO v320	320

* Viscosity in mm^2/sec (cSt) at 40°C (104°F)

** A synthetic oil for the gearbox must be of PAO (poly alfa olefine) type, like the Omala, that is mixable with mineral oils and does not affect rubber, sealings and paint. If the gearbox temperatur is kept to max. 70 °C (158°F), 220 cST is sufficient.

*** Conform with FDA 21 CFR 178.3570 and classified in NSF H1.

(Cont'd)

(Cont'd)

Hydraulic unit		
Recommended oil: Hydraulic oil		
Mineral type		
Supplier	**Type**	**Viscosity***
BP/Castrol	Bartran	68
Exxon/Mobil	Mobil DTE Excel	68
Shell	Tellus S2 M	68
Klüber	Lamora HLP 68	68
Synthetic Type**		
Supplier	**Type**	**Viscosity***
BP/Castrol	-	-
Exxon/Mobil	Mobil SHC 526	68
Shell	Tellus S4 ME	68
Klüber	Klüberfood 4 NH1	68
Food GradeType***		
Supplier	**Type**	**Viscosity***
BP/Castrol	Optileb HY	68
Exxon/Mobil	SHC Cibus	68
Fuchs	Fuchs Cassida Fluid HF	68
Klüber	Klüberfood 4 NH1	68

* Viscosity in mm^2/sec (cSt) at 40°C (104°F)

** A synthetic oil for the hydraulic unit must be of PAO (poly alfa olefine) type, like the Omala, that is mixable with mineral oils and does not affect rubber, sealings and paint.

*** Conform with FDA 21 CFR 178.3570 and classified in NSF H1. Required to fulfil the 3A sanitary standard.

(Cont'd)

(Cont'd)

Main drive motor		
Recommended grease		
Supplier	**Type**	**Viscosity***
BP/Castrol	Energrease LS EP 1	115
Exxon/Mobil	Mobilith SHC	100
Shell	Shell Gadus S2 V100	100
Klüber	Klüberquiet BQH 72-102	100
Food GradeType***		
Supplier	**Type**	**Viscosity***
BP/Castrol	-	-
Exxon/Mobil	Mobil grease FM 101	100
Fuchs	Fuchs Cassida RLS 2	150
Klüber	Klübersynth UH1 14-151	150

* Viscosity in mm^2/sec (cSt) at 40°C (104°F)

*** Conform with FDA 21 CFR 178.3570 and classified in NSF H1.

2.12.2.2 Oil Amount

Crankcase	**Gearbox**	**Hydraulic unit**
Approx. 100 litres (26 U.S. gallons)	Approx. 29 litres (7.7 U.S. gallons)	Approx. 9 litres (2.4 U.S. gallons)
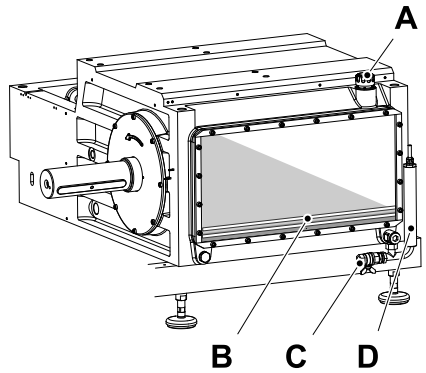	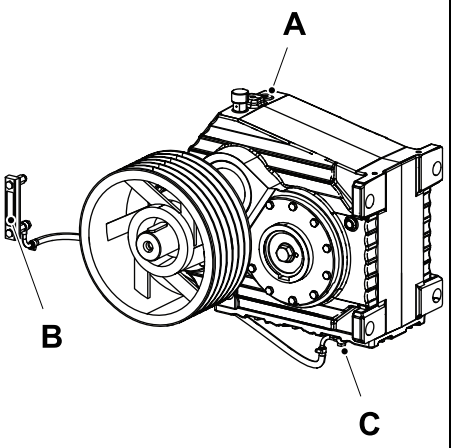	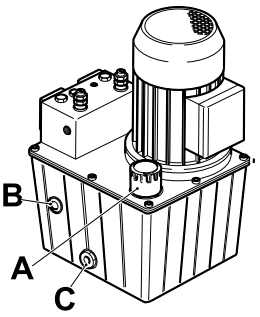
	A - Filler cap B - Level glass	C - Drain D - Level switch

2.12.3 Torque Specifications

		Piston diameter		
		45 mm	**56- 63 mm**	**70 - 90 mm**
1, [32]	**Valve cover / Pump block**	180 Nm (133 ft lbf)	180 Nm (133 ft lbf)	340 Nm (251 ft lbf)
2, [62]	**Product inlet / Pump block**	400 Nm (295 ft lbf)	80 Nm (59 ft lbf)	80 Nm (59 ft lbf)
3, [42]	**Pressure gauge flange**	140 Nm (103 ft lbf)	140 Nm (103 ft lbf)	140 Nm (103 ft lbf)
4, [95]	**Pressure gauge intermediate flange**	364 Nm (268 ft lbf)	364 Nm (268 ft lbf)	364 Nm (268 ft lbf)
5, [4]	**Homogenization head**	240 Nm (177 ft lbf)	240 Nm (177 ft lbf)	450 Nm (332 ft lbf)
6, [33]	**Pump block / Crankcase**	640 Nm (472 ft lbf)	640 Nm (472 ft lbf)	640 Nm (472 ft lbf)
7, [20]	**Piston bushing**	80 Nm (59 ft lbf)	80 Nm (59 ft lbf)	80 Nm (59 ft lbf)
8, [4]	**Plane bearing cap / Connecting rod**	200 Nm (148 ft lbf)	200 Nm (148 ft lbf)	200 Nm (148 ft lbf)

(Cont'd)

(Cont'd)

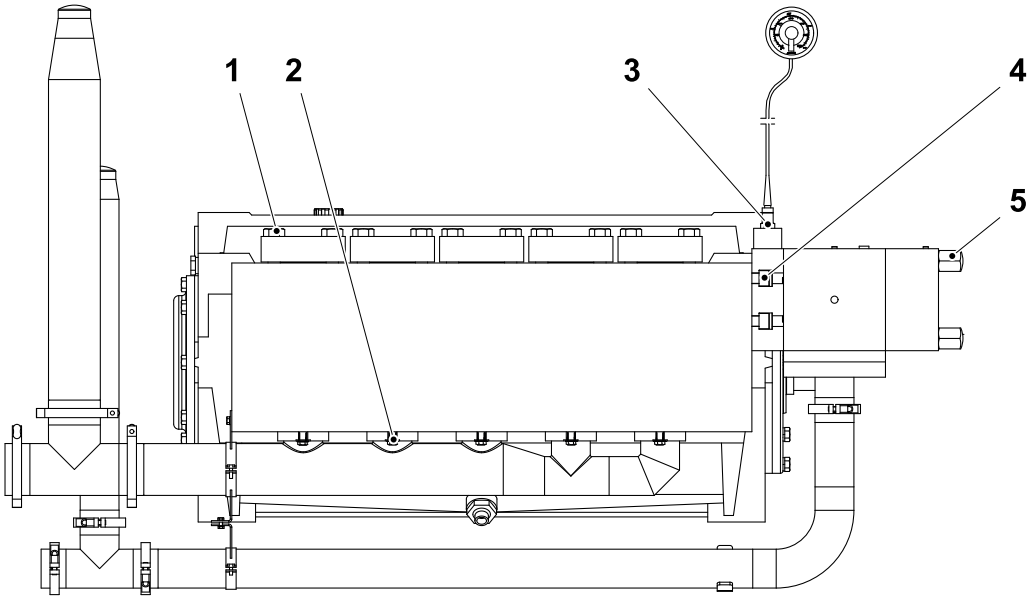

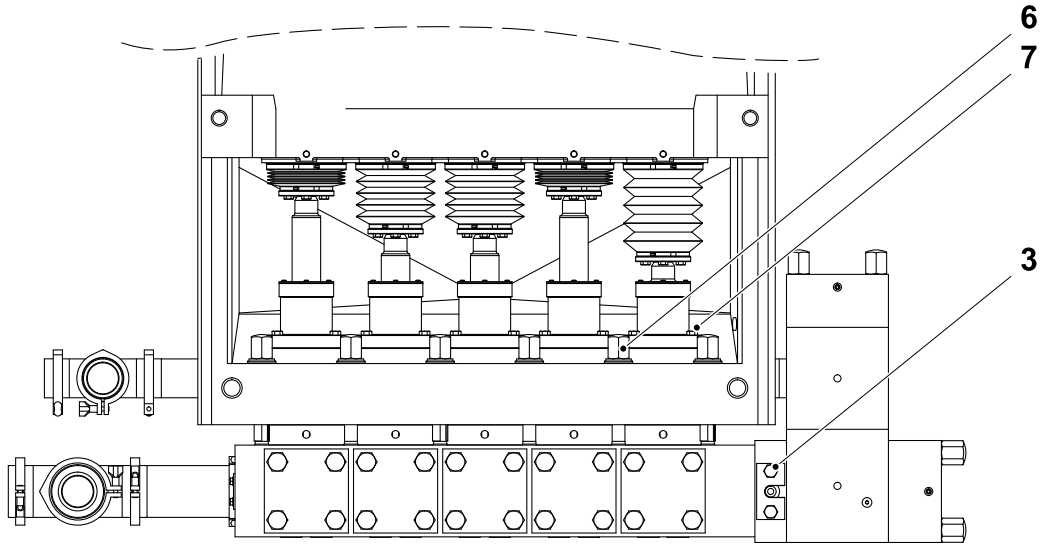

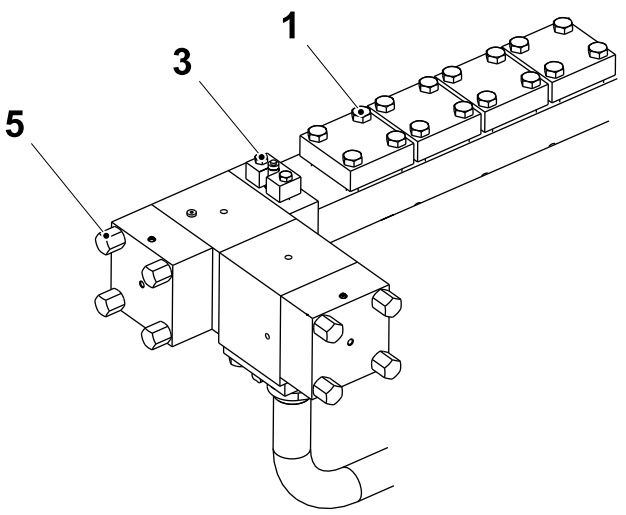

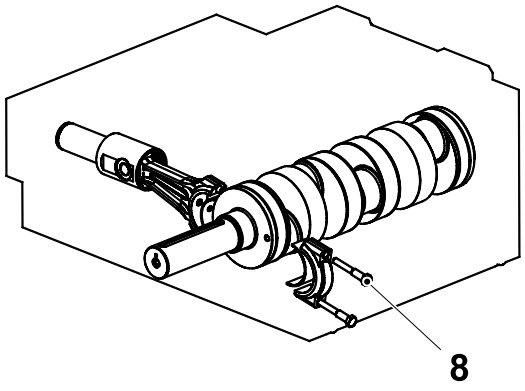

(Cont'd)

(Cont'd)

Belt pulley bushing		
Allen key size	**Torque**	
3 mm	6 Nm	(4.4 ft lbf)
5 mm	20 Nm	(15 ft lbf)
6 mm	50 Nm	(37 ft lbf)
8 mm	90 Nm	(66 ft lbf)
10 mm	115 Nm	(85 ft lbf)
12 mm	170 Nm	(125 ft lbf)
14 mm	190 Nm	(140 ft lbf)
17 mm	270 Nm	(199 ft lbf)

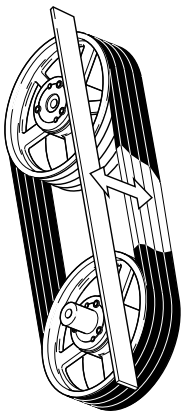

2.12.4 Trouble Shooting

Fault	**Possible cause**	**Action**
No throughput	No voltage in the drive motor	Check fuses and leads
	Motor not working	Repair or replace motor
	Crank shaft not turning	Check the drive
	Suction or discharge pipes closed	Open shut-off devices
	No feed pressure	Switch on feed pump
	Gas / air in wetend or piping	Vent wetend and piping
	Valves stuck	Disassemble the wetend and check for damages or obstacles

(Cont'd)

(Cont'd)

Fault	Possible cause	Action
Troughput to small or decreasing	Suction and discharge valves dirty or damaged	Clean / change valves
	Speed drop due to slipping V-belt	Adjust belt tension
	Gas/air in wetend or piping	Vent wetend or piping
	Gas/air in product	Deaerate product
	Capacity of feed pump to small	Increase capacity of feed pump
	Piston packing damaged	Replace piston packing
	Valves stuck	Disassemble the wetend and check for damages or obstacles
Homogenization pressure dropping or fluctuating	Suction and discharge valves dirty or damaged	Clean / change valves
	Gas/air in cylinder block, possibly in only one or two cylinders	Vent the wetend
	Hydraulic end seal leaking	Replace seal
	Pressure fluctuations or pressure drop in the hydraulic system	Check pressure adjusting valve. Vent the hydraulic system.
	Pressure gauge for homogenization pressure not working	Check, and if necessary, replace pressure gauge
Homogenization pressure not reached	Insufficient hydraulic pressure at homogenization head	Check pressure valve. Vent the hydraulic system
	Homogenization head worn	Check forcer and seat
	Pressure adjusting valve in hydraulic system is leaking	Clean the pressure adjusting valve. **Note!** The maximum set pressure must not be changed.
	Hydraulic pump worn	Replace the pump
	Hydraulic pump not rotating	Check electrical connections
Vibration in piping	Pulsation dampers full	Drain
	Valves worn	Replace valves
	Piston packing damaged	Check for product in cooling water
	To low inlet pressure	Increase pressure
	To high inlet pressure	Decrease pressure
Hammering noise during production	To low inlet pressure	Increase pressure
	Pulsation damper full	Drain
	Feed system empty while changing balance tank	Shut off the hydraulic pressure while switching tank

3 Spare Parts

This page intentionally left blank

3 SPC
Spare Parts Catalogue

Intentionally left blank

Part No	Description	Page No
6-4722 7112 80	CRANKCASE	4
6-4722 7100 80	Crankcase	6
6-4722 6921 02	Connecting Rod	8
6-4722 8602 80	COOLING SYSTEMS ASEPTIC	10
6-4722 8470 80	Cooling System Water Inlet	12
6-4722 8471 80	Cooling System Gearbox Circuit	14
6-4722 8472 80	Cooling System Crankcase Circuit	16
6-4722 8473 80	Cooling System Piston Circuit	18
6-4722 8474 80	Cooling System Condensor Circuit	20
6-4723 0849 80	Condenser Unit	22
6-4722 8475 80	Cooling System Condensor Outlet	24
6-4722 8476 80	Cooling System Cold CIP	26
6-4723 0920 80	WETEND	28
6-4723 0921 80	Piston Cartridge	30
6-4722 8161 80	Valve Cartridge	32
6-4722 7402 80	HOMOGENIZING HEAD	34
6-4722 8763 80	Flange Manometer	36
6-4722 8763 81	Flange Manometer 2nd stage	38
6-4722 9408 80	HYDRAULIC SYSTEM 2-STAGE	40
6-4723 1911 01	Hydraulic Unit	42
7-4723 1892 80	PRESSURE LUBRICATION UNIT	44
6-4723 0428 80	Filter 160	46
6-4722 7279 01	Spacer piece	48
6-4722 7109 80	FRAME WITH BODY M400	50
6-4723 0902 80	Lower Frame M400	52
6-4722 7188 80	Body	54
6-4722 8068 80	Cladding Back Side	56
6-4722 8080 80	Cladding Back Side	58
6-4722 8069 80	Cladding Back Side	60
6-4722 9294 80	Roof	62
6-4722 8071 80	Cladding Rear Door Left Complete	64
6-4722 8072 80	Cladding Rear Door Right	66
6-4722 8073 80	Cladding Front Door Left Complete	68
6-4722 9360 80	Cladding Front Door Right	70
6-4722 8075 80	Cladding Front Hood	72
6-4722 8076 80	Cladding Front Extension	74
6-4722 8077 80	Front Middle Wall	76
6-4722 8078 80	Rear Middle Wall Complete	78
6-4722 8079 80	Frame Plate	80
6-4723 1999 80	Inner Ventilation Complete M400	82
6-4722 7110 80	DRIVE UNIT	84
6-4722 9310 80	Gearbox Unit	86
6-4723 1508 01	Gearbox	88
6-4722 8166 80	Drive Unit	90
6-4723 0560 80	Motor Lubrication	92
6-4722 7111 80	PRODUCT CONNECTIONS	94
6-4722 8128 80	Inlet M400	96
6-4722 6077 01	Damper Aseptic 3”	98
6-4722 9378 80	Pressure Transmitter	100
6-4722 8129 80	Outlet	102
6-4722 6078 01	Damper Aseptic 2,5”	104
6-4722 6671 80	ELECTRICAL PARTS	106
6-4722 7353 80	Common Electric Parts	108
6-4723 1844 80	Motor Flange - Siemens	110
6-4723 1583 80	Complete Power Box	112
6-4723 1404 80	Connection Box Power	114
6-4723 1584 80	Complete Control Box	116
6-4723 1410 80	Connection Box Control	118
6-4722 9033 80	Complete Alarm Box	120
6-4722 9009 80	Alarm Box	122
6-4723 1428 80	Cabling M400	124
6-4722 6575 80	LABELS	126
6-4722 6660 80	COMMISSIONING KIT	128
6-4722 7116 80	Tools	130
6-4722 8025 83	Standard Tools	132

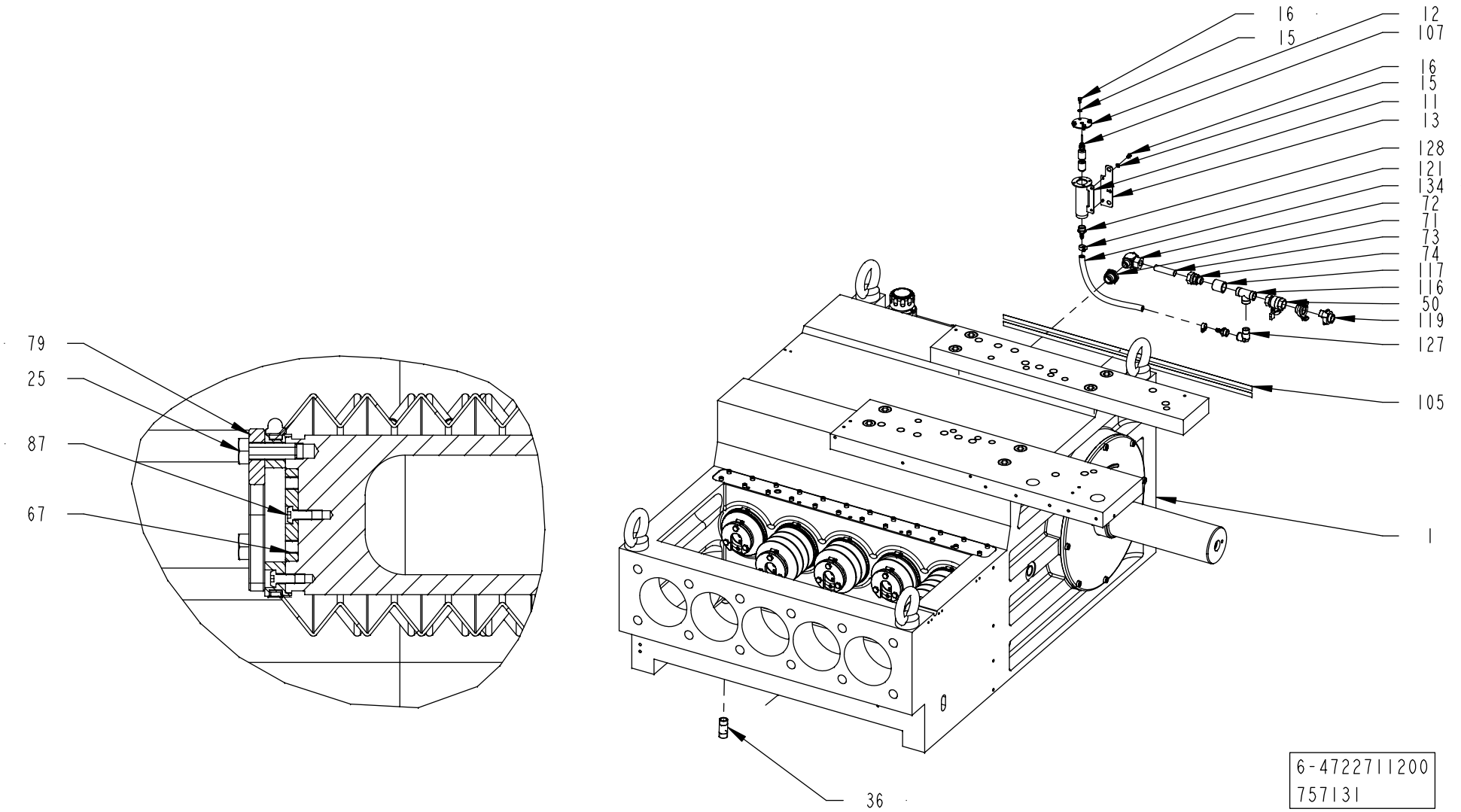
16
15
12
107
16
15
11
13
128
121
134
72
71
73
74
117
116
50
119
127
105
1
79
25
87
67
36
6-4722711200
757131

Pos	Part No	SP h	UN	Qty	Description	Page No
1	6-4722 7100 80		PC	1	Crankcase complete M400	
11	6-4723 2125 01		PC	1	LEVEL GUARD PIPE	
12	6-4723 1236 01		PC	1	LEVEL GUARD LID	
13	6-4723 2127 01		PC	1	LEVEL GUARD BRACKET, M400	
15	315105-0153		PC	6	Washer plain, 6,4x12x1,5 A4 BRB	
16	312105-0364		PC	6	Screw, M6S ISO 4017 M6x10 A4 80	
25	312105-0495		PC	15	Screw, M6S ISO 4017 M10x30 A4 80	
36	6-4722 6943 01		PC	1	Nipple pipe 3/4”	
50	6-4723 0989 01		PC	1	Ball valve R 3/4”	
67	6-4722 2455 01		PC	5	Plate M30, M300, M350, M400	
71	90458-1780		PC	1	Bushing, Int/Ext, G1-G1/2 Eolastic	
72	342796-0118		PC	1	Conn. Banjo,WH 18-G1/2	
73	6-4722 7762 01		PC	1	Oil pipe 18x1.0 M350, M400	
74	342752-0118		PC	1	Conn. Str. GE18LREDCF	
79	6-4722 8082 03		PC	5	Piston connection ring M300, M350, M400	
87	90458-0072		PC	5	Screw ISO 7380 S M6x12 A2	
105	6-4722 9043 01		M	1,8	Stripe yellow 0.15X15MM	
107	6-4722 6926 02		PC	1	Float switch	
116	6-4722 6931 01		PC	1	T-pipe out 3/4 in 1/2 (2x)	
117	6-4722 6946 01		PC	1	REDUCER VVS 3/4” -1/2”	
119	6-4722 6935 01		PC	2	Claw connection out 3/4”	
121	342991-0101		PC	2	Hose Clip,Worm Drive Type (11)-17	
127	6-4722 6941 02		PC	1	Connection RSK 3261 out 1/2”	
128	6-4723 1166 01		PC	2	THREADED HOSE NIPPLE, G1/2-3/8	
134	6-4723 1165 01		M	0,3	OIL HOSE PN20	

Pos	Part No	SP h	UN	Qty	Description	Page No

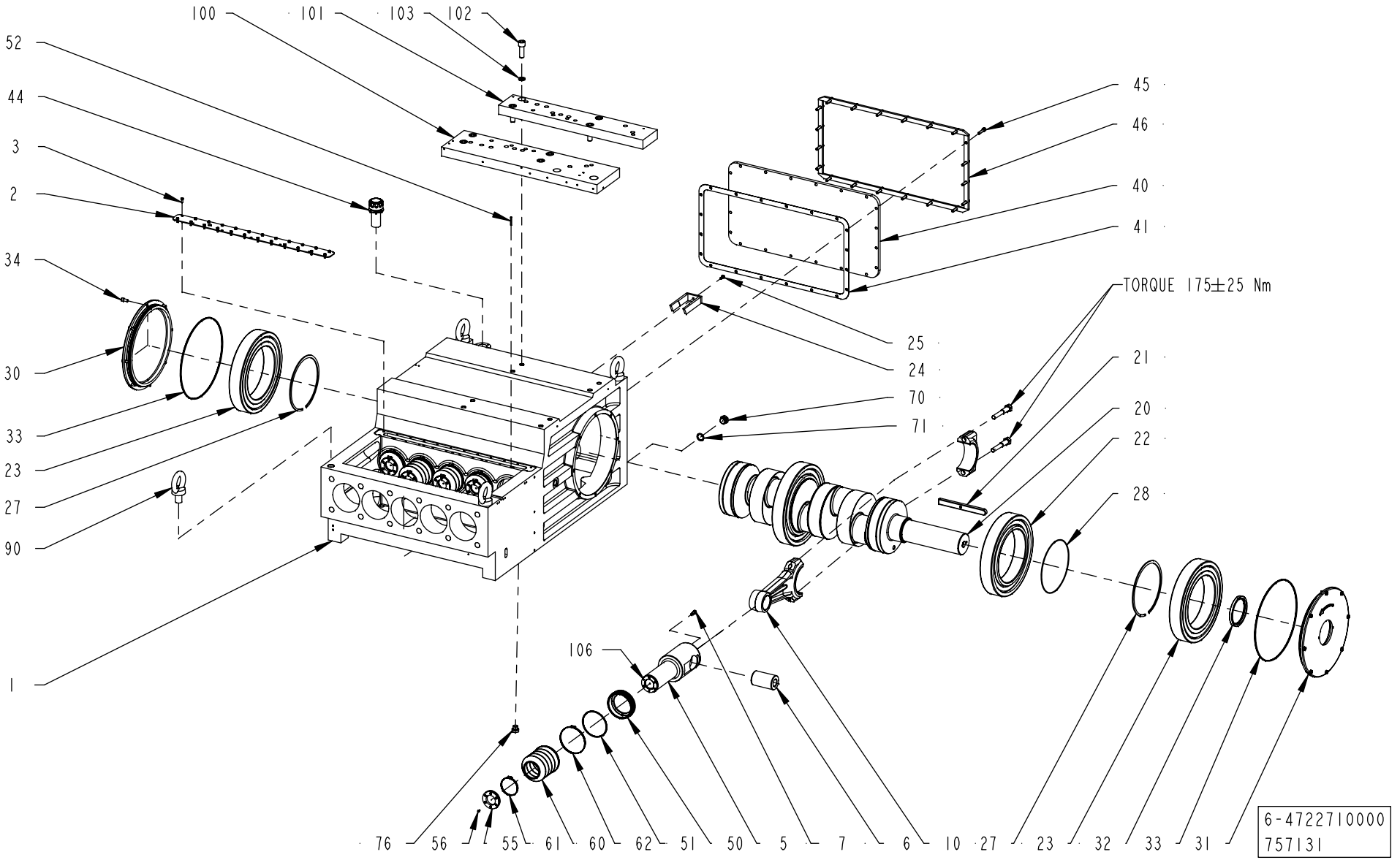
100
101
103
102
52
44
3
2
34
30
33
23
27
90
1
45
46
40
41
TORQUE 175±25 Nm
25
24
70
71
21
20
22
28
106
76
56
55
61
60
62
51
50
5
7
6
10
27
23
32
33
31
6-4722710000
757131

Pos	Part No	SP h	UN	Qty	Description	Page No
1	6-4722 9511 02		PC	1	CRANK HOUSING M400	
2	6-4722 7363 01		PC	1	Crankcase lid	
3	312115-0449		PC	24	Screw ISO4762 M8x16 A4 80	
5	6-4722 6917 02		PC	5	Cross piece head	
6	6-4722 7364 01		PC	5	CROSS HEAD BOLT M400	
7	6-4722 7365 01		PC	5	CROSS HEAD SCREW M350, M400	
10	6-4722 6921 02		PC	5	Connecting rod complete M400	
20	6-4722 7366 01		PC	1	Crank shaft M400	
21	6-4722 7367 01		PC	1	Wedge 32h9 x 18 x 315	
22	6-4722 7368 01		PC	2	Roller bearing NU1060 M400	
23	6-4722 7383 01		PC	2	Roller bearing NJ1060 M400	
24	6-4722 9512 01		PC	2	Shackle	
25	312155-0493		PC	2	Screw DIN 7991 MF6S M10x25 A4 70	
27	6-4722 7385 01		PC	2	Circlip 300	
28	6-4722 7390 01		PC	4	Lock ring 290 x 4	
30	6-4722 6918 02		PC	1	Bearing cover M400	
31	6-4722 6919 02		PC	1	Bearing flange	
32	6-4722 7386 01		PC	1	Sealing box G 140 x 170 x 12	
33	6-4722 6562 51		PC	2	O-ring 450 x 5	
34	312115-0534		PC	16	Screw ISO4762 M12x25 A4 80	
40	6-4722 9259 01		PC	1	Rear Window M400	
41	6-4723 0855 01		PC	1	Rear cover gasket M400	
44	6-4722 7389 01		PC	1	Filler cap	
45	312115-0542		PC	20	Screw ISO4762 M12x50 A4 80	
46	6-4722 9258 01		PC	1	Frame M400	
50	6-4722 6783 01		PC	5	Bellow ring rear M30	
51	6-223412 80		PC	5	O-ring 144.30x5.70 AL113 3034-83 NBR	
52	90459-0277		PC	5	Screw Hex.Sock.Set Conept.MS6SS M6x30 A2	
55	6-4722 6781 01		PC	5	Bellow ring front M30	
56	90458-0072		PC	15	Screw ISO 7380 S M6x12 A2	
60	6-4722 1989 01		PC	5	Bellows M30, M300, M350, M400	
61	6-4723 1251 03		PC	5	Worm drive clamp Ø90-110	
62	6-4723 1251 06		PC	5	Worm drive clamp Ø140-160	
70	6-4722 7296 01		PC	1	Plug 1”	
71	6-4722 7308 01		PC	1	Sealing ring 35x41	
76	6-4722 7095 01		PC	1	Plug 3/4 “	
90	318301-0132		PC	4	Lifting Eye Bolt, LT M36 FZB	
100	6-4722 7392 01		PC	1	STEEL RULER FRONT	
101	6-4722 7393 01		PC	1	STEEL RULER BACK	
102	6-4722 7391 01		PC	8	Screw MC6S 24x70	
103	6-4722 7097 02		PC	8	Washer 24.5 x 35.5 x 5.5	

Pos	Part No	SP h	UN	Qty	Description	Page No

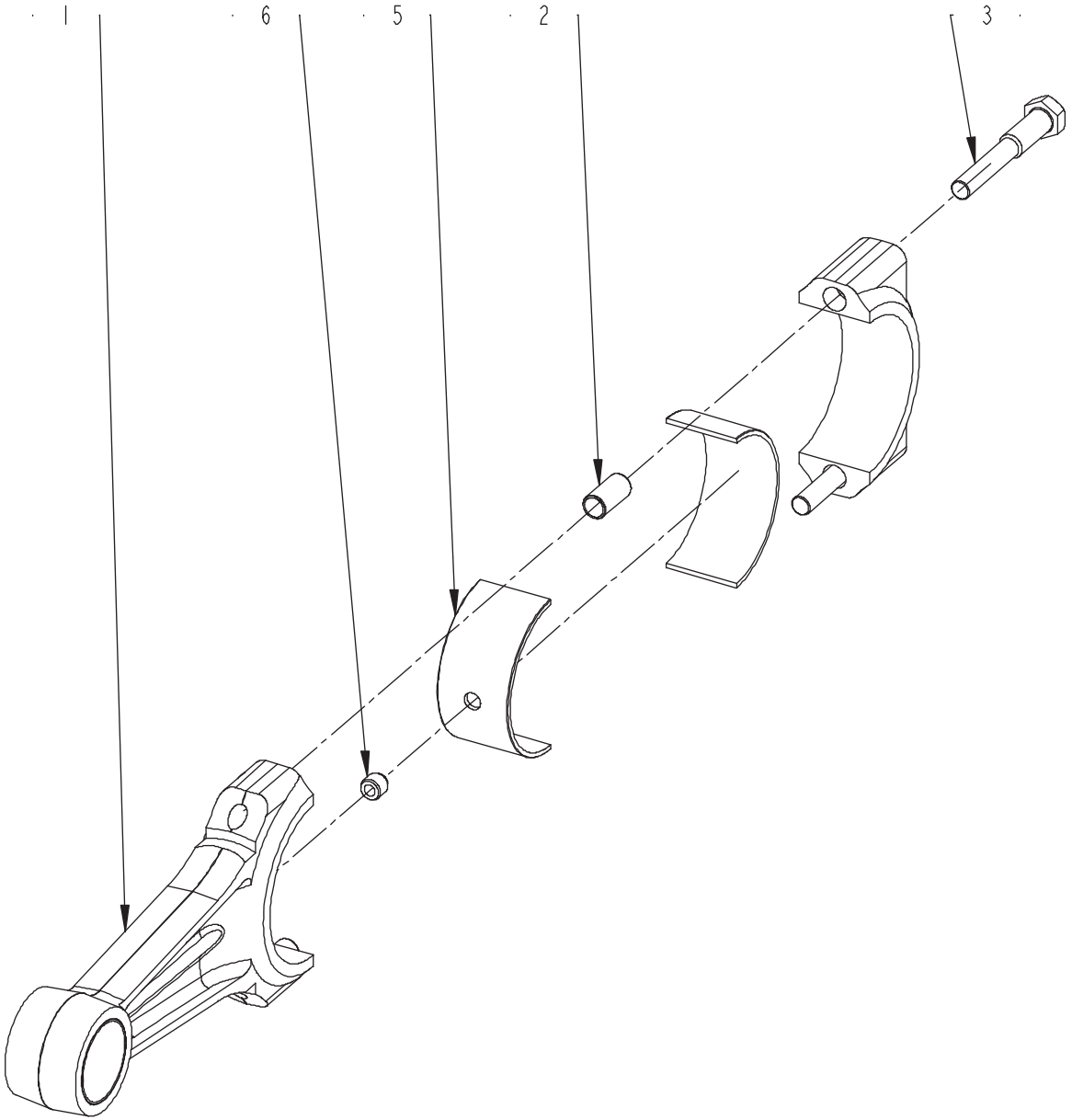

6-4722692100
499487

Pos	Part No	SP h	UN	Qty	Description	Page No
1	6-4722 7394 01		PC	5	Connecting rod M400	
2	6-4722 7395 01		PC	10	Insert	
3	6-4722 7396 01		PC	10	Screw CONNECTING ROD	
5	6-4722 7398 01		PC	5	Bearing, PLAIN M400	
6	6-4722 7399 01		PC	5	Bearing tap	

Pos	Part No	SP h	UN	Qty	Description	Page No

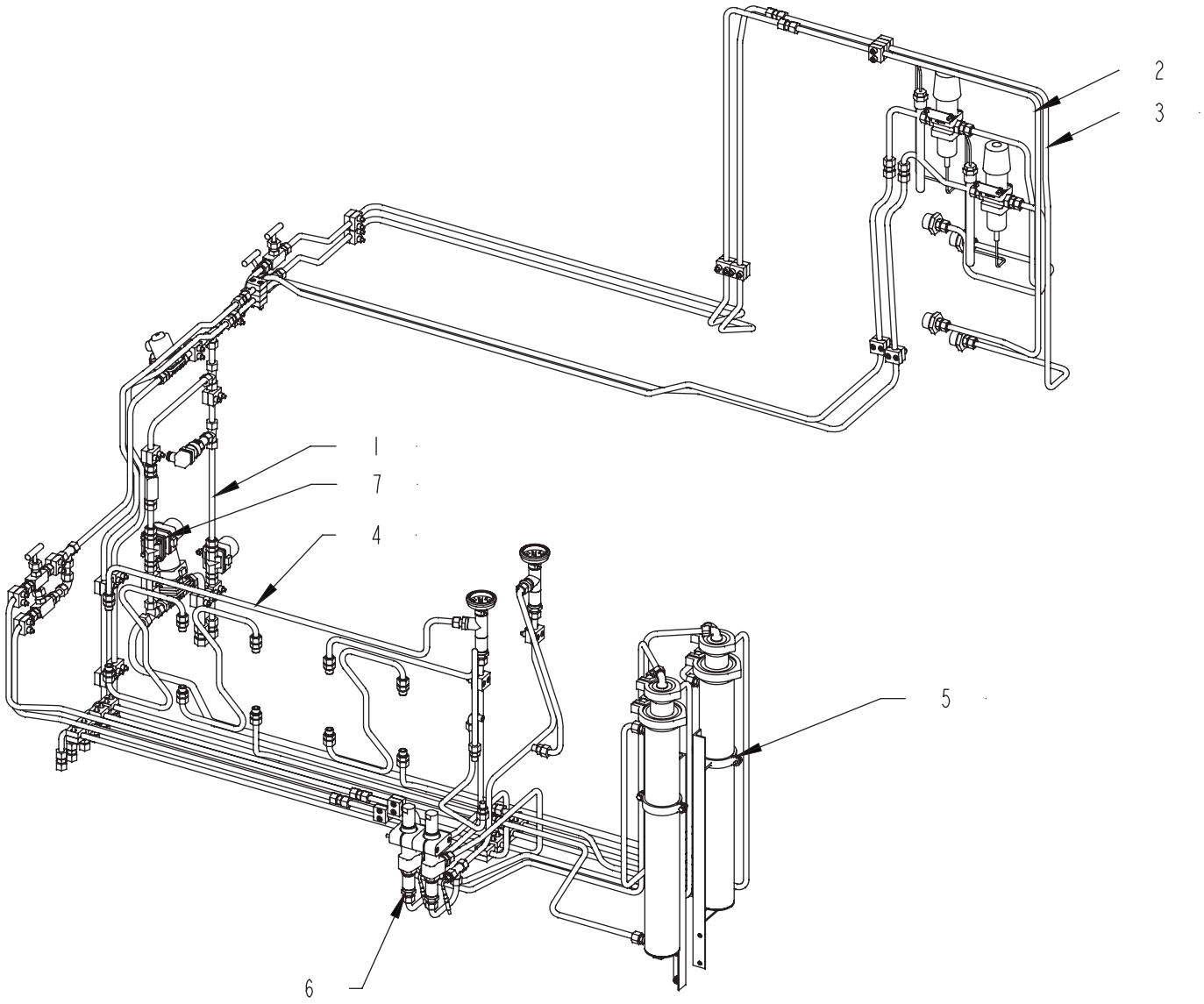

6-4722860200
746871

Pos	Part No	SP h	UN	Qty	Description	Page No
1	6-4722 8470 80		PC	1	Cooling system - Water inlet M400	
2	6-4722 8471 80		PC	1	Cooling system - Gearbox circuit M400	
3	6-4722 8472 80		PC	1	Cooling system - Crankcase circuit M400	
4	6-4722 8473 80		PC	1	Cooling system - Piston circuit M400	
5	6-4722 8474 80		PC	1	Cooling system - Condensor circuit M400	
6	6-4722 8475 80		PC	1	Cooling system - Condensor outlet M400	
7	6-4722 8476 80		PC	1	Cooling system - Cold CIP M400	
			PC	1	DRW 6-4722860200 (08);MOD 6-4722860216	

Pos	Part No	SP h	UN	Qty	Description	Page No

Cooling System Water Inlet

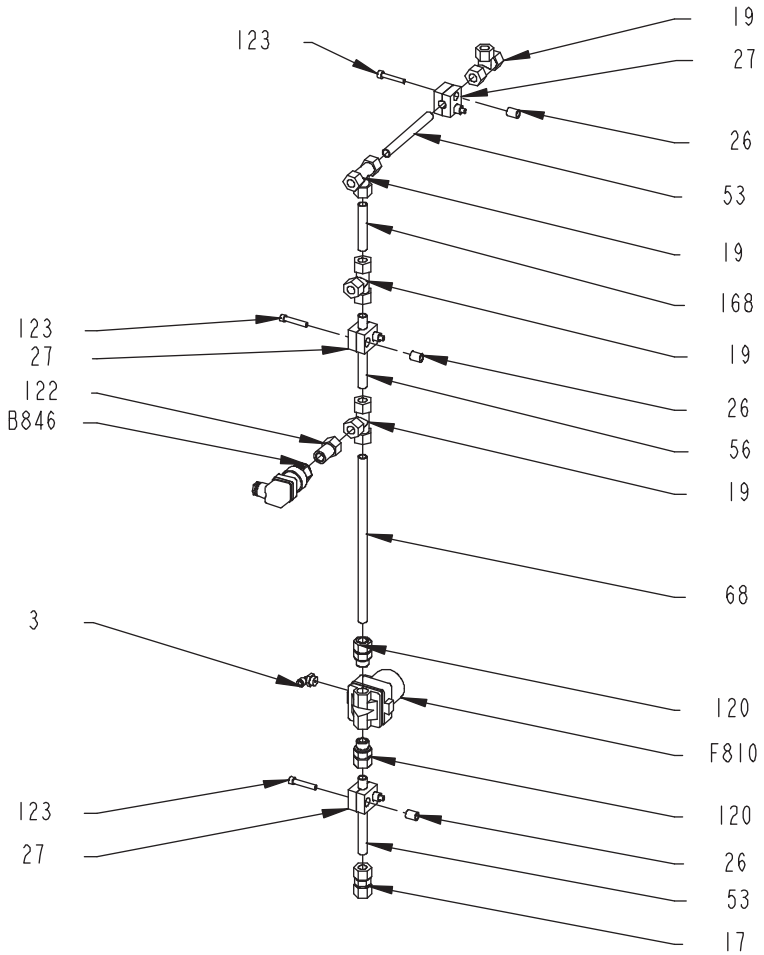

6-4722847000
589831

Pos	Part No	SP h	UN	Qty	Description	Page No
3	90458-2957		PC	1	Elbow Pipe Joint, Ext.Thread, D=6Mm-G1/4	
17	90030-0106		PC	1	Pipe Connection G 12	
19	90030-0058		PC	4	Conn. T-Pipe T12L71	
26	6-4722 6095 01		PC	6	Spacer 12 x 8.2 x 15	
27	90458-2011		PC	3	Pipe Clamp, d=12 mm, RAA112X	
53	6-4722 7680 26		PC	2	Cooling pipe Ø12x1	
56	6-4723 1232 09		PC	1	Pipe Ø12x1	
68	6-4723 1232 08		PC	1	Pipe Ø12x1	
120	6-4350 8400 78		PC	2	Straight connection GE 12 L/R3/8”	
122	6-4722 9202 01		PC	1	Screw connection	
123	312115-0376		PC	6	Screw ISO4762 M6x35 A4 80	
168	6-4723 1232 07		PC	1	Pipe Ø12x1	
F810	6-4722 5016 01		PC	1	Water valve pneum. Type 615	
B846	6-4722 7274 02		PC	1	Pressure switch 0,6 bar, SS	
			PC	1	DRW 6-4722847000 (08);MOD 6-4722847004_CIP	

Pos	Part No	SP h	UN	Qty	Description	Page No

Cooling System Gearbox Circuit

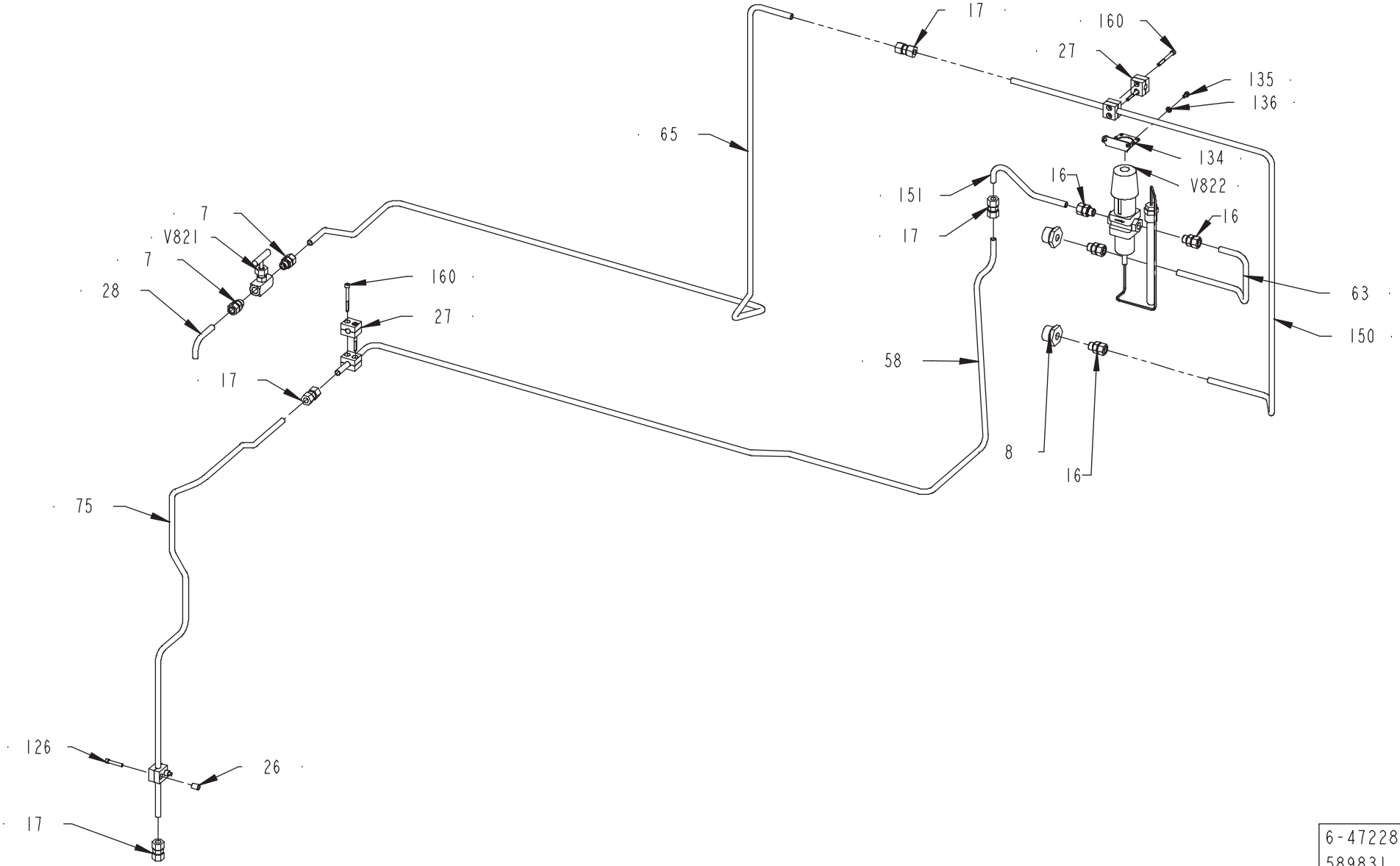

6-4722847100
589831

Pos	Part No	SP h	UN	Qty	Description	Page No
7	6-4350 8400 78		PC	2	Straight connection GE 12 L/R3/8”	
8	6-4722 7315 01		PC	2	Reducer 1” x 3/8”	
16	6-4350 8400 78		PC	4	Straight connection GE 12 L/R3/8”	
17	90030-0106		PC	4	Pipe Connection G 12	
26	6-4722 6095 01		PC	14	Spacer 12 x 8.2 x 15	
27	90458-2011		PC	9	Pipe Clamp, d=12 mm, RAA112X	
28	6-4722 7680 62		PC	1	Cooling pipe Ø12x1	
58	6-4723 0198 08		PC	1	Pipe Ø12x1	
63	6-4723 1259 01		PC	1	Pipe Ø12x1	
65	6-4723 0198 04		PC	1	Pipe Ø12x1	
75	6-4723 0198 09		PC	1	Pipe Ø12x1	
126	312115-0376		PC	10	Screw ISO4762 M6x35 A4 80	
134	90187-0311		PC	1	Bracket for 90187-0069, -0103	
135	312105-0366		PC	2	Screw, M6S ISO 4017 M6x12 A4 80	
136	315105-0153		PC	2	Washer plain, 6,4x12x1,5 A4 BRB	
150	6-4723 1259 02		PC	1	Pipe Ø12x1	
151	6-4723 0198 07		PC	1	Pipe Ø12x1	
160	312115-0382		PC	4	Screw ISO4762 M6x60 A4 80	
V821	90459-2629		PC	1	Needle Valve 3/8” BSP	
V822	90187-0069		PC	1	Temp. Contr. Valve, R3/8 25-68øC	
			PC	1	DRW 6-4722847100 (02);MOD 6-4722847102	

Pos	Part No	SP h	UN	Qty	Description	Page No

Cooling System Crankcase Circuit

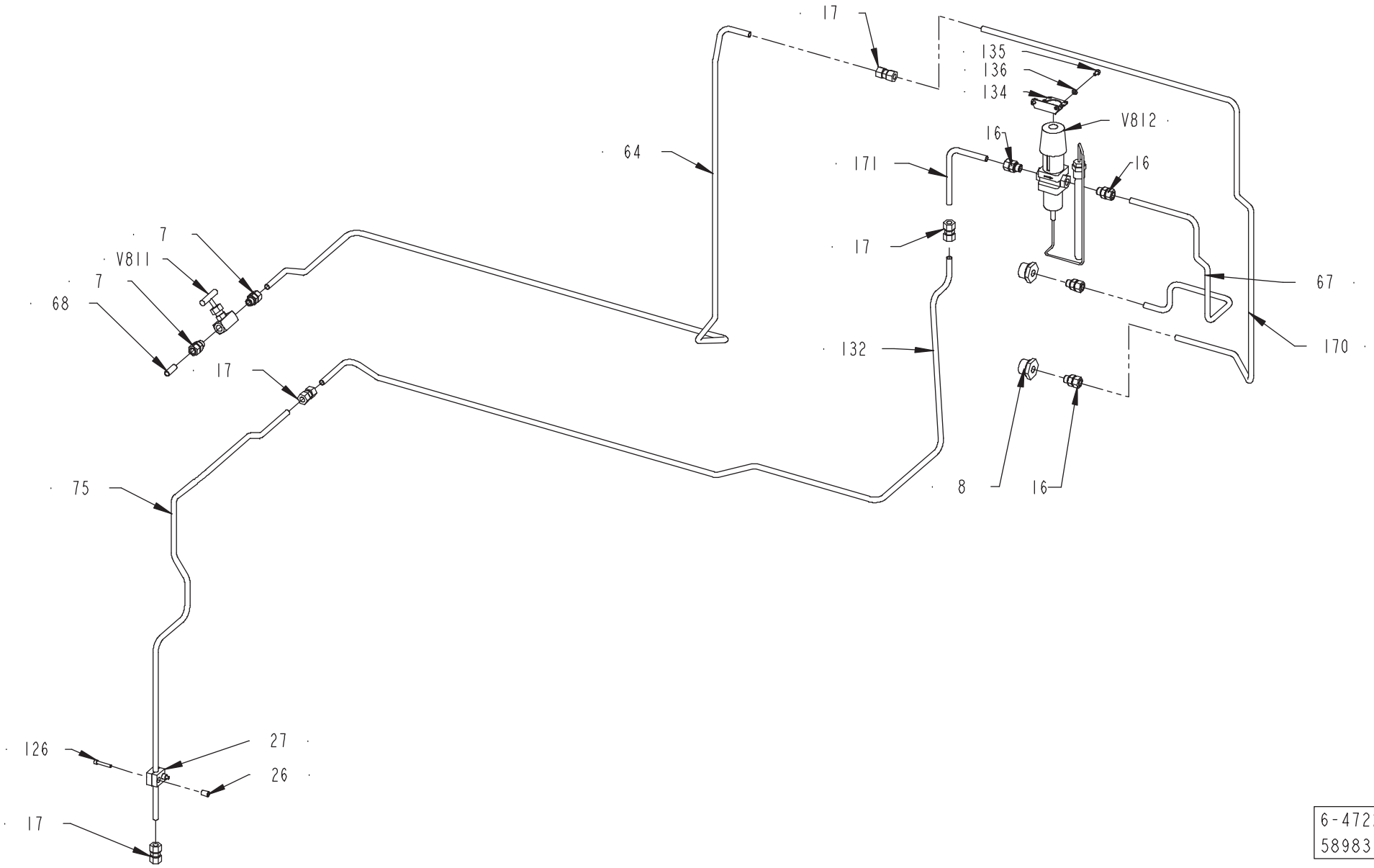

6-4722847200
589831

Pos	Part No	SP h	UN	Qty	Description	Page No
7	6-4350 8400 78		PC	2	Straight connection GE 12 L/R3/8”	
8	6-4722 7315 01		PC	2	Reducer 1” x 3/8”	
16	6-4350 8400 78		PC	4	Straight connection GE 12 L/R3/8”	
17	90030-0106		PC	4	Pipe Connection G 12	
26	6-4722 6095 01		PC	10	Spacer 12 x 8.2 x 15	
27	90458-2011		PC	5	Pipe Clamp, d=12 mm, RAA112X	
64	6-4723 0199 04		PC	1	Pipe Ø12x1	
67	6-4723 1259 03		PC	1	Pipe Ø12x1	
68	6-4722 7680 36		PC	1	Cooling pipe Ø12x1	
75	6-4723 0199 06		PC	1	Pipe Ø12x1	
126	312115-0376		PC	10	Screw ISO4762 M6x35 A4 80	
132	6-4723 0199 03		PC	1	Pipe Ø12x1	
134	90187-0311		PC	1	Bracket for 90187-0069, -0103	
135	312105-0366		PC	2	Screw, M6S ISO 4017 M6x12 A4 80	
136	315105-0153		PC	2	Washer plain, 6,4x12x1,5 A4 BRB	
170	6-4723 1259 04		PC	1	Pipe Ø12x1	
171	6-4723 0199 02		PC	1	Pipe Ø12x1	
V811	90459-2629		PC	1	Needle Valve 3/8” BSP	
V812	90187-0069		PC	1	Temp. Contr. Valve, R3/8 25-68øC	
			PC	1	DRW 6-4722847200 (02);MOD 6-4722847202	

Pos	Part No	SP h	UN	Qty	Description	Page No

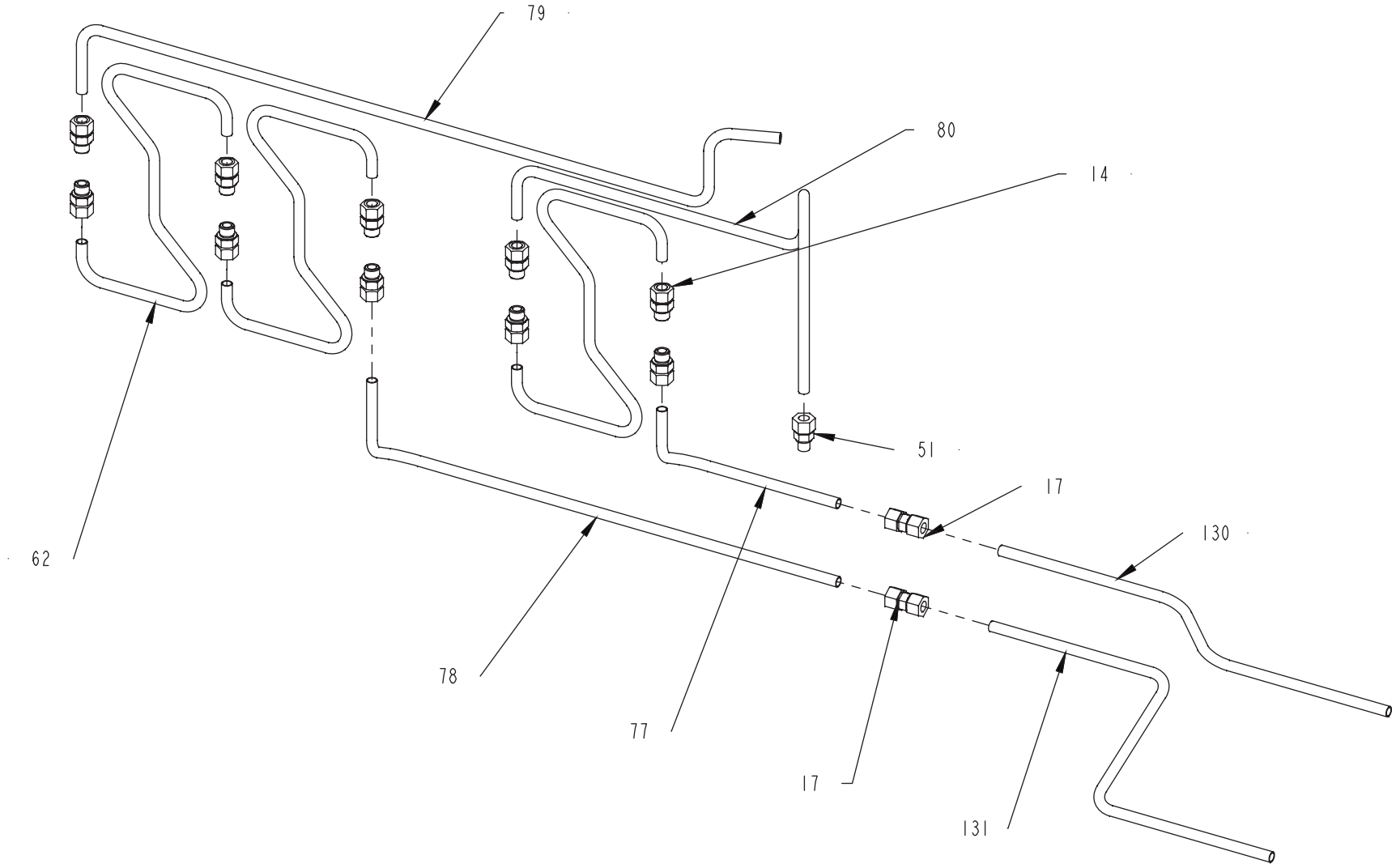
79
80
14
51
17
130
62
78
77
17
131
6-4722847300
746871

Pos	Part No	SP h	UN	Qty	Description	Page No
14	6-4350 8400 78		PC	10	Straight connection GE 12 L/R3/8”	
17	90030-0106		PC	2	Pipe Connection G 12	
51	90030-0590		PC	1	Conn. Str. GE12LR1/4ED71	
62	6-4722 7680 44		PC	3	Cooling pipe Ø12x1	
77	6-4722 7680 47		PC	1	Cooling pipe Ø12x1	
78	6-4722 7680 11		PC	1	Cooling pipe Ø12x1	
79	6-4722 7680 49		PC	1	Cooling pipe Ø12x1	
80	6-4722 7680 48		PC	1	Cooling pipe Ø12x1	
130	6-4722 9894 06		PC	1	Cooling pipe Ø12x1	
131	6-4722 9894 05		PC	1	Cooling pipe Ø12x1	
			PC	1	DRW 6-4722847300 (05);MOD 6-4722847305	

Pos	Part No	SP h	UN	Qty	Description	Page No

Cooling System Condensor Circuit

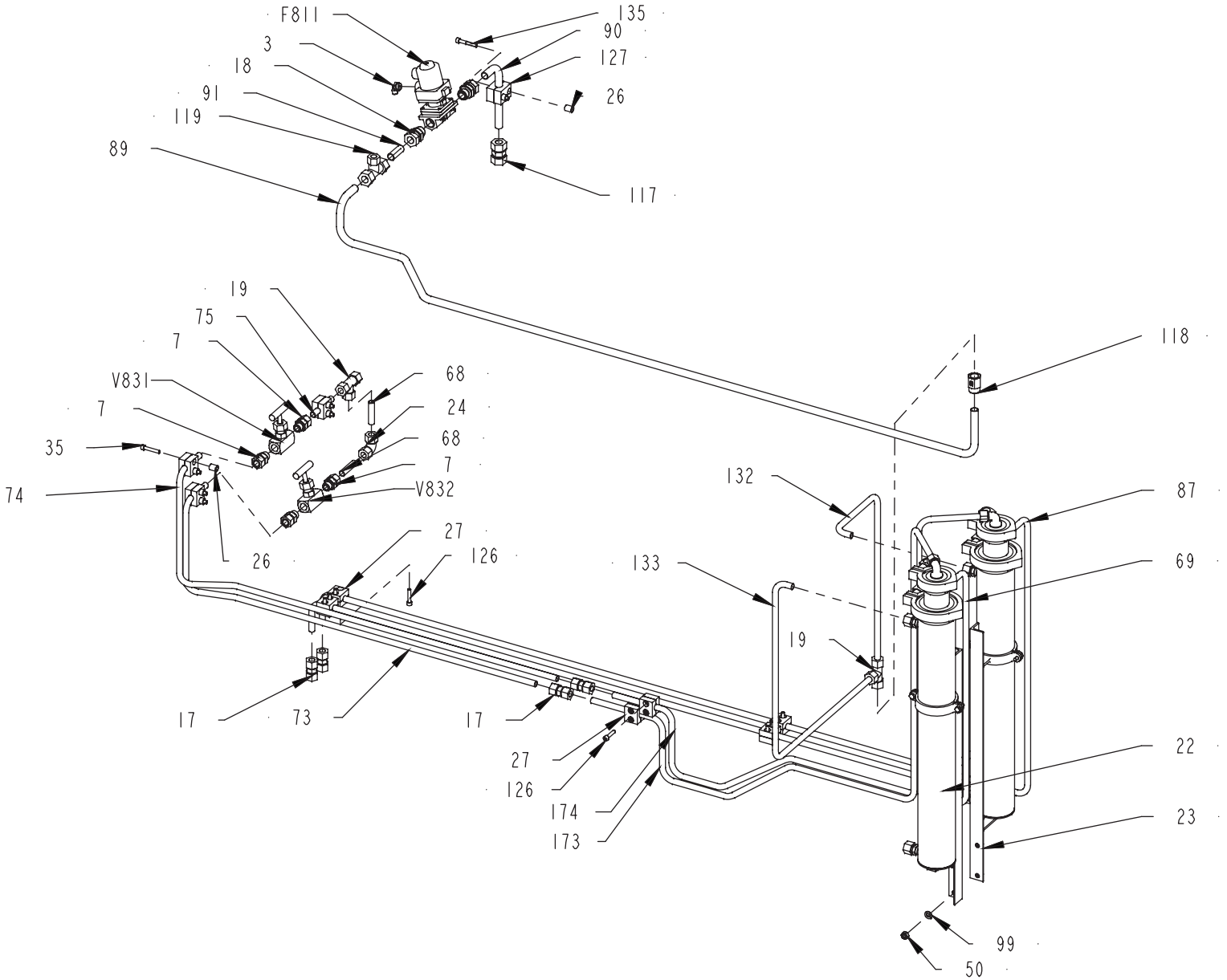

6-4722847400
746871

Pos	Part No	SP h	UN	Qty	Description	Page No
3	90458-2957		PC	1	Elbow Pipe Joint, Ext.Thread, D=6Mm-G1/4	
7	6-4350 8400 78		PC	4	Straight connection GE 12 L/R3/8”	
17	90030-0106		PC	4	Pipe Connection G 12	
18	90030-0188		PC	2	Conn. Str. GE15LRED71	
19	90030-0058		PC	2	Conn. T-Pipe T12L71	
22	6-4723 0849 80		PC	2	Condensor unit	
23	6-4722 8053 01		PC	2	Holder for aseptic cooler	
24	90030-0096		PC	1	Elbow connection 12	
26	6-4722 6095 01		PC	8	Spacer 12 x 8.2 x 15	
27	90458-2011		PC	9	Pipe Clamp, d=12 mm, RAA112X	
35	312115-0376		PC	6	Screw ISO4762 M6x35 A4 80	
50	312605-0318		PC	4	Hexagon Nut, M6M M8 A280	
68	6-4722 7680 05		PC	2	Cooling pipe Ø12x1	
69	6-4722 9894 04		PC	1	Cooling pipe Ø12x1	
73	6-4723 2429 03		PC	1	Pipe Ø12x1	
74	6-4723 2429 01		PC	1	Pipe Ø12x1	
75	6-4722 7680 43		PC	1	Cooling pipe Ø12x1	
87	6-4722 7680 68		PC	1	Cooling pipe Ø12x1	
89	6-4723 1235 03		PC	1	Pipe Ø15x1	
90	6-4723 1235 01		PC	1	Pipe Ø15x1	
91	6-4723 1159 02		PC	1	Pipe Ø15x1	
99	315105-0165		PC	4	FWAS080G0-0S, Washer plain	
117	342727-0214		PC	1	Pipe Connection G 15	
118	6-4723 0501 01		PC	1	Adapter GAI 15L M18x1.5 SS	
119	6-4722 9489 01		PC	1	T-pipe conn. with reducer TR15/12/15L71	
126	312115-0374		PC	12	Screw ISO4762 M6x30 A4 80	
127	90459-3053		PC	1	Clamp 15mm, RAA215X	
132	6-4722 9894 01		PC	1	Cooling pipe Ø12x1	
133	6-4722 9894 02		PC	1	Cooling pipe Ø12x1	
135	312115-0378		PC	2	Screw ISO4762 M6x40 A4 80	
173	6-4723 2429 04		PC	1	Pipe Ø12x1	
174	6-4723 2429 02		PC	1	Pipe Ø12x1	
F811	6-4722 5015 03		PC	1	Steam valve pneum 625 15	
V831	90459-2629		PC	1	Needle Valve 3/8” BSP	
V832	90459-2629		PC	1	Needle Valve 3/8” BSP	
			PC	1	DRW 6-4722847400 (02);MOD 6-4722847402	

Pos	Part No	SP h	UN	Qty	Description	Page No

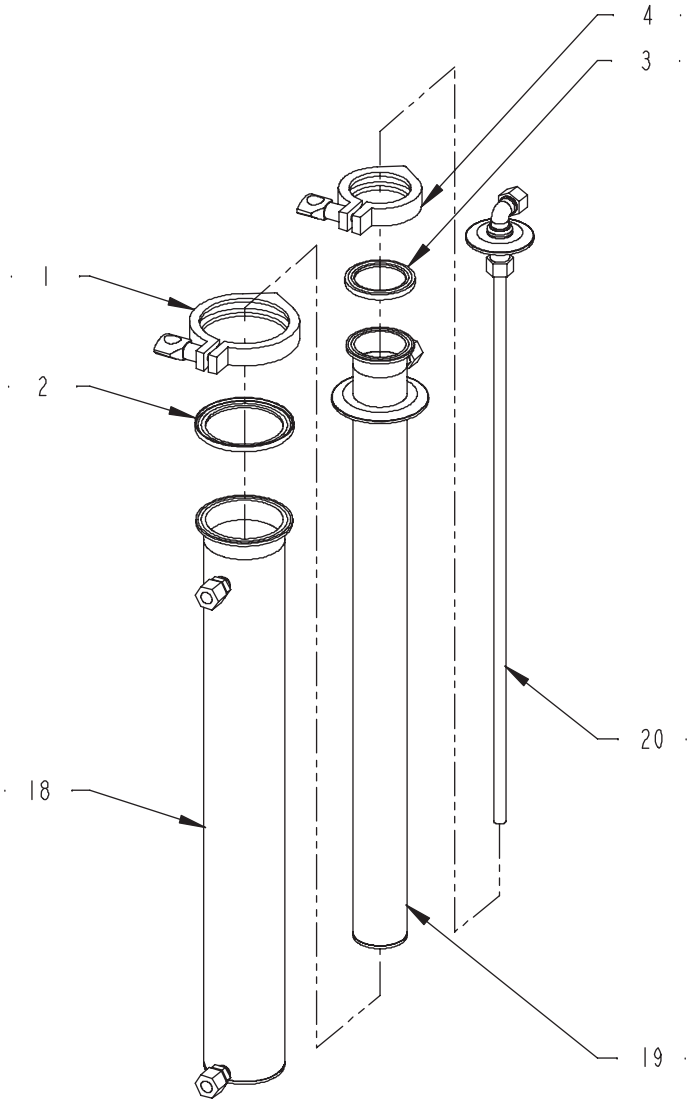

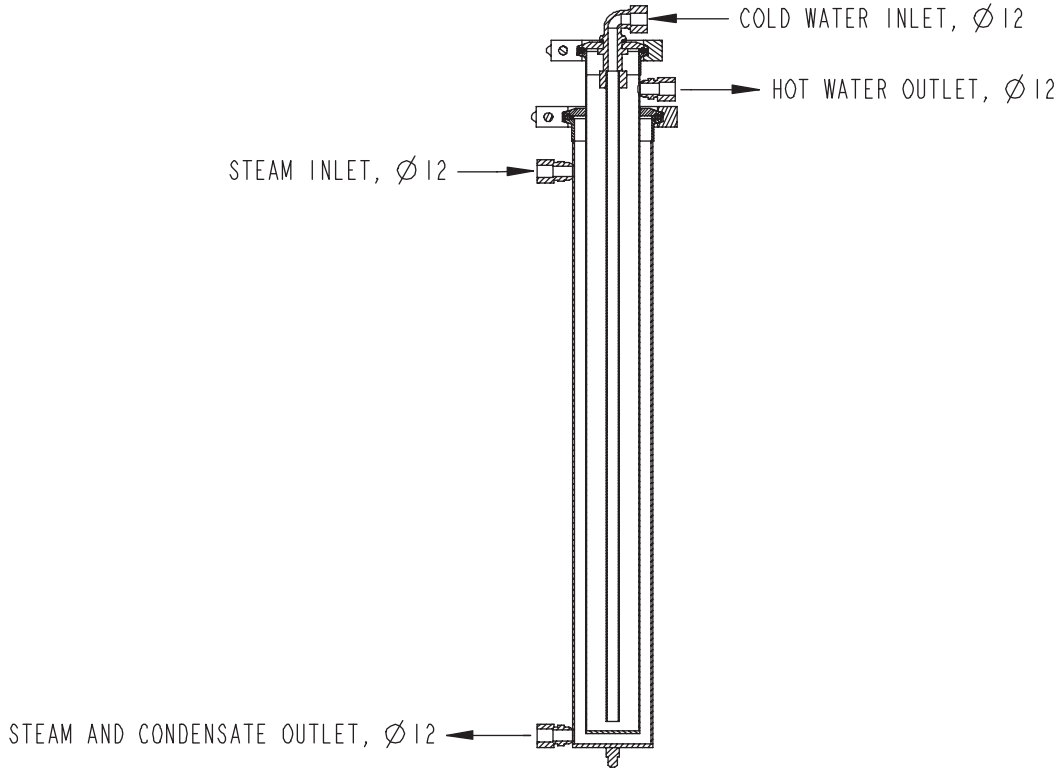

6-4723084900
526903

Pos	Part No	SP h	UN	Qty	Description	Page No
1	344215-0107		PC	2	Clamp Ring A13MHM 3”, 211056	
2	6-9611 99 1362		PC	2	Seal CL76.1 73.10/93.20x5.50 EPDM	
3	6-9611 99 1360		PC	2	Seal CL51 48.80/66.20x5.50 EPDM	
4	344215-0105		PC	2	Clamp Ring A13MHM 2”, 211054	
18	6-4723 0846 01		PC	2	Steam pipe	
19	6-4723 0847 01		PC	2	Hot water pipe	
20	6-4723 0848 01		PC	2	Cold water pipe	

Pos	Part No	SP h	UN	Qty	Description	Page No

Cooling System Condensor Outlet

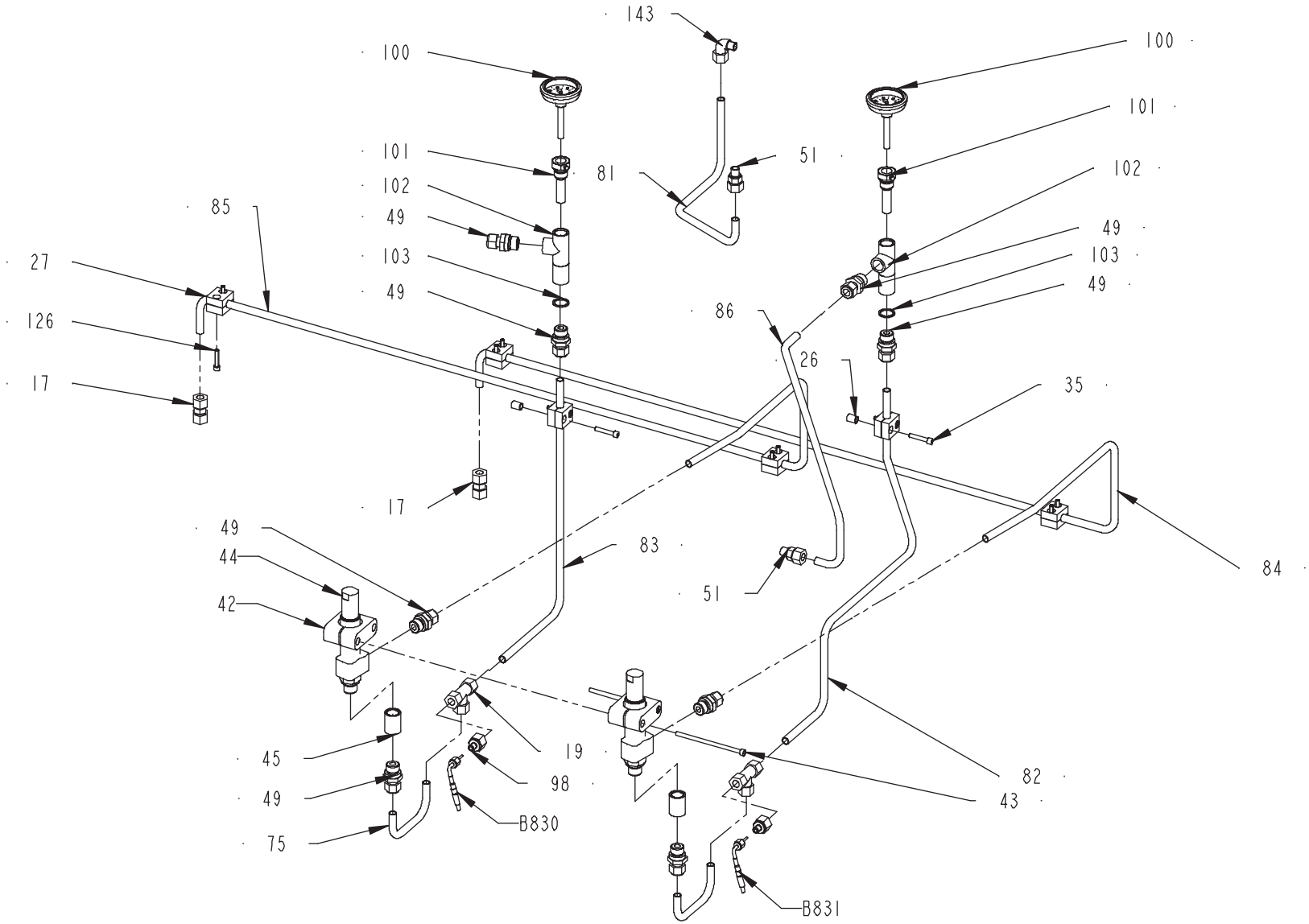

6-4722847500
589831

Pos	Part No	SP h	UN	Qty	Description	Page No
17	90030-0106		PC	2	Pipe Connection G 12	
19	90030-0058		PC	2	Conn. T-Pipe T12L71	
26	6-4722 6095 01		PC	4	Spacer 12 x 8.2 x 15	
27	90458-2011		PC	6	Pipe Clamp, d=12 mm, RAA112X	
35	312115-0376		PC	4	Screw ISO4762 M6x35 A4 80	
42	90458-2568		PC	2	Pipe Clamp, d=38 mm, RAP538X	
43	90287-0333		PC	2	Screw MC6S M6x120 A270	
44	6-4722 8057 01		PC	2	Condensate valve R1/2"-Rp1/2" 0.35 bar	
45	6-2 521201 05		PC	2	Socket DN15 Rp1/2" 1.4404	
49	6-4722 6098 01		PC	8	Straight connection GE 12-PL/R 1/2"	
51	90030-0590		PC	2	Conn. Str. GE12LR1/4ED71	
75	6-4723 1232 11		PC	2	Pipe Ø12x1	
81	6-4722 7680 70		PC	1	Cooling pipe Ø12x1	
82	6-4722 9894 07		PC	1	Cooling pipe Ø12x1	
83	6-4722 7680 58		PC	1	Cooling pipe Ø12x1	
84	6-4722 7680 53		PC	1	Cooling pipe Ø12x1	
85	6-4722 7680 52		PC	1	Cooling pipe Ø12x1	
86	6-4722 7680 60		PC	1	Cooling pipe Ø12x1	
98	6-4723 0275 01		PC	2	Coupling PT100	
100	6-4722 5017 03		PC	2	Thermometer 0-160°C	
101	6-4722 5022 01		PC	2	Thermometer connection	
102	6-4722 6096 01		PC	2	Thermometer connection	
103	6-4722 5181 01		PC	2	Seal 21 x 26 x 1.5	
126	312115-0374		PC	8	Screw ISO4762 M6x30 A4 80	
143	90600-0253		PC	2	Elbow fitting WE 12LR1/4 71	
B830	90513-2653		PC	1	Temp. Meter TPT12 4-20 mA 0-160 deg.C	
B831	90513-2653		PC	1	Temp. Meter TPT12 4-20 mA 0-160 deg.C	
			PC	1	DRW 6-4722847500 (02);MOD 6-4722847502	

Pos	Part No	SP h	UN	Qty	Description	Page No

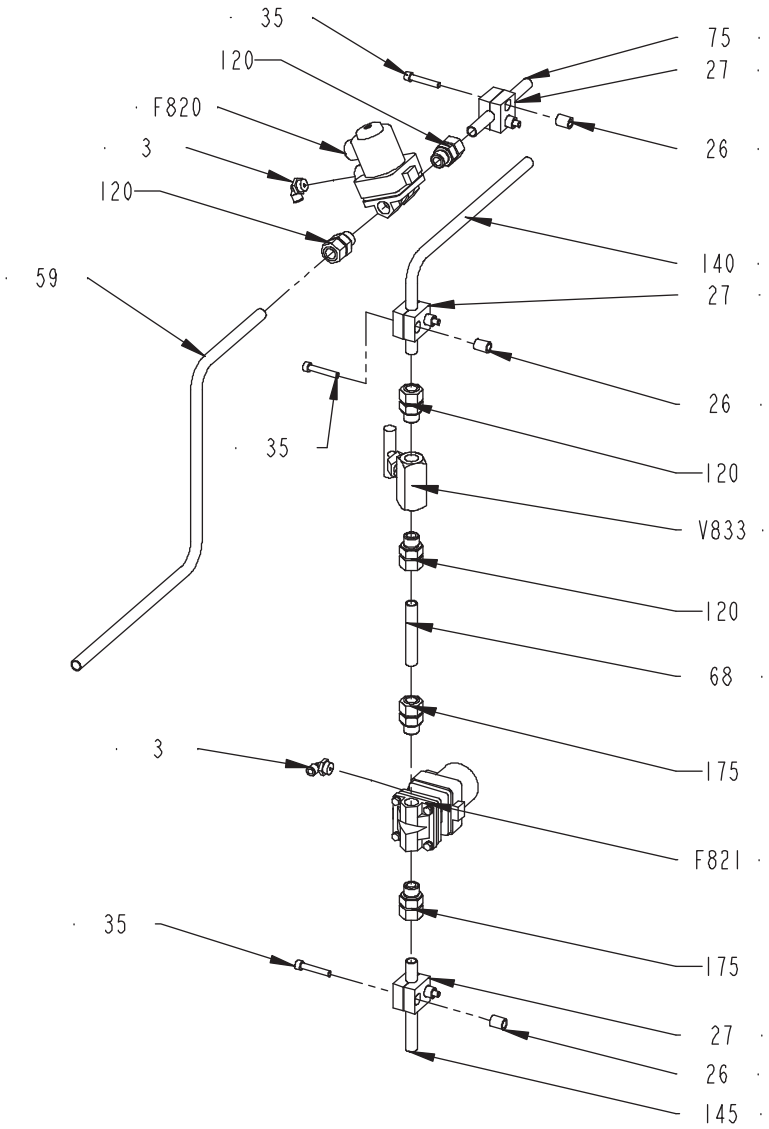

6-4722847600
589831

Pos	Part No	SP h	UN	Qty	Description	Page No
3	90458-2957		PC	2	Elbow Pipe Joint, Ext.Thread, D=6Mm-G1/4	
27	90458-2011		PC	3	Pipe Clamp, d=12 mm, RAA112X	
35	312115-0376		PC	6	Screw ISO4762 M6x35 A4 80	
26	6-4722 6095 01		PC	6	Spacer 12 x 8.2 x 15	
68	6-4722 7680 43		PC	1	Cooling pipe Ø12x1	
75	6-4722 7680 26		PC	1	Cooling pipe Ø12x1	
120	6-4350 8400 78		PC	4	Straight connection GE 12 L/R3/8”	
140	6-4722 7680 42		PC	1	Cooling pipe Ø12x1	
145	6-4722 7680 71		PC	1	Cooling pipe Ø12x1	
175	6-4350 8400 78		PC	2	Straight connection GE 12 L/R3/8”	
F820	6-4722 5016 01		PC	1	Water valve pneum. Type 615	
F821	6-4722 5015 01		PC	1	Steam valve pneum.	
V833	90459-2629		PC	1	Needle Valve 3/8” BSP	
59	6-4723 1232 10		PC	1	Pipe Ø12x1	
			PC	1	DRW 6-4722847600 (02);MOD 6-4722847602	

Pos	Part No	SP h	UN	Qty	Description	Page No

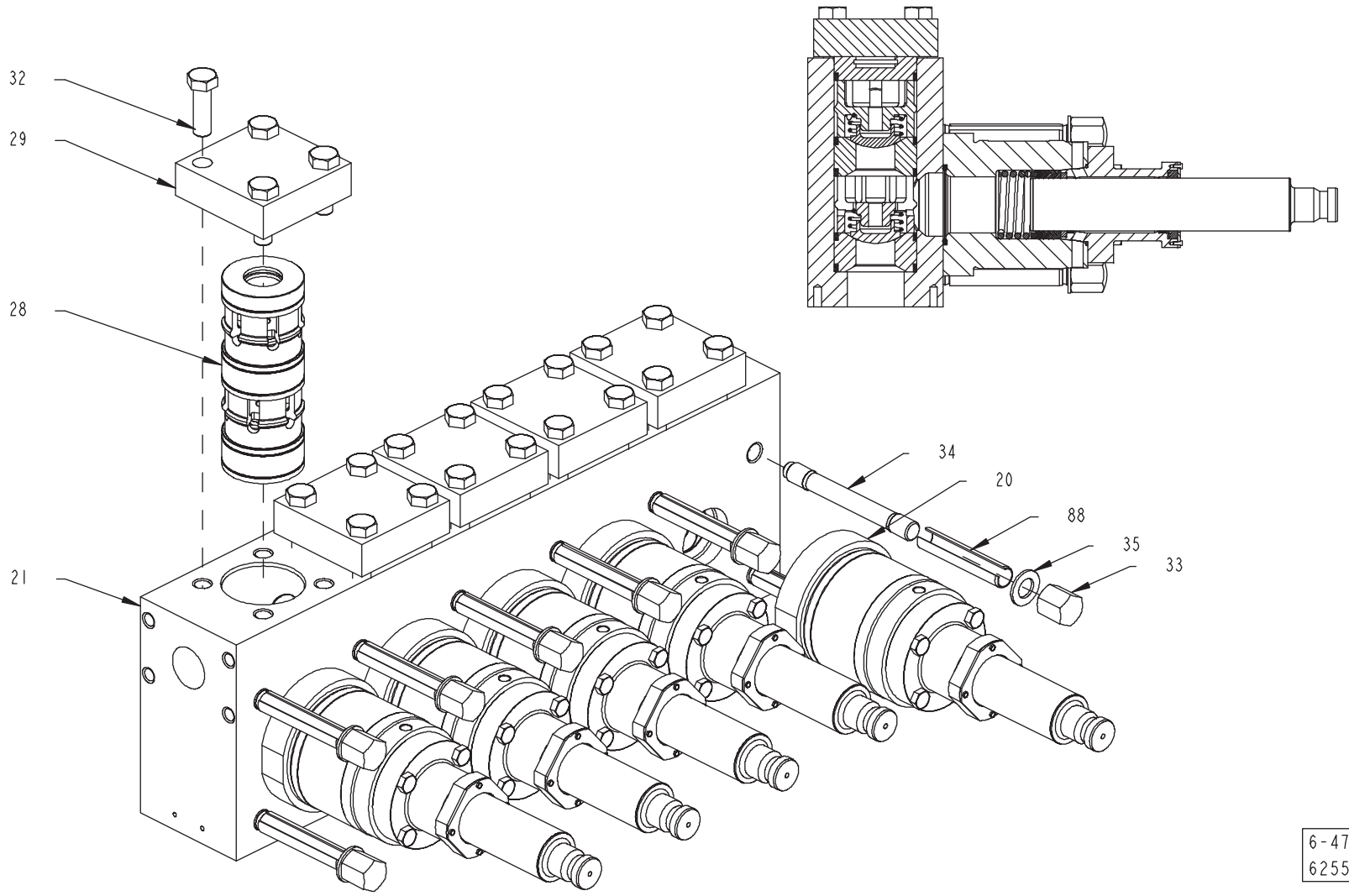
32
29
28
21
34
20
88
35
33
6-4723092000
625588

Pos	Part No	SP h	UN	Qty	Description	Page No
20	6-4723 0921 80		PC	5	Piston cartridge M400	
21	6-4722 7119 01		PC	1	Pump block ø65 US-3A	
28	6-4722 8161 80		PC	5	Valve cartridge Mushroom ø65	
29	6-4722 2222 01		PC	5	Valve cover	
32	6-4722 7446 02		PC	20	Screw M6S 24 x 75	
33	6-4010 6240 03		PC	12	Cap nut M27	
34	6-4722 6852 36		PC	12	Stud bolt M27x 226	
35	6-4015 0501 97		PC	12	Washer BRB 28 A2	
88	6-4722 5033 02		PC	12	Guide ring M27	

Pos	Part No	SP h	UN	Qty	Description	Page No

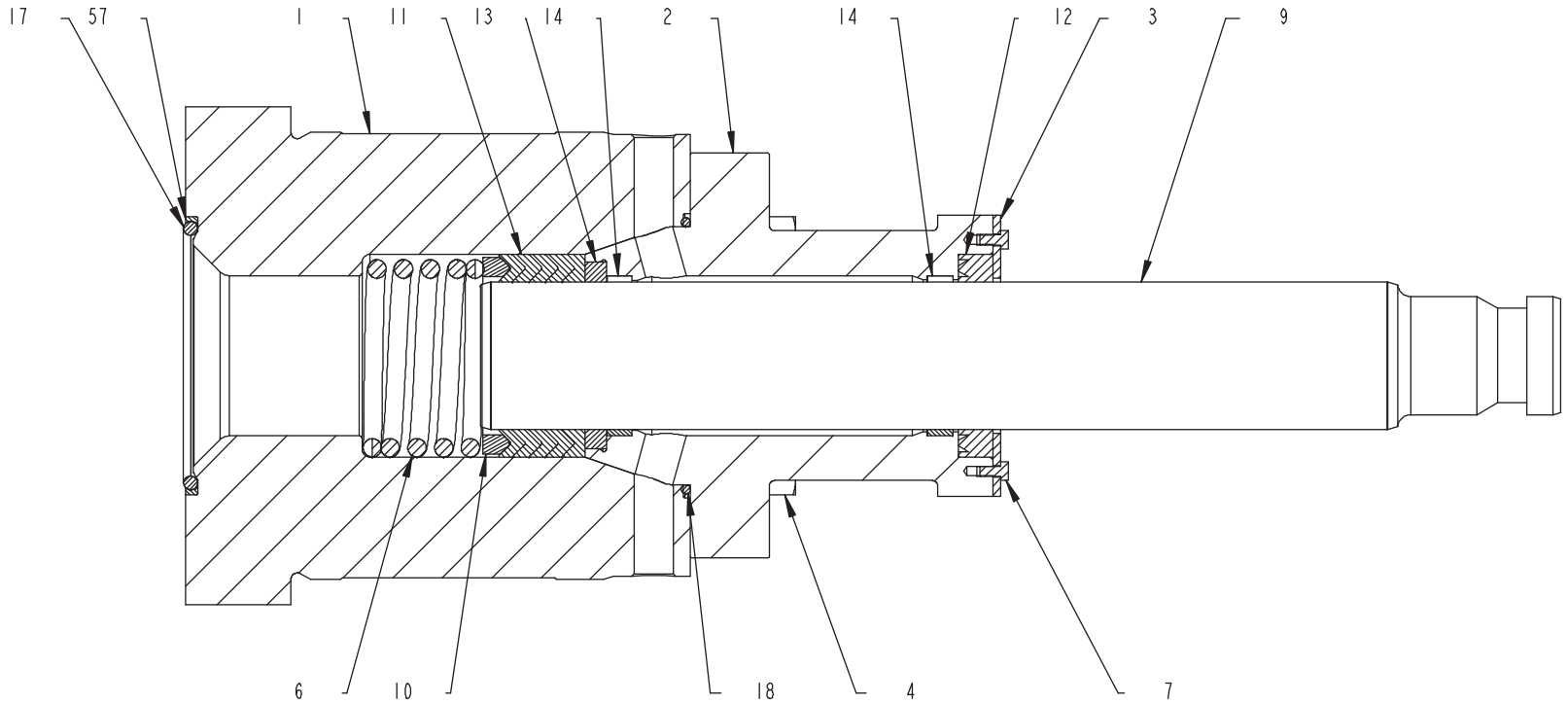

6-4723092100
625588

Pos	Part No	SP h	UN	Qty	Description	Page No
1	6-4723 0978 01		PC	5	Cylinder bushing 56 M400	
2	6-4723 0630 01		PC	5	Piston bushing 56	
3	6-4723 1015 02		PC	5	Piston Cartridge Lid 56	
4	90287-0352		PC	20	Screw M6S M16x120H A270	
6	6-4723 0641 01		PC	5	Compression spring 61x100x7	
7	312105-0287		PC	20	Screw, M6S ISO 4017 M4x8 A4 70	
9	6-4722 8030 03		PC	5	Piston 56 Tc	
10	6-4723 0602 09		PC	5	Support ring 56	
11	6-4723 0647 01		PC	5	Piston seal 56 PSU1	
12	6-4722 0931 04		PC	5	Piston seal 56 PSB1	
13	6-4723 0208 09		PC	5	Compression ring 56	
14	6-4722 1418 07		PC	10	Guide band 56x9.5	
17	6-4723 1370 24		PC	5	O-ring 91.44x5.33 Foodgrade	
18	6-4723 1370 61		PC	5	O-ring 98,02x3,53 Foodgrade	
57	6-4722 7159 06		PC	5	Support ring radial 5.33x106	

Pos	Part No	SP h	UN	Qty	Description	Page No

Valve Cartridge

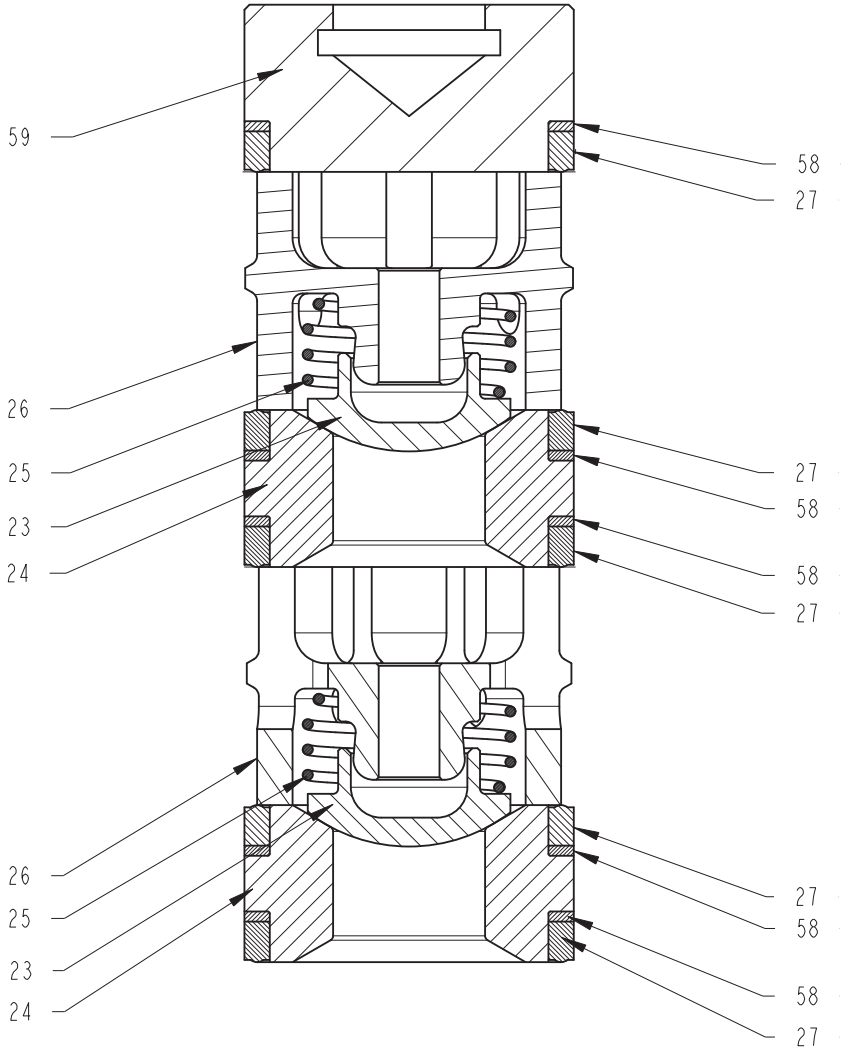

6-4722816100
ECM 160951

Pos	Part No	SP h	UN	Qty	Description	Page No
23	6-4722 6648 02		PC	10	Mushroom valve 65	
24	6-4722 6649 05		PC	10	Valve seat mushroom valve 65	
25	6-4722 6652 01		PC	10	Valve spring 65	
26	6-4722 6657 01		PC	10	Valve cage ø65	
27	6-4722 0942 02		PC	25	Valve sealing 55 x 65 x 8	
58	6-4722 1178 18		PC	25	Support ring 65	
59	6-4722 6651 01		PC	5	Spacer 65	

Pos	Part No	SP h	UN	Qty	Description	Page No

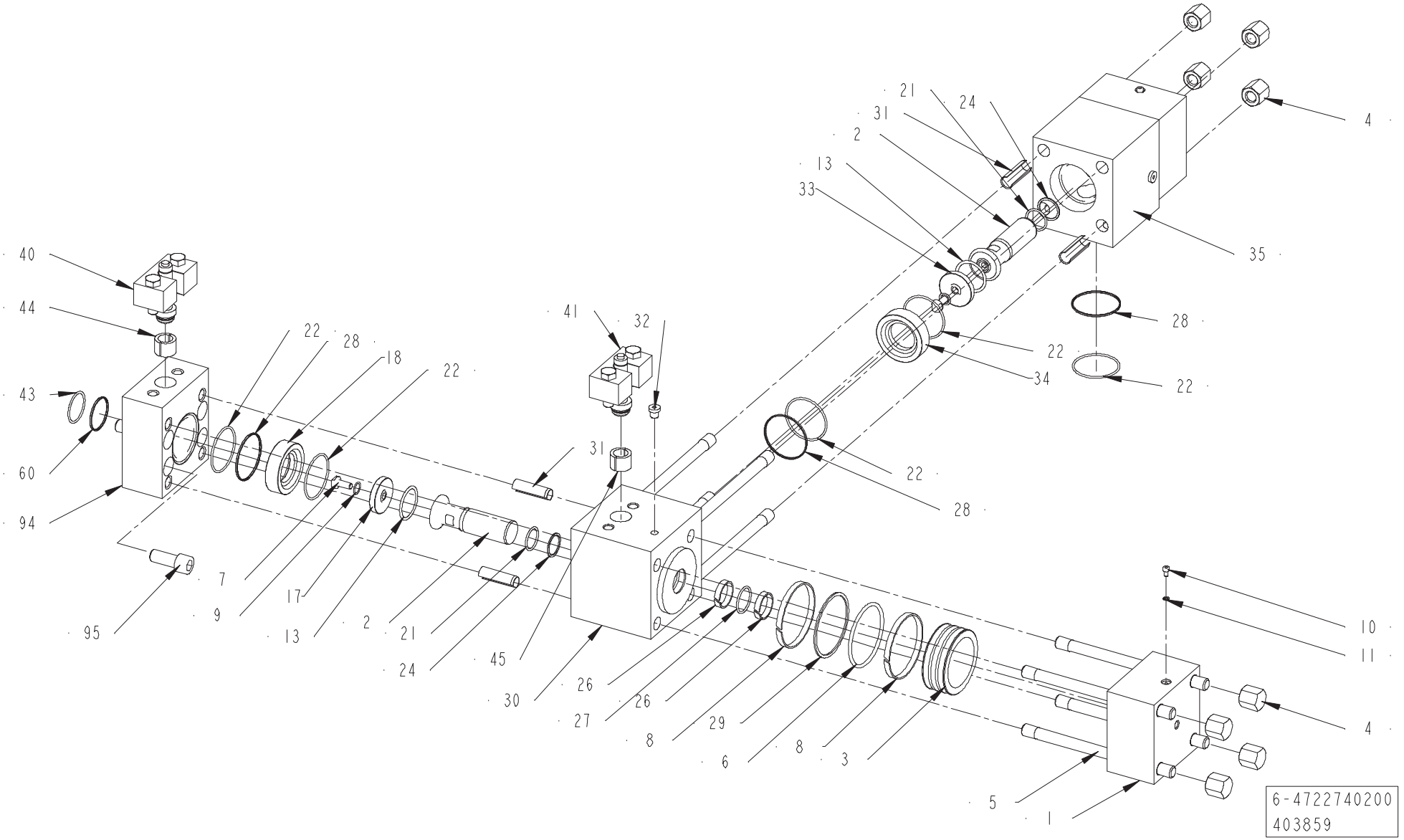
40
44
43
60
94
95
7
9
22
28
18
22
17
13
2
21
24
45
30
41
32
31
26
27
26
8
29
6
8
3
5
1
21
24
31
2
13
33
4
35
28
22
34
22
22
28
10
11
4
6-4722740200
403859

Pos	Part No	SP h	UN	Qty	Description	Page No
1	6-4722 7086 01		PC	2	Hydraulic cylinder 110	
2	6-4722 9020 01		PC	2	Forcer shaft	
3	6-4722 7087 01		PC	2	Hydraulic piston 110	
4	6-4010 6240 01		PC	8	Cap nut M20	
5	6-4722 6852 46		PC	4	Stud bolt M20 x 281	
6	6-4722 6562 46		PC	2	O-ring 97.79 x 5.33	
7	6-31353 0362 1		PC	2	Screw ARC/SMO/SRC	
8	6-4306 0000 07		PC	4	Guide band 110	
9	6-4723 1370 35		PC	2	O-ring 16.3x2.4 Foodgrade	
10	312115-0364		PC	2	Screw ISO4762 M6x10 A4 80	
11	6-4722 5233 01		PC	2	Sealing ring 6 x 10	
13	6-4723 1370 10		PC	2	O-ring 47.22x3.53 Foodgrade	
17	6-4722 9017 02		PC	1	Forcer disc 49/58, 49/55 ABR	
18	6-4722 7099 04		PC	1	Seat 49/58	
19	6-4722 6852 46		PC	4	Stud bolt M20 x 281	
21	6-4723 1370 06		PC	2	O-ring 32.92x3.53 Foodgrade	
22	6-4723 1370 15		PC	5	O-ring 69.44x3.53 Foodgrade	
24	6-4722 7151 02		PC	2	Support ring axial 3.53 x 40.2	
26	6-4722 1418 03		PC	4	Guide band 40 x 9.5	
27	6-4723 1370 08		PC	2	O-ring 40.87x3.53 Foodgrade	
28	6-4722 7152 03		PC	3	Support ring radial 3.53 x 79.8	
29	6-4722 7153 02		PC	2	Support ring axial 5.33 x 110	
30	6-4722 7401 05		PC	1	Housing	
31	6-4722 5033 03		PC	4	Guide ring	
33	6-4722 9017 01		PC	1	Forcer disc 49/58,49/55	
34	6-4722 7099 01		PC	1	Seat 49/58	
35	6-4722 7401 01		PC	1	Housing	
40	6-4722 8763 80		PC	1	Pressure gauge flange	
41	6-4722 8763 81		PC	1	Pressure gauge flange 2nd stage	
43	6-4723 1370 10		PC	1	O-ring 47.22x3.53 Foodgrade	
44	6-4723 0102 01		PC	1	Ring manometer	
45	6-4723 0102 01		PC	1	Ring manometer	
60	6-4722 7152 06		PC	1	Support ring radial 3.53 x 56.8	
94	6-4722 9334 04		PC	1	Intermediate flange, 315-400 BAR	
95	312115-0674		PC	4	Screw ISO4762 M20x50 A4 80	

Pos	Part No	SP h	UN	Qty	Description	Page No

Flange Manometer

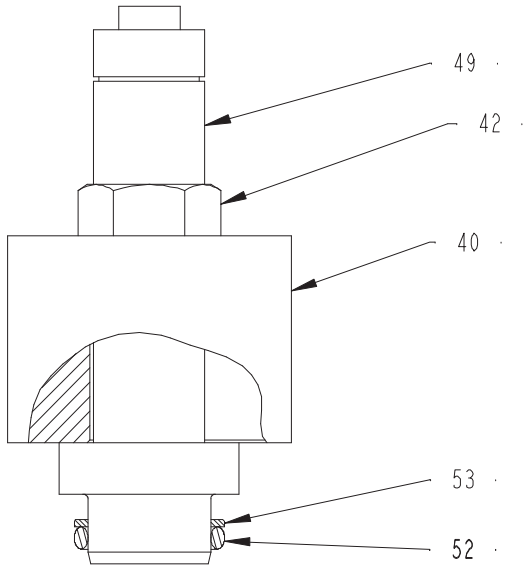

6-4722876300
598647

Pos	Part No	SP h	UN	Qty	Description	Page No
40	6-4722 8752 01		PC	1	Pressure gauge flange	
42	312105-0631		PC	2	Screw, M6S ISO 4014 M16x55 A4 80	
49	6-4722 6396 02		PC	1	Pressure gauge 0-400 bar with remote ind	
52	6-4723 1370 52		PC	1	O-ring 23.39x3.53 Foodgrade	
53	6-4722 8753 01		PC	1	Back-up Ring	

Pos	Part No	SP h	UN	Qty	Description	Page No

Flange Manometer 2nd stage

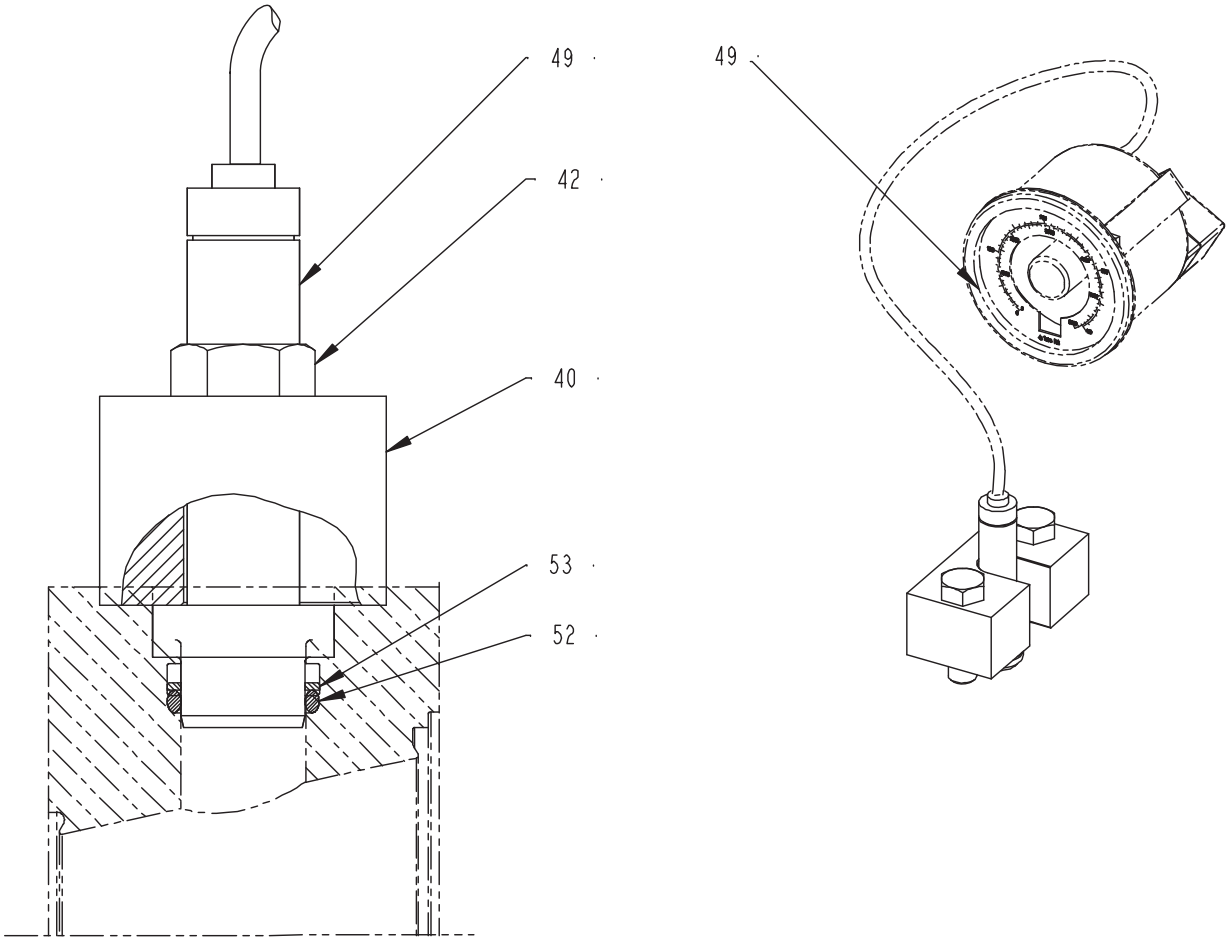

6-4722876300
ECM 129991

Pos	Part No	SP	h	UN	Qty	Description	Page No
40	6-4722 8752 01			PC	1	Pressure gauge flange	
42	312105-0631			PC	2	Screw, M6S ISO 4014 M16x55 A4 80	
49	6-4722 6396 04			PC	1	Pressure gauge 0-100bar, remote reading	
52	6-4723 1370 52			PC	1	O-ring 23.39x3.53 Foodgrade	
53	6-4722 8753 01			PC	1	Back-up Ring	

Pos	Part No	SP	h	UN	Qty	Description	Page No

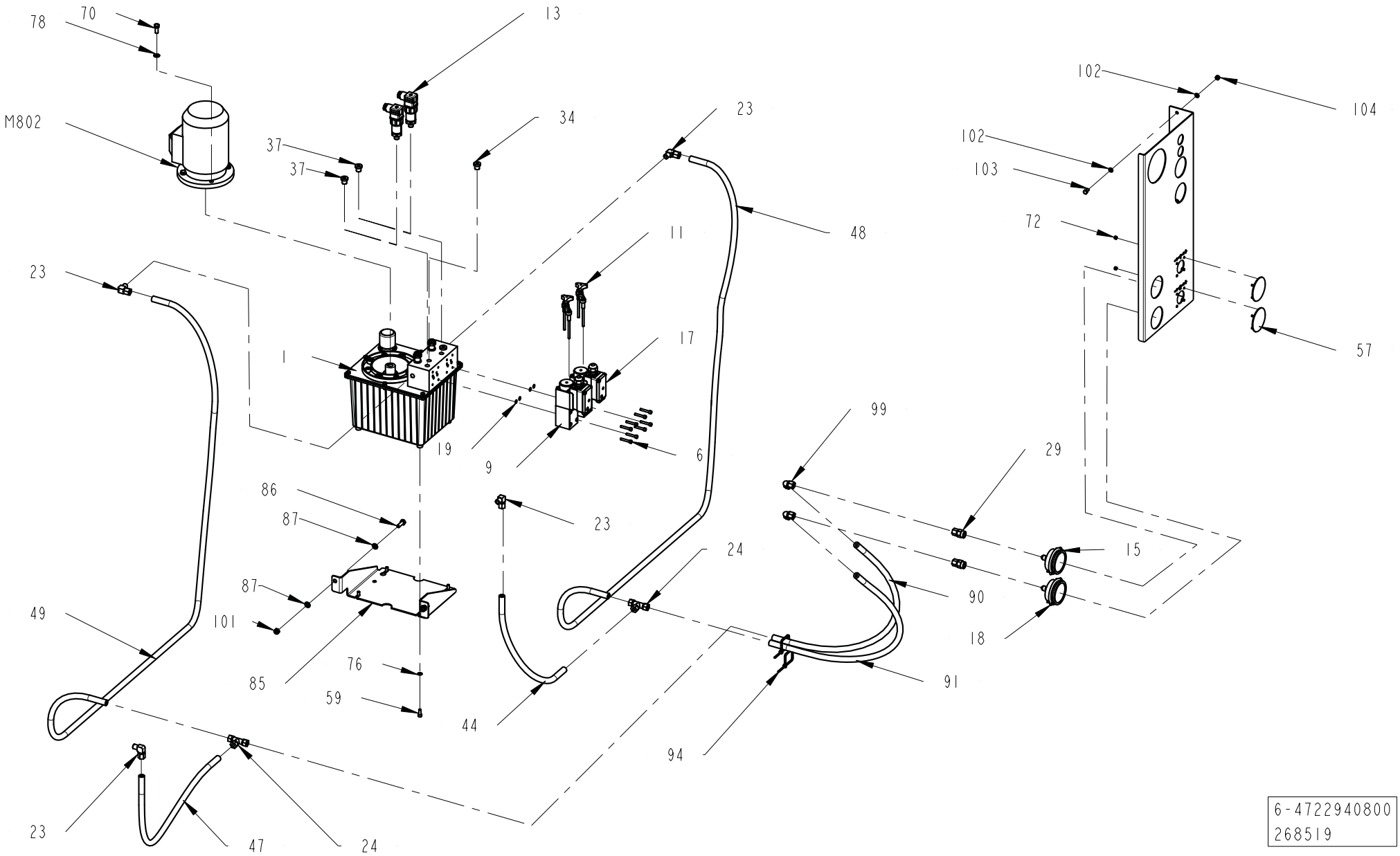
78
70
13
M802
37
37
34
23
48
11
23
1
17
19
9
6
99
29
86
87
23
24
15
87
90
49
101
18
76
85
59
91
44
94
23
47
24
102
104
102
103
72
57
6-4722940800
268519

Pos	Part No	SP h	UN	Qty	Description	Page No
1	6-4723 1911 01		PC	1	Hydraulic Unit	
15	6-4932 2002 45		PC	1	Hydraulic pressure gauge 250bar	
18	6-4932 2002 46		PC	1	Hydraulic pressure gauge 60bar.	
19	6-4722 6515 01		PC	4	O-ring 9.25 x 1.78	
23	342731-0103		PC	4	Conn. Elbow, WE08LRCF	
24	342747-0103		PC	2	Conn. T-Pipe T-8	
29	6-4350 8405 07		PC	2	Connection LR/G 1/4”	
34	90087-0015		PC	1	Plug, Ext. Thread Hex. So	
37	90087-0015		PC	2	Plug, Ext. Thread Hex. So	
44	6-4722 6746 07		PC	1	Hydraulic hose 700	
47	6-4722 6746 09		PC	1	Hydraulic hose 900	
48	6-4722 6746 23		PC	1	Hydraulic hose 2300	
49	6-4722 6746 23		PC	1	Hydraulic hose 2300	
55	6-4722 9359 06		PC	1	Panel for machine control M350, M400	
59	312105-0366		PC	4	Screw, M6S ISO 4017 M6x12 A4 80	
61	312115-0335		PC	8	Screw ISO4762 M5x30 A4 80	
70	312115-0451		PC	4	Screw ISO4762 M8x20 A4 80	
76	315105-0153		PC	4	Washer plain, 6,4x12x1,5 A4 BRB	
78	315105-0165		PC	4	FWAS080G0-0S, Washer plain	
85	6-4722 7240 04		PC	1	Cantilever M400	
86	312105-0449		PC	2	Screw, M6S ISO 4017 M8x16 A4 80	
87	315105-0165		PC	4	FWAS080G0-0S, Washer plain	
90	6-4722 6746 09		PC	1	Hydraulic hose 900	
91	6-4722 6746 09		PC	1	Hydraulic hose 900	
94	6-1995 106 510		PC	2	Stripes black TY 5232MX 200X2,4mm	
99	342737-0208		PC	2	Elbow Connection 8, W08L71	
101	312812-0318		PC	2	Hexagon nut, Ny-Lock M8 A4 80	
102	315105-0153		PC	6	Washer plain, 6,4x12x1,5 A4 BRB	
103	312105-0370		PC	3	Screw, M6S ISO 4017 M6x20 A4 80	
104	312812-0316		PC	3	Hexagon nut, Ny-Lock M6 A4 80	
150	6-4723 0454 01		PC	1	Stabilizing plate	
151	6-4722 8037 01		PC	2	RUBBER SHOCK ABSORBER	
152	315105-0165		PC	4	FWAS080G0-0S, Washer plain	
153	312105-0447		PC	4	Screw M6S ISO 4017 M8x12 A480	
M802	6-4722 5265 32		PC	1	Motor 0,25kW 400VD/50Hz 71M 4pol B5	
Y824	6-4723 1768 01		PC	1	Complete Prop. Valve 180 bar	
Y825	6-4723 1769 01		PC	1	Complete Prop. Valve 80 bar	

Pos	Part No	SP h	UN	Qty	Description	Page No

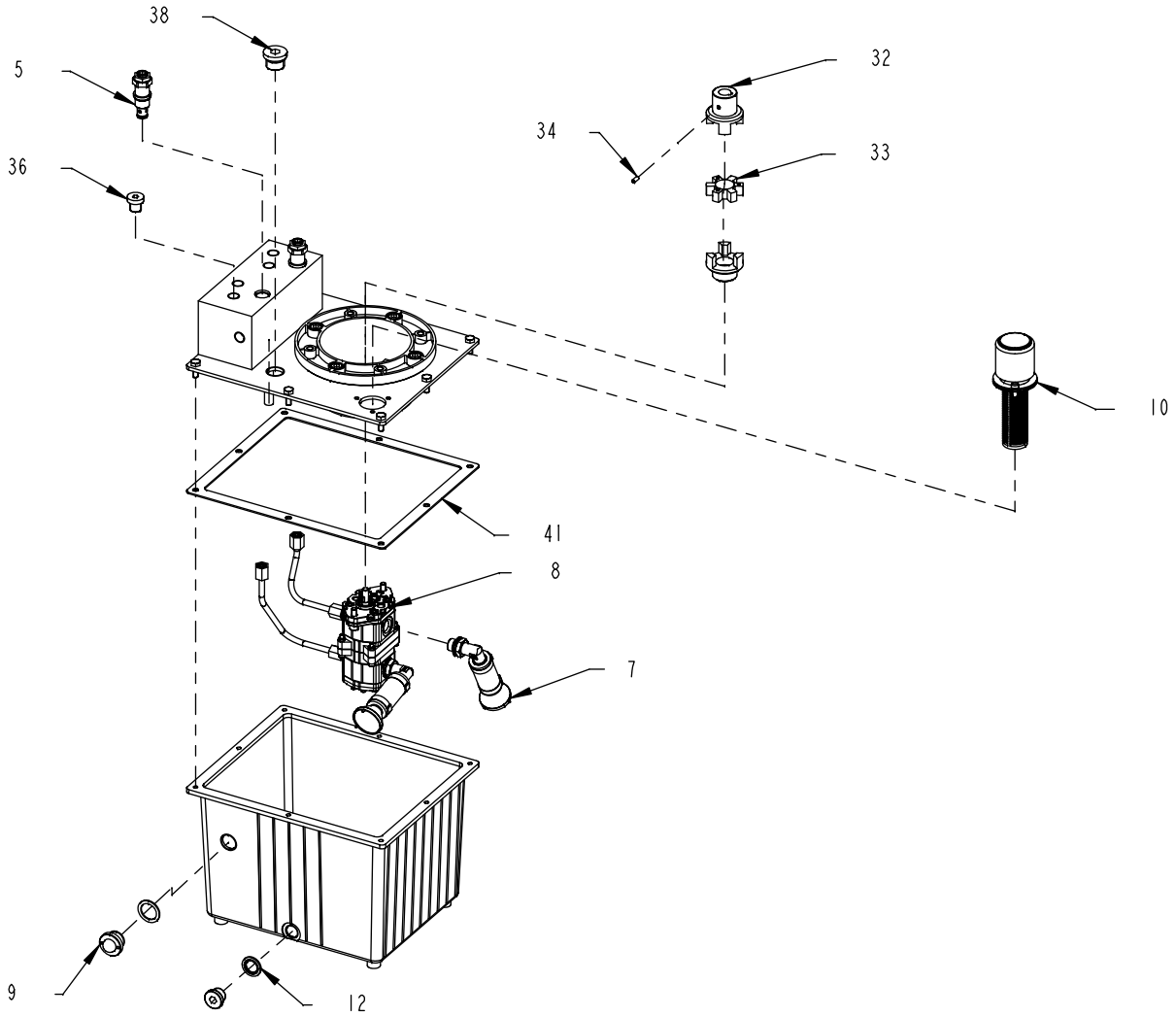

6-4723191100
718223

Pos	Part No	SP h	UN	Qty	Description	Page No
5	6-4723 1253 01		PC	2	Pressure Relief Valve	
7	6-4723 1914 01		PC	2	Filter	
8	6-4723 1912 01		PC	1	Double Hydraulic Pump Incl. filter	
9	6-4722 7553 01		PC	1	Sight glass	
10	6-4722 7554 01		PC	1	Filter	
12	315211-0109		PC	1	Bonded Seal SS/NBR90 G3/8	
24	312105-0368		PC	8	Screw, M6S ISO 4017 M6x16 A4 80	
32	6-4722 7550 01		PC	1	Shaft coupling	
33	6-4722 7551 01		PC	1	Rubber cross	
34	312318-0289		PC	1	Set screw, Cup end ISO4029 M4x10 A4	
35	6-4722 7555 01		PC	1	Key 2 x 2 6 DIN 6888	
36	90087-0015		PC	1	Plug, Ext. Thread Hex. So	
38	90087-0024		PC	1	Plug, Ext. Thread Hex. Socket Vsti 1/2-E	
39	312605-0316		PC	1	Hexagon Nut, M6M M6 A280	
40	315701-0203		PC	1	Parallel key w. round ends, 5x5x25 mm	
41	6-4722 7549 01		PC	1	Tank Gasket	

Pos	Part No	SP h	UN	Qty	Description	Page No

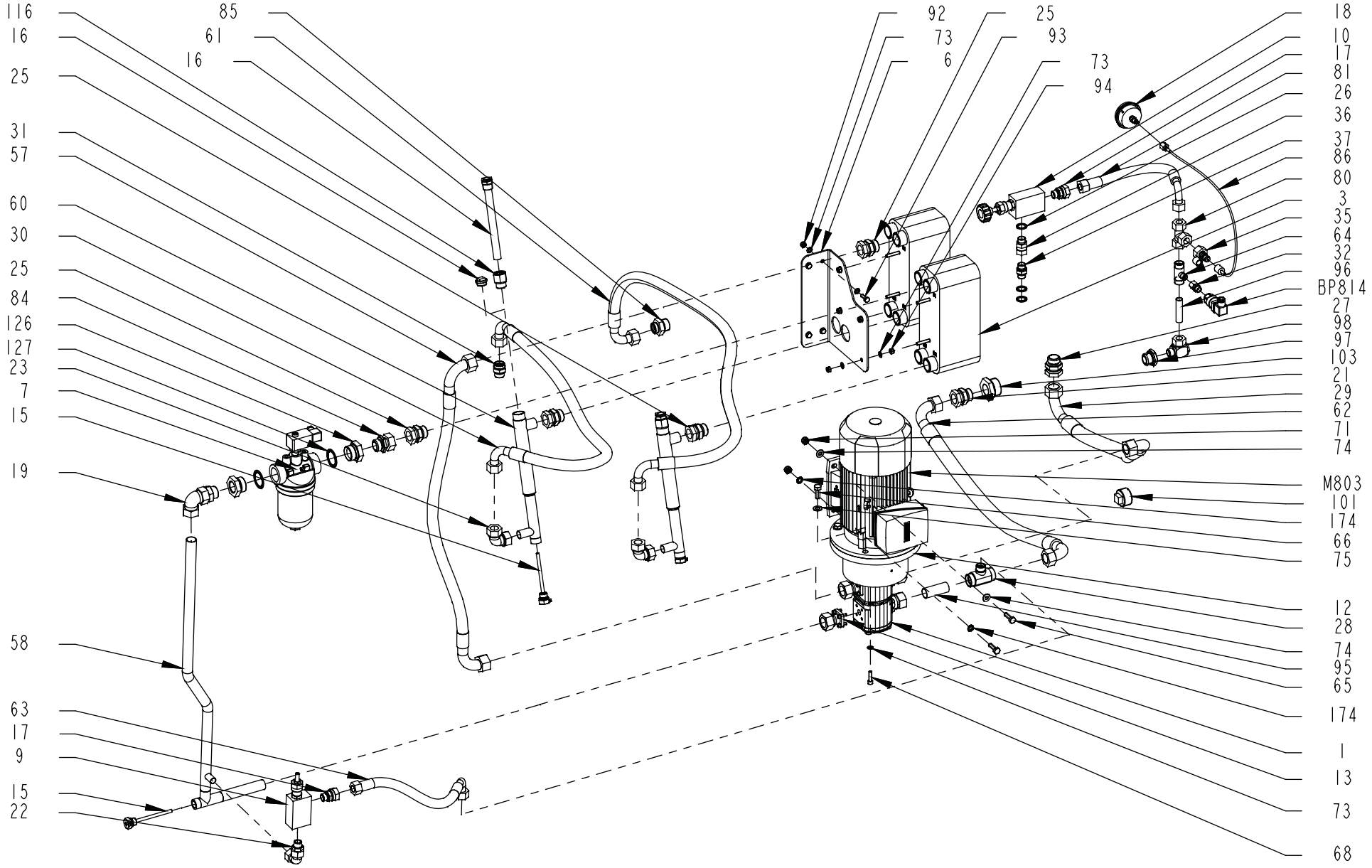
116
16
25
31
57
60
30
25
84
126
127
23
7
15
19
58
63
17
9
15
22
85
61
16
92
73
6
25
93
73
94
18
10
17
81
26
36
37
86
80
3
35
64
32
96
BP814
27
98
97
103
21
29
62
71
74
M803
101
174
66
75
12
28
74
95
65
174
1
13
73
68

Pos	Part No	SP h	UN	Qty	Description	Page No
1	6-4723 1267 01		PC	1	Pressure lubrication pump	
3	6-4722 7272 01		PC	2	Heat exchanger CB30-50M	
6	6-4723 1391 01		PC	1	Mounting plate M400	
7	6-4723 0428 80		PC	1	Filter complete 160	
9	6-4723 1771 01		PC	2	Pressure relief valve 5-50 bar	
10	6-4723 1772 01		PC	1	Pressure relief valve 5-50 bar with knob	
12	6-4722 7279 01		PC	1	Spacer piece	
13	6-4722 7280 01		PC	4	Straight flange	
15	6-4722 7283 02		PC	3	Sensor Pocket	
16	6-4722 6939 01		PC	2	Sensor pocket out 3/4”	
17	342752-0118		PC	2	Conn. Str. GE18LREDCF	
18	6-4722 7287 03		PC	1	Pressure gauge 0-16bar	
19	342738-0131		PC	1	Adjustable elbow connection 28-G1	
21	342752-0121		PC	1	Conn. Str. GE28LREDCF	
22	342738-0125		PC	1	Adjustable elbow connection 18-G1/2	
23	342737-0119		PC	2	Elbow Connection 22, W22Lcf	
25	342752-0121		PC	4	Conn. Str. GE28LREDCF	
26	315211-0111		PC	3	Bonded Seal SS/NBR90 G1/2	
27	342752-0121		PC	1	Conn. Str. GE28LREDCF	
28	90459-6593		PC	1	T-Reducer, TR28/18/28LCF	
29	6-4722 7745 01		PC	1	Hydraulic hose L=770	
30	6-4723 2197 01		PC	1	Hydraulic hose	
31	90459-6452		PC	1	Conn. Str. GE22LREDOMDCF	
32	90459-6459		PC	1	Conn. Press. Gauge MAVE10LRCF	
35	90459-6528		PC	1	Test point connection, VKA3/18LCF	
36	6-4722 7307 01		PC	1	Screw connection ADJUSTABLE 1/2”	
37	6-4722 7306 01		PC	1	Screw connection 1/2”	
57	6-4723 0874 01		PC	1	Hydraulic hose 1” L=950mm	
58	6-4723 1925 01		PC	1	Oil pipe 28x1.5 M400	
60	6-4722 7741 01		PC	2	Oil pipe 28x1.5 M350, M400	
61	6-4723 2198 01		PC	1	Hydraulic hose	
62	6-4723 2195 01		PC	1	Hydraulic hose	
63	6-4722 7749 01		PC	1	Hydraulic hose	
64	90459-6458		PC	1	T-Pipe, Int. Thread, TR18/10/18LCFX	
65	312105-0497		PC	4	Screw, M6S ISO 4017 M10x35 A4 80	
66	312105-0536		PC	4	Screw, M6S ISO 4017 M12x30 A4 80	
68	312115-0455		PC	4	Screw ISO4762 M8x30 A4 80	
71	312812-0320		PC	4	Hexagon nut, Ny-Lock M10 A4 80	
73	315105-0165		PC	20	FWAS080G0-0S, Washer plain	
74	315105-0173		PC	6	Washer plain, 10,5x22x2 A4 BRB	
75	315105-0178		PC	4	Washer plain, 13x24x2,5 A4 BRB	
80	342761-0118		PC	1	Adjustable standpipe run tee 18	
81	6-4722 7751 01		PC	1	Hydraulic hose L=360	
84	90459-6451		PC	1	Conn. Str. EVGE28LREDCF	
85	90459-6457		PC	1	Conn. Str. GE22LR1EDOMDCF	
86	90148-0101		PC	1	Measuring hose,Minimess S110-AC-FA-0063	
92	312812-0318		PC	8	Hexagon nut, Ny-Lock M8 A4 80	
93	312105-0453		PC	4	Screw, M6S ISO 4017 M8x25 A4 80	
94	312605-0318		PC	4	Hexagon Nut, M6M M8 A280	
95	6-4722 7760 01		PC	1	Oil pipe 28x1.5 M350, M400	
96	6-4722 7762 01		PC	1	Oil pipe 18x1.0 M350, M400	
97	90458-1780		PC	1	Bushing, Int/Ext, G1-G1/2 Eolastic	
98	342796-0118		PC	1	Conn. Banjo,WH 18-G1/2	
101	6-526351 08		PC	1	Square plug DN40 R 1 1/2” 1.4404	
103	90459-6456		PC	1	Reducer, RI11/2EDX1CF	
116	90600-1303		PC	2	Reduktor	
126	6-4723 0439 01		PC	2	Adapter 1,1/4” - 1”	
127	6-4723 0440 01		PC	2	SEAL RING Ø39	
174	90522-9506		PC	2	Lock washer DIN6798A 10.5x18x0.9 A4	
M803	6-4723 0971 32		PC	1	Motor 2,2kW 400VD/50Hz 100L 4pol IE3	
B814	6-4722 7273 01		PC	1	Pressure switch 3,0 bar	

Filter 160

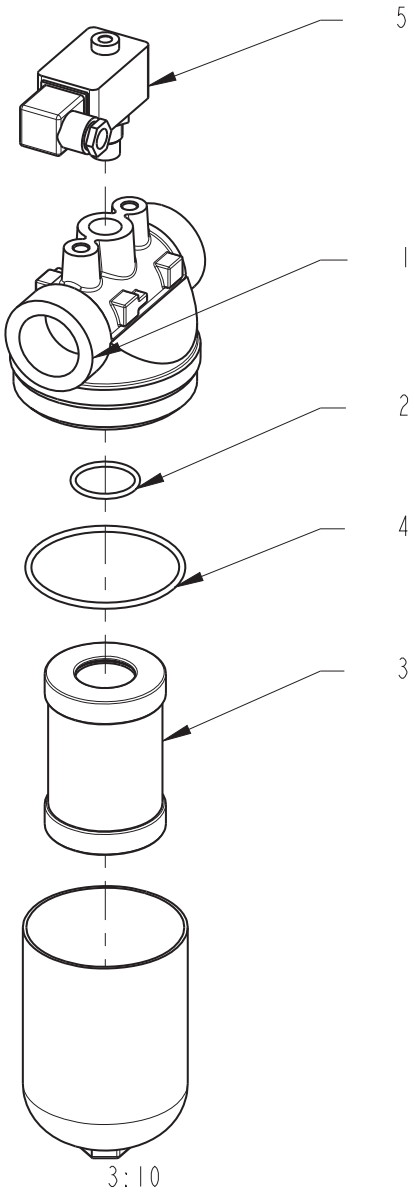

6-4723042800
458988

Pos	Part No	SP h	UN	Qty	Description	Page No
1	6-4723 0430 01		PC	1	Complete House 160	
2	315202-0221		PC	1	O-ring 34.2x3 mm	
3	6-4723 0432 01		PC	1	Filter Patron 160	
4	344207-3091		PC	1	O-ring 91,67x3,53 mm FDA, 3-A	
5	6-4723 0420 01		PC	1	Clogging Guard	

Pos	Part No	SP h	UN	Qty	Description	Page No

Spacer piece

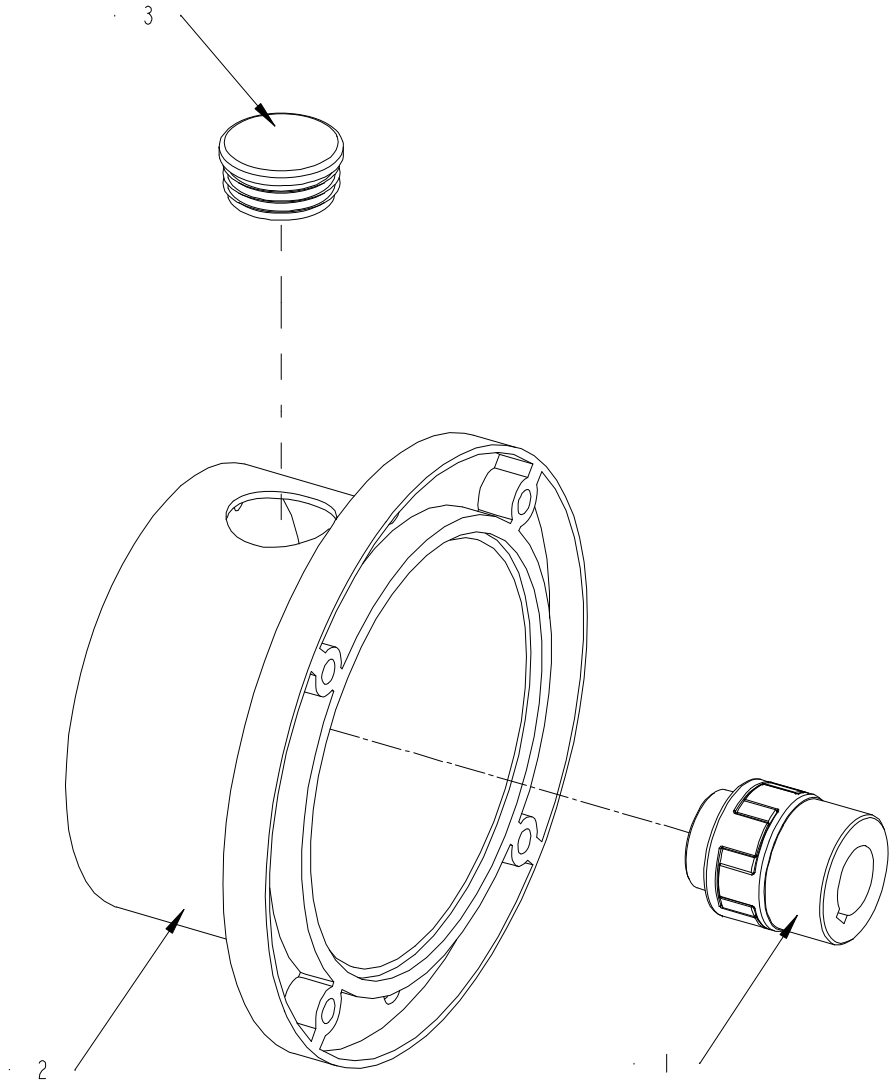

6-4722727900
ECM-184910

Pos	Part No	SP h	UN	Qty	Description	Page No
1	90459-2318		PC	1	Flexible coupling, 17x28 mm	
2	90459-2336		PC	1	Bellhousing, RV250/110/441	
3	6-4648 0000 04		PC	1	Plug 46	

Pos	Part No	SP h	UN	Qty	Description	Page No

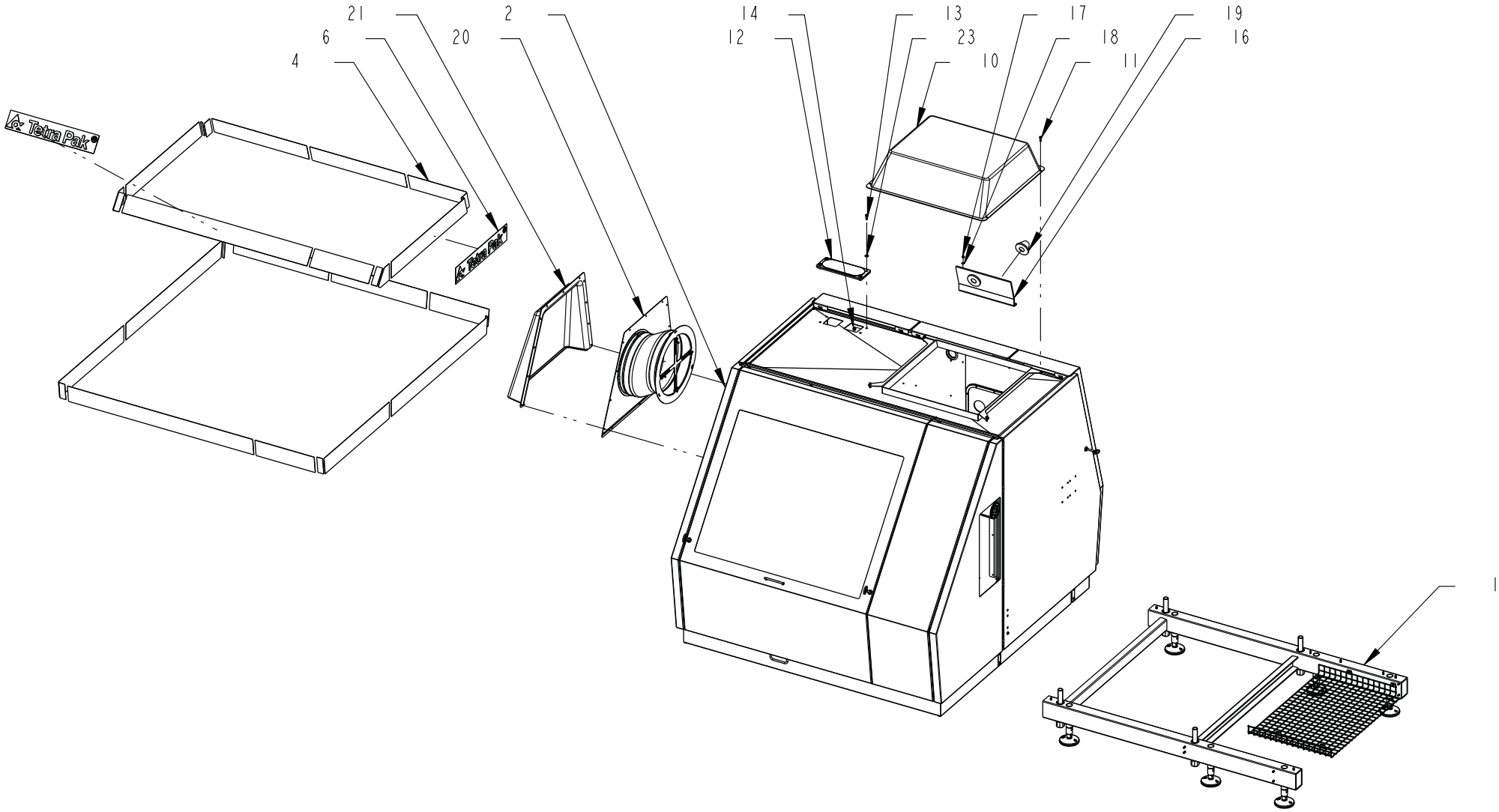
21
6
4
20
2
14
12
13
23
10
17
18
11
19
16
1
Tetra Pak
Tetra Pak
6-4722710900
723823

Pos	Part No	SP h	UN	Qty	Description	Page No
1	6-4723 0902 80		PC	1	Lower Frame M400	
2	6-4722 7188 80		PC	1	Body complete M400	
4	6-4722 8534 01		M	16,5	Stripe blue, B=120 mm	
6	90511-0147		PC	2	Logotype “Tetra Pak” for stripe 120mm	
10	6-4722 7879 01		PC	1	ROOFTOP M350, M400	
11	312115-0451		PC	4	Screw ISO4762 M8x20 A4 80	
12	6-4722 9040 01		PC	1	Flange FL 33	
13	312105-0493		PC	4	Screw, M6S ISO 4017 M10x25 A4 80	
14	312812-0320		PC	4	Hexagon nut, Ny-Lock M10 A4 80	
20	6-4723 1999 80		PC	1	INNER VENTILATION COMPLETE, M400	
21	6-4723 1782 01		PC	1	VENTILATION SIDE COVER	
23	315105-0173		PC	4	Washer plain, 10,5x22x2 A4 BRB	
26	6-4722 8624 01		PC	1	FLANGE SEALING FLP 33	

Pos	Part No	SP h	UN	Qty	Description	Page No

Lower Frame M400

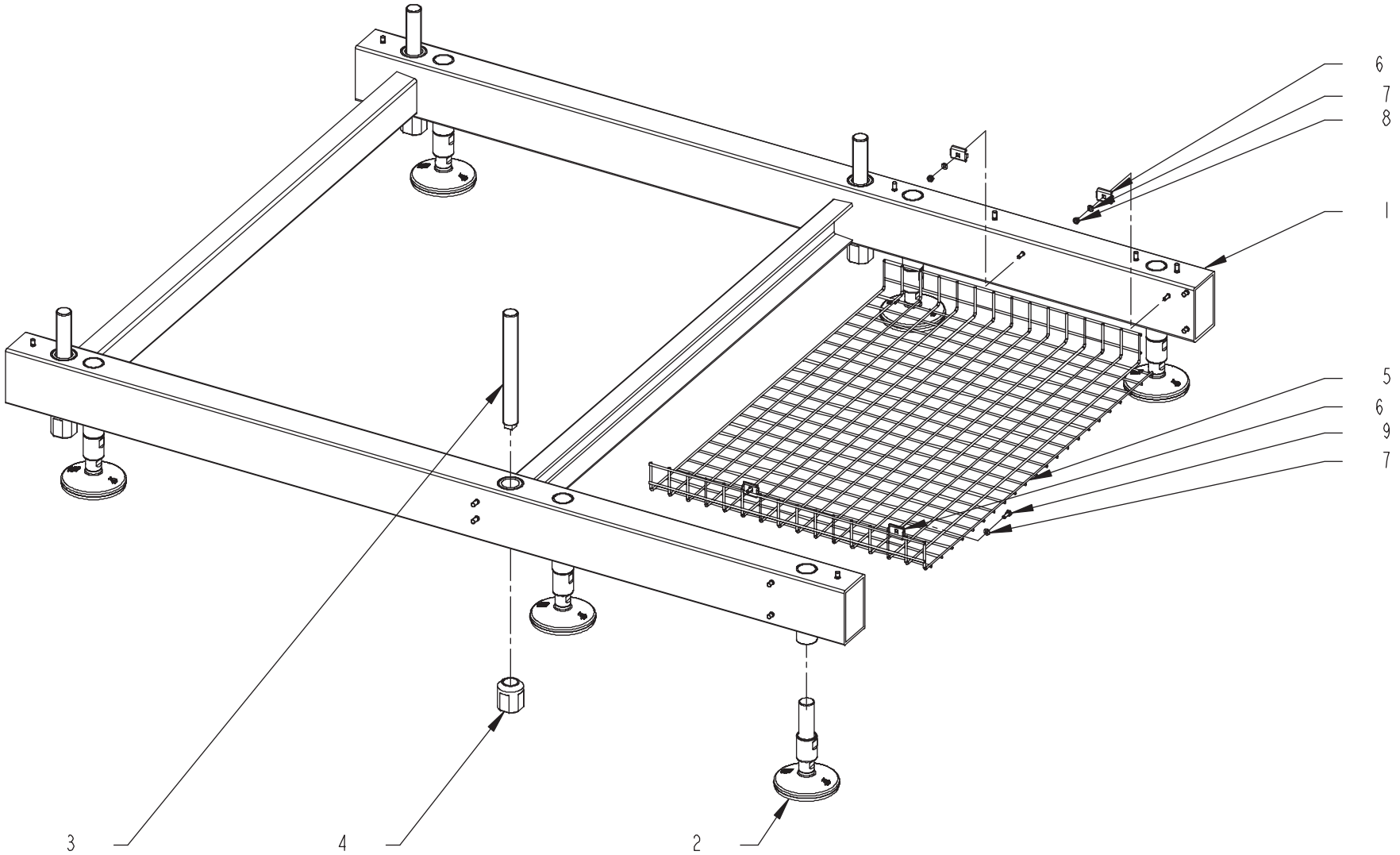

6-4723090200
601556

Pos	Part No	SP h	UN	Qty	Description	Page No
1	6-4723 0901 01		PC	1	FRAME M400	
2	6-4723 0885 01		PC	6	Machine foot 3A	
3	6-4723 0903 01		PC	4	Threaded bar M30x2	
4	6-4723 0887 01		PC	4	Capnut M30x2	
5	6-4723 1263 01		PC	1	Belt protection M400	
6	90181-0183		PC	4	Cable Duct, Fitting, SB-102-S	
7	315105-0153		PC	4	Washer plain, 6,4x12x1,5 A4 BRB	
8	312812-0316		PC	2	Hexagon nut, Ny-Lock M6 A4 80	
9	312105-0368		PC	2	Screw, M6S ISO 4017 M6x16 A4 80	

Pos	Part No	SP h	UN	Qty	Description	Page No

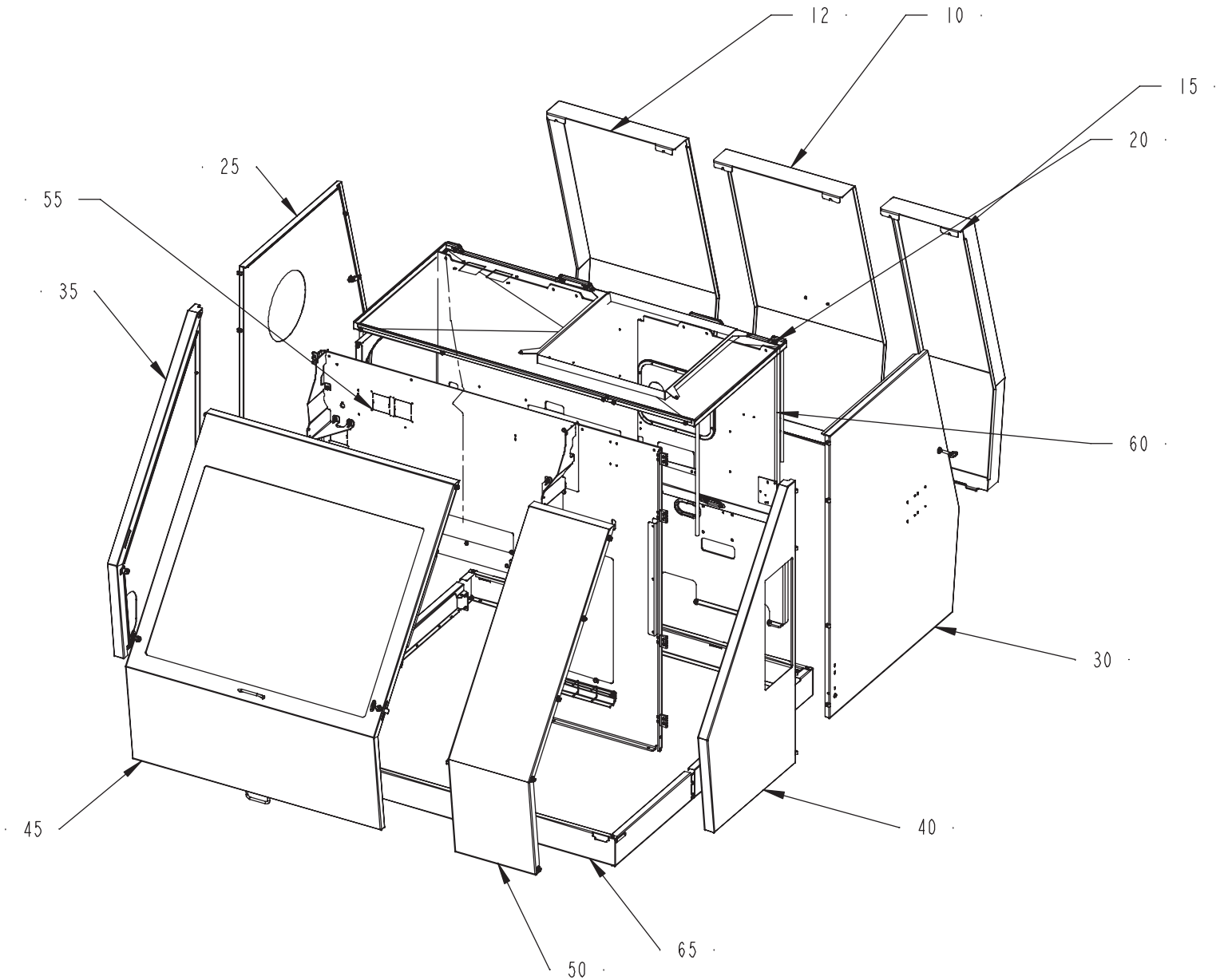

6-4722718800
511819

Pos	Part No	SP h	UN	Qty	Description	Page No
10	6-4722 8068 80		PC	1	CLADDING BACK SIDE COMPLETE	
12	6-4722 8080 80		PC	1	CLADDING BACK SIDE COMPLETE	
15	6-4722 8069 80		PC	1	CLADDING BACK SIDE COMPLETE	
20	6-4722 9294 80		PC	1	Roof complete M400	
25	6-4722 8071 80		PC	1	CLADDING REAR DOOR LEFT COMPLETE	
30	6-4722 8072 80		PC	1	CLADDING REAR DOOR RIGHT COMPLETE	
35	6-4722 8073 80		PC	1	CLADDING FRONT DOOR LEFT COMPLETE	
40	6-4722 9360 80		PC	1	Cladding front door right complete	
45	6-4722 8075 80		PC	1	CLADDING FRONT HOOD COMPLETE	
50	6-4722 8076 80		PC	1	CLADDING FRONT EXTENSION COMPLETE	
55	6-4722 8077 80		PC	1	FRONT MIDDLE WALL COMPLETE	
60	6-4722 8078 80		PC	1	REAR MIDDLE WALL COMPLETE	
65	6-4722 8079 80		PC	1	Frame plate complete	

Pos	Part No	SP h	UN	Qty	Description	Page No

Cladding Back Side

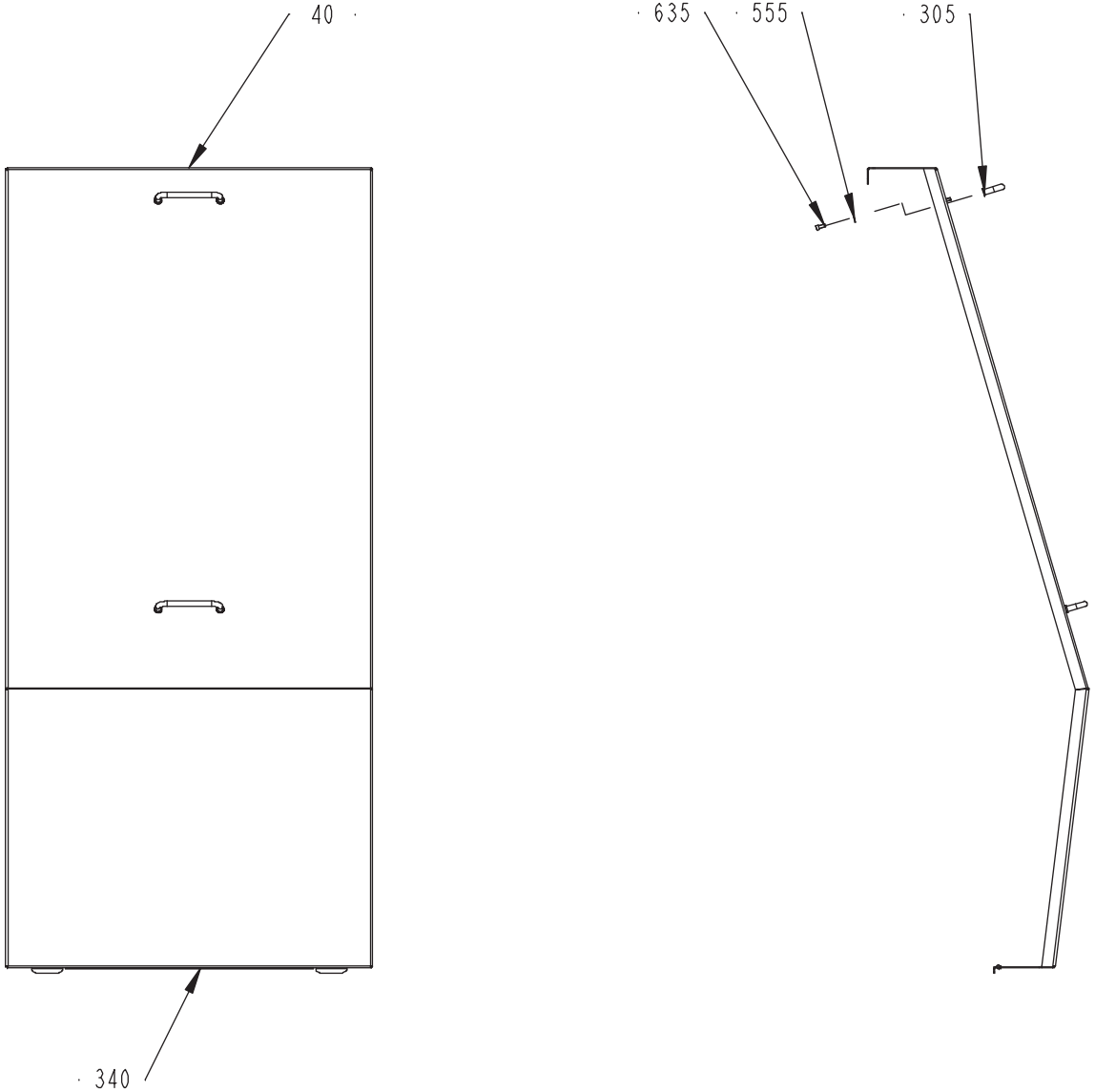

6-4722806800
511819

Pos	Part No	SP h	UN	Qty	Description	Page No
40	6-4723 0737 01		PC	1	Cladding back side	
305	6-4722 7508 01		PC	2	Handle	
340	90143-0060		M	1	Edge Strip 9,5X6,3Mm Black Pvc	
555	315105-0146		PC	4	Washer plain, 5,3x10x1 A4 BRB	
635	312115-0327		PC	4	Screw ISO4762 M5x12 A4 80	

Pos	Part No	SP h	UN	Qty	Description	Page No

Cladding Back Side

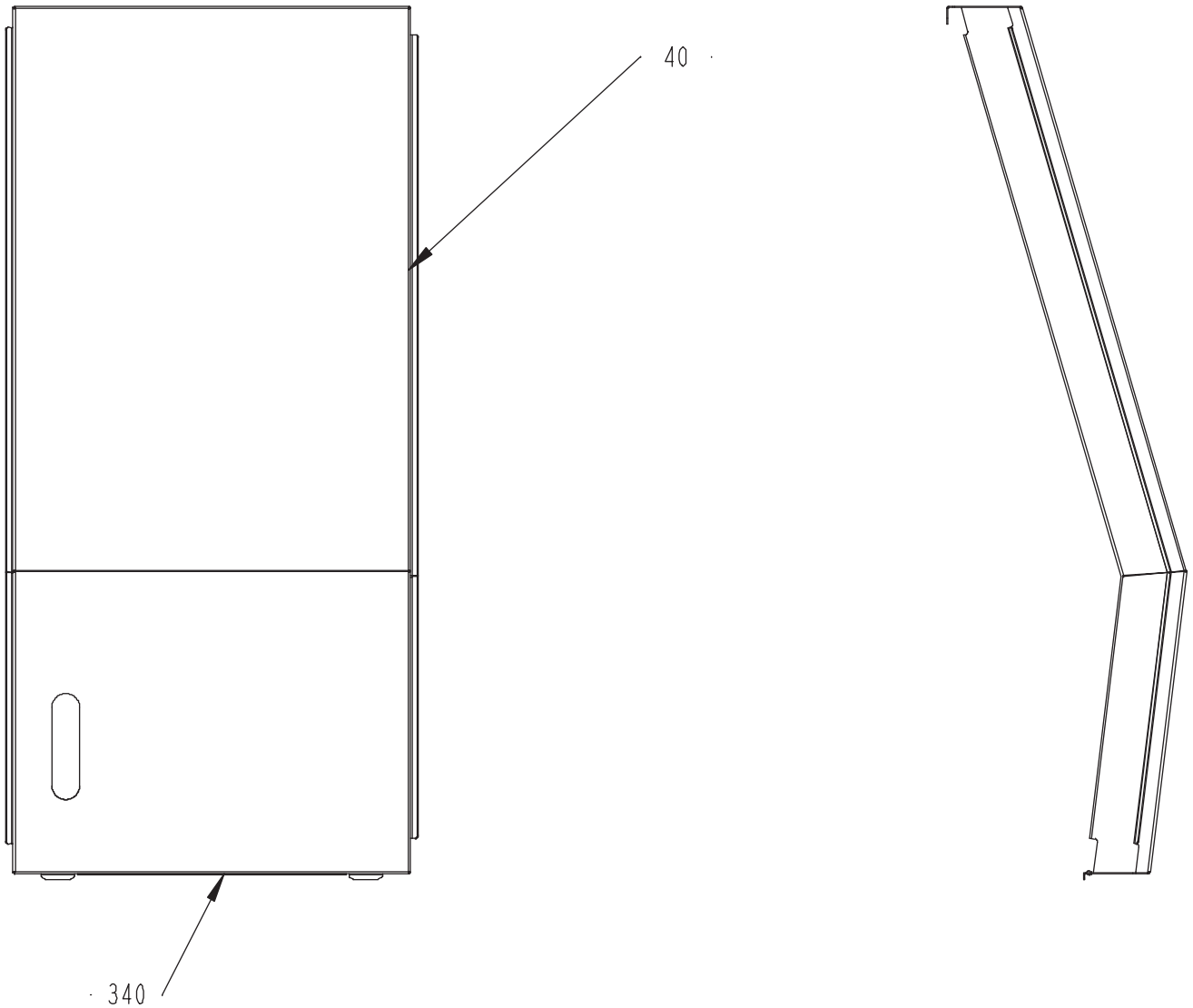

6-4722808000
511819

Pos	Part No	SP h	UN	Qty	Description	Page No
40	6-4723 0736 01		PC	1	Cladding back side	
340	90143-0060		M	1	Edge Strip 9,5X6,3Mm Black Pvc	

Pos	Part No	SP h	UN	Qty	Description	Page No

Cladding Back Side

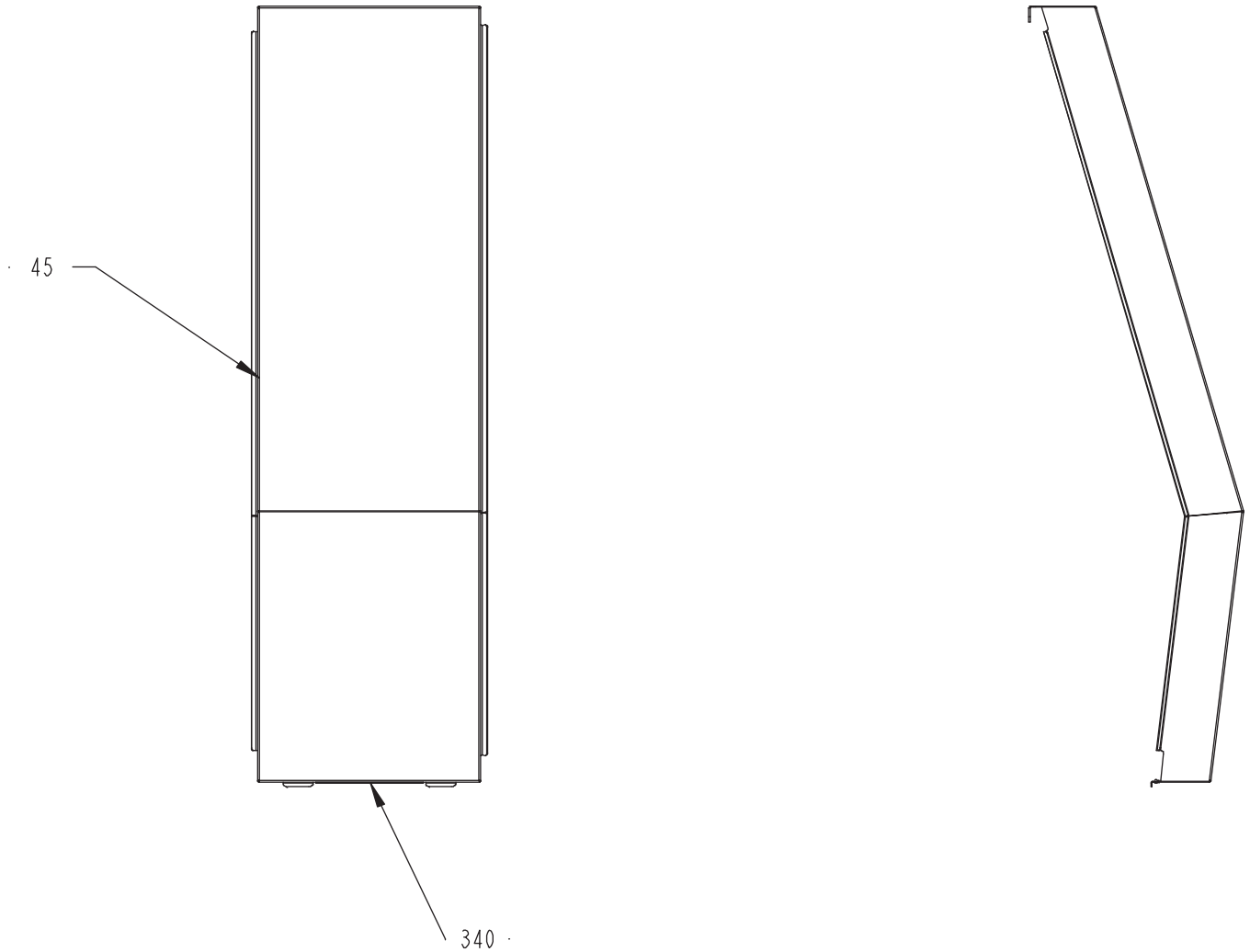

6-4722806900
511819

Pos	Part No	SP h	UN	Qty	Description	Page No
45	6-4723 0738 01		PC	1	Cladding back side	
340	90143-0060		M	1	Edge Strip 9,5X6,3Mm Black Pvc	

Pos	Part No	SP h	UN	Qty	Description	Page No

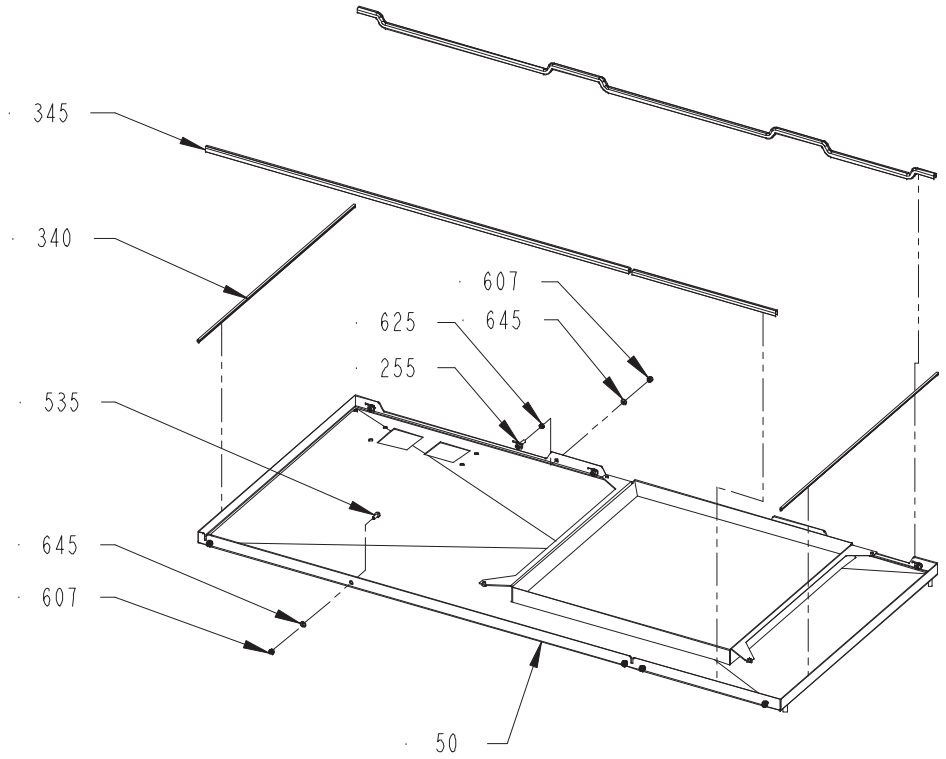

6-4722929400
598647

Pos	Part No	SP h	UN	Qty	Description	Page No
50	6-4723 0281 01		PC	1	ROOF M400	
255	6-4722 7253 01		PC	6	STEERING WORM	
340	90143-0060		M	1,8	Edge Strip 9,5X6,3Mm Black Pvc	
345	6-4722 7231 01		MM	3700	Rubber moulding EMKA 1010-06	
535	312105-0451		PC	5	Screw, M6S ISO 4017 M8x20 A4 80	
607	312812-0318		PC	11	Hexagon nut, Ny-Lock M8 A4 80	
625	312625-0318		PC	6	Hexagon Thin Nut, EN 24035 ML6M M8 A4	
645	315105-0165		PC	11	FWAS080G0-0S, Washer plain	

Pos	Part No	SP h	UN	Qty	Description	Page No

Cladding Rear Door Left Complete

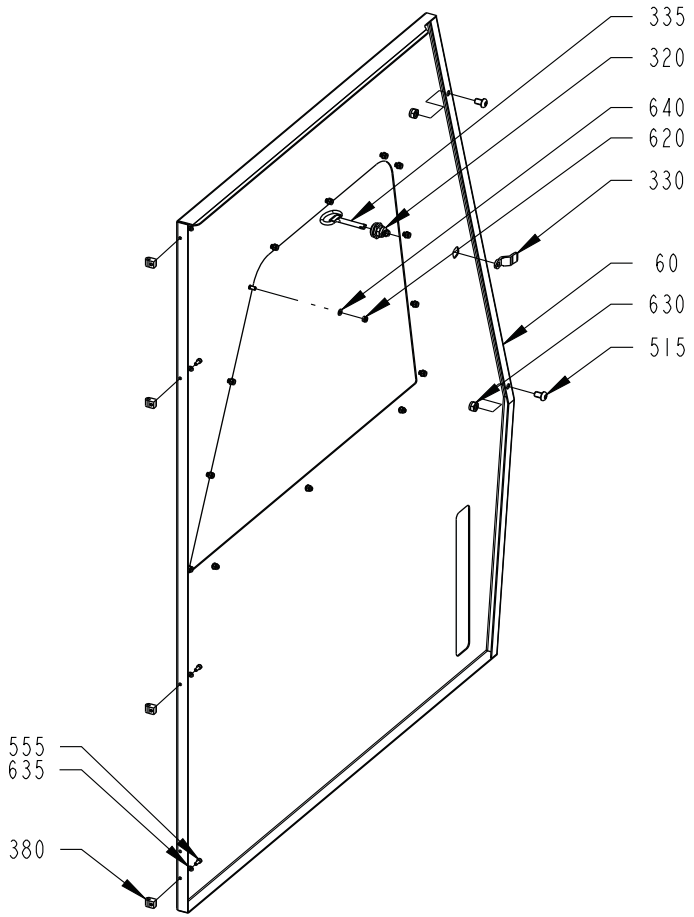

6-4722807100
723823

Pos	Part No	SP h	UN	Qty	Description	Page No
60	6-4723 1997 01		PC	1	CLADDING REAR DOOR, LEFT SIDE	
320	6-4722 7254 01		PC	1	Lock EMKA 1000-U 691 RH	
330	90237-0143		PC	1	Lock Cam, 1000-26	
335	6-4722 7229 01		PC	1	Key EMKA 1004-05	
380	1035794-0000		PC	4	Blocking Piece	
515	6-4722 7226 04		PC	2	Screw K6S 10 x 16 ISO 7380 A2	
555	312115-0327		PC	4	Screw ISO4762 M5x12 A4 80	
620	312812-0316		PC	14	Hexagon nut, Ny-Lock M6 A4 80	
630	312812-0320		PC	2	Hexagon nut, Ny-Lock M10 A4 80	
635	315105-0146		PC	4	Washer plain, 5,3x10x1 A4 BRB	
640	315105-0153		PC	14	Washer plain, 6,4x12x1,5 A4 BRB	

Pos	Part No	SP h	UN	Qty	Description	Page No

Cladding Rear Door Right

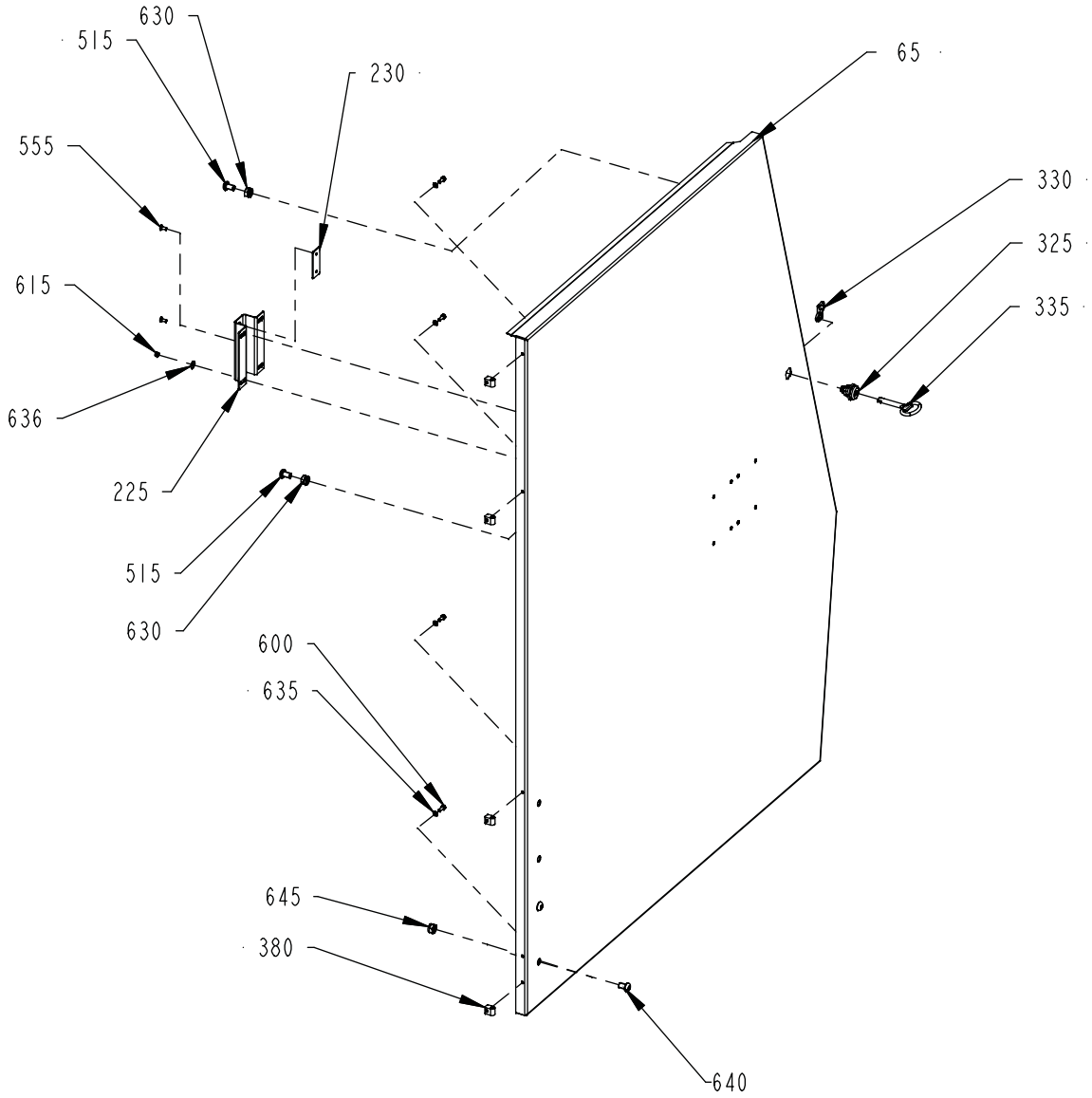

6-4722807200
763520

Pos	Part No	SP	h	UN	Qty	Description	Page No
65	6-4722 7195 01			PC	1	CLADDING REAR DOOR RIGHT	
225	6-4722 7235 01			PC	1	Safety switch bracket	
230	6-4722 8817 01			PC	1	Tightening plate	
325	6-4722 7227 01			PC	1	Lock EMKA 1000-U 692 LH	
330	90237-0143			PC	1	Lock Cam, 1000-26	
335	6-4722 7229 01			PC	1	Key EMKA 1004-05	
380	1035794-0000			PC	4	Blocking Piece	
515	6-4722 7226 04			PC	2	Screw K6S 10 x 16 ISO 7380 A2	
555	312115-0327			PC	2	Screw ISO4762 M5x12 A4 80	
600	312155-0327			PC	4	Screw DIN 7991 MF6S M5x12 A4 70	
615	312812-0314			PC	4	Hexagon nut, Ny-Lock M5 A4 80	
630	312812-0320			PC	2	Hexagon nut, Ny-Lock M10 A4 80	
635	315105-0146			PC	4	Washer plain, 5,3x10x1 A4 BRB	
636	90005-0114			PC	4	Washer Plain Round 5,3(M5)/15, H=1	
640	6-4722 7226 04			PC	2	Screw K6S 10 x 16 ISO 7380 A2	
645	312812-0320			PC	2	Hexagon nut, Ny-Lock M10 A4 80	

Pos	Part No	SP	h	UN	Qty	Description	Page No

Cladding Front Door Left Complete

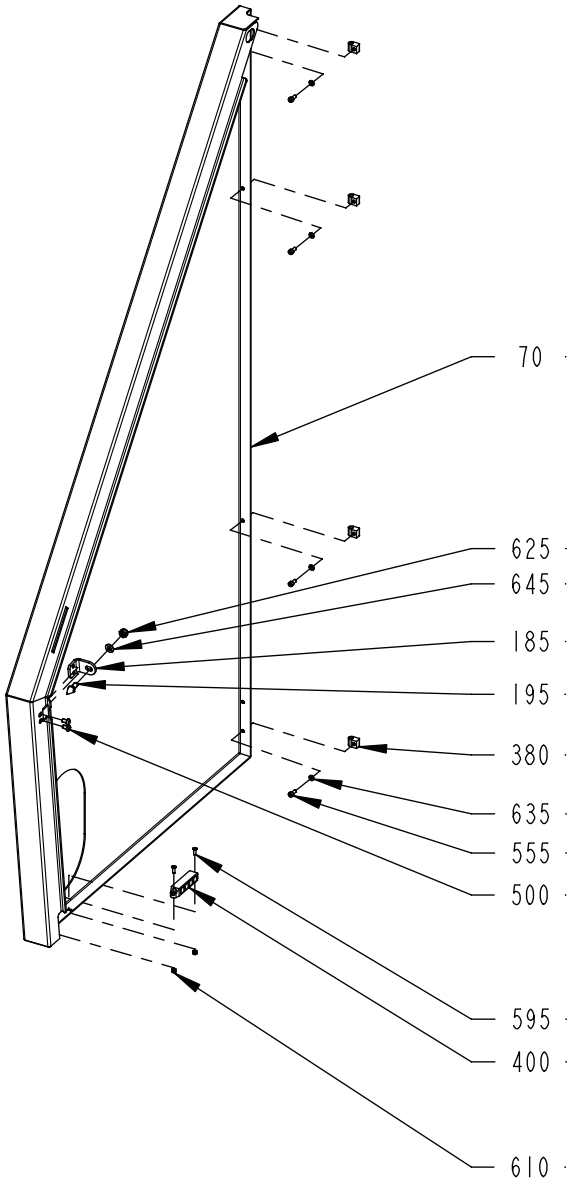

6-4722807300
722657

Pos	Part No	SP h	UN	Qty	Description	Page No
70	6-4722 7196 01		PC	1	CLADDING FRONT DOOR LEFT	
185	6-4722 7218 01		PC	1	LOCK BRACKET	
195	6-4722 7220 01		PC	1	Guide screw	
380	1035794-0000		PC	4	Blocking Piece	
400	90237-0071		PC	1	Magnetic Lock, 92x16x15,5 mm	
500	6-4722 7226 01		PC	2	Screw K6S 6 x 10 ISO 7380 A2	
555	312115-0327		PC	4	Screw ISO4762 M5x12 A4 80	
595	312155-0291		PC	2	Screw DIN 7991 MF6S M4x12 A4 70	
610	312812-0312		PC	2	Hexagon nut, Ny-Lock M4 A4 80	
625	312812-0318		PC	1	Hexagon nut, Ny-Lock M8 A4 80	
635	315105-0146		PC	4	Washer plain, 5,3x10x1 A4 BRB	
645	315105-0165		PC	1	FWAS080G0-0S, Washer plain	

Pos	Part No	SP h	UN	Qty	Description	Page No

Cladding Front Door Right

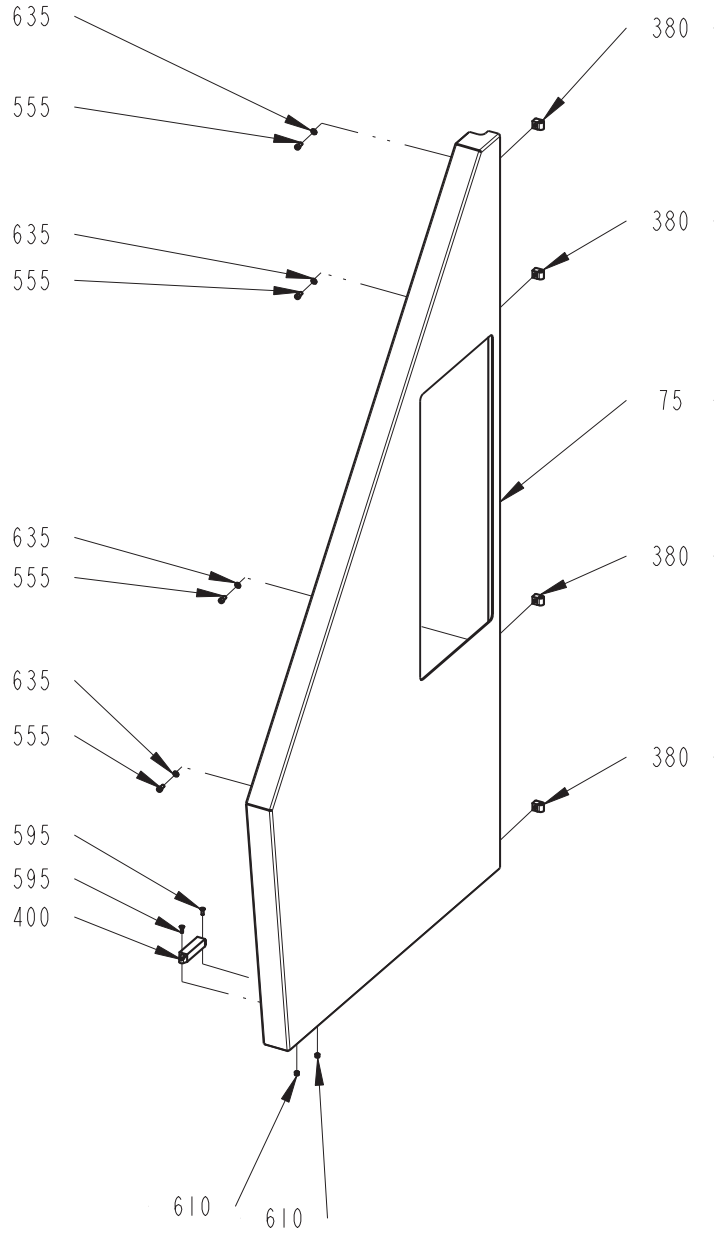

6-4722936000
293032

Pos	Part No	SP h	UN	Qty	Description	Page No
75	6-4722 9361 01		PC	1	Cladding front door right side	
380	1035794-0000		PC	4	Blocking Piece	
400	90237-0071		PC	1	Magnetic Lock, 92x16x15,5 mm	
555	312115-0327		PC	4	Screw ISO4762 M5x12 A4 80	
595	312155-0291		PC	2	Screw DIN 7991 MF6S M4x12 A4 70	
610	312812-0312		PC	2	Hexagon nut, Ny-Lock M4 A4 80	
635	315105-0146		PC	4	Washer plain, 5,3x10x1 A4 BRB	

Pos	Part No	SP h	UN	Qty	Description	Page No

Cladding Front Hood

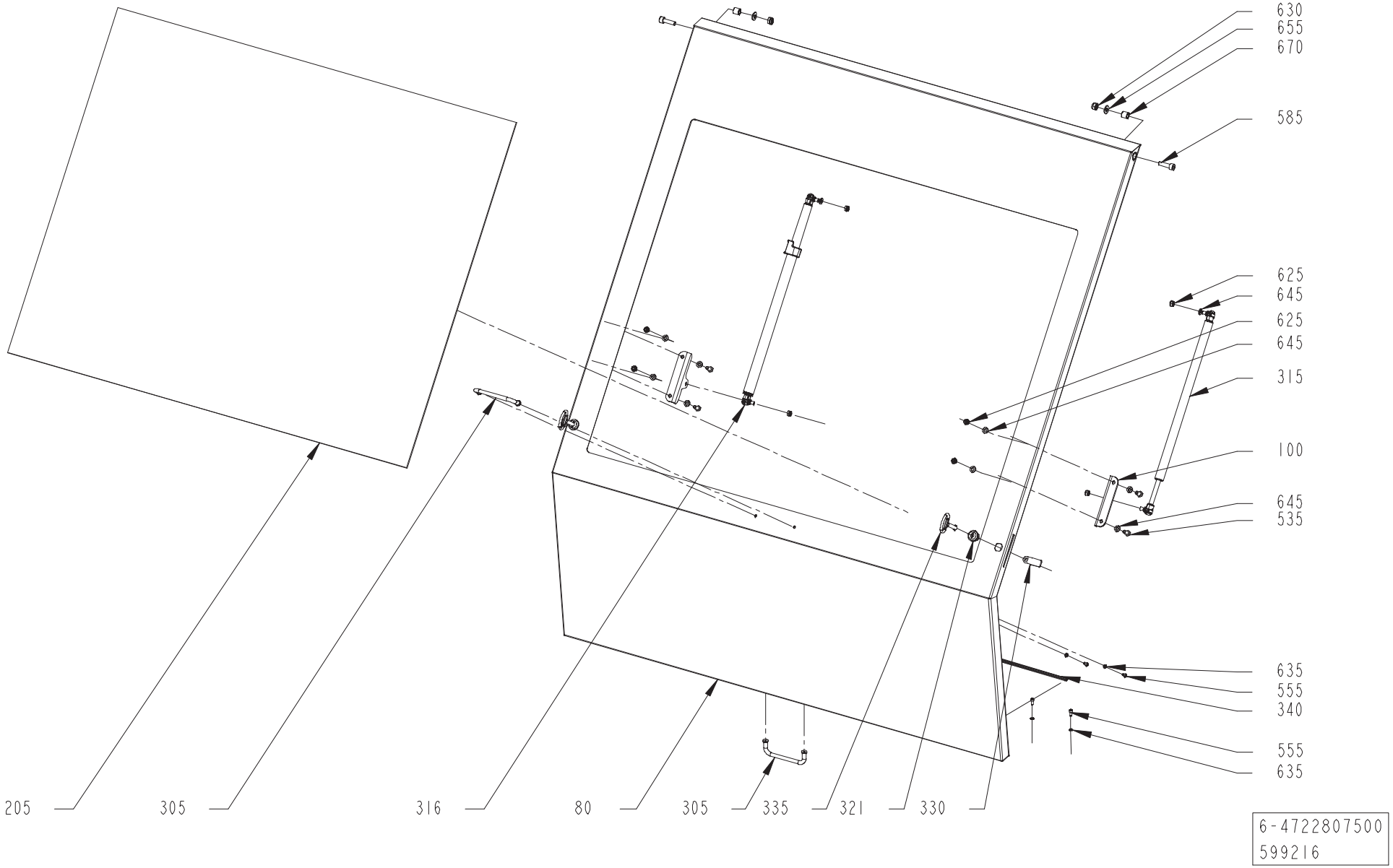

Pos	Part No	SP h	UN	Qty	Description	Page No
80	6-4722 7198 01		PC	1	CLADDING FRONT HOOD	
100	6-4723 1260 01		PC	2	BRACKET, GAS DAMPER	
205	6-4722 7222 01		PC	1	GLASS FRONT HOOD	
305	6-4722 7508 01		PC	2	Handle	
315	6-4723 1246 01		PC	1	GAS DAMPER	
316	6-4723 1246 02		PC	1	GAS DAMPER WITH SAFETY LOCK	
321	6-4723 0034 01		PC	2	Lock Housing	
330	6-4723 0291 01		PC	2	Lock Cam EMKA 1000-476	
335	6-4722 7229 01		PC	2	Key EMKA 1004-05	
340	90143-0060		M	1	Edge Strip 9,5X6,3Mm Black Pvc	
535	312105-0451		PC	4	Screw, M6S ISO 4017 M8x20 A4 80	
555	312115-0327		PC	4	Screw ISO4762 M5x12 A4 80	
585	312115-0497		PC	2	Screw ISO4762 M10x35 A4 80	
625	312812-0318		PC	8	Hexagon nut, Ny-Lock M8 A4 80	
630	312812-0320		PC	2	Hexagon nut, Ny-Lock M10 A4 80	
635	315105-0146		PC	4	Washer plain, 5,3x10x1 A4 BRB	
645	315105-0165		PC	10	FWAS080G0-0S, Washer plain	
655	315105-0173		PC	2	Washer plain, 10,5x22x2 A4 BRB	
670	321105-0164		PC	2	Bushing w/o flange, 10/16x16 mm	

Pos	Part No	SP h	UN	Qty	Description	Page No

Cladding Front Extension

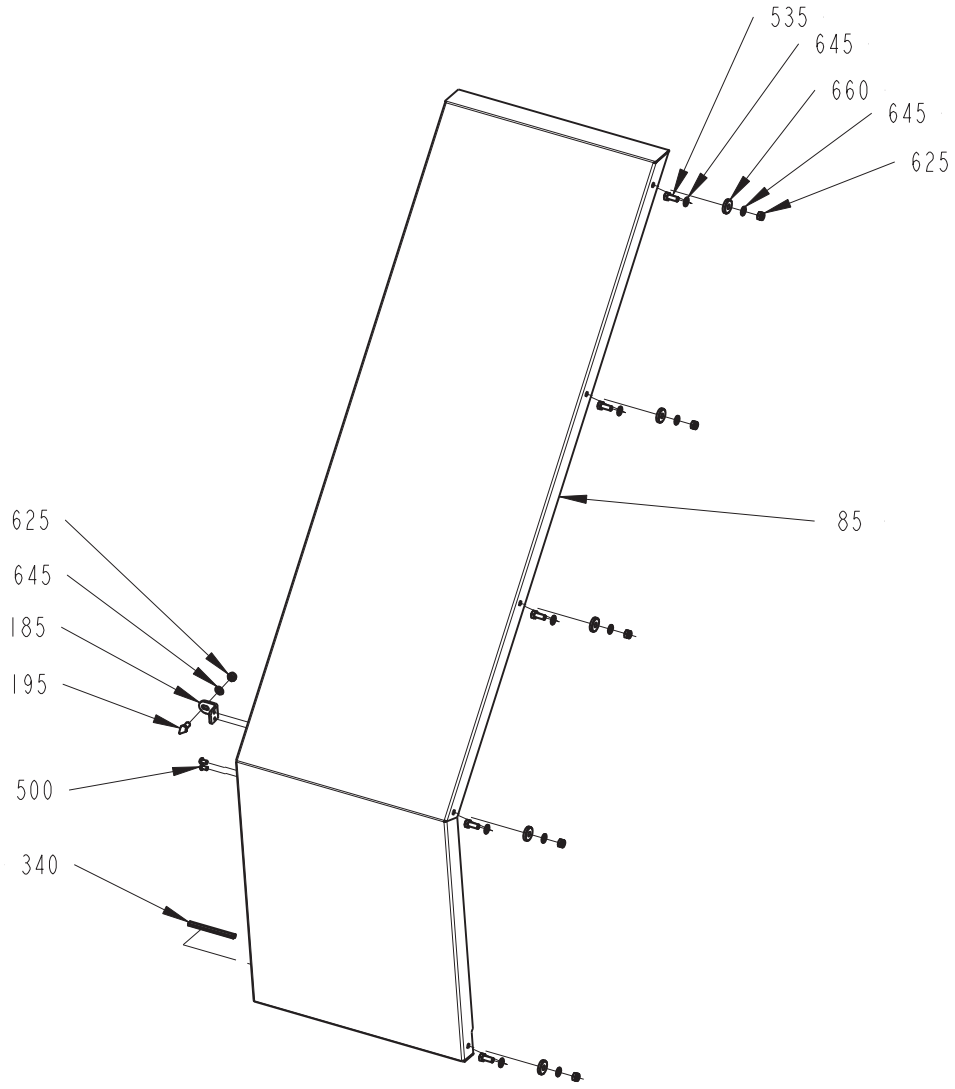

6-4722807600
ECM 73820

Pos	Part No	SP h	UN	Qty	Description	Page No
85	6-4722 7199 01		PC	1	CLADDING FRONT EXTENSION	
185	6-4722 7218 01		PC	1	LOCK BRACKET	
195	6-4722 7220 01		PC	1	Guide screw	
340	90143-0060		M	1	Edge Strip 9,5X6,3Mm Black Pvc	
500	6-4722 7226 01		PC	2	Screw K6S 6 x 10 ISO 7380 A2	
535	312105-0451		PC	5	Screw, M6S ISO 4017 M8x20 A4 80	
625	312812-0318		PC	6	Hexagon nut, Ny-Lock M8 A4 80	
645	315105-0165		PC	11	FWAS080G0-0S, Washer plain	
660	315125-0165		PC	5	Washer high, TBRSB 8,4x26x5 A4	

Pos	Part No	SP h	UN	Qty	Description	Page No

Front Middle Wall

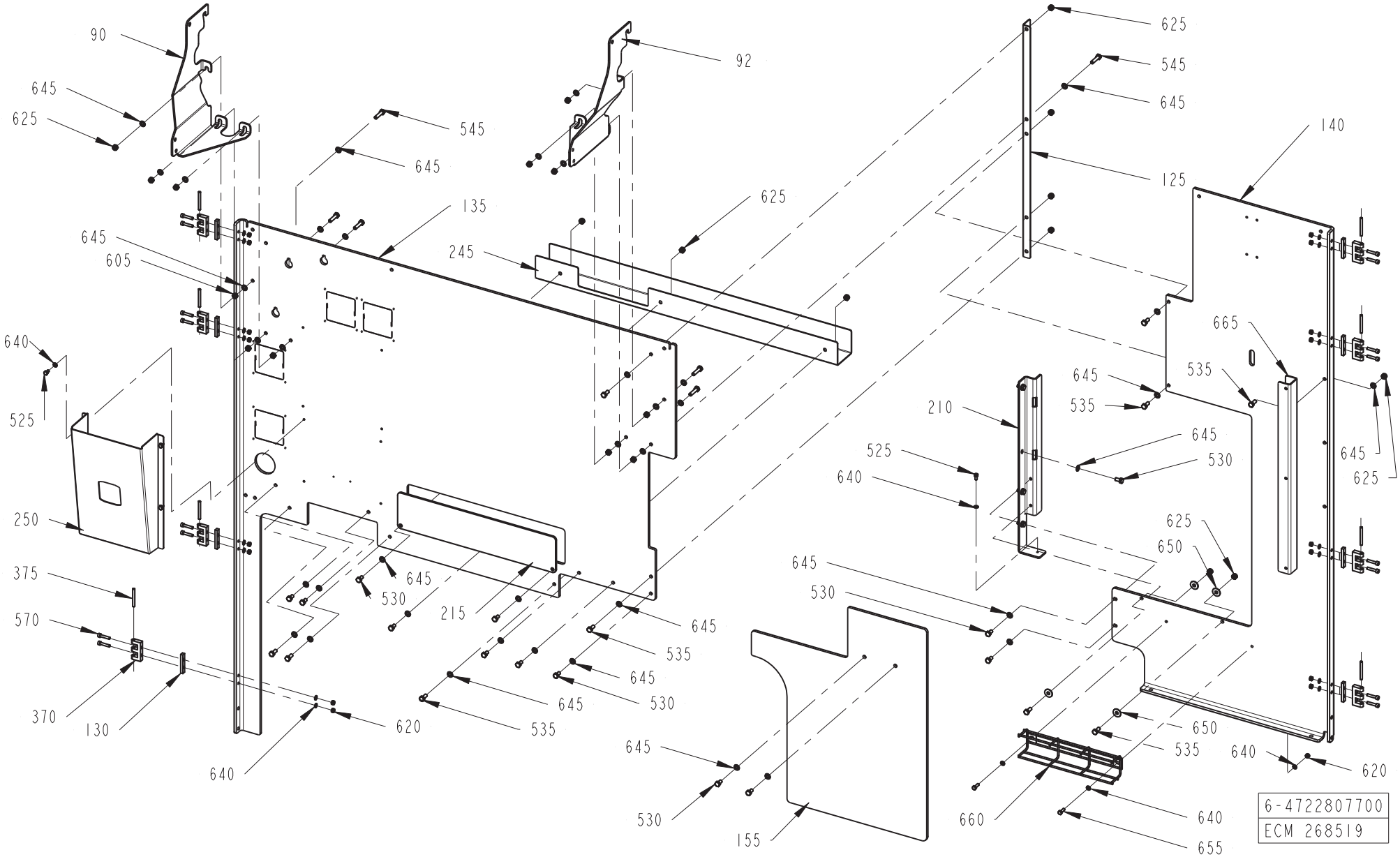

Pos	Part No	SP h	UN	Qty	Description	Page No
90	6-4722 7463 01		PC	1	Cantilever	
95	6-4722 7463 02		PC	1	Cantilever	
125	6-4722 7207 01		PC	1	Cantilever	
130	6-4722 7208 01		PC	8	Spacer	
135	6-4722 9303 01		PC	1	Front wall left side M400	
140	6-4722 9299 01		PC	1	Front wall right side M400	
155	6-4722 9300 01		PC	1	Lid	
210	6-4722 9301 01		PC	1	Bracket	
215	6-4722 7224 01		PC	1	Lid middle wall	
245	6-4722 7342 01		PC	1	Cable duct front	
250	6-4722 7343 01		PC	1	COVER PLATE	
370	1035792-0000		PC	8	E-Hinge	
375	1035793-0000		PC	8	Pin	
530	312105-0449		PC	16	Screw, M6S ISO 4017 M8x16 A4 80	
535	312105-0451		PC	12	Screw, M6S ISO 4017 M8x20 A4 80	
545	312109-0457		PC	6	Screw, M6S ISO 4017 M8x35 A4 80	
570	312115-0374		PC	16	Screw ISO4762 M6x30 A4 80	
605	312605-0318		PC	6	Hexagon Nut, M6M M8 A280	
620	312812-0316		PC	18	Hexagon nut, Ny-Lock M6 A4 80	
625	312812-0318		PC	18	Hexagon nut, Ny-Lock M8 A4 80	
640	315105-0153		PC	24	Washer plain, 6,4x12x1,5 A4 BRB	
645	315105-0165		PC	44	FWAS080G0-0S, Washer plain	
650	90005-0105		PC	4	Washer Plain Round 8,4(M8)/24, H=1,5	
655	312105-0370		PC	2	Screw, M6S ISO 4017 M6x20 A4 80	
660	6-4722 9304 01		PC	1	Hose duct	
665	6-4722 9358 01		PC	1	Adapter plate	

Pos	Part No	SP h	UN	Qty	Description	Page No

Rear Middle Wall Complete

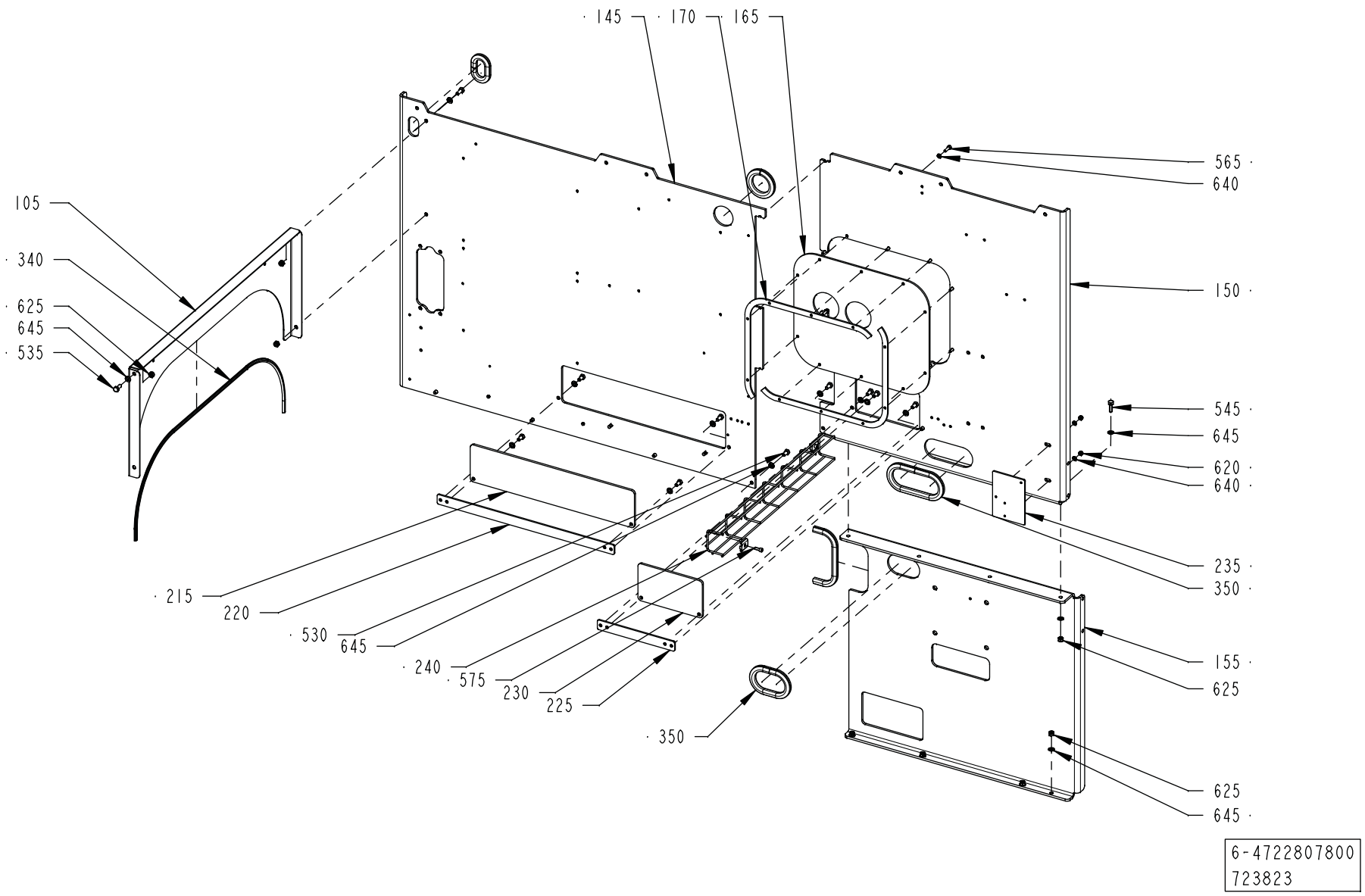

Pos	Part No	SP h	UN	Qty	Description	Page No
105	6-4722 7203 01		PC	1	Support plate	
145	6-4723 1411 01		PC	1	Rear wall left side	
150	6-4723 1967 01		PC	1	Rear wall, upper right	
155	6-4723 1968 01		PC	1	Rear wall, lower right	
165	6-4722 7214 01		PC	1	RUBBER TILE	
170	6-4722 7215 01		PC	2	FRAME RUBBER TILE	
215	6-4722 7224 01		PC	1	Lid middle wall	
220	6-4722 7225 01		PC	1	BRACKET	
225	6-4722 9318 01		PC	1	Holder lid	
230	6-4722 9317 01		PC	1	Lid middle wall	
235	6-4722 7237 01		PC	1	BODY BRACKET	
240	6-4722 9879 01		PC	1	Cable trench 75X4	
340	90143-0060		M	1	Edge Strip 9,5X6,3Mm Black Pvc	
350	6-4722 7231 01		M	1250	Rubber moulding EMKA 1010-06	
530	312105-0449		PC	13	Screw, M6S ISO 4017 M8x16 A4 80	
535	312105-0451		PC	3	Screw, M6S ISO 4017 M8x20 A4 80	
545	312101-0453		PC	4	Screw M6S M8x25 fzb	
565	312115-0370		PC	10	Screw ISO4762 M6x20 A4 80	
575	312115-0368		PC	2	Screw ISO4762 M6x16 A4 80	
620	312812-0316		PC	2	Hexagon nut, Ny-Lock M6 A4 80	
625	312812-0318		PC	11	Hexagon nut, Ny-Lock M8 A4 80	
640	315105-0153		PC	12	Washer plain, 6,4x12x1,5 A4 BRB	
645	315105-0165		PC	28	FWAS080G0-0S, Washer plain	
580	90181-0183		PC	2	Cable Duct, Fitting, SB-102-S	

Pos	Part No	SP h	UN	Qty	Description	Page No

Frame Plate

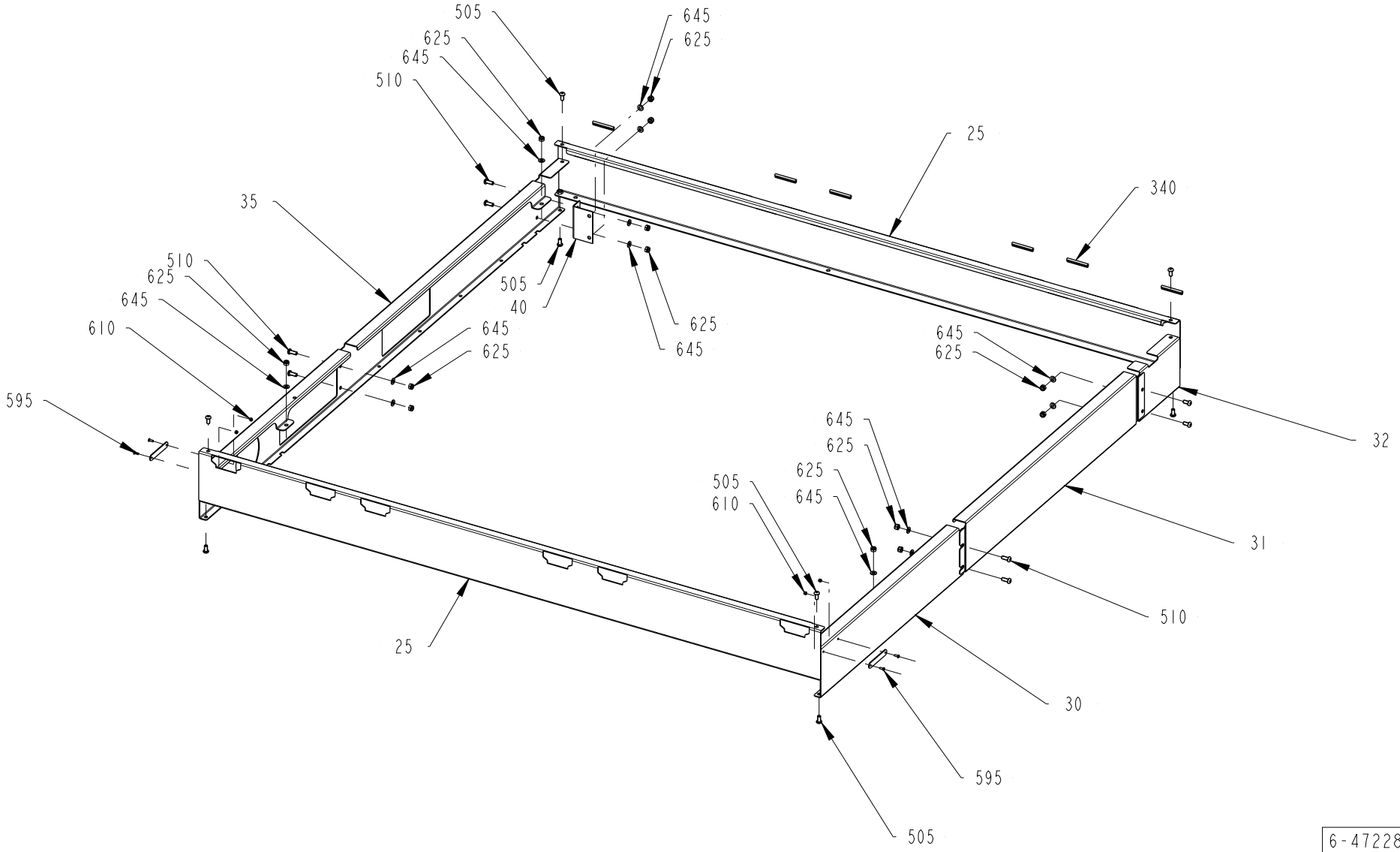

6-4722807900
577802

Pos	Part No	SP h	UN	Qty	Description	Page No
25	6-4722 7185 01		PC	2	FRAME FRONT BACK	
30	6-4722 9291 01		PC	1	Frame right	
31	6-4722 9292 01		PC	1	Frame right	
32	6-4722 9293 01		PC	1	Frame right	
35	6-4722 7187 01		PC	1	FRAME LEFT	
40	6-4722 9266 01		PC	1	Bracket	
340	90143-0060		M	1	Edge Strip 9,5X6,3Mm Black Pvc	
402	6-4722 7226 02		PC	10	Screw K6S 8 x 16 ISO 7380 A2	
510	90603-2760		PC	6	Screw ISO 7380 K6S M8x20 A2	
595	312155-0291		PC	4	Screw DIN 7991 MF6S M4x12 A4 70	
610	312812-0312		PC	4	Hexagon nut, Ny-Lock M4 A4 80	
625	312812-0318		PC	13	Hexagon nut, Ny-Lock M8 A4 80	
645	315105-0165		PC	13	FWAS080G0-0S, Washer plain	

Pos	Part No	SP h	UN	Qty	Description	Page No

Inner Ventilation Complete M400

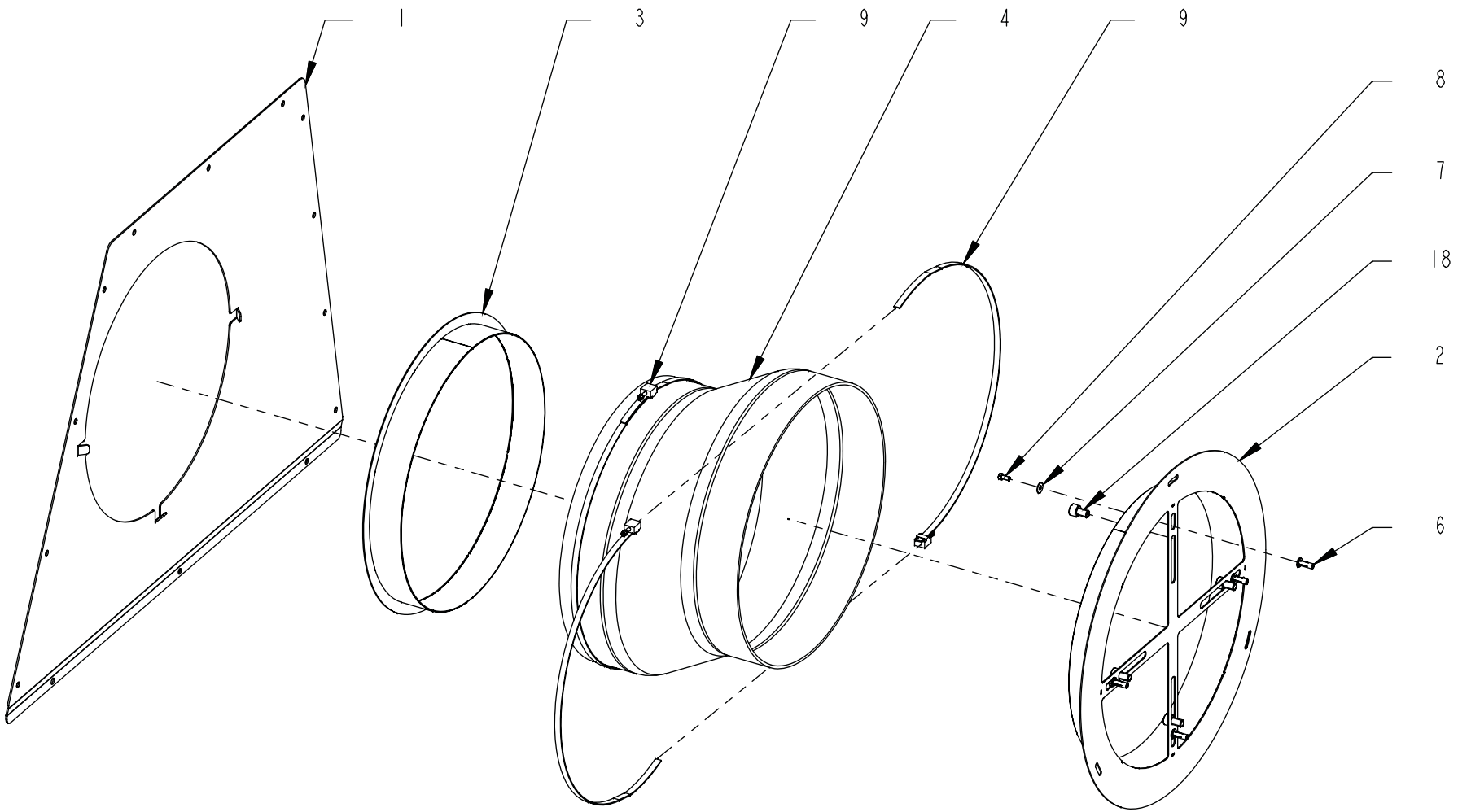

Pos	Part No	SP h	UN	Qty	Description	Page No
1	6-4723 1791 01		PC	1	VENTILATION PLATE	
2	6-4723 2522 01		PC	1	VENTILATION FIX PLATE Ø400	
3	6-4723 2523 01		PC	1	VENTILATION FLANGE Ø400	
4	6-4723 0673 01		PC	1	FLEX TUBE Ø400	
6	6-4723 0586 01		PC	4	RIVKLE PN Rivet Nut M5	
7	90005-0114		PC	4	Washer Plain Round 5,3(M5)/15, H=1	
8	312105-0327		PC	4	Screw, M6S ISO 4017 M5x12 A4 80	
9	6-4723 1286 01		PC	4	HOSE CLAMP Ø60-215	
18	312115-0489		PC	4	Screw ISO4762 M10x16 A4 80	

Pos	Part No	SP h	UN	Qty	Description	Page No

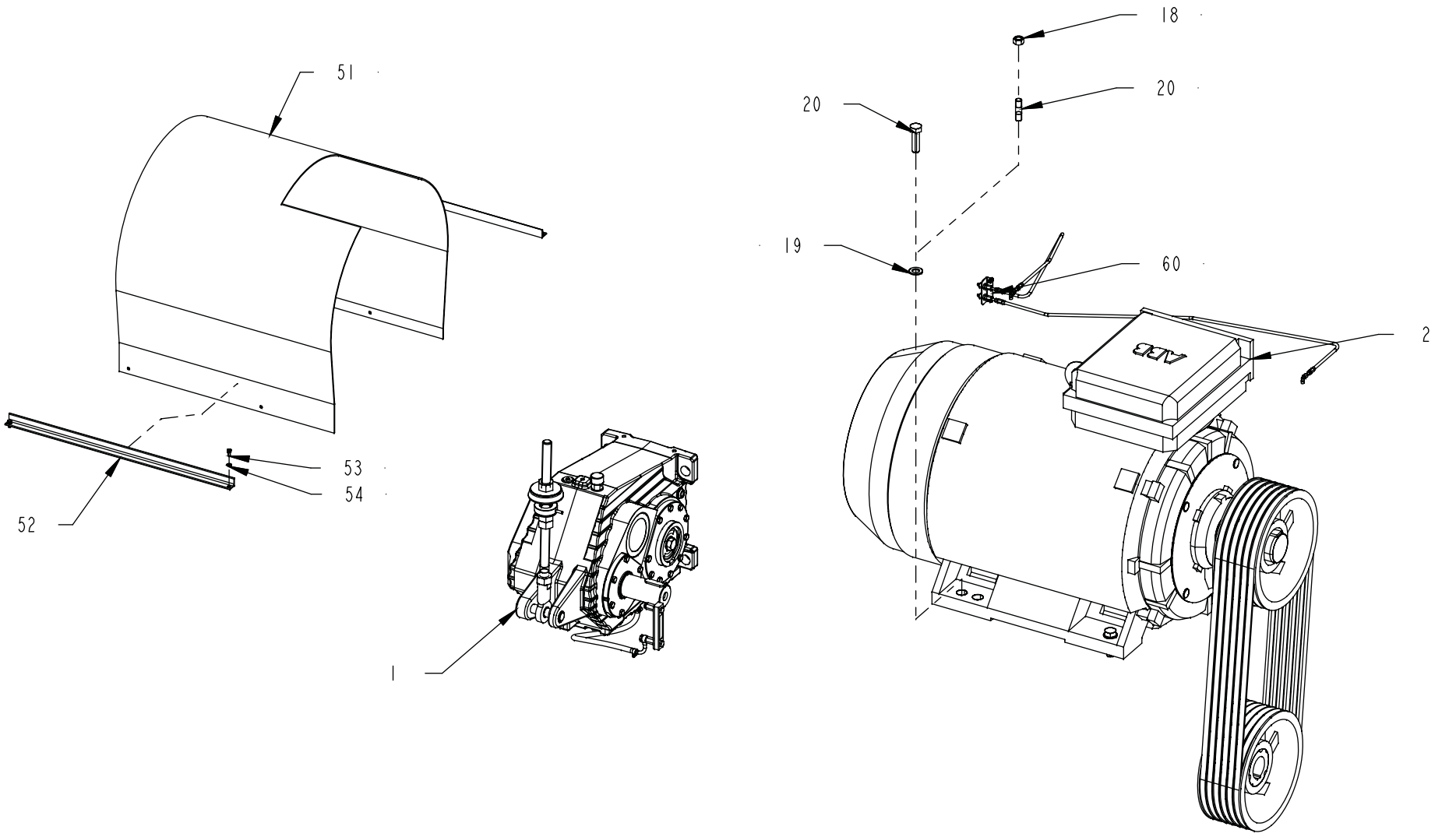

6-4722711000
763520

Pos	Part No	SP h	UN	Qty	Description	Page No
1	6-4722 9310 80		PC	1	Gearbox unit M400	
2	6-4722 8166 80		PC	1	Drive unit	
19	315102-0198		PC	4	Washer Plain, BRFB 25/45 H=4	
20	6-4722 5649 02		PC	4	Screw M6S 24 x 80 DIN 933	
51	6-4722 7464 01		PC	1	Motor sweep	
52	6-4722 7465 01		PC	2	BRACKET MOTOR SWEEP	
53	312105-0449		PC	4	Screw, M6S ISO 4017 M8x16 A4 80	
54	315105-0165		PC	4	FWAS080G0-0S, Washer plain	
60	6-4723 0560 80		PC	1	MOTOR LUBRICATION M350, M400	

Pos	Part No	SP h	UN	Qty	Description	Page No

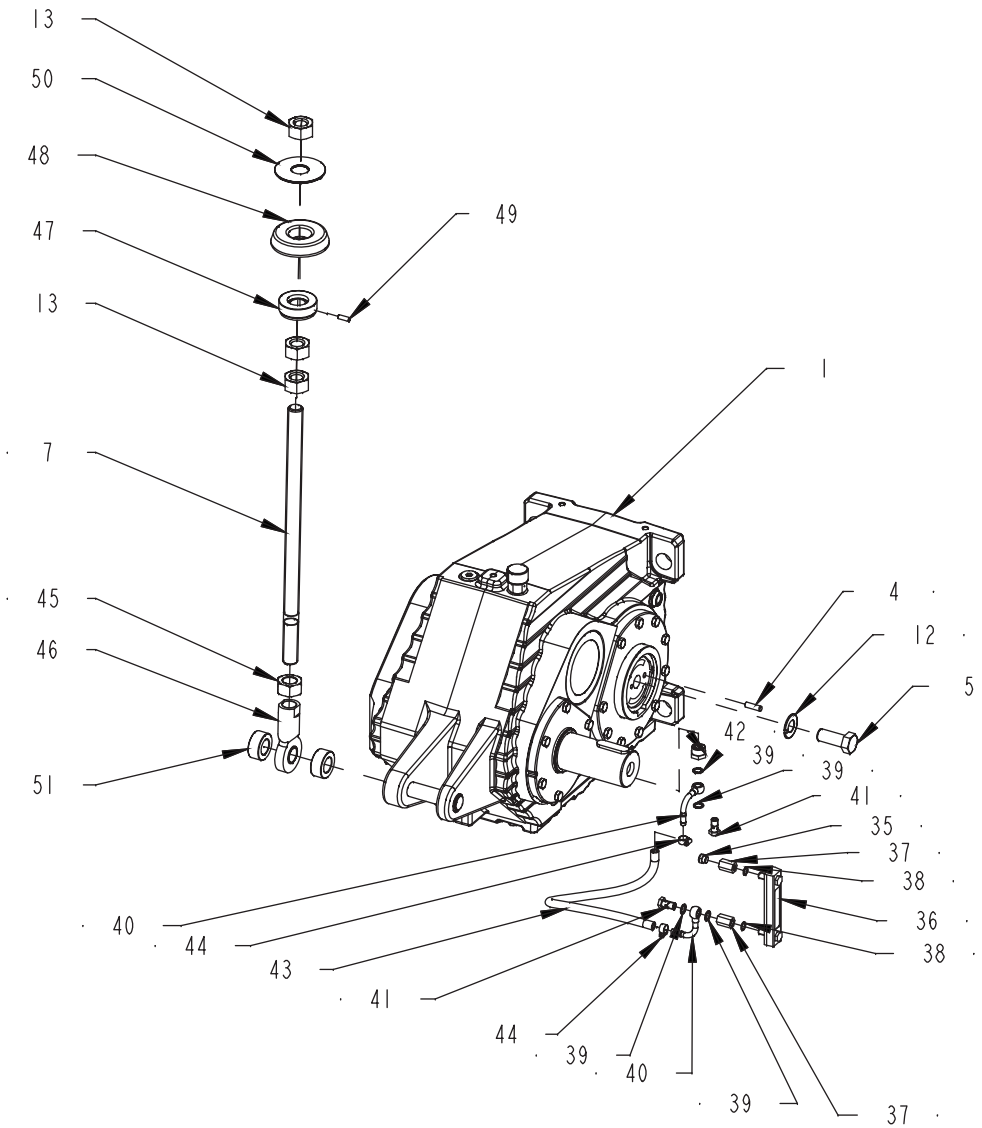

6-4722931000
788924

Pos	Part No	SP h	UN	Qty	Description	Page No
1	6-4723 1508 01		PC	1	GEARBOX M400	
4	311103-0460		PC	1	Parallel pin ISO 2338 10m6x35 A1	
5	6-4723 0844 01		PC	1	SCREW M24x60	
7	6-4722 7170 01		PC	1	Adjusting bolt M400	
12	6-4016 0011 50		PC	1	Washer 25 DIN 432	
13	312601-0330		PC	3	Hexagon Nut, DIN 934 M30 8 FZB	
35	90257-0001		PC	1	Filter Plug Art.No.8145-00-140 Type F14	
36	6-4722 6927 01		PC	1	Oil level glass	
37	6-4722 6940 01		PC	2	COUPLING	
38	315233-0110		PC	2	Washer G1/4, 8660140000	
39	6-4722 6594 01		PC	4	Washer 14 x 20 x 1.5	
40	6-4722 6595 01		PC	2	Nipple 90 1/4”	
41	6-4722 6596 01		PC	2	Banjo screw 1/4”	
42	351486-0208		PC	1	Bushing, Int/Ext, G3/4-G1/4	
43	6-4723 1165 01		M	2	OIL HOSE PN20	
44	342991-0101		PC	2	Hose Clip,Worm Drive Type (11)-17	
45	6-4722 7182 01		PC	1	Nut M6M 30 x 2	
46	6-4722 7172 01		PC	1	LINK HEAD M400	
47	6-4722 7173 01		PC	1	Axial bearing	
48	6-4722 5381 01		PC	1	Rubber washer	
49	312318-0453		PC	1	Set screw, Cup end ISO4029 M8x25 A4	
50	6-4722 5611 01		PC	1	Washer 35 x 100	
51	6-4723 2434 01		PC	2	Spacer	

Pos	Part No	SP h	UN	Qty	Description	Page No

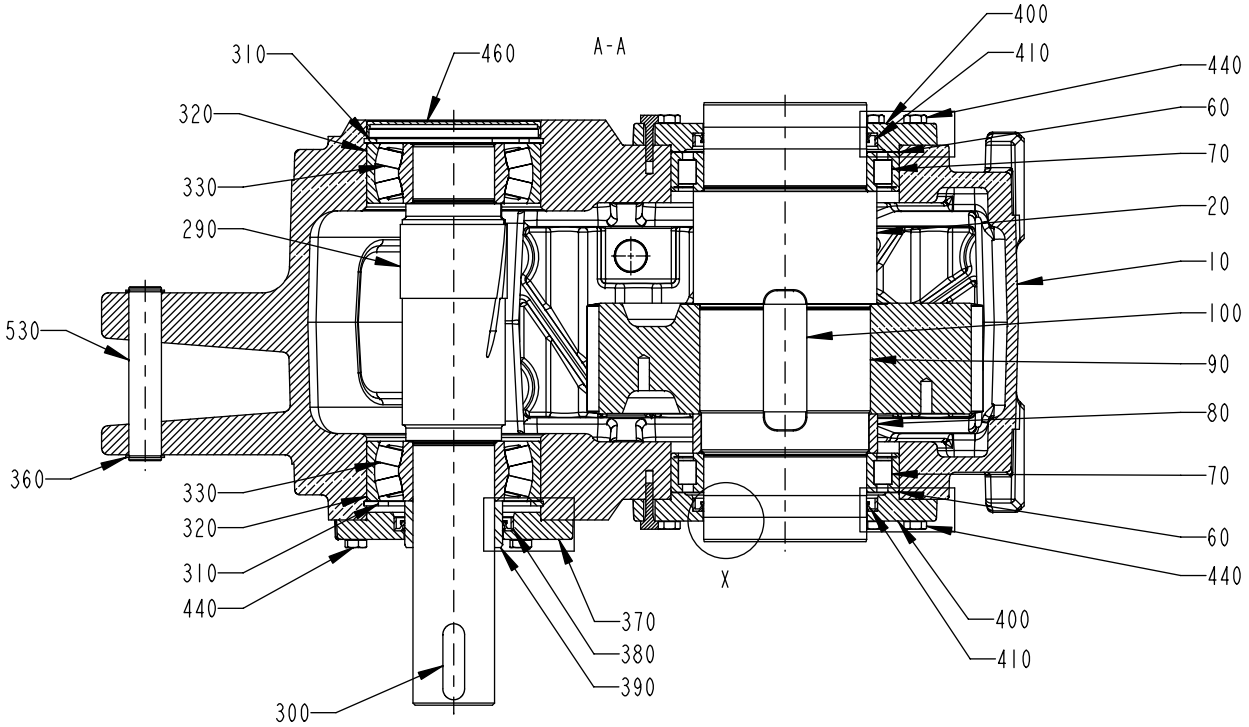

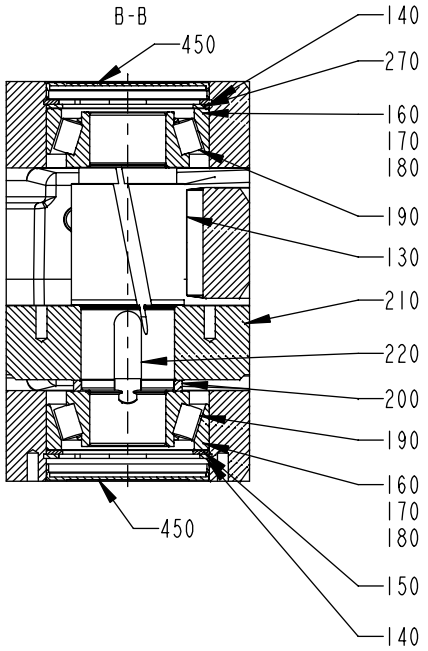

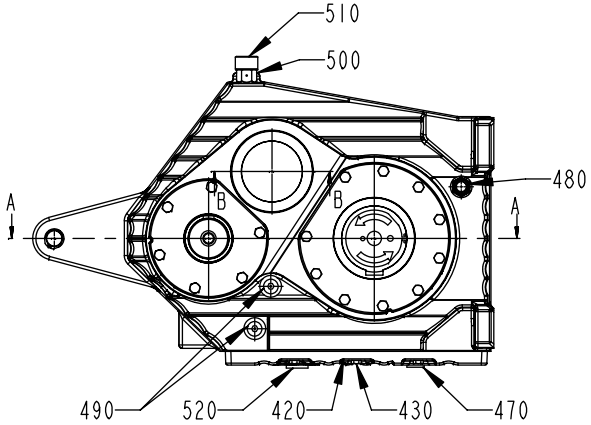

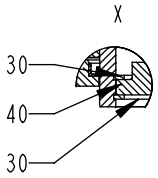

6-4723150800
763520

Pos	Part No	SP h	UN	Qty	Description	Page No
1	6-4723 1508 01		PC	1	GEARBOX M400	
4	311103-0460		PC	1	Parallel pin ISO 2338 10m6x35 A1	
5	6-4723 0844 01		PC	1	SCREW M24x60	
7	6-4722 7170 01		PC	1	Adjusting bolt M400	
12	6-4016 0011 50		PC	1	Washer 25 DIN 432	
13	312601-0330		PC	3	Hexagon Nut, DIN 934 M30 8 FZB	
35	90257-0001		PC	1	Filter Plug Art.No.8145-00-140 Type F14	
36	6-4722 6927 01		PC	1	Oil level glass	
37	6-4722 6940 01		PC	2	COUPLING	
38	315233-0110		PC	2	Washer G1/4, 8660140000	
39	6-4722 6594 01		PC	4	Washer 14 x 20 x 1.5	
40	6-4722 6595 01		PC	2	Nipple 90 1/4”	
41	6-4722 6596 01		PC	2	Banjo screw 1/4”	
42	351486-0208		PC	1	Bushing, Int/Ext, G3/4-G1/4	
43	6-4723 1165 01		M	2	OIL HOSE PN20	
44	342991-0101		PC	2	Hose Clip,Worm Drive Type (11)-17	
45	6-4722 7182 01		PC	1	Nut M6M 30 x 2	
46	6-4722 7172 01		PC	1	LINK HEAD M400	
47	6-4722 7173 01		PC	1	Axial bearing	
48	6-4722 5381 01		PC	1	Rubber washer	
49	312318-0453		PC	1	Set screw, Cup end ISO4029 M8x25 A4	
50	6-4722 5611 01		PC	1	Washer 35 x 100	
51	6-4723 2434 01		PC	2	Spacer	

Pos	Part No	SP h	UN	Qty	Description	Page No

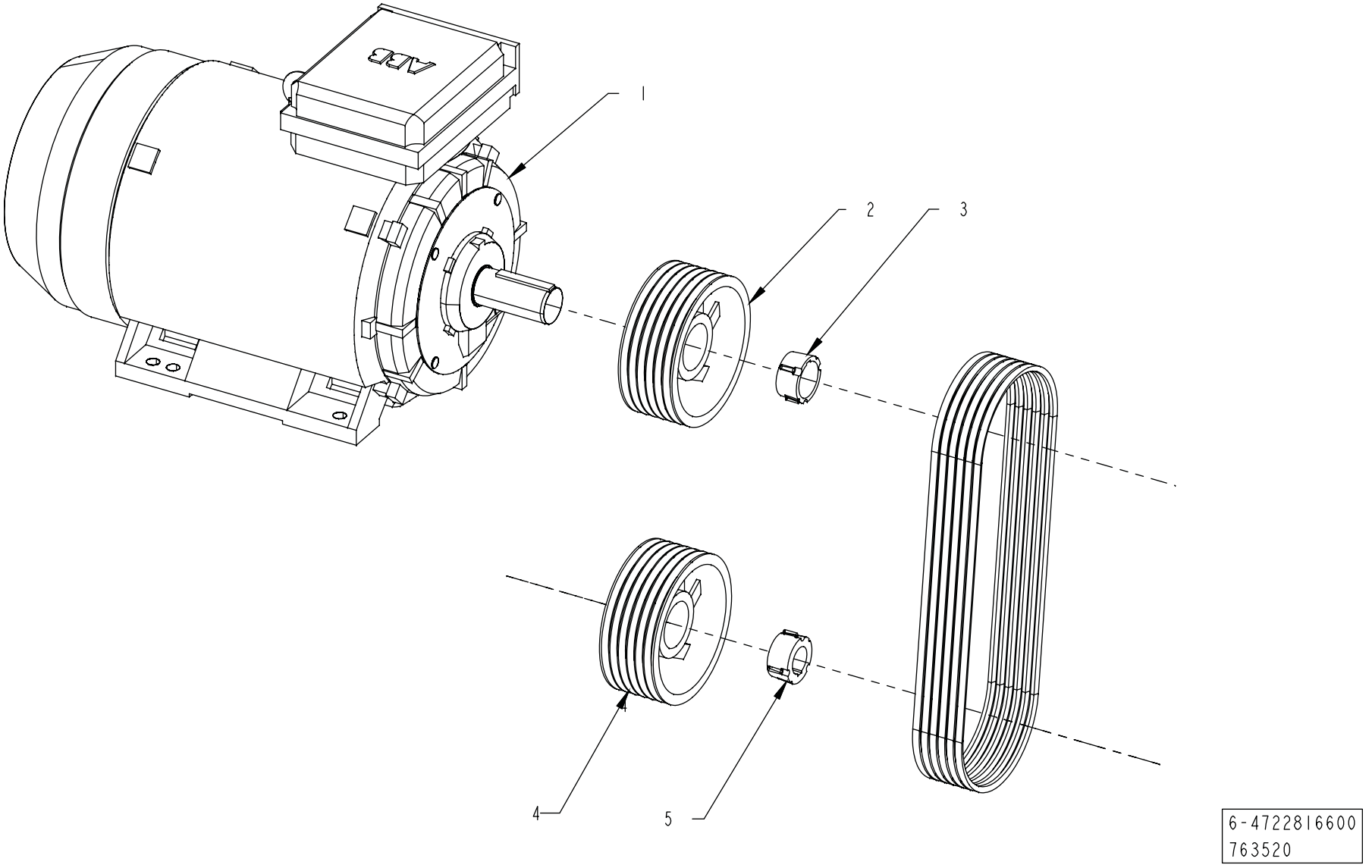
1
2
3
4
5
6-4722816600
763520

Pos	Part No	SP h	UN	Qty	Description	Page No
1	6-4722 6023 32		PC	1	Motor 200kW 400VD/50Hz 315L 4pol IE3	
2	6-4722 5915 03		PC	1	Pulley 5 SPC 300	
3	6-4722 5971 13		PC	1	Bushing 3525 ø80	
4	6-4722 5950 03		PC	1	Pulley 5 SPC 425	
5	6-4722 5971 12		PC	1	Bushing 3525 ø75	
6	6-4723 2123 06		PC	5	V-Belt XPC 2650	

Pos	Part No	SP h	UN	Qty	Description	Page No

Motor Lubrication

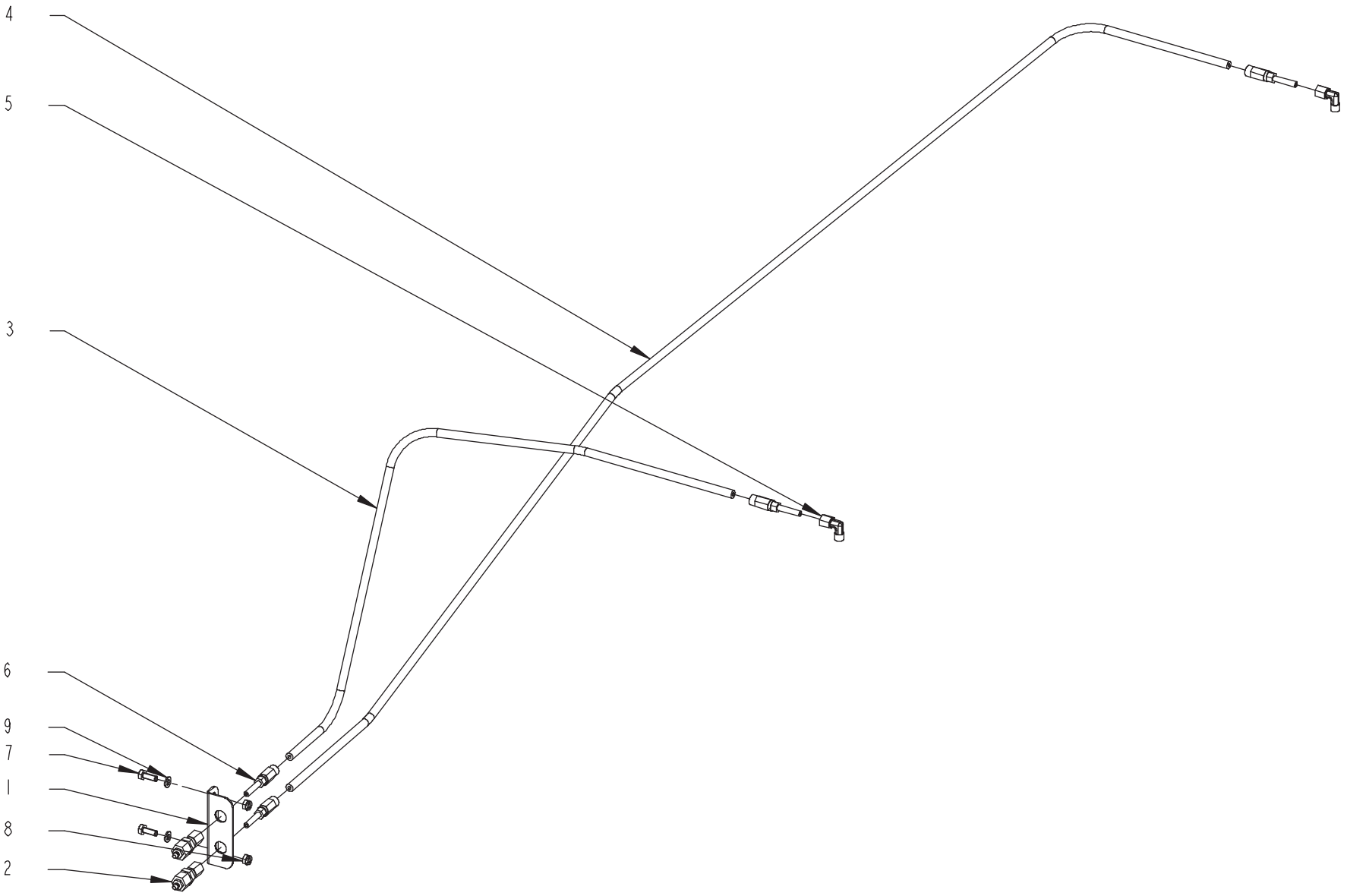

6-4723056000
531651

Pos	Part No	SP h	UN	Qty	Description	Page No
1	6-4723 0509 01		PC	1	Mounting plate	
2	6-4723 0510 01		PC	2	NIPPLE COUPLING 6mm	
3	6-4723 0511 01		PC	1	LUBRICATION HOSE	
4	6-4723 0512 01		PC	1	LUBRICATION HOSE	
5	6-4723 0514 01		PC	2	Elbow connection (M12x1 - 6mm)	
6	6-4723 0559 01		PC	4	LUBRICATION HOSE COUPLING	
7	312105-0368		PC	2	Screw, M6S ISO 4017 M6x16 A4 80	
8	312812-0316		PC	2	Hexagon nut, Ny-Lock M6 A4 80	
9	315105-0153		PC	2	Washer plain, 6,4x12x1,5 A4 BRB	

Pos	Part No	SP h	UN	Qty	Description	Page No

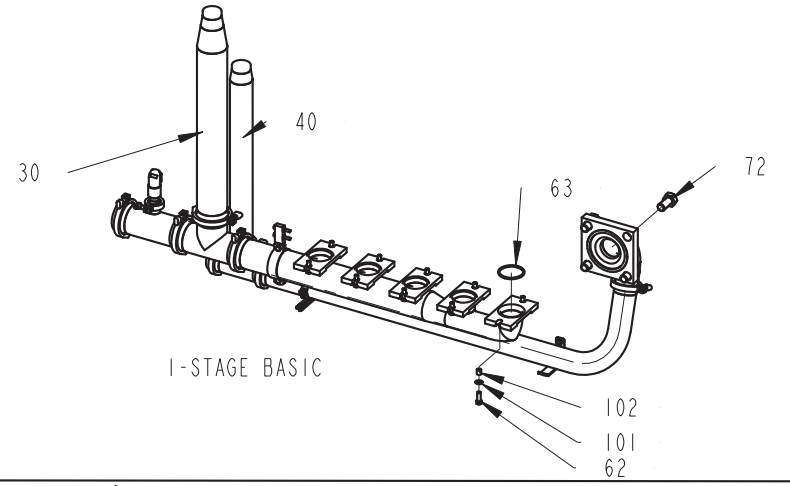

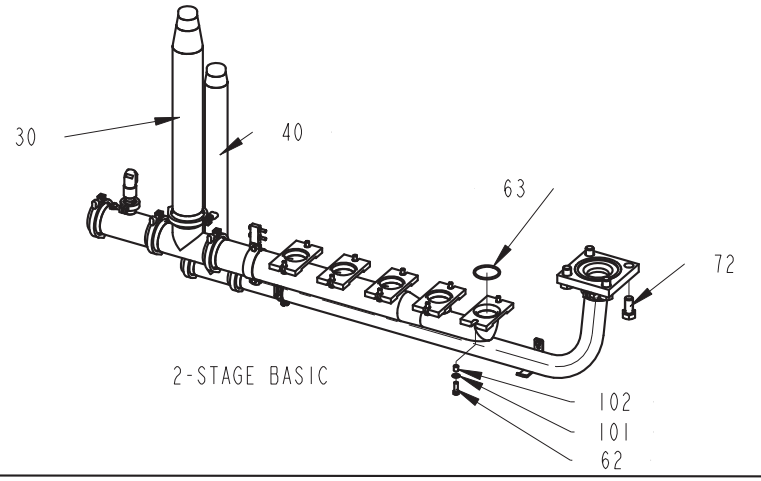

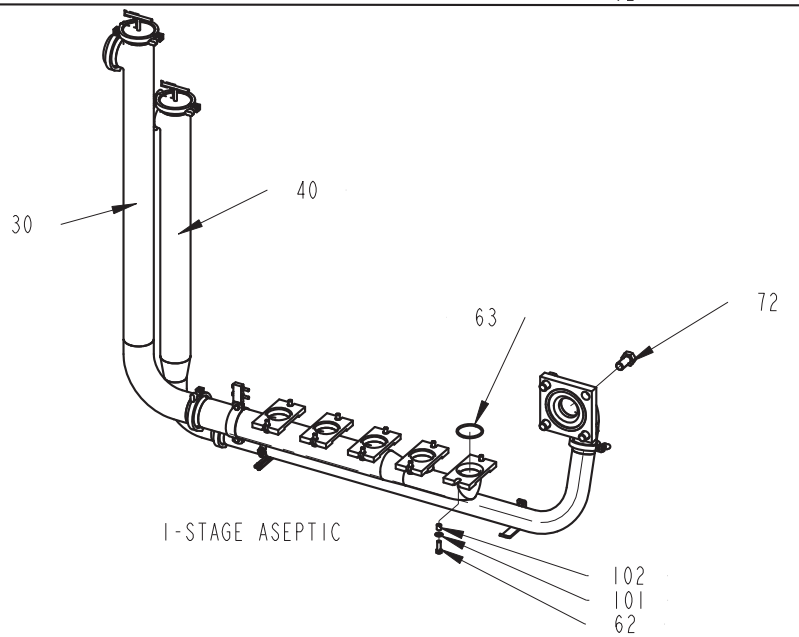

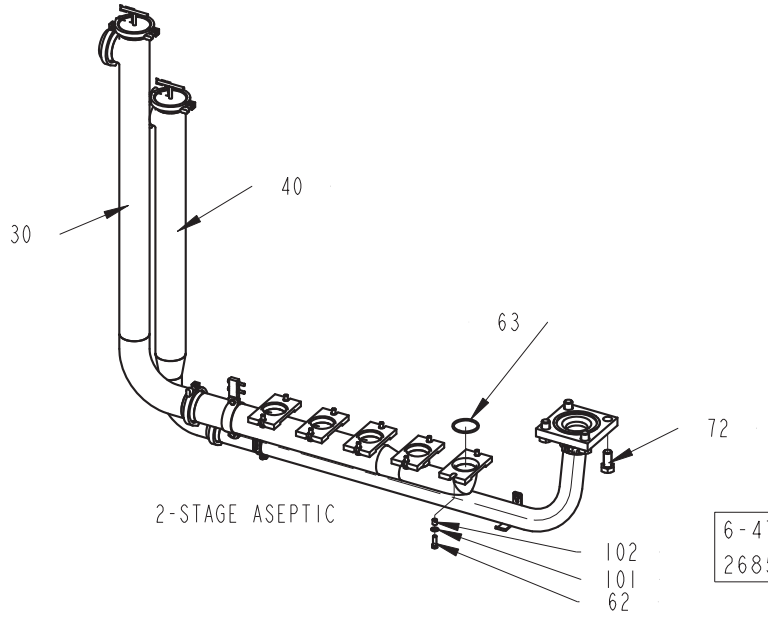

6-4722711100
268519

Pos	Part No	SP h	UN	Qty	Description	Page No
30	6-4722 8128 80		PC	1	Inlet M400	
40	6-4722 8129 80		PC	1	Outlet M400	
62	312105-0538		PC	10	Screw, M6S ISO 4017 M12x35 A4 80	
63	6-4723 1370 20		PC	5	O-ring 43.82x5.33 Foodgrade	
72	312105-0672		PC	4	Screw, M6S ISO 4017 M20x40 A4 80	
101	315105-0178		PC	10	Washer plain, 13x24x2,5 A4 BRB	
102	6-4722 7129 01		PC	10	Spacer tube	

Pos	Part No	SP h	UN	Qty	Description	Page No

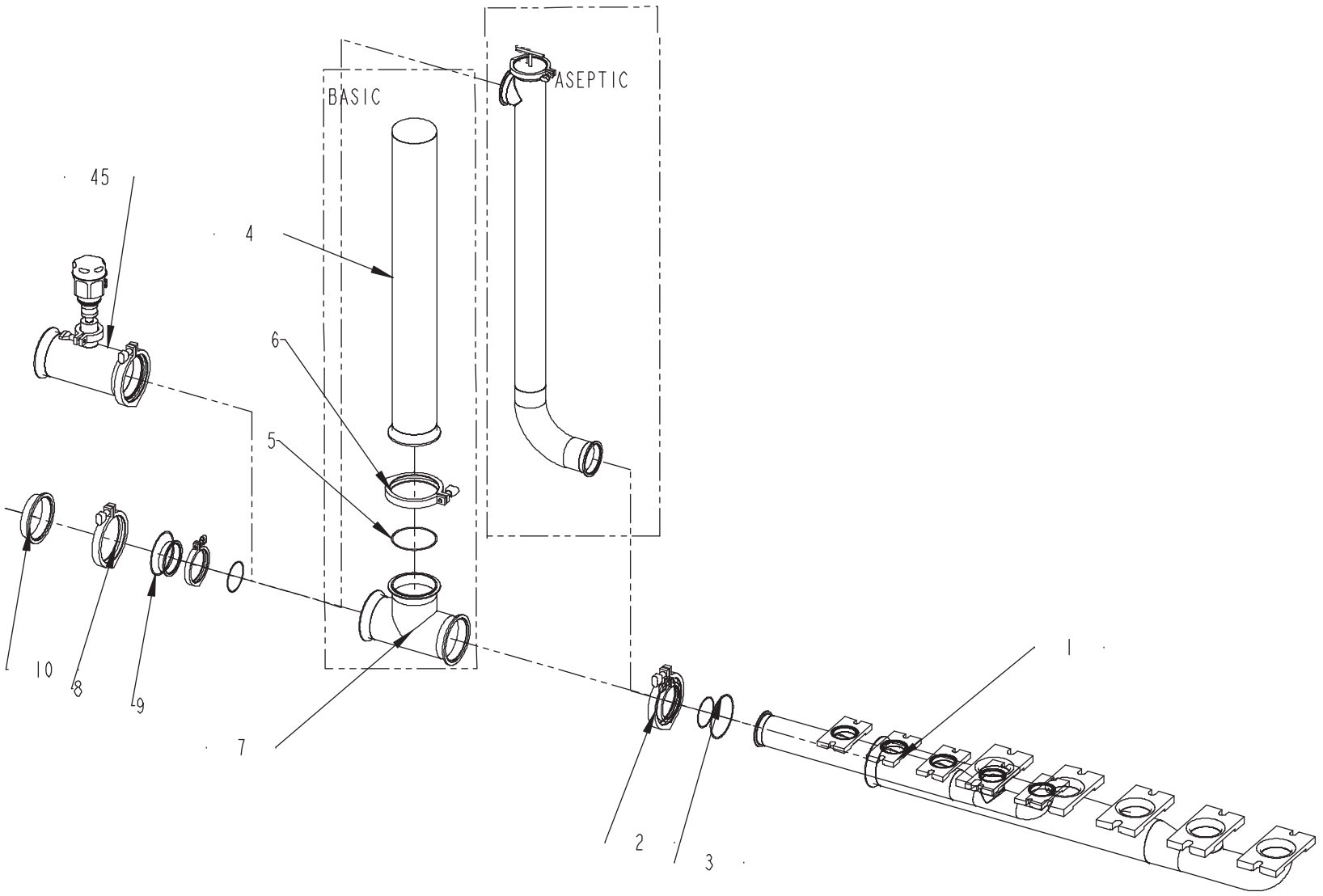

6-4722812800
661244

Pos	Part No	SP h	UN	Qty	Description	Page No
1	6-4722 9095 01		PC	1	Inlet flange Clamp 76.2, 315-400 bar	
2	6-2110 56		PC	1	Clamp single hinge A13MHM-3-S	
3	6-881 17115		PC	1	Seal ring H-Line H40-X-3 Silicone	
4	6-4722 6077 01		PC	1	Damper aseptic Clamp 76	
8	6-2110 56		PC	1	Clamp single hinge A13MHM-3-S	
9	6-881 17115		PC	1	Seal ring H-Line H40-X-3 Silicone	
10	6-9611 34 2053		PC	1	Ferrule 3A H-line-female 3” AISI316L	
29	315105-0165		PC	2	FWAS080G0-0S, Washer plain	
45	6-4722 9378 80		PC	1	Pressure transmitter	

Pos	Part No	SP h	UN	Qty	Description	Page No

Damper Aseptic 3”

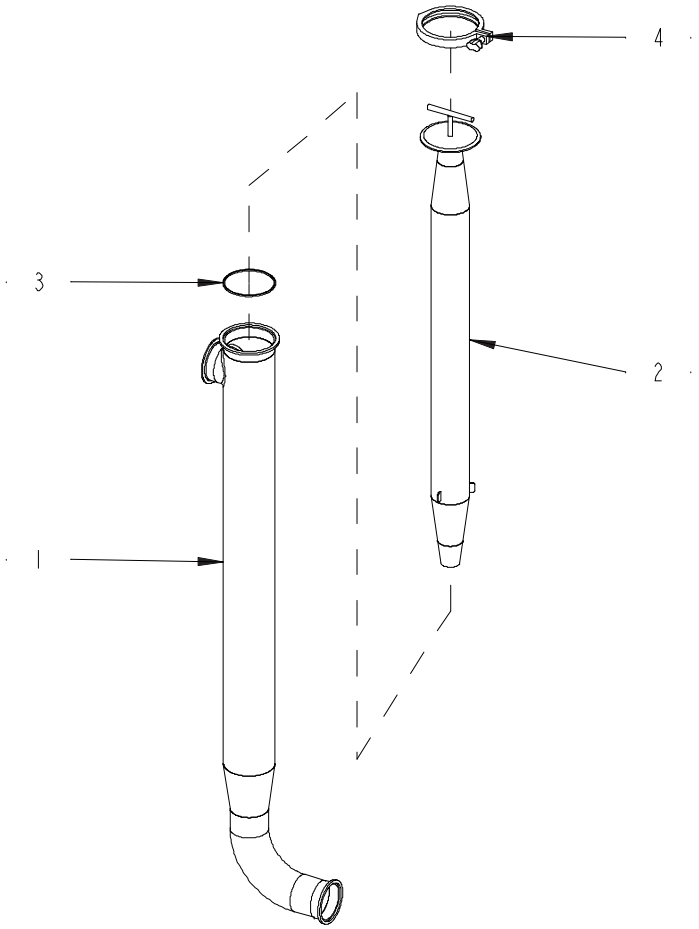

6-4722607700
376997

Pos	Part No	SP h	UN	Qty	Description	Page No
1	6-4722 8193 01		PC	1	Outer tube	
2	6-4722 8194 01		PC	1	Inner tube	
3	6-9635 11 7116		PC	1	Seal ring Tri-Clover H40-X-4	
4	6-2110 57		PC	1	Clamp single hinge A13MHM-4-S	

Pos	Part No	SP h	UN	Qty	Description	Page No

Pressure Transmitter

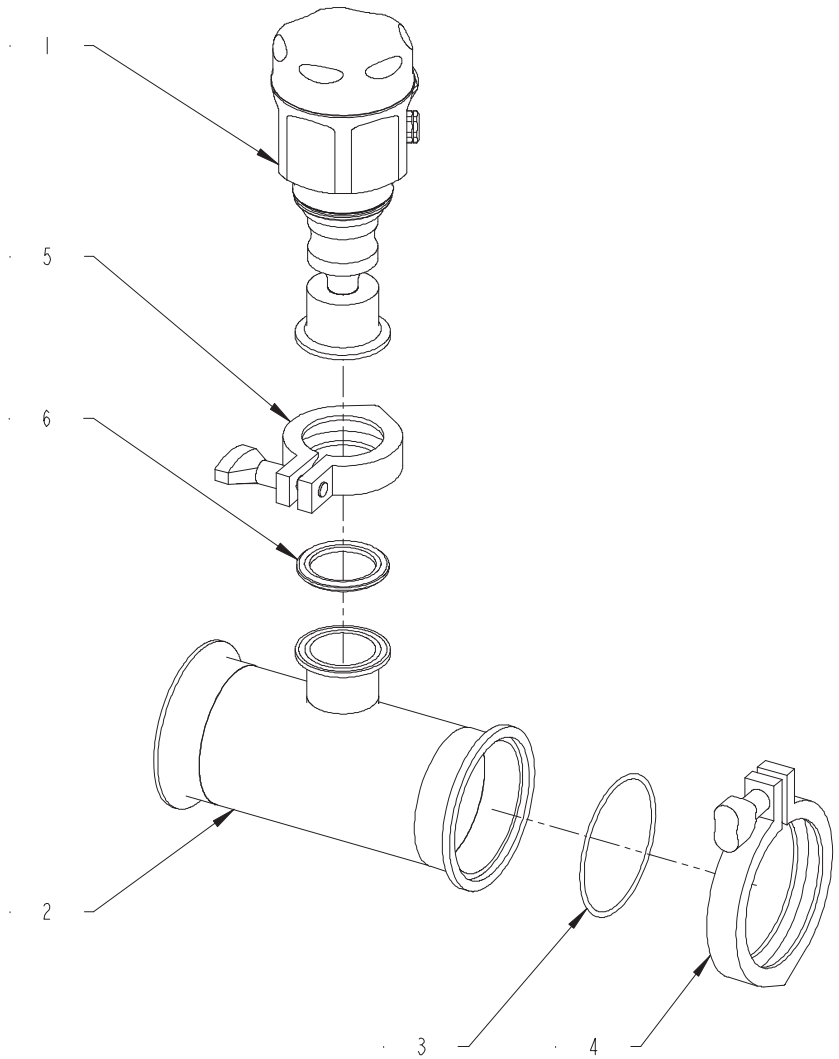

6-4722937800
584307

Pos	Part No	SP h	UN	Qty	Description	Page No
B847	90515-5442		PC	1	P.transm.PMP55 ISO2852 DN38 0-10bar(g)	
2	6-4722 9365 01		PC	1	Attachment pipe 76	
3	6-881 17115		PC	1	Seal ring H-Line H40-X-3 Silicone	
4	6-2110 56		PC	1	Clamp single hinge A13MHM-3-S	
5	6-2110 53		PC	1	Clamp Tri-Clover A13MHM-1 1/2” -S 304	
6	342850-0304		PC	1	Gasket 35,4x49,1x5,2 1”1/2 FDA, 3-A	

Pos	Part No	SP h	UN	Qty	Description	Page No

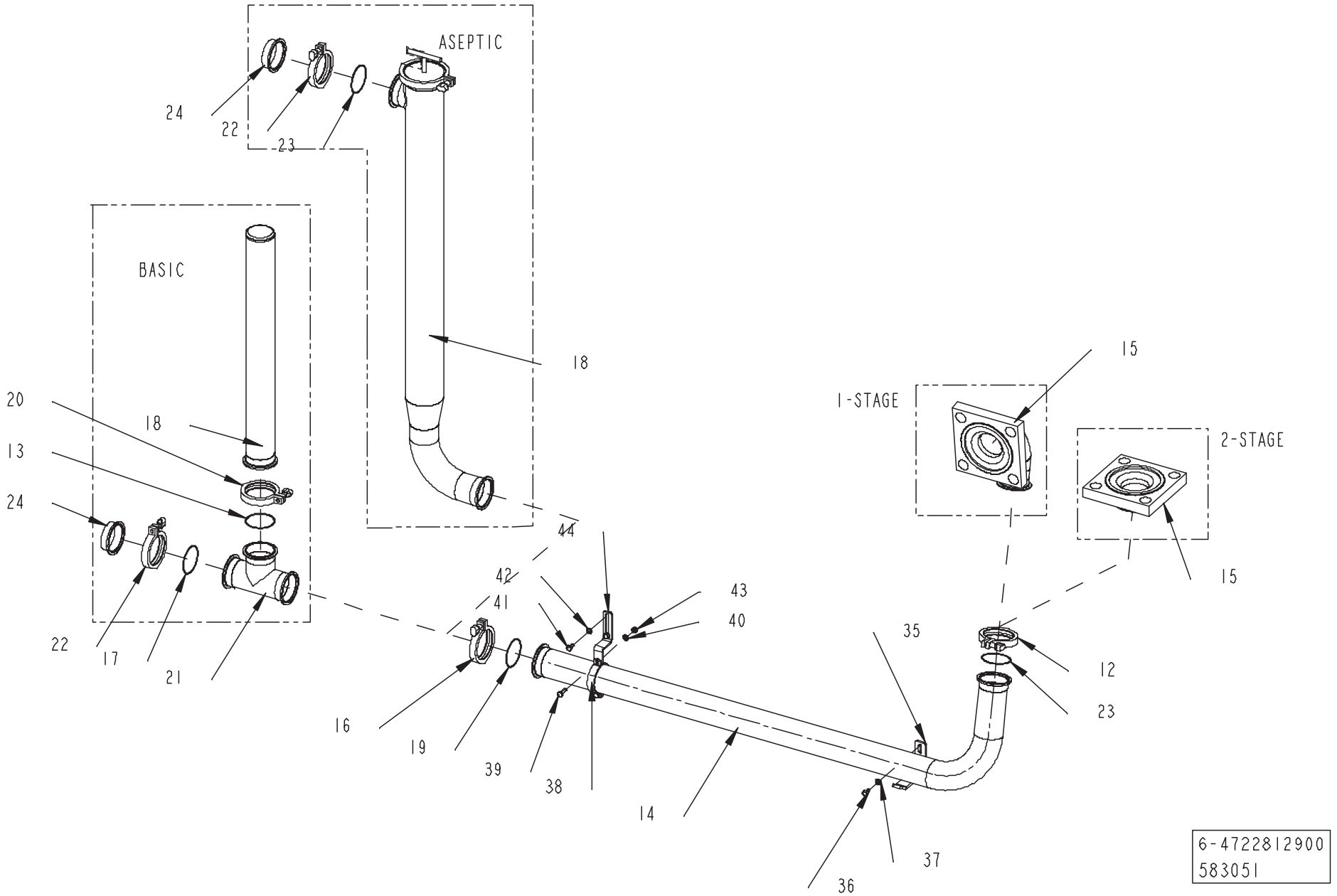
ASEPTIC
BASIC
1-STAGE
2-STAGE
24
22
23
18
20
13
17
21
44
42
41
43
40
16
19
39
38
14
35
12
36
37
6-4722812900
583051

Pos	Part No	SP h	UN	Qty	Description	Page No
12	6-2110 55		PC	1	Clamp single hinge A13MHM-2 1/2-S	
13	6-881 17114		PC	1	Seal ring H-Line H40-X-2 1/2 Silicone	
14	6-4722 7167 01		PC	1	Outlet pipe Clamp 63.5	
15	6-4722 7169 01		PC	1	Outlet flange Clamp 63.5 2-ST	
16	6-2110 55		PC	1	Clamp single hinge A13MHM-2 1/2-S	
17	6-881 17114		PC	1	Seal ring H-Line H40-X-2 1/2 Silicone	
18	6-4722 6078 01		PC	1	Damper Aseptic Clamp 63.5	
22	6-2110 55		PC	1	Clamp single hinge A13MHM-2 1/2-S	
23	6-881 17114		PC	1	Seal ring H-Line H40-X-2 1/2 Silicone	
24	6-9611 34 2052		PC	1	Ferrule 3A H-line-female 2.5” AISI316L	
35	6-4722 7165 01		PC	1	Support	
36	312812-0318		PC	2	Hexagon nut, Ny-Lock M8 A4 80	
37	315105-0165		PC	2	FWAS080G0-0S, Washer plain	
38	6-9612 48 3204		PC	1	Pipe hold.w/o weld.shaft 63.5 AISI304	
39	312105-0453		PC	2	Screw, M6S ISO 4017 M8x25 A4 80	
40	315105-0165		PC	2	FWAS080G0-0S, Washer plain	
41	312105-0449		PC	2	Screw, M6S ISO 4017 M8x16 A4 80	
42	315105-0165		PC	2	FWAS080G0-0S, Washer plain	
43	312812-0318		PC	4	Hexagon nut, Ny-Lock M8 A4 80	
44	6-4722 9265 01		PC	1	Pipe holder	

Pos	Part No	SP h	UN	Qty	Description	Page No

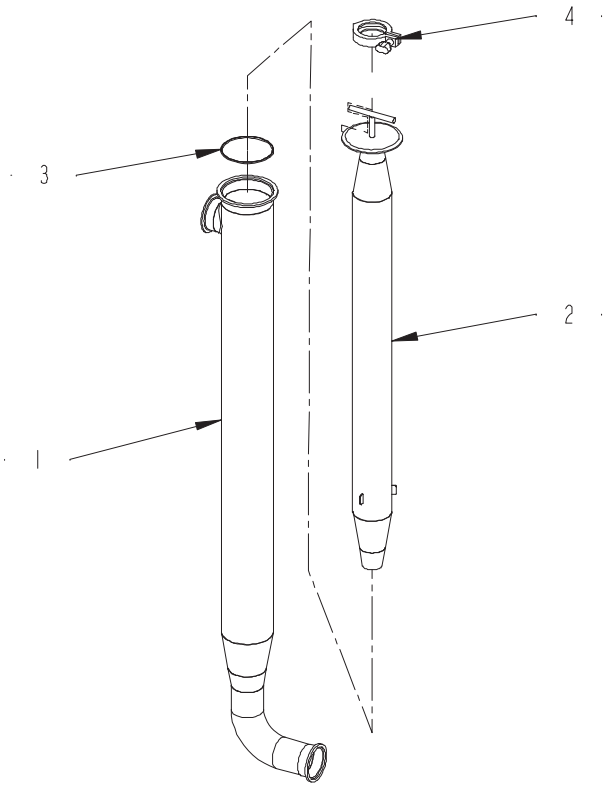

6-4722607800
314671

Pos	Part No	SP h	UN	Qty	Description	Page No
1	6-4722 8193 13		PC	1	Outer tube	
2	6-4722 8194 01		PC	1	Inner tube	
3	6-9635 11 7116		PC	1	Seal ring Tri-Clover H40-X-4	
4	6-2110 57		PC	1	Clamp single hinge A13MHM-4-S	

Pos	Part No	SP h	UN	Qty	Description	Page No

No Drawing

Pos	Part No	SP	h	UN	Qty	Description	Page No
1	6-4722 7353 80			PC	1	Common electric parts M350, M400	
2	6-4723 1583 80			PC	1	COMPLETE POWER BOX	
2	6-4723 1584 80			PC	1	COMPLETE CONTROL BOX	
2	6-4722 9033 80			PC	1	COMPLETE ALARM BOX	
3	6-4723 1428 80			PC	1	Cabling M400	

Pos	Part No	SP	h	UN	Qty	Description	Page No

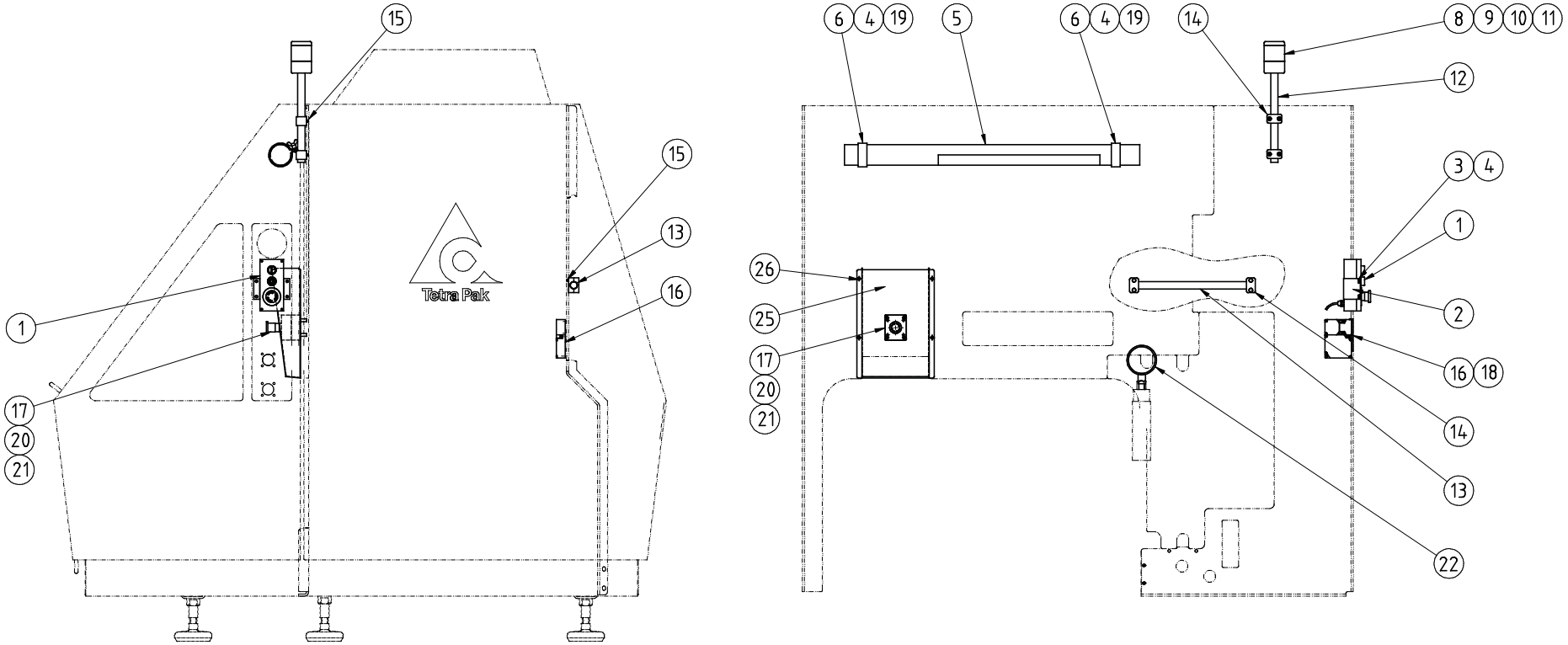
15
15
13
16
1
17
20
21
Tetra Pak
6
4
19
5
6
4
19
14
8
9
10
11
12
3
4
1
2
16
18
14
13
22
26
25
17
20
21

Pos	Part No	SP h	UN	Qty	Description	Page No
1	6-4722 9354 02		PC	1	MANOEUVRE BOX	
2	6-4722 9357 01		PC	1	Brace	
3	312812-0316		PC	4	Hexagon nut, Ny-Lock M6 A4 80	
4	315105-0153		PC	4	Washer plain, 6,4x12x1,5 A4 BRB	
5	90459-2679		PC	1	Light fixture, RL70V-118D/230V 50Hz	
6	90164-0303		PC	2	Light fixture, Bracket 70mm	
7	90602-4626		PC	1	Terminal Element, PSD-S CE-SM Spring	
8	90602-4062		PC	1	Light Element, Red, PSD-S OE LED RD	
12	6-4723 1430 01		PC	1	Lamp holder	
13	6-4722 7345 01		PC	1	Cable support	
14	90165-0116		PC	2	Pipe Clamp, d=21,3 mm, RAN321.3X	
14	90165-0048		PC	2	Pipe Clamp, d=25 mm, RAP325X	
15	312115-0376		PC	8	Screw ISO4762 M6x35 A4 80	
S806	90459-1130		PC	1	Emergency Stop, XALK178F	
18	312115-0327		PC	4	Screw ISO4762 M5x12 A4 80	
19	312105-0366		PC	4	Screw, M6S ISO 4017 M6x12 A4 80	
20	312115-0291		PC	2	Screw ISO4762 M4x12 A4 80	
24	90458-0373		PC	1	Key, for safety switch AZM-161-B1	
P805	6-4722 9355 01		PC	1	Hour Meter 24V DC	
41	6-4722 9356 01		PC	1	Gauge Anti Slip Ring	
60	90459-3352		PC	1	Flat Pin Socket, 6,3X0,8	
61	6-4723 0770 01		PC	1	Isolated Receptacles, red 6.3x0.8	
62	6-4723 0771 01		PC	2	Isolated Receptacles, red 4.8x0.8	
S808	90600-1056		PC	1	Safety switch, AZM 161 SK-12/12 RKA 024	
	6-4723 1844 80		PC	1	Motor Flange - Siemens	
	6-4722 7293 02		PC	4	Distance screw DSS M4070 M4 x 12	
	344375-0003		PC	1	Cable Shoe Ring, 0,5-1,5mm2 M4 Red	
	6-4722 8297 01		PC	1	Earth wire, L=150 mm 16 mm2	
	6-990475 10		PC	2	Lock washer 8,2x14x0,8	
	352113-0205		PC	3	Anchor plates for strips, TM2S8-C100	
	312125-0287		PC	3	Slotted head screw, ISO1207 M4x8 A4	
	6-4723 0195 01		PC	2	CABLE TAGS, BASIC	
	6-4723 0196 01		PC	2	CABLE TAGS, M350, M400 EXTRA	
	6-1995 106 510		PC	100	Stripes black TY 5232MX 200X2,4mm	
	6-1995 106 446		PC	100	Stripes black TY528MX 360X4,8mm	
	90512-8834		PC	4	Washer	
	315105-0165		PC	2	FWAS080G0-0S, Washer plain	
	312115-0372		PC	1	Screw ISO4762 M6x25 A4 80	
	312605-0318		PC	1	Hexagon Nut, M6M M8 A280	
	90458-0306		PC	1	Cable gland, M16x1,5, 5311 1010	
	312113-0323		PC	1	Screw, Serrated Combi Torx M5x8 A2	
	90458-1307		PC	1	Blind Plug Circular, M16x1,5 514GFK/216	
	312113-0287		PC	2	Screw, Serrated Combi Torx M4x8 A2	
	315105-0165		PC	5	FWAS080G0-0S, Washer plain	
	312105-0455		PC	1	Screw, M6S ISO 4017 M8x30 A4 80	
	312105-0449		PC	2	Screw, M6S ISO 4017 M8x16 A4 80	
	90512-8834		PC	1	Washer	
	90512-8834		PC	1	Washer	
	90522-2203		PC	1	Cable gland SKINDICHT KW-M 20x1.5 angled	
	353250-0020		PC	1	Gland lock nut, M20x1,5	
100	90515-0886		PC	1	Cable gland, Skintop Click M20, IP68	

No Drawing

Pos	Part No	SP	h	UN	Qty	Description	Page No
1	6-4723 1590 01			PC	1	Angle Flange Siemens L	
2	90458-0312			PC	2	Cable gland, M63x1,5, 5311 1070	
3	90517-9676			PC	2	Gland lock nut Brush Add-On, M63x1,5	
4	312105-0449			PC	4	Screw, M6S ISO 4017 M8x16 A4 80	

Pos	Part No	SP	h	UN	Qty	Description	Page No

No Drawing

Pos	Part No	SP	h	UN	Qty	Description	Page No
1	6-4723 1404 80			PC	1	Connection Box Power	
W02	6-4722 8938 29			PC	1	Wiring Motor - Hydraulic unit	

Pos	Part No	SP	h	UN	Qty	Description	Page No

Connection Box Power

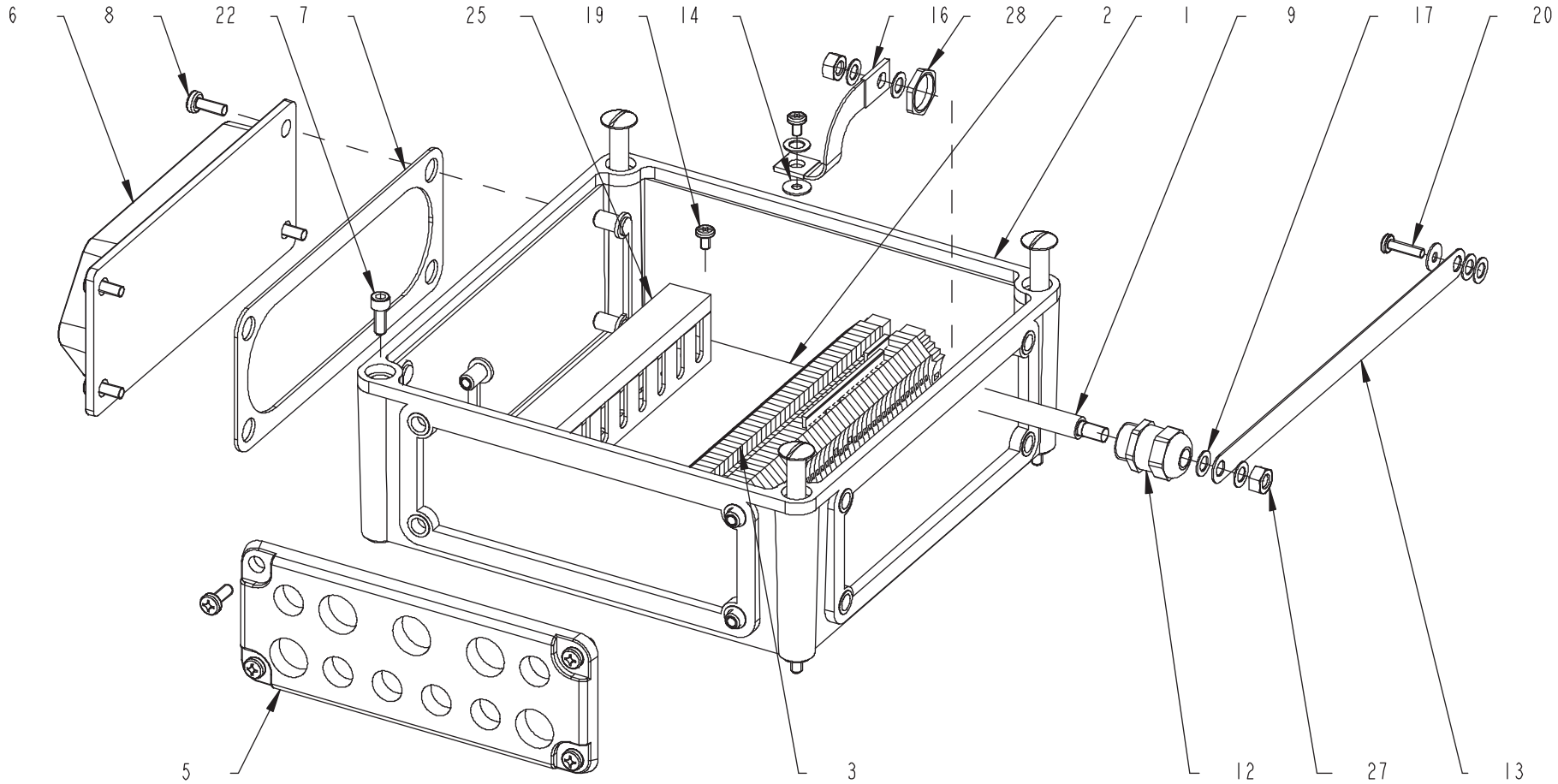

6-4723140400
645309

Pos	Part No	SP h	UN	Qty	Description	Page No
1	6-4722 5427 01		PC	1	Electric box 280 x 280	
2	6-4723 1586 01		PC	1	Mounting plate	
3	6-4723 2100 01		PC	1	TERMINAL BLOCK - POWER	
5	6-4723 0191 01		PC	1	Flange 5xM25+6xM20	
6	90503-4626		PC	1	Flange Plastic M20x16 FLRP211620	
7	6-4722 5430 01		PC	1	Gasket FL21	
8	6-4723 0547 01		PC	1	Locking Kit	
9	6-4722 6942 01		PC	1	Grounding screw	
10	6-4722 5528 01		PC	1	Lock screws	
12	90458-0307		PC	1	Cable gland, M20x1,5, 5311 1020	
13	90600-2904		PC	1	Earth Braid, 250/16/8,5	
14	90005-0114		PC	2	Washer Plain Round 5,3(M5)/15, H=1	
16	6-4722 8297 01		PC	1	Earth wire, L=150 mm 16 mm2	
17	6-990475 10		PC	7	Lock washer 8,2x14x0,8	
18	6-4722 5528 01		PC	1	Lock screws	
19	312113-0323		PC	5	Screw, Serrated Combi Torx M5x8 A2	
22	312115-0368		PC	4	Screw ISO4762 M6x16 A4 80	
25	6-4723 1407 01		MM	200	Cable duct, plastic, 25x60	
27	312605-0318		PC	6	Hexagon Nut, M6M M8 A280	
28	353250-0020		PC	1	Gland lock nut, M20x1,5	
W03	6-4722 8939 29		PC	1	Wiring 03, Motor - Pressure lubrication	
W05	6-4722 8941 41		PC	1	Wiring 05, Start - Stop	
W06	6-4722 8942 24		PC	1	Wiring 06, Emergency stop	
W08/096	6-4722 8944 16		PC	1	Wiring 08/09, Door guard	
W12	6-4722 8948 27		PC	1	Wiring 12, Light	
W14	6-4722 8950 26		PC	1	Wiring 14, Low oil pressure - Crankcase	
W15	6-4722 8951 23		PC	1	Wiring 15, Switch - High machine temp.	
W18	6-4722 9198 17		PC	1	Wiring 18, Thermistor	
W03	6-4722 8939 29		PC	1	Wiring 03, Motor - Pressure lubrication	
1	90458-0307		PC	2	Cable gland, M20x1,5, 5311 1020	
2	6-4723 1854 01		PC	1	REDUCING SLEEVE M32/M20	
3	351150-0413		M	3	Cable Olflex 4Gx1,5 mm2 light/grey	
4	344375-0003		PC	4	Cable Shoe Ring, 0,5-1,5mm2 M4 Red	
W05	6-4722 8941 41		PC	1	Wiring 05, Start - Stop	
1	90458-0307		PC	1	Cable gland, M20x1,5, 5311 1020	
2	90515-0886		PC	1	Cable gland, Skintop Click M20, IP68	
3	351150-0406		M	5	Cable Olflex 7x0,75 mm2 light/grey	
W06	6-4722 8942 24		PC	1	Wiring 06, Emergency stop	
1	90458-0307		PC	1	Cable gland, M20x1,5, 5311 1020	
2	90515-0886		PC	1	Cable gland, Skintop Click M20, IP68	
5	351150-0403		M	4	Cable Olflex 3x0,75 mm2 light/grey 35	
W08/096	6-4722 8944 16		PC	1	Wiring 08/09, Door guard	
1	90458-1155		PC	1	Enlarging Sleeve, 5210 4452	
2	90458-0307		PC	2	Cable gland, M20x1,5, 5311 1020	
3	351150-0405		M	2,7	Cable Olflex 5x0,75 mm2 light/grey	
W12	6-4722 8948 27		PC	1	Wiring 12, Light	
2	90458-0307		PC	1	Cable gland, M20x1,5, 5311 1020	
4	351150-0403		M	4	Cable Olflex 3x0,75 mm2 light/grey 35	
W14	6-4722 8950 26		PC	1	Wiring 14, Low oil pressure - Crankcase	
1	90458-0307		PC	1	Cable gland, M20x1,5, 5311 1020	
2	351150-0403		M	4	Cable Olflex 3x0,75 mm2 light/grey 35	
W15	6-4722 8951 23		PC	1	Wiring 15, Switch - High machine temp.	
1	90458-0307		PC	2	Cable gland, M20x1,5, 5311 1020	
3	351150-0403		M	4,5	Cable Olflex 3x0,75 mm2 light/grey 35	
W18	6-4722 9198 17		PC	1	Wiring 18, Thermistor	
1	90458-0306		PC	1	Cable gland, M16x1,5, 5311 1010	
2	6-4722 9203 01		PC	1	Reducing sleeve M20/M16	
4	351150-0403		M	2	Cable Olflex 3x0,75 mm2 light/grey 35	
5	90458-0307		PC	1	Cable gland, M20x1,5, 5311 1020	
W02	6-4722 8938 29		PC	1	Wiring Motor - Hydraulic unit	
1	90458-0307		PC	2	Cable gland, M20x1,5, 5311 1020	
2	6-4722 9204 01		PC	1	REDUCING SLEEVE M25/M20	
3	351150-0413		M	2,4	Cable Olflex 4Gx1,5 mm2 light/grey	
4	344375-0003		PC	4	Cable Shoe Ring, 0,5-1,5mm2 M4 Red	

No Drawing

Pos	Part No	SP	h	UN	Qty	Description	Page No
1	6-4723 1410 80			PC	1	Connection Box Control	
W11	6-4722 8946 26			PC	1	Wiring 10/11, Valve-cooling water/steam	
W24	6-4722 8954 38			PC	1	Wiring 24/25, Servo valve	
W25	6-4722 8954 38			PC	1	Wiring 24/25, Servo valve	
W27	6-4722 8956 56			PC	1	Wiring 27, Product pressure	
W272	6-4722 8956 56			PC	1	Wiring 27, Product pressure	
W30	6-4722 8958 35			PC	1	Wiring 30/31, Steam temperature	
W31	6-4722 8958 35			PC	1	Wiring 30/31, Steam temperature	
W46	6-4722 9200 26			PC	1	Wiring 46, Flow Pressure guard	
W47	6-4722 9201 56			PC	1	Wiring 47, Inlet pressure	
W55	6-4722 8947 70			PC	1	Wiring 55, Alarm lamp	

Pos	Part No	SP	h	UN	Qty	Description	Page No

Connection Box Control

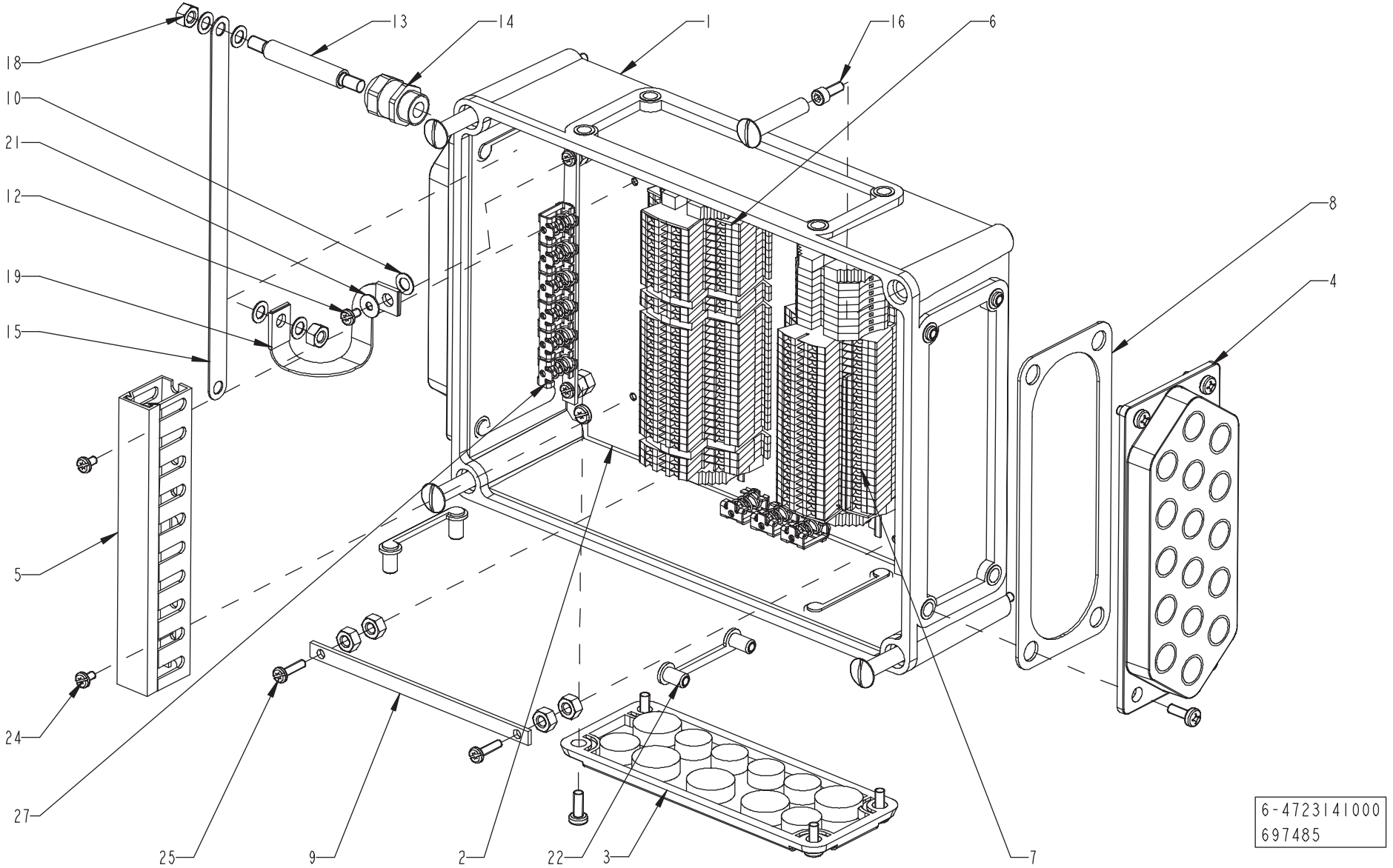

Pos	Part No	SP h	UN	Qty	Description	Page No
1	6-4722 6949 01		PC	1	Connection box 280 x 380	
2	6-4723 1436 01		PC	1	Mounting plate	
3	6-4723 0191 01		PC	1	Flange 5xM25+6xM20	
4	90503-4626		PC	2	Flange Plastic M20x16 FLRP211620	
5	6-4723 1407 01		MM	400	Cable duct, plastic, 25x60	
6	6-4723 2102 01		PC	1	TERMINAL BLOCK - SIGNAL	
7	6-4722 8014 01		PC	1	TERMINAL BLOCK SIGNAL 2	
8	6-4722 5430 01		PC	2	Gasket FL21	
9	6-4723 1597 01		PC	2	RAIL	
10	6-990475 10		PC	5	Lock washer 8,2x14x0,8	
13	6-4722 6942 01		PC	1	Grounding screw	
14	90458-0307		PC	1	Cable gland, M20x1,5, 5311 1020	
15	90600-2904		PC	1	Earth Braid, 250/16/8,5	
16	312115-0368		PC	4	Screw ISO4762 M6x16 A4 80	
18	312605-0318		PC	2	Hexagon Nut, M6M M8 A280	
19	6-4722 8297 01		PC	1	Earth wire, L=150 mm 16 mm2	
21	90005-0114		PC	1	Washer Plain Round 5,3(M5)/15, H=1	
22	6-4723 0547 01		PC	2	Locking Kit	
23	6-4722 5528 01		PC	1	Lock screws	
25	312113-0323		PC	4	Screw, Serrated Combi Torx M5x8 A2	
27	6-31801 5252 1		PC	9	Shield connection terminals KLBu 3-8	
28	90521-6837		PC	4	Distance bolt M5, L=30mm, SW8	
29	6-990475 08		PC	4	Lock washer 5,3x10x0,6 A4	
W35	6-4722 8959 40		PC	1	Wiring 35, Oil level guard	
W37	6-4722 8960 38		PC	1	Wiring 37/38, Clogged filter CC/GB	
W35	6-4722 8959 40		PC	1	Wiring 35, Oil level guard	
1	90458-0306		PC	1	Cable gland, M16x1,5, 5311 1010	
2	6-4722 9203 01		PC	1	Reducing sleeve M20/M16	
3	353001-0113		PC	3	End Sleeve 0,75Mm2	
W37	6-4722 8960 38		PC	1	Wiring 37/38, Clogged filter CC/GB	
1	90458-0307		PC	2	Cable gland, M20x1,5, 5311 1020	
2	351150-0403		M	4	Cable Olflex 3x0,75 mm2 light/grey 35	
W55	6-4722 8947 38		PC	1	Wiring 55, Alarm lamp	
1	90458-0307		PC	1	Cable gland, M20x1,5, 5311 1020	
3	351150-0403		M	4	Cable Olflex 3x0,75 mm2 light/grey 35	
W11	6-4722 8946 26		PC	1	Wiring 10/11, Valve-cooling water/steam	
1	90458-0307		PC	1	Cable gland, M20x1,5, 5311 1020	
2	351150-0403		M	3	Cable Olflex 3x0,75 mm2 light/grey 35	

Pos	Part No	SP h	UN	Qty	Description	Page No
W24	6-4722 8954 38		PC	1	Wiring 24/25, Servo valve	
1	90458-0307		PC	1	Cable gland, M20x1,5, 5311 1020	
2	90603-4384		PC	1	Sensor cable, SAC-5P- 5,0-PUR/M12FS SH	
3	353001-0113		PC	5	End Sleeve 0,75Mm2	
W25	6-4722 8954 38		PC	1	Wiring 24/25, Servo valve	
1	90458-0307		PC	1	Cable gland, M20x1,5, 5311 1020	
2	90603-4384		PC	1	Sensor cable, SAC-5P- 5,0-PUR/M12FS SH	
3	353001-0113		PC	5	End Sleeve 0,75Mm2	
W27	6-4722 8956 56		PC	1	Wiring 27, Product pressure	
1	90458-0307		PC	2	Cable gland, M20x1,5, 5311 1020	
2	351422-0002		M	6	Cable Olflex 150CY Quattro 3x0,75	
W272	6-4722 8956 56		PC	1	Wiring 27, Product pressure	
1	90458-0307		PC	2	Cable gland, M20x1,5, 5311 1020	
2	351422-0002		M	6	Cable Olflex 150CY Quattro 3x0,75	
W30	6-4722 8958 35		PC	1	Wiring 30/31, Steam temperature	
1	90458-0307		PC	1	Cable gland, M20x1,5, 5311 1020	
2	353001-0113		PC	2	End Sleeve 0,75Mm2	
3	344254-0050		PC	1	Sensor cable, EVT004	
W31	6-4722 8958 35		PC	1	Wiring 30/31, Steam temperature	
1	90458-0307		PC	1	Cable gland, M20x1,5, 5311 1020	
2	353001-0113		PC	2	End Sleeve 0,75Mm2	
3	344254-0050		PC	1	Sensor cable, EVT004	
W46	6-4722 9200 26		PC	1	Wiring 46, Flow Pressure guard	
1	90458-0307		PC	1	Cable gland, M20x1,5, 5311 1020	
2	351150-0403		M	3,7	Cable Olflex 3x0,75 mm2 light/grey 35	
W47	6-4722 9201 56		PC	1	Wiring 47, Inlet pressure	
1	90458-0307		PC	1	Cable gland, M20x1,5, 5311 1020	
2	351422-0002		M	7	Cable Olflex 150CY Quattro 3x0,75	
W55	6-4722 8947 70		PC	1	Wiring 55, Alarm lamp	
1	90458-0307		PC	1	Cable gland, M20x1,5, 5311 1020	
3	351150-0403		M	7	Cable Olflex 3x0,75 mm2 light/grey 35	

Complete Alarm Box

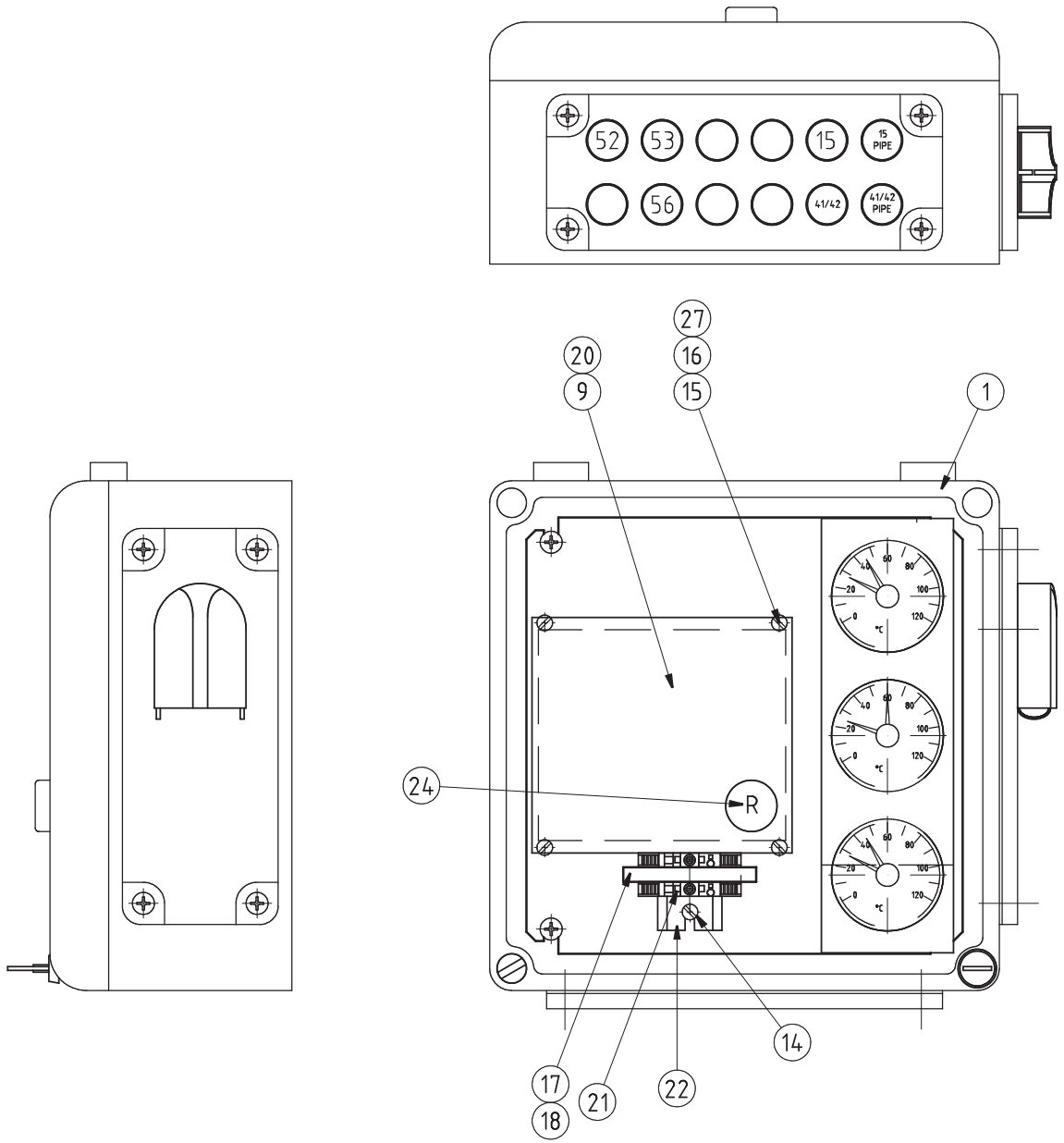

Pos	Part No	SP h	UN	Qty	Description	Page No
1	6-4722 9009 80		PC	1	Connection box ALARM PANEL	

Pos	Part No	SP h	UN	Qty	Description	Page No

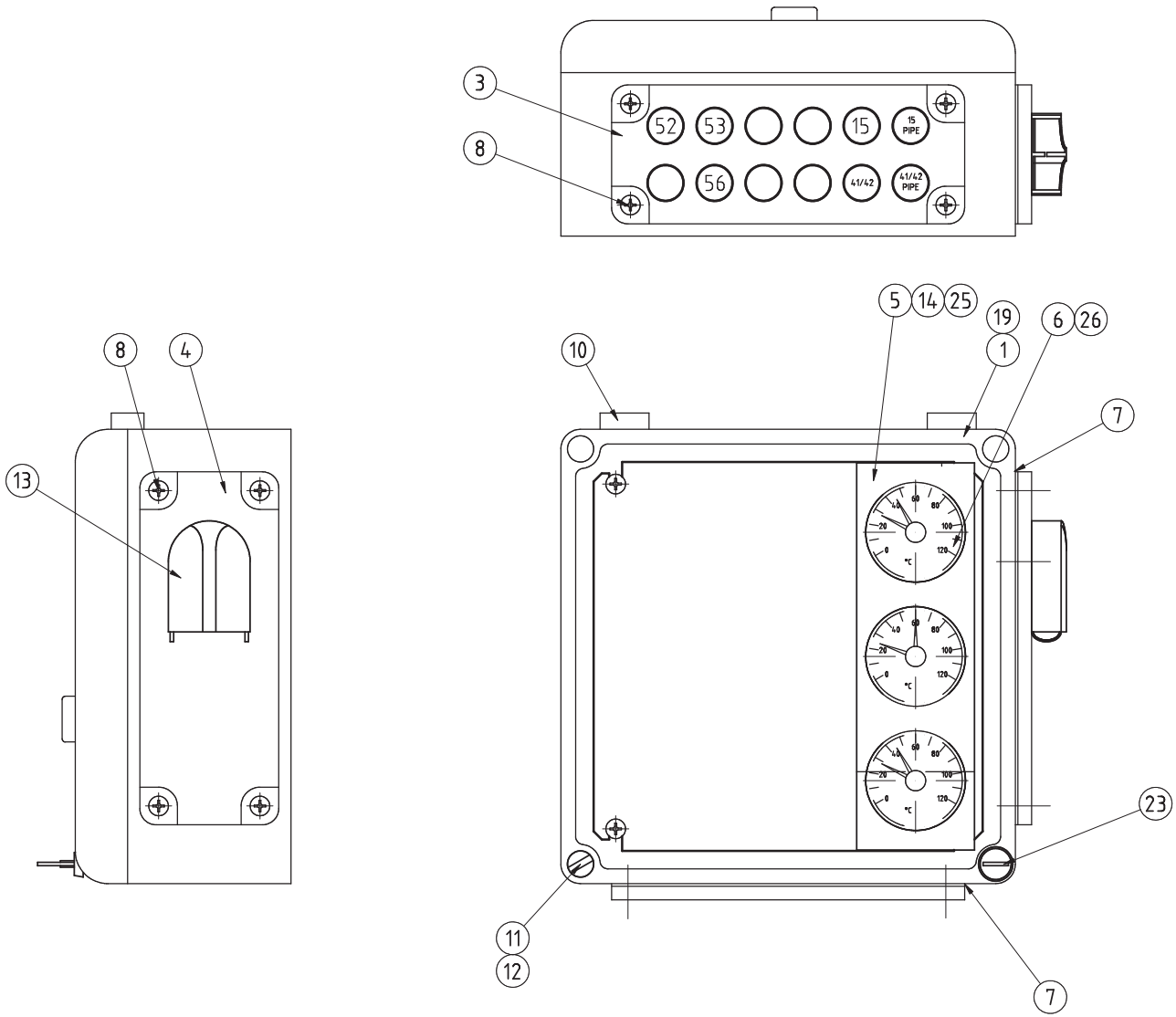
3
8
52
53
15
15 PIPE
56
41/42
41/42 PIPE
8
4
13
5
14
25
19
6
26
10
1
7
23
11
12
7

Pos	Part No	SP h	UN	Qty	Description	Page No
W41	6-4722 8962 26		PC	1	Wiring 41/42, Oil temp crankcase/Gearbox	
1	6-4722 5427 01		PC	1	Electric box 280 x 280	
2	6-4722 7362 01		PC	1	Sheet	
3	6-4723 0190 01		PC	1	Flange FL21 12xM20	
4	6-4722 7357 01		PC	1	Flange	
5	6-4722 7449 01		PC	1	Fastening plate	
6	6-4722 7282 02		PC	3	Temperature guard	
7	6-4722 5430 01		PC	2	Gasket FL21	
8	6-4722 5528 01		PC	2	Lock screws	
13	6-4722 7429 01		PC	1	VENTILATING DEVICE	
14	312113-0323		PC	4	Screw, Serrated Combi Torx M5x8 A2	
19	312115-0368		PC	4	Screw ISO4762 M6x16 A4 80	
25	6-4722 8813 01		PC	1	Decal	
41	6-4723 0504 02		M	3,2	Flexible conduits 12, FP	
15	6-4723 0504 02		M	3,2	Flexible conduits 12, FP	
32	6-4723 0451 01		PC	2	Plastic Fitting , M20-12 conduits	
	90459-3352		PC	6	Flat Pin Socket, 6,3X0,8	
W41	6-4722 8962 26		PC	1	Wiring 41/42, Oil temp crankcase/Gearbox	
1	90458-0307		PC	2	Cable gland, M20x1,5, 5311 1020	
2	351150-0405		M	4	Cable Olflex 5x0,75 mm2 light/grey	

Pos	Part No	SP h	UN	Qty	Description	Page No

Cabling M400

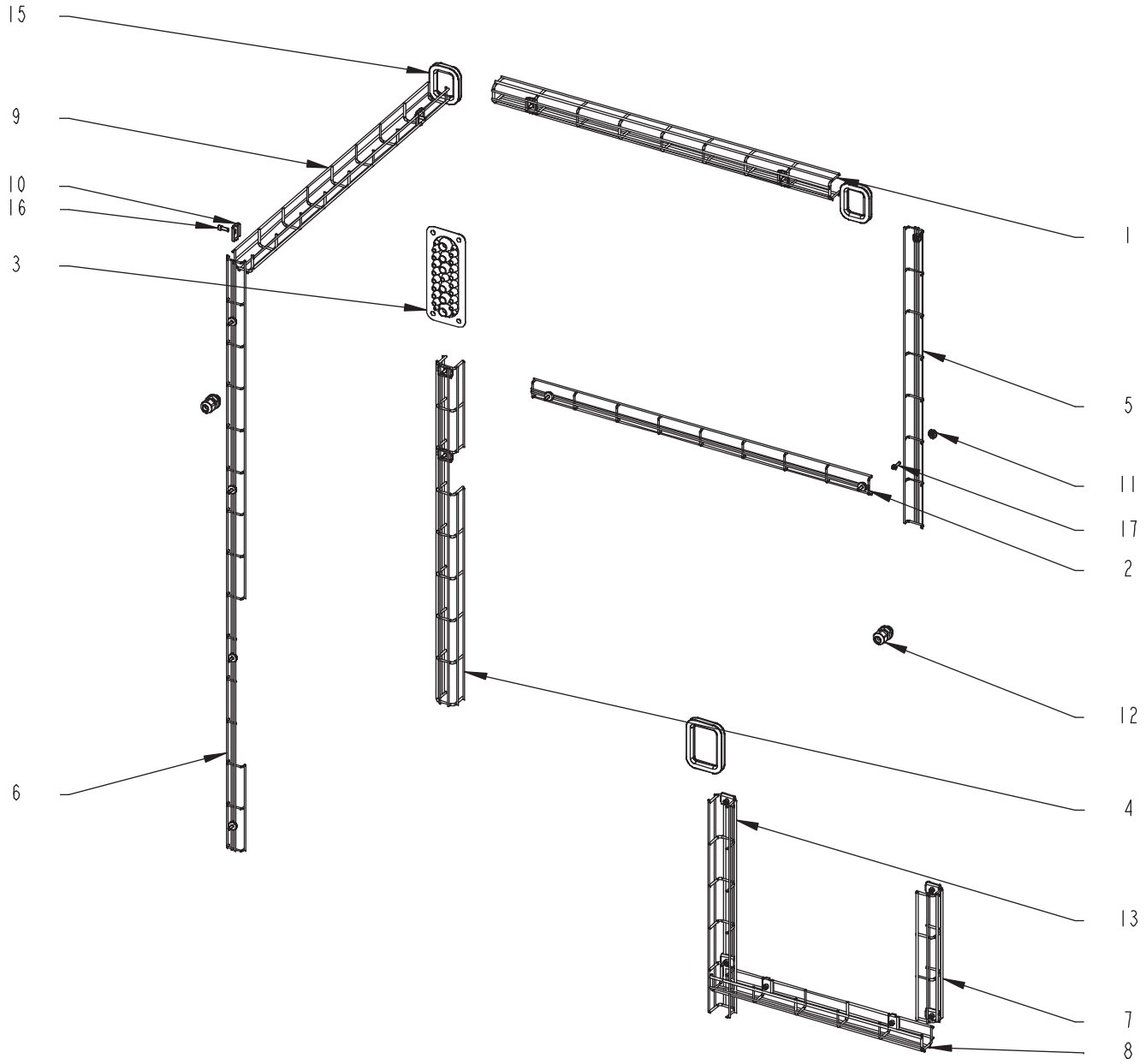

6-4723142800
649566

Pos	Part No	SP h	UN	Qty	Description	Page No
1	6-4723 1416 01		PC	1	Cable Trench 53/45, 8M	
2	6-4723 1419 01		PC	1	Cable Trench 46/15, 8M	
3	6-4723 1432 01		PC	1	Flange MC 25/27 FL21	
4	6-4723 1424 01		PC	1	Cable Trench 53/45, 8M	
5	6-4723 1420 01		PC	1	Cable Trench 46/15, 7M	
6	6-4723 1422 01		PC	1	Cable Trench 46/15, 13M	
7	6-4723 1425 01		PC	1	Cable Trench 53/45, 3M	
8	6-4723 1417 01		PC	1	Cable Trench 53/45, 5M	
9	6-4723 1777 01		PC	1	Cable Trench 53/45, 8M	
10	90181-0183		PC	12	Cable Duct, Fitting, SB-102-S	
11	6-4723 1426 01		PC	8	Mounting Spacer B22, Plastic	
12	90515-0886		PC	2	Cable gland, Skintop Click M20, IP68	
13	6-4723 1417 01		PC	1	Cable Trench 53/45, 5M	
15	6-4722 7231 01		MM	700	Rubber moulding EMKA 1010-06	
16	312105-0370		PC	12	Screw, M6S ISO 4017 M6x20 A4 80	
17	312113-0331		PC	8	Screw, Serrated Combi Torx M5x20 A2	

Pos	Part No	SP h	UN	Qty	Description	Page No

No Drawing

Pos	Part No	SP	h	UN	Qty	Description	Page No
9	6-4722 5686 03			PC	1	SIGN CLEANING OF PIPE SYSTEM ENG/FRE	
10	6-4722 5696 03			PC	1	SIGN CHECK WATER IN OIL ENG/FRE	
22	6-4723 2003 01			PC	1	Machine Sign CE	
23	6-4723 2431 01			PC	1	Labeling Kit - Pos. nr	
24	6-4723 0604 01			PC	1	Safety Label - Forklift	
25	6-4723 1274 01			PC	1	Ground Symbol	
26	6-4723 1266 01			PC	1	Label - Oil Level	

Pos	Part No	SP	h	UN	Qty	Description	Page No

Intentionally left blank

Pos	Part No	SP h	UN	Qty	Description	Page No
	6-4722 6660 80		**PC**	**1**	**COMMISSIONING KIT**	
1	6-4722 7115 80		PC	1	COMMISSIONING KIT M400	
2	6-4722 7569 01		L	110	Oil mineral 220 cSt	
3	90458-0863		L	29	Oil mineral 320 cSt	
4	6-4723 0952 01		L	6	Hydraulic Food Grade Oil H1, 68 cst	
8	6-4722 5642 04		PC	5	Shim 0.1	
8	6-4722 5642 05		PC	5	Shim 0.2	
8	6-4722 5642 06		PC	5	Shim 0.3	
	6-4722 7115 80		**PC**	**1**	**COMMISSIONING KIT M400**	
	6-4722 7116 80		PC	1	Tools	
	6-4723 0921 91		PC	5	Comm. kit Piston cartridge M400	
	6-4722 8161 91		PC	5	COMM. KIT VALVE CARTRIDGE ø65 MUSHROOM	
	6-4722 7402 89		PC	1	COMM. KIT Homogenizing head	
	6-4722 8763 91		PC	1	COMM. KIT FLANGE MANOMETER	
	6-4722 7111 91		PC	1	COMM. KIT PRODUCT CONNECTIONS M400	
	6-4723 0921 91		**PC**	**5**	**COMM. KIT PISTON CARTRIDGE M400**	
11	6-4723 0647 01		PC	5	Piston seal 56 PSU1	
12	6-4722 0931 04		PC	5	Piston seal 56 PSB1	
14	6-4722 1418 07		PC	10	Guide band 56x9.5	
18	6-4723 1370 17		PC	5	O-ring 104.37x3.53 Foodgrade	
	6-4722 8161 91		**PC**	**5**	**COMM. KIT VALVE CARTRIDGE Ø110 MUSHROOM**	
27	6-4722 0942 02		PC	25	Valve sealing 55 x 65 x 8	
58	6-4722 1178 18		PC	25	Support ring 65	
	6-4722 7402 89		**PC**	**1**	**COMM. KIT HOMOGENIZING HEAD**	
6	6-4722 6562 46		PC	2	O-ring 97.79 x 5.33	
9	6-4723 1370 35		PC	2	O-ring 16.3x2.4 Foodgrade	
13	6-4723 1370 10		PC	2	O-ring 47.22x3.53 Foodgrade	
21	6-4723 1370 06		PC	2	O-ring 32.92x3.53 Foodgrade	
22	6-4723 1370 15		PC	5	O-ring 69.44x3.53 Foodgrade	
24	6-4722 7151 02		PC	2	Support ring axial 3.53 x 40.2	
27	6-4723 1370 08		PC	2	O-ring 40.87x3.53 Foodgrade	
28	6-4722 7152 03		PC	3	Support ring radial 3.53 x 79.8	
43	6-4723 1370 10		PC	1	O-ring 47.22x3.53 Foodgrade	
	6-4722 8763 91		**PC**	**1**	**COMM. KIT FLANGE MANOMETER**	
52	6-4723 1370 52		PC	1	O-ring 23.39x3.53 Foodgrade	
53	6-4722 8753 01		PC	1	Back-up Ring	

Pos	Part No	SP h	UN	Qty	Description	Page No
	6-4722 7111 91		**PC**	**1**	**COMM. KIT PRODUCT CONNECTIONS**	
63	6-4723 1370 20		PC	5	O-ring 43.82x5.33 Foodgrade	

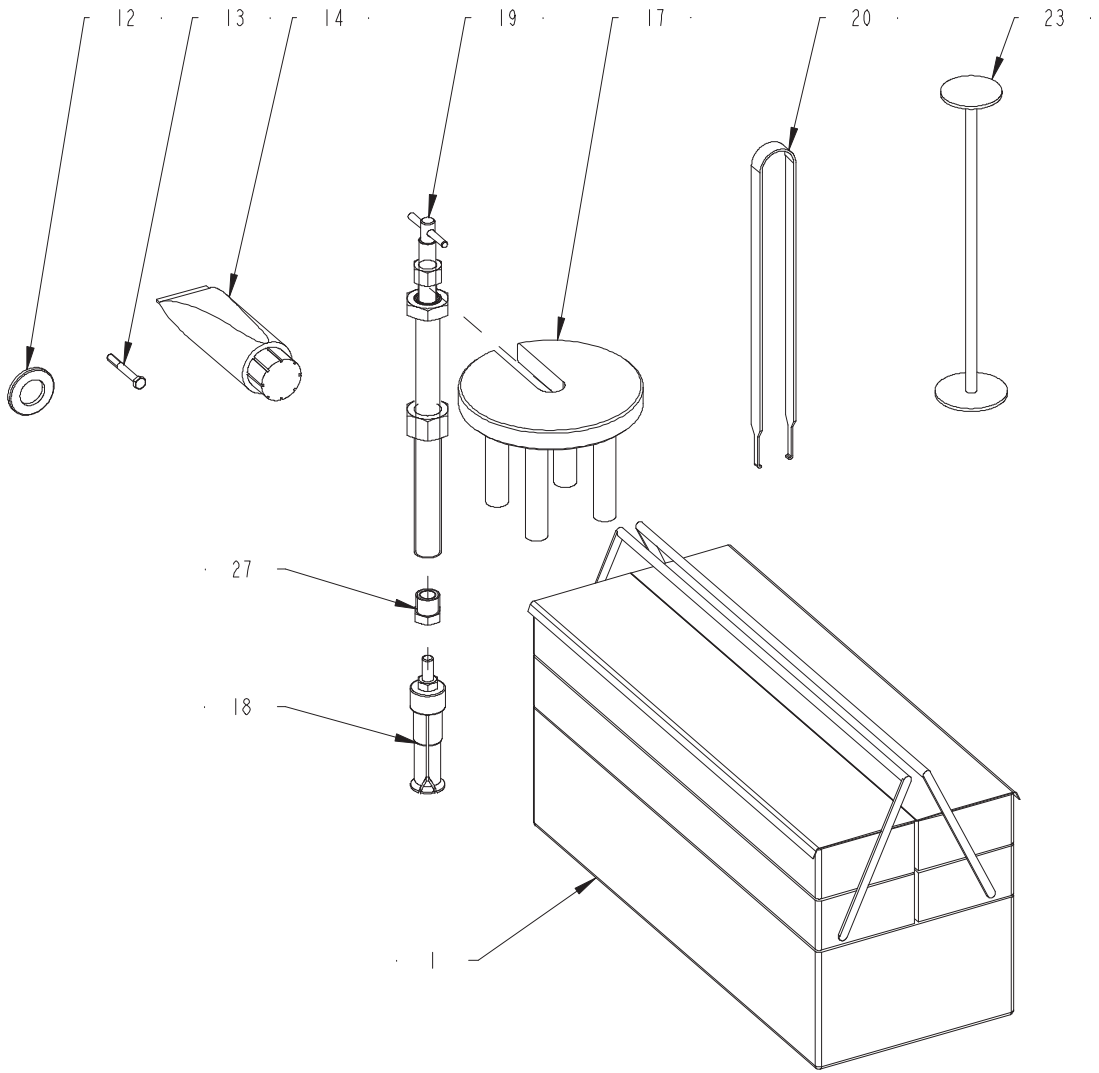

6-4722711600
625588

Pos	Part No	SP h	UN	Qty	Description	Page No
1	6-4722 8025 83		PC	1	Standard tools M30, M300, M350, M400	
12	315102-0198		PC	1	Washer Plain, BRFB 25/45 H=4	
13	312101-0380		PC	2	Screw M6S M6x50 fzb	
14	344417-0213		PC	1	Klüberpaste UH1 84-201, 60g Tube	
14	6-1995 109 012		PC	1	Unisilcone L250L	
17	6-4722 6800 01		PC	1	Extractor plate 162	
18	6-4690 0260 00		PC	1	Puller 21/5 30-37	
19	6-4722 6803 81		PC	1	Extractor extension	
20	6-4722 8026 01		PC	1	Tongs	
23	6-4722 8038 02		PC	1	VALVE MOUNTING TOOL 110/65	

Pos	Part No	SP h	UN	Qty	Description	Page No

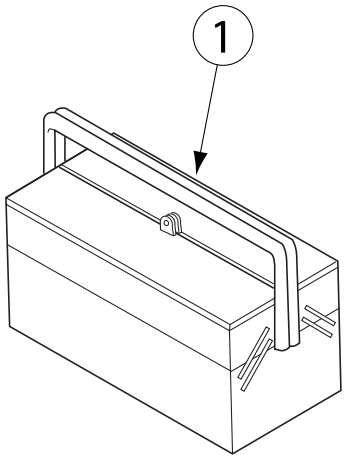

-80

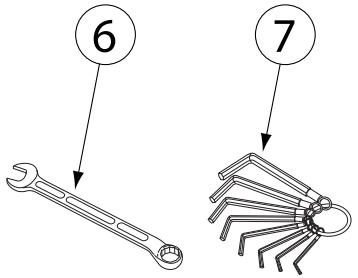

-81

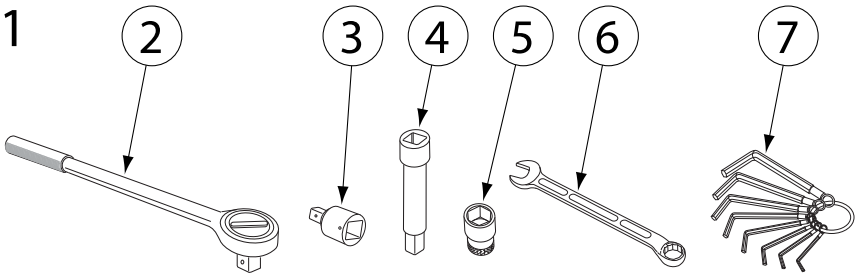

-82

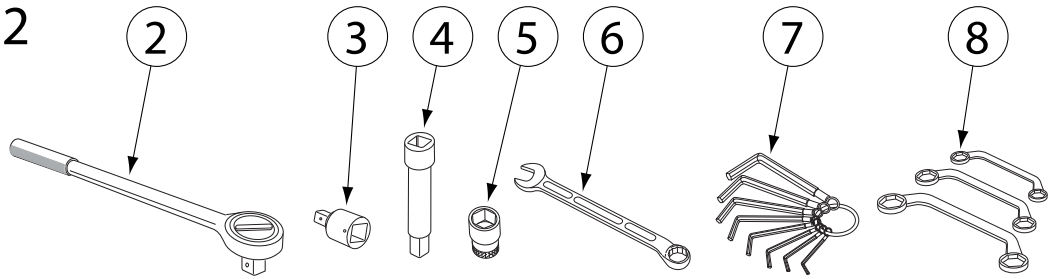

-83

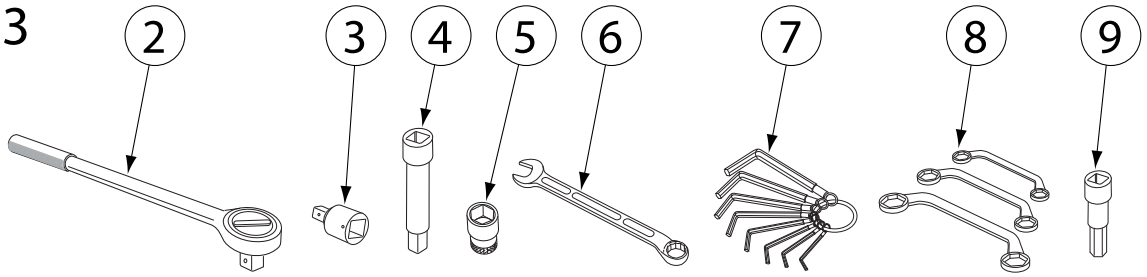

4722-8025

Pos	Part No	SP h	UN	Qty	Description	Page No
1	6-4722 8024 01		PC	1	Tool box	
2	6-4722 8021 01		PC	1	Catch handle 3/4”	
3	6-4722 8022 01		PC	1	Reducing adapter 3/4” -1/2”	
4	6-4722 8023 01		PC	1	Extension 125 x 1/2”	
5	6-4722 8016 19		PC	1	Hexagon socket 19 x 1/2”	
5	6-4722 8016 24		PC	1	Hexagon socket 24 x 1/2”	
5	6-4722 8016 27		PC	1	Hexagon socket 27 x 1/2”	
5	6-4722 8016 32		PC	1	Hexagon socket 32 x 1/2”	
5	6-4722 8016 36		PC	1	Hexagon socket 36 x 3/4”	
5	6-4722 8016 41		PC	1	Hexagon socket 41 x 3/4”	
6	6-4722 8017 07		PC	1	Box wrench 7	
6	6-4722 8017 19		PC	1	Box wrench 19	
6	6-4722 8017 22		PC	1	Box wrench 22	
6	6-4722 8017 46		PC	1	Box wrench 46	
7	6-4722 8018 01		PC	1	Allen key set	
8	6-4722 8020 01		PC	1	Offset end wrench set	
9	6-4722 8019 17		PC	1	Allen key socket 17	

Pos	Part No	SP h	UN	Qty	Description	Page No

4 Preventive Maintenance Recommendations

4.1 TPMS 4-3

4.1.1 TPMS - Description 4-3

4.1.2 Preventive Maintenance Recommendations - Description 4-3

4.1.3 Checklist 4-5

4.1 TPMS

4.1.1 TPMS - Description

The maintenance system used for equipment from Tetra Pak is called the **Tetra Pak Maintenance System (TPMS)**. If you are using TPMS, the checklists will be delivered directly from your local Tetra Pak service station.

The TPMS checklists are designed to match and keep pace with the ongoing development of new and existing equipment from Tetra Pak, and to meet the demands set by our customers for even higher efficiency and better economy.

If you require further information regarding TPMS, please do not hesitate to contact your local Tetra Pak office.

4.1.2 Preventive Maintenance Recommendations - Description

This section of the TeM covers all the preventive maintenance activities for the specified machine, accompanied with the relevant spare parts.

If you have any questions regarding the maintenance of your Tetra Pak Homogenizer, please do not hesitate to contact your local Tetra Pak office.

Important information

The recommendations related to wear and tear parts are given general average figures for the Tetra Pak Homogenizer product portfolio. The data relates typically to white milk, homogenized at equal or less than 250 bar at 80% of the maximum crankshaft speed of the machine. The machine should be installed according to the installation instructions.

Please note, that for example abrasive products, higher crankshaft speed or increased pressure as well as unresolved dry matter or air in the product will reduce the life time of the parts in contact with the product. In the same way will optimum conditions increase the indicated life time of these parts.

The initially given data should be seen as starting point for the tool. Adjustments based on experience from the actual products will give correct intervals for each machine over time.

(Cont'd)

(Cont'd)

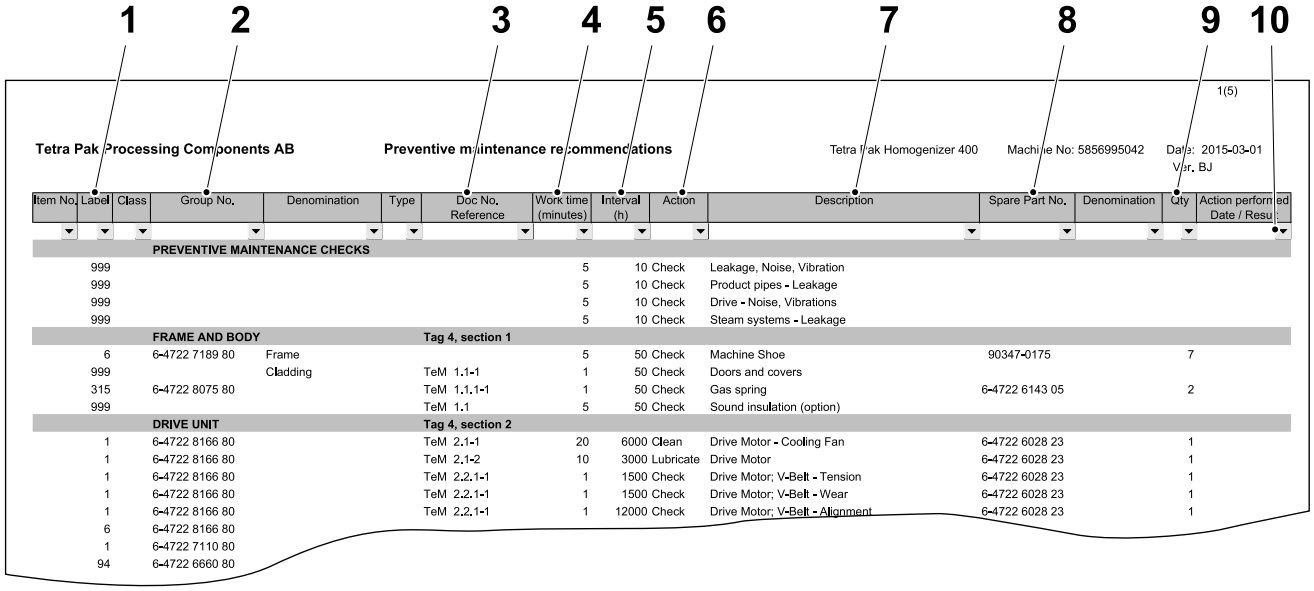

1(5)

Tetra Pak Processing Components AB **Preventive maintenance recommendations** Tetra Pak Homogenizer 400 Machine No: 5856995042 Date: 2015-03-01 Var. BJ

Item No.	Label	Class	Group No.	Denomination	Type	Doc No. Reference	Work time (minutes)	Interval (h)	Action	Description	Spare Part No.	Denomination	Qty	Action performed Date / Result
			PREVENTIVE MAINTENANCE CHECKS											
999							5	10	Check	Leakage, Noise, Vibration				
999							5	10	Check	Product pipes - Leakage				
999							5	10	Check	Drive - Noise, Vibrations				
999							5	10	Check	Steam systems - Leakage				
			FRAME AND BODY			**Tag 4, section 1**								
6			6-4722 7189 80	Frame			5	50	Check	Machine Shoe	90347-0175		7	
999				Cladding		TeM 1.1-1	1	50	Check	Doors and covers				
315			6-4722 8075 80			TeM 1.1.1-1	1	50	Check	Gas spring	6-4722 6143 05		2	
999						TeM 1.1	5	50	Check	Sound insulation (option)				
			DRIVE UNIT			**Tag 4, section 2**								
1			6-4722 8166 80			TeM 2.1-1	20	6000	Clean	Drive Motor - Cooling Fan	6-4722 6028 23		1	
1			6-4722 8166 80			TeM 2.1-2	10	3000	Lubricate	Drive Motor	6-4722 6028 23		1	
1			6-4722 8166 80			TeM 2.2.1-1	1	1500	Check	Drive Motor; V-Belt - Tension	6-4722 6028 23		1	
1			6-4722 8166 80			TeM 2.2.1-1	1	1500	Check	Drive Motor; V-Belt - Wear	6-4722 6028 23		1	
1			6-4722 8166 80			TeM 2.2.1-1	1	12000	Check	Drive Motor; V-Belt - Alignment	6-4722 6028 23		1	
6			6-4722 8166 80											
1			6-4722 7110 80											
94			6-4722 6660 80											

1	**Label**	Pos. No. on Drawing and Bill of Material in TeM - 3 Spare Parts
2	**Group No.**	Number of Bill of Material (Group Number) in TeM - 3 Spare Parts
3	**Doc No. Reference**	Activity no. in TeM - 2 Maintenance, where more information can be found
4	**Work time**	The approx. time in minutes to perform the action
5	**Interval**	Recommended service interval in production hours during normal running conditions and with white milk as product
6	**Action**	Description of action: Check, Change, Clean, Lubricate etc
7	**Description**	What to perform the action on
8	**Spare Part No.**	Article number of the spare part, Part No. in TeM - 3 Spare Parts
9	**Qty**	The required number of spare parts
10	**Filter Buttons**	Use these to select type of maintenance, interval, etc.

4.1.3 Checklist

Tetra Pak Processing Components AB **Preventive maintenance recommendations** Tetra Pak Homogenizer 400 Machine No: 5871116178 Date: 2016-06-16 Ver. BP

Item No	Label	Class	Group No.	Denomination	Type	Doc No. Reference	Work time (minutes)	Interval (h)	Action	Description	Spare Part No.	Denomination	Qty	Action performed Date / Result
PREVENTIVE MAINTENANCE CHECKS														
	999						5	10	Check	Leaks, noise and vibrations				
	999						5	10	Check	Product pipe - Leakage				
	999						5	10	Check	Drive - Noise and vibrations				
	999						5	10	Check	Steam system - Leakage				
CRANKCASE														
	999					TeM 2.2-1	5	10	Check	Crankcase - Oil - Level / Water				
	2		6-4722 6660 80			TeM 2.2-2	30	6000	Change	Crankcase - Oil	6-4722 7569 01		110	
	107		6-4722 7112 80			TeM 2.2-3	5	1500	Check	Oil level switch				
			6-4722 7100 80			TeM 2.2-6	1	24000	Change	Service kit Crankcase	6-4723 0290 85			
			6-4722 7100 80			TeM 2.2-6	1	60000	Change	Service kit Crankcase	6-4723 0290 95			
						TeM 2.2-8	10	500	Check	Cross head - Piston - Play				
	22		6-4722 7100 80			TeM 2.2-6	240	30000	Check	Roller bearing	6-4722 7368 01		2	
	23		6-4722 7100 80			TeM 2.2-6	240	30000	Check	Roller bearing	6-4722 7383 01		2	
	5		6-4722 6921 02			TeM 2.2-6	360	24000	Change	Plain bearing	6-4722 7398 01		5	
	22		6-4722 7100 80			TeM 2.2-6	480	60000	Change	Roller bearing	6-4722 7368 01		2	
	23		6-4722 7100 80			TeM 2.2-6	480	60000	Change	Roller bearing	6-4722 7383 01		2	
	32		6-4722 7100 80			TeM 2.2-6	5	60000	Change	Sealing box	6-4722 7386 01		1	
	33		6-4722 7100 80			TeM 2.2-6	5	60000	Change	O-ring	6-4722 6562 51		2	
	51		6-4722 7100 80			TeM 2.2-6	5	60000	Change	O-ring	6-223412 80		5	
	5		6-4722 7100 80			TeM 2.2-7	240	12000	Check	Cross head				
	6		6-4722 7100 80			TeM 2.2-7	240	12000	Check	Cross head - Bolt				
	60		6-4722 7100 80			TeM 2.2-10	1	500	Check	Bellows	6-4722 1989 01		5	
	60		6-4722 7100 80			TeM 2.2-11	60	6000	Change	Bellows	6-4722 1989 01		5	
	67		6-4722 7112 80			TeM 2.2-8	1	500	Check	Plate	6-4722 2455 01		5	
	67		6-4722 7112 80			TeM 2.2-9	5	24000	Change	Plate	6-4722 2455 01		5	
	87		6-4722 7112 80			TeM 2.2-8	1	1500	Check	Screw	90458-0072		5	
	87		6-4722 7112 80			TeM 2.2-9	5	6000	Change	Screw	90458-0072		5	
						TeM 2.2-12	1	500	Check	Connections - Leakage				

(Cont'd)

(Cont'd)

2(6)

Tetra Pak Processing Components AB **Preventive maintenance recommendations** Tetra Pak Homogenizer 400 Machine No: 5871116178 Date: 2016-06-16
Ver. BP

Item No	Label	Class	Group No.	Denomination	Type	Doc No. Reference	Work time (minutes)	Interval (h)	Action	Description	Spare Part No.	Denomination	Qty	Action performed Date / Result
COOLING CIRCUIT														
	999					TeM 2.3-1	5	250	Check	Connections - Leakage				
	Q/K810 (F/Y810)		6-4722 8470 80	C S inlet		TeM 2.3-3	5	1500	Check	Cooling water valve				
	5		6-4722 8471 80	C S crankcase		TeM 2.3-4	5	1500	Check	Cooling water regulator (Option)				
	6		6-4722 8471 80	C S crankcase		TeM 2.3-2	5	1500	Check	Trim valve				
	2		6-4722 8474 80	C S cond		TeM 2.3-6	5	1500	Check	Steam valve				
	6		6-4722 8474 80	C S cond		TeM 2.3-2	5	1500	Check	Trim valve				
	22		6-4722 8474 80	C S cond		TeM 2.3-7	120	1500	Delime	Condenser				
	44		6-4722 8475 80	C S cond outlet		TeM 2.3-8	5	1500	Check	Condensate valve				
	100		6-4722 8475 80	C S cond outlet		TeM 2.3-5	5	1500	Check	Thermometer				
	4		6-4722 8475 80	C S cond outlet			5	1500	Check	Temperature transmitter, PT-100				

(Cont'd)

(Cont'd)

3(6)

Tetra Pak Processing Components AB **Preventive maintenance recommendations** Tetra Pak Homogenizer 400 Machine No: 5871116178 Date: 2016-06-16 Ver. BP

Item No.	Label	Class	Group No.	Denomination	Type	Doc No. Reference	Work time (minutes)	Interval (h)	Action	Description	Spare Part No.	Denomination	Qty	Action performed Date / Result
			WETEND											
			Piston cartridge											
	9		6-4723 0921 80			TeM 2.4.1	1	250	Check	Piston	6-4722 8030 03		5	
	11		6-4723 0921 80			TeM 2.4.1	1	250	Check	Piston seal	6-4723 0647 01		5	
	12		6-4723 0921 80			TeM 2.4.1	1	250	Check	Piston seal	6-4722 0931 04		5	
	13		6-4723 0921 80			TeM 2.4.1	1	250	Check	Compression ring	6-4723 0208 09		5	
	14		6-4723 0921 80			TeM 2.4.1	1	250	Check	Guide band	6-4722 1418 07		10	
	16		6-4723 0921 80			TeM 2.4.1	1	250	Check	O-ring				
	17		6-4723 0921 80			TeM 2.4.1	1	250	Check	O-ring	6-4723 1370 24		5	
	18		6-4723 0921 80			TeM 2.4.1	1	250	Check	O-ring	6-4723 1370 61		5	
	56		6-4723 0921 80			TeM 2.4.1	1	250	Check	Support ring				
	57		6-4723 0921 80			TeM 2.4.1	1	250	Check	Support ring	6-4722 7159 06		5	
	9		6-4723 0921 80			TeM 2.4.1	1	1500	Change	Piston	6-4722 8030 03		5	
	11		6-4723 0921 80			TeM 2.4.1	150	750	Change	Piston seal	6-4723 0647 01		5	
	12		6-4723 0921 80			TeM 2.4.1	1	750	Change	Piston seal	6-4722 0931 04		5	
	13		6-4723 0921 80			TeM 2.4.1	1	750	Change	Compression ring	6-4723 0208 09		5	
	14		6-4723 0921 80			TeM 2.4.1	1	750	Change	Guide band	6-4722 1418 07		10	
	16		6-4723 0921 80			TeM 2.4.1	1	750	Change	O-ring				
	18		6-4723 0921 80			TeM 2.4.1	1	750	Change	O-ring	6-4723 1370 61		5	
	56		6-4723 0921 80			TeM 2.4.1	1	750	Change	Support ring				
			Valves and seals											
	23		6-4722 8161 80			TeM 2.4.2	60	1500	Check	Valve	6-4722 6648 02		10	
	24		6-4722 8161 80			TeM 2.4.2	1	1500	Check	Valve seat	6-4722 6649 05		10	
	25		6-4722 8161 80			TeM 2.4.2	1	1500	Check	Spring	6-4722 6652 01		10	
	26		6-4722 8161 80			TeM 2.4.2	1	1500	Check	Valve cage	6-4722 6657 01		10	
	27		6-4722 8161 80			TeM 2.4.2	1	1500	Check	Valve seal / O-ring	6-4722 0942 02		25	
	58		6-4722 8161 80			TeM 2.4.2	1	1500	Check	Support ring	6-4722 1178 18		25	
	23		6-4722 8161 80			TeM 2.4.2	60	6000	Change	Valve	6-4722 6648 02		10	
	24		6-4722 8161 80			TeM 2.4.2	1	6000	Turn	Valve seat	6-4722 6649 05		10	
	24		6-4722 8161 80			TeM 2.4.2	1	12000	Change	Valve seat	6-4722 6649 05		10	
	25		6-4722 8161 80			TeM 2.4.2	1	12000	Change	Spring	6-4722 6652 01		10	
	26		6-4722 8161 80			TeM 2.4.2	1	18000	Change	Valve cage	6-4722 6657 01		10	
	27		6-4722 8161 80			TeM 2.4.2	60	3000	Change	Valve seal / O-ring	6-4722 0942 02		25	
	58		6-4722 8161 80			TeM 2.4.2	1	3000	Change	Support ring	6-4722 1178 18		25	

(Cont'd)

(Cont'd)

Tetra Pak Processing Components AB **Preventive maintenance recommendations** Tetra Pak Homogenizer 400 Machine No: 5871116178 Date: 2016-06-16 Ver. BP

Item No	Label	Class	Group No.	Denomination	Type	Doc No. Reference	Work time (minutes)	Interval (h)	Action	Description	Spare Part No.	Denomination	Qty	Action performed Date / Result
HOMOGENIZING HEAD														
	9		6-4722 7402 80			TeM 2.5-2	90	6000	Change	O-ring	6-4723 1370 35		2	
	11		6-4722 7402 80			TeM 2.5-1	1	6000	Check	Sealing ring	6-4722 5233 01		2	
	13		6-4722 7402 80			TeM 2.5-9	1	6000	Change	O-ring	6-4723 1370 10		2	
	17		6-4722 7402 80			TeM 2.5-8	1	1500	Check	Forcer disc / Forcer	6-4722 9017 02		1	
	17		6-4722 7402 80			TeM 2.5-9	1	6000	Turn	Forcer disc / Forcer	6-4722 9017 02		1	
	17		6-4722 7402 80			TeM 2.5-9	1	12000	Change	Forcer disc / Forcer	6-4722 9017 02		1	
	18		6-4722 7402 80			TeM 2.5-6	1	1500	Check	Seat	6-4722 7099 04		1	
	18		6-4722 7402 80			TeM 2.5-7	1	6000	Turn	Seat	6-4722 7099 04		1	
	18		6-4722 7402 80			TeM 2.5-7	1	12000	Change	Seat	6-4722 7099 04		1	
	21		6-4722 7402 80			TeM 2.5-2	1	6000	Change	O-ring	6-4723 1370 06		2	
	22		6-4722 7402 80			TeM 2.5-2	1	6000	Change	O-ring	6-4723 1370 15		5	
	23		6-4722 7402 80			TeM 2.5-2	1	6000	Change	O-ring				
	24		6-4722 7402 80			TeM 2.5-2	1	6000	Change	Support ring	6-4722 7151 02		2	
	26		6-4722 7402 80			TeM 2.5-2	1	6000	Change	Guide band	6-4722 1418 03		4	
	27		6-4722 7402 80			TeM 2.5-2	1	6000	Change	O-ring	6-4723 1370 08		2	
	28		6-4722 7402 80			TeM 2.5-2	1	6000	Change	Support ring	6-4722 7152 03		3	
	33		6-4722 7402 80			TeM 2.5-8	1	1500	Check	Forcer disc / Forcer	6-4722 9017 01		1	
	34		6-4722 7402 80			TeM 2.5-6	1	1500	Check	Seat	6-4722 7099 01		1	
	43		6-4722 7402 80			TeM 2.5-2	1	6000	Change	O-ring	6-4723 1370 10		1	
			Hydraulic end											
	6		6-4722 7402 80			TeM 2.5-10	20	9000	Change	O-ring	6-4722 6562 46		2	
	8		6-4722 7402 80			TeM 2.5-10	1	9000	Change	Guide band	6-4306 0000 07		4	
	29		6-4722 7402 80			TeM 2.5-10	1	9000	Change	Support ring	6-4722 7153 02		2	
			Manometer flange											
	49		6-4722 8763 80			TeM 2.5.1-1	5	1500	Check	Pressure gauge	6-4722 6396 02		1	
	52		6-4722 8763 80			TeM 2.5.1-2	5	6000	Change	O-ring	6-4723 1370 52		1	
	53		6-4722 8763 80			TeM 2.5.1-2	5	6000	Change	Support ring	6-4722 8753 01		1	
			Manometer flange											
	49		6-4722 8763 81			TeM 2.5.1-1	5	1500	Check	Pressure gauge (Option)	6-4722 6396 04		1	
	52		6-4722 8763 81			TeM 2.5.1-2	5	6000	Change	O-ring (Option)	6-4723 1370 52		1	
	53		6-4722 8763 81			TeM 2.5.1-2	5	6000	Change	Support ring (Option)	6-4722 8753 01		1	

(Cont'd)

(Cont'd)

Tetra Pak Processing Components AB **Preventive maintenance recommendations** Tetra Pak Homogenizer 400 Machine No: 5871116178 Date: 2016-06-16 Ver. BP

Item No.	Label	Class	Group No.	Denomination	Type	Doc No. Reference	Work time (minutes)	Interval (h)	Action	Description	Spare Part No.	Denomination	Qty	Action performed Date / Result
			HYDRAULIC UNIT											
	1		6-4722 9408 80			TeM 2.6.1-1	1	250	Check	Hydraulic unit				
	4		6-4722 6660 80			TeM 2.6.1-1	1	250	Check	Hydraulic unit - Oil level	6-4723 0952 01		6	
	4		6-4722 6660 80			TeM 2.6.1-2	20	9000	Change	Hydraulic unit - Oil	6-4723 0952 01		6	
	5		6-4723 1911 01			TeM 2.6.1-5	1	1500	Check	Safety valve				
	8		6-4723 1911 01			TeM 2.6.1-4	5	9000	Check	Hydraulic pump	6-4723 1912 01		1	
	8		6-4723 1911 01			TeM 2.6.1-4	60	18000	Change	Hydraulic pump	6-4723 1912 01		1	
	10		6-4723 1911 01			TeM 2.6.1-3	10	9000	Clean	Filter				
	11		6-4723 1911 01			TeM 2.6.1-3	10	9000	Clean	Filter				
	32		6-4723 1911 01			TeM 2.6.1-4	1	9000	Check	Coupling				
	33		6-4723 1911 01			TeM 2.6.1-4	1	9000	Change	Rubber cross	6-4722 7551 01		1	
	2		6-4722 9408 80			TeM 2.6-1	1	3000	Check	Motor				
	5		6-4722 9408 80			TeM 2.6-1	1	3000	Check	Pressure adjusting valve				
	15		6-4722 9408 80			TeM 2.6-2	1	1500	Check	Pressure gauge - Function	6-4932 2002 45		1	
	18		6-4722 9408 80			TeM 2.6-2	1	1500	Check	Pressure gauge - Function	6-4932 2002 46		1	
	7		6-4722 9408 80			TeM 2.6-3	1	1500	Check	Pressure relief valve (Option)				
	9		6-4722 9408 80			TeM 2.6-4	1	1500	Check	Proportional valve (Option)				
	17		6-4722 9408 80			TeM 2.6-4	1	1500	Check	Proportional valve (Option)				
	13		6-4722 9408 80			TeM 2.6-5	1	1500	Check	Pressure transmitter (Option)				
			PRESSURE LUBRICATION SYSTEM											
	M803		6-4722 7113 80			TeM 2.7-1	1	1500	Check	Motor				
		999	6-4722 7113 80			TeM 2.7-1	1	3000	Check	Coupling			1	
		999	6-4722 7113 80			TeM 2.7-1	30	9000	Change	Rubber Cross	6-4722 7551 01		1	
		999				TeM 2.7-2	1	9000	Check	Safety valve				
	10		6-4722 7113 80			TeM 2.7-5	1	1500	Check	Pressure regulator				
	11		6-4722 7113 80			TeM 2.7-5	1	1500	Check	Pressure regulator				
	18		6-4722 7113 80			TeM 2.7-6	1	1500	Check	Pressure gauge				
	4		6-4722 7113 80			TeM 2.7-7	1	1500	Check	Pressure guard, 1-10 bar				
	3		6-4722 7113 80			TeM 2.7-8	1	1500	Check	Heat exchanger				
	3		6-4723 0428 80			TeM 2.7-3	1	1500	Check	Filter	6-4723 0432 01		1	
	3		6-4723 0428 80			TeM 2.7-4	30	6000	Change	Filter	6-4723 0432 01		1	
	2		6-4723 0428 80			TeM 2.7-4	30	3000	Change	O-ring	315202-0221		1	
	4		6-4723 0428 80			TeM 2.7-4	30	3000	Change	O-ring	344207-3091		1	
	5		6-4723 0428 80			TeM 2.7-3	1	1500	Check	Pressure indicator				
			FRAME AND BODY											
	999					TeM 2.8	1	50	Check	Cover - Function				
	S808		6-4722 7353 80			TeM 2.8-3	5	500	Check	Key safety switch				

(Cont'd)

(Cont'd)

Tetra Pak Processing Components AB **Preventive maintenance recommendations** Tetra Pak Homogenizer 400 Machine No: 5871116178 Date: 2016-06-16
Ver. BP

Item No	Label	Class	Group No.	Denomination	Type	Doc No. Reference	Work time (minutes)	Interval (h)	Action	Description	Spare Part No.	Denomination	Qty	Action performed Date / Result
			DRIVE UNIT											
	999		6-4722 8166 80			TeM 2.9-1	20	6000	Clean	Drive motor - Cooling fan				
	999		6-4722 8166 80			TeM 2.9-2	10	3000	Lubricate	Drive motor				
	6		6-4722 8166 80			TeM 2.9-3	1	1500	Check	V-belt - Tension / wear	6-4723 2123 06		5	
	6		6-4722 8166 80			TeM 2.9-4	30	6000	Change	V-belt	6-4723 2123 06		5	
	3		6-4722 6660 80			TeM 2.9-8	5	250	Check	Gear box - Oil - Level / Water	90458-0863		29	
	3		6-4722 6660 80			TeM 2.9-9	20	6000	Change	Gear box - Oil	90458-0863		29	
	380		6-4723 1508 01			TeM 2.9-10	1	1500	Check	Gear box - Seal ring	6-4723 2267 01		2	
	410		6-4723 1508 01			TeM 2.9-10	1	1500	Check	Gear box - Seal ring	6-4723 2270 01		2	
	7		6-4722 9310 80			TeM 2.9-11	1	1500	Check	Gear box - Adjusting bolt - Vibration damper	6-4722 7170 01		1	
	47		6-4722 9310 80			TeM 2.9-12	1	1500	Check	Axial bearing	6-4722 7173 01		1	
	48		6-4722 9310 80			TeM 2.9-12	1	1500	Check	Rubber washer	6-4722 5381 01		1	
			PRODUCT CONNECTIONS											
	63		6-4722 7111 80				1	3000	Check	O-ring	6-4723 1370 20		5	
	63		6-4722 7111 80				10	6000	Change	O-ring	6-4723 1370 20		5	
			Inlet											
	3		6-4722 8128 80			TeM 2.10.1-1	1	3000	Check	Seal ring	6-881 17115		1	
	3		6-4722 8128 80			TeM 2.10.1-1	30	6000	Change	Seal ring	6-881 17115		1	
	9		6-4722 8128 80			TeM 2.10.1-1	1	3000	Check	Seal ring	6-881 17115		1	
	9		6-4722 8128 80			TeM 2.10.1-1	1	6000	Change	Seal ring	6-881 17115		1	
			Outlet											
	13		6-4722 8129 80			TeM 2.10.2-1	1	3000	Check	Seal ring	6-881 17114		1	
	13		6-4722 8129 80			TeM 2.10.2-1	30	6000	Change	Seal ring	6-881 17114		1	
	17		6-4722 8129 80			TeM 2.10.2-1	1	3000	Check	Seal ring	6-881 17114		1	
	17		6-4722 8129 80			TeM 2.10.2-1	30	6000	Change	Seal ring	6-881 17114		1	
	23		6-4722 8129 80			TeM 2.10.2-1	1	3000	Check	Seal ring	6-881 17114		1	
	23		6-4722 8129 80			TeM 2.10.2-1	1	6000	Change	Seal ring	6-881 17114		1	
			ELECTRICAL SYSTEM											
	999					TeM 2.11.5-1	5	1500	Clean	Cooling fan - Filter				
	999					TeM 2.11.5-1	5	12000	Change	Cooling fan - Filter, PFA60.000, >90kW	90512-2814	Verify with EM		
	999					TeM 2.11.6-1	1	1500	Check	Temperature transmitter, PT-100 (Option)				
	999					TeM 2.11.7-1	5	500	Check	Emergency stop				
	999					TeM 2.11.8-1	5	500	Check	Alarm system				

5 Technical Documents

This page intentionally left blank

Tetra Pak

English

Tetra Pak Processing Components AB

Technical Data for homogenizer

Machine No.:	Model:
5871116178	Tetra Pak Homogenizer 400

General:

Capacity:	Working pressure:	Total weight:
8000-10500 l/h	400 bar	6290 kg
Altitude:	**Ambient temperature:**	**Noise reduction:**
1000 m	30 °C	22. [ ]

Wetend design:

Piston diameter:	Piston design:	Piston packing:	Valve design:	Valve seat:
56 mm	[ ] Stainless steel	[ ] PSB1	42. [X] Mushroom	[ ] Stainless steel
	2. [ ] Chromium plated	[ ] PSB3	34. [ ] Cone	35. [X] Cobalt carbide
	3. [X] Tungsten carbide	4. [ ] PSA1	39. [ ] TD	
	37. [ ] Solid Ceramic	4. [X] PSU1		

Pump version:

[ ] Pump
40. [ ] Pump with one stage
41. [ ] Pump with two stages

Homogenising device design:

Size of 1st stage:	Size of 2nd stage:	Wide gap:	Abrasive device design:	Split head:	Outlet flange for 20-60 bar:
49/58 ABR	49/58	33. [ ]	10. [X]	8. [ ]	9. [ ]

Drive motor:

Manufacture:	Model:	Revolution:	Protection:	Thermistor:	Weight:
Siemens	1LE1503 315L 4 IE3	1488 rpm	IP55	<7.5 V DC	1190 kg
Power:	**Voltage:**	**Frequency:**	**Full load current:**	**Starting current:**	
200 kW	400 D V	50 Hz	340 A	2516 A	

Hydraulic motor:

Manufacture:	Model:	Revolution:	Protection:
Siemens	1LA9070 71M 4	1410 rpm	IP55
Power:	**Voltage:**	**Frequency:**	**Rated current:**
0,25 kW	400 D V	50 Hz	0,81 A

Pressure lubrication motor:

Manufacture:	Model:	Revolution:	Protection:
Siemens	1LE1003 100L 4	1465 rpm	IP55
Power:	**Voltage:**	**Frequency:**	**Rated current:**
2,2 kW	400 D V	50 Hz	4,4 A

Drive unit:

V-belt type:	Number of tracks:	Motor pulley diameter:	Gearbox pulley diameter:	V-belt length:	Belt tension (New/Used):
XPC	5	300 mm	425 mm	2650 mm	1291/1123 N (45,2/42,1 Hz)

Gearbox:

Manufacture:	Model:	Reduction:
SEW	X2FA140/T	10,92

Oil:

Crankcase:	Viscosity:	Gearbox:	Viscosity:	Hydraulic unit:	Viscosity:
[X] Mineral type	220 cSt	[X] Mineral type	320 cSt	[ ] Mineral type	68 cSt
[ ] Synthetic type		[ ] Synthetic type		[ ] Synthetic type	
[ ] Food Grade type		[ ] Food Grade type		[X] Food Grade type	

Cooling water supply:

Pressure:	Consumption:	Temperature:	Hardness:
2-4 bar	1100 l/h	<25 °C	<10 °dH

Steam supply:

Pressure:	Consumption:
2-4 bar	50 kg/h

Condensate:

Temperature:
105-110 °C

Automation:

Cooling water valve pneumatic:		Remote on/off setting of hydraulic pressure:	Remote indication of product pressure:
11. [X]		18. [ ]	14. [ ] 1st stage 38. [X] 1st + 2nd stage
Machine control:	**Inlet pressure transmitter:**	**Remote continuous setting of hydraulic pressure:**	**Remote indication of hydraulic pressure:**
28. [X]	48. [X]	20. [X]	16. [ ]

Date:	Sign:	Revision:
2016-10-07	TP	1

Tetra Pak

English

Tetra Pak Processing Components AB

Test Record for homogenizer

Machine No.:	Model:
5871116178	Tetra Pak Homogenizer 400

Performance data

Test liquid:	Test voltage:
Water 40-70°C	400 V

Test time	Homogenizing pressure	Capacity	Crankshaft revolution	Current consumption	Frequency	Stage 1		Stage 2		LPRV	
						Hydraulic pressure	Signal	Hydraulic pressure	Signal	Hydraulic pressure	Relief pressure
(h)	(bar)	(l/h)	(rpm)	(A)	(Hz)	(bar)	(mA)	(bar)	(mA)	(bar)	(bar)
1	80	10850	106	54	54,5	-	-	22	8,9	-	-
	100	10830	106	64	54,5	13	5,3	22	8,9	-	-
	200	10730	106	109	54,5	42	7,6	22	8,9	-	-
	300	10630	106	152	54,5	70	9,8	22	8,9	-	-
6	400	10540	105	193	54,5	98	12	22	8,9	-	-
1	400	8020	80	146	41,5	98	12	22	8,9	-	-

Manufacturing No.

Main motor:	Gearbox:	Starter panel:
UC 1609/184799801	60.7333430201.0004.16	0116001263
Pump block:	Crankcase:	Frequency inverter:
A 6979	1677	S/N: 004508H356

Date:	Test performed by:
2016-10-07	Mikael Lindholm
Date:	Test approved by:
2016-10-07	Thomas Carlsson

Declaration of Conformity

Tetra Pak Processing Components AB
Ruben Rausings gata
S-221 86 Lund
Sweden

declare that this machine/ equipment:

Tetra Pak Homogenizer 400
Machine no. 5871116178

follows the harmonized standards:

EN ISO 12100:2010
EN ISO 13857:2008
EN ISO 13850: 2008
EN 60204-1:2006+A1:2009
EN 1672-2: 2005+A1:2009
EN 61000-6-2:2005+AC:2005
EN 61000-6-4:2007+A1:2011

and is in conformity with
Pressure Equipment Directive 97/23/EC:
Category 1
Module A

Certification body:

and is in conformity with the provisions of the Directives including amendments:

[X] 2006/42/EC Machinery
[X] 2004/108/EC Electromagnetic compatibility (EMC)
[X] 2006/95/EC Low Voltage

The following person is authorised to compile the technical file:
Nils Wendestam
Tetra Pak Processing Components AB
Ruben Rausings gata
S-221 86 Lund
Sweden

Lund 2016-10-17

Daniel Mårtensson
Acting Technical Director

English
FORM 5147 version 2014-10-03

Tetra Pak®

TABULATION

Machine name and type: **Tetra Pak Homogenizer 400**

Serial number: **Machine no. 5871116178**

Denomination	Article no.	Verification module	Remarks
Inlet Damper		Category 1	Module A
Outlet Damper		Category 1	Module A

To whom it concerns

Declaration of Compliance

"We confirm that the Tetra Pak Homogenizer 400
Machine no. 5871116178
supplied by Tetra Pak, was at the time of installation
incompliance with relevant legislative demands;

- *Regulation (EC) No. 1935/2004 on materials and articles intended to come into contact with food* including underlaying directives for specific materials and *Regulation (EU) No. 10/2011 on plastic materials and articles intended to come into contact with food* where applicable. For the equipment a specific Declaration of Conformity is issued for each delivery.
  We also confirm compliance to
- *Regulation No. (EU) 2023/2006 on Good Manufactoring Practice on materials and articles intended to come into contact with food.*

We also confirm that for the purpose of this equipement, all spare parts and spare part kits of components intended for food contact currently delivered by Tetra Pak are in compliance with *Regulation (EC) No. 1935/2004* including underlaying directives for specific materials and *Regulation (EU) No. 10/2011 where appliciable*".

Yours faithfully,

Daniel Mårtensson
Acting Technical Director

Lund
2016-10-17

This page intentionally left blank

Tetra Pak® Homogenizer 400
5871116178 Issue 2016-10
Doc. No. TeM-3285754-0101

Tetra Pak® Homogenizer 400 1(2)
5871116178 Issue 2016-10
Doc. No. TeM-3285754-0101

Tetra Pak® Homogenizer 400
5871116178 Issue 2016-10
Doc. No. TeM-3285754-0101

Tetra Pak® Homogenizer 400 2(2)
5871116178 Issue 2016-10
Doc. No. TeM-3285754-0101

Tetra Pak® Homogenizer 400
5871116178 Issue 2016-10
Doc. No. TeM-3285754-0101

Tetra Pak® Homogenizer 400 1(2)
5871116178 Issue 2016-10
Doc. No. TeM-3285754-0101

Tetra Pak® Homogenizer 400
5871116178 Issue 2016-10
Doc. No. TeM-3285754-0101

Tetra Pak® Homogenizer 400 2(2)
5871116178 Issue 2016-10
Doc. No. TeM-3285754-0101

Tetra Pak® Homogenizer 400
5871116178 Issue 2016-10
Doc. No. TeM-3285754-0101

Tetra Pak® Homogenizer 4001(3)
5871116178 Issue 2016-10
Doc. No. TeM-3285754-0101

Tetra Pak® Homogenizer 400
5871116178 Issue 2016-10
Doc. No. TeM-3285754-0101

Tetra Pak® Homogenizer 400 2(3)
5871116178 Issue 2016-10
Doc. No. TeM-3285754-0101

Tetra Pak® Homogenizer 400
5871116178 Issue 2016-10
Doc. No. TeM-3285754-0101

Tetra Pak® Homogenizer 400 3(3)
5871116178 Issue 2016-10
Doc. No. TeM-3285754-0101

Tetra Pak® Homogenizer 400
5871116178 Issue 2016-10
Doc. No. TeM-3285754-0101

Tetra Pak® Homogenizer 4003(3)
5871116178 Issue 2016-10
Doc. No. TeM-3285754-0101

Tetra Pak® Homogenizer 400
5871116178 Issue 2016-10
Doc. No. TeM-3285754-0101

Tetra Pak® Homogenizer 400 1(2)
5871116178 Issue 2016-10
Doc. No. TeM-3285754-0101

Tetra Pak® Homogenizer 400
5871116178 Issue 2016-10
Doc. No. TeM-3285754-0101

Tetra Pak® Homogenizer 400 2(2)
5871116178 Issue 2016-10
Doc. No. TeM-3285754-0101

Tetra Pak® Homogenizer 400
5871116178 Issue 2016-10
Doc. No. TeM-3285754-0101

Tetra Pak® Homogenizer 400 1(3)
5871116178 Issue 2016-10
Doc. No. TeM-3285754-0101

Tetra Pak® Homogenizer 400
5871116178 Issue 2016-10
Doc. No. TeM-3285754-0101

Tetra Pak® Homogenizer 400 2(3)
5871116178 Issue 2016-10
Doc. No. TeM-3285754-0101

Tetra Pak® Homogenizer 400
5871116178 Issue 2016-10
Doc. No. TeM-3285754-0101

Tetra Pak® Homogenizer 400 3(3)
5871116178 Issue 2016-10
Doc. No. TeM-3285754-0101

Tetra Pak® Homogenizer 400
5871116178 Issue 2016-10
Doc. No. TeM-3285754-0101

Tetra Pak® Homogenizer 400 3(3)
5871116178 Issue 2016-10
Doc. No. TeM-3285754-0101

Tetra Pak® Homogenizer 400
5871116178 Issue 2016-10
Doc. No. TeM-3285754-0101

Tetra Pak® Homogenizer 400
5871116178 Issue 2016-10
Doc. No. TeM-3285754-0101

Tetra Pak® Homogenizer 400
5871116178 Issue 2016-10
Doc. No. TeM-3285754-0101

Tetra Pak® Homogenizer 400 1(3)
5871116178 Issue 2016-10
Doc. No. TeM-3285754-0101

Tetra Pak® Homogenizer 400 1(2)
5871116178 Issue 2016-10
Doc. No. TeM-3285754-0101

Tetra Pak® Homogenizer 400 2(3)
5871116178 Issue 2016-10
Doc. No. TeM-3285754-0101

Tetra Pak® Homogenizer 400 2(2)
5871116178 Issue 2016-10
Doc. No. TeM-3285754-0101

Tetra Pak® Homogenizer 400 3(3)
5871116178 Issue 2016-10
Doc. No. TeM-3285754-0101