Technical Manual (TeM)

Document ID: TeM-3285195-0102
Machine No.: T5844130774

This manual consists of the documents stated below

Document No.	Description	Section
Introduction		1
TeM-1224886-0101	Introduction	
Safety Precautions		2
TeM-1227123-0101	Safety Precautions	
Installation		3
TeM-3284672-0101	Installation	
Maintenance		4
TeM-1210835-0101	Maintenance	
Preventive Maintenance Recommendations List		5
PMR5844130774	Preventive Maintenance Recommendations List	
GD5844130774-01	Gasket Documentation	
PMR1163426	Preventive Maintenance Recom. List, Tubular Heat Exchanger	
SP1163426	Service Parts, Tubular Heat Exchanger	
Technical Data		6
TeM-1228490-0101	Technical Data, Noise Emission Values	
PC5844130774-01	Production Configuration	
CD5844130774-01	Connection Data	
HE1_S5844130774	Specification, Tubular Heat Exchanger	
HE5_D5844130774	Specification, Plate Heat Exchanger	
Flow Diagram		7
1834-1048-01	Flow Diagram Symbols	
30242-1353	Flow Diagram	
Item List		8
IL5844130774-01	Item List	
IL1163426	Item List, Tubular Heat Exchanger	
Layout		9
32420-3852	Assembly Layout, ISO	
32420-3853	Installation Layout	

For Component instructions, see separate headline or binder

TocTemplateTeM_01.pdf

Technical Manual (TeM)

Document ID: TeM-3285195-0102
Machine No.: T5844130774

This manual consists of the documents stated below

Document No.	Description	Section
32420-3854	Configuration Layout	
COL1163426	Configuration Layout, Tubular Heat Exchanger	
DRW1163426	Layout, Tubular Heat Exchanger	
Service Media		10
TeM-1227937-0101	Service Media	
External Upstream/Downstream Equipment		11
TeM-1249029-0101	External Upstream/Downstream Equipment	
Cleaning		12
TeM-1231256-0101	Cleaning	
Function Documents		13
AD5844130774	Activation Diagrams	
CDN5844130774	Communication Description	
PLCP5844130774	PLC Parameter List	
PLCRP5844130774	PLC Parameter List	
PME5844130774	Parameter Miscellaneous Equipment List	
SD5844130774	Sequence Diagram	
Certificates		14
PEDDoC5844130774-01	Declaration of Conformity, PED (pressure equip. directives)	
PET5844130774	PED (pressure equipment directives) Tabulation	
DoCp5844130774	Declaration of Compliance	

For Component instructions, see separate headline or binder

TocTemplateTeM_01.pdf

Introduction

TechPub_2614345_0106 - TeM_1224886_0101.fm

This page intentionally left blank

TechPub_2614345_0106 - TeM_1224886_0101.fm

Manual Information . . . . . 1 - 5
Delivered Manuals . . . . . 1 - 5
Typographical Conventions . . . . . 1 - 5
Symbols . . . . . 1 - 5
Design Modifications . . . . . 1 - 6
Document Producer . . . . . 1 - 6
Machine Introduction . . . . . 1 - 7
Intended Use of the Equipment . . . . . 1 - 7
Manufacturer . . . . . 1 - 7
Support and Feedback . . . . . 1 - 7
Declaration of Conformity . . . . . 1 - 7
Identification . . . . . 1 - 8
CE Compliance . . . . . 1 - 8
Machine Plate . . . . . 1 - 8
Content of This Manual . . . . . 1 - 9
Safety Precautions . . . . . 1 - 9
Introduction . . . . . 1 - 9
Installation . . . . . 1 - 9
Commissioning Report . . . . . 1 - 9
Commissioning Kit List . . . . . 1 - 9
Maintenance . . . . . 1 - 10
Preventive Maintenance Recommendations List . . . . . 1 - 10
Spare Part List/kit . . . . . 1 - 10
Technical Data . . . . . 1 - 10
Flow Diagram . . . . . 1 - 11
Item List . . . . . 1 - 11
Layouts . . . . . 1 - 12

TechPub_2614345_0106 - TeM_1224886_0101.fm

Service Media . . . . . 1 - 13
External Up/down- Stream Equipment . . . . . 1 - 13
Cleaning . . . . . 1 - 13
Functional Documents . . . . . 1 - 13
Certificates . . . . . 1 - 14
Component Instructions . . . . . 1 - 14

TechPub_2614345_0106 - TeM_1224886_0101.fm

Manual Information

Tetra Pak recommends reading all delivered manuals carefully. Make sure that the delivered manuals are available to personnel who operate or maintain the equipment.

It is important to keep this manual for the lifetime of the equipment and to pass the manual on to any subsequent holder or user.

Tetra Pak will not be held responsible for any damage to the equipment caused by not following the instructions given in this manual.

Delivered Manuals

The documentation for this equipment consists of the following parts:

- Operation Manual
- Technical Manual
- Electrical Manual (if applicable)

Typographical Conventions

Controls on the operator panel, emergency stop devices, and program steps are printed in CAPITAL LETTERS.

Menu names, button names and other text displayed in software are printed in `Courier`.

Cross-references are underlined.

Symbols

Symbols used in illustrations.

	A pointer arrow indicates the position of an object.
	A zoom arrow indicates that an object view is enlarged. The arrow points towards the enlarged view of the object.
	A rotation movement arrow indicates rotational movement of an object. The arrow points in the direction of rotation.
	A straight movement arrow indicates movement of an object. The arrow points in the direction of movement.

TechPub_2614345_0106 - TeM_1224886_0101.fm

Design Modifications

The directives in this document are in accordance with the design and construction of the machine at the time it was released by the Tetra Pak machine production facility.

The English language version of this document contains the original instructions. All other language versions are translations of the original instructions.

Document Producer

This document has been produced by:

Tetra Pak Dairy & Beverage Systems AB
Ruben Rausings gata
S-221 00 LUND
Sweden

Additional copies can be ordered from Tetra Pak Parts or the nearest Tetra Pak office. When ordering additional copies, always provide the document number.

Copyright © 2009 Tetra Pak Dairy & Beverage Systems AB
All rights reserved. No parts of this document or application software used in the product may be edited, reproduced or copied in any form or by any means without the written permission of Tetra Pak Dairy & Beverage Systems AB.

TechPub_2614345_0106 - TeM_1224886_0101.fm

Machine Introduction

Intended Use of the Equipment

This equipment is intended for use according to the specifications in Technical data (see Technical Manual) and related documents.

All other use is prohibited. Tetra Pak will not be held responsible for injury or damage if the equipment is used for any other purpose.

Manufacturer

This Tetra Pak equipment has been manufactured by

Tetra Pak Dairy & Beverage Systems AB
Ruben Rausings gata
S-221 86 LUND
Sweden

Support and Feedback

If you encounter problems when operating this equipment or have other inquiries, comments, or suggestions for improvement, contact Tetra Pak.

Declaration of Conformity

A signed Declaration of Conformity is delivered with this manual.

TechPub_2614345_0106 - TeM_1224886_0101.fm

Identification

CE Compliance

This equipment complies with the basic health and safety regulations of the European Economic Area (EEA).

Machine Plate

The illustration below shows an example of the machine plate and its location on the equipment. The machine plate carries data needed when contacting Tetra Pak concerning this specific equipment.

Make sure that the equipment data in the front pages of this manual corresponds to the machine plate data and the machine specification.

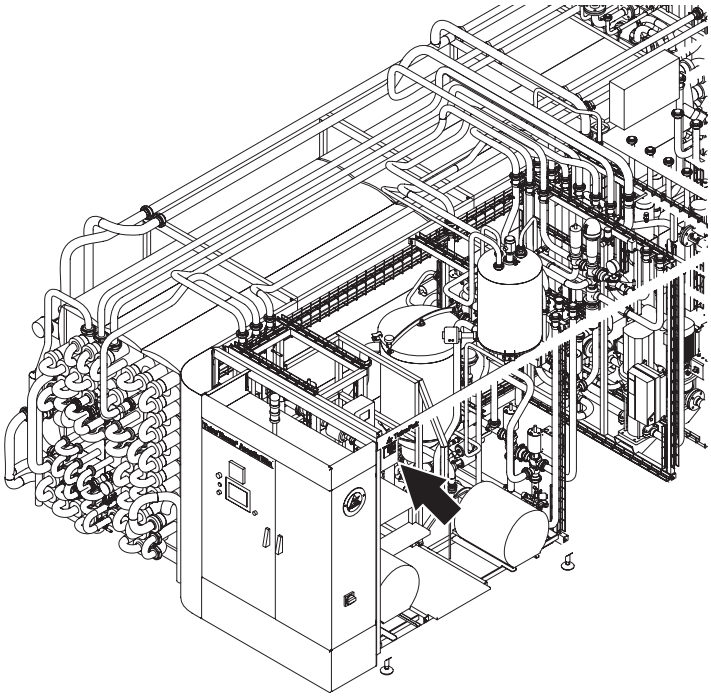

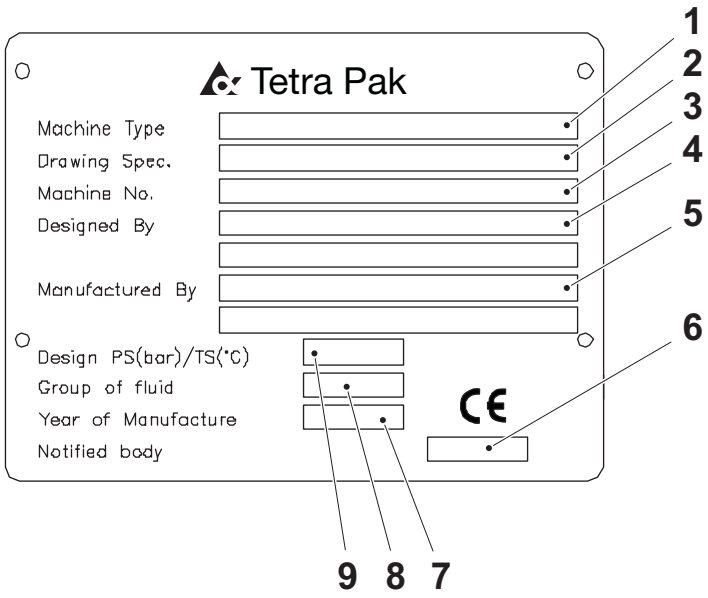

1 Machine type
2 Drawing specifications
3 Machine serial number
4 Designed by
5 Manufacturer
6 Notified body
7 Year of manufacture
8 Group of fluid
9 Design PS (bar)/TS (°C)

TechPub_2614345_0106 - TeM_1224886_0101.fm

Content of This Manual

The technical manual (TeM) normally contains the following chapters, depending on the equipment, however the number of chapters and their contents may vary.

Safety Precautions

Contains precautions to ensure maximum safety for all personnel operating the equipment.

Introduction

Contains information about:

- how to read the safety precautions
- producer of the manual
- equipment identification
- information about the design of equipment documentation
- information about the TeM, e.g. to keep it available

Installation

Is a description of:

- preparatory work to be done on site
- how to install the equipment on site
- how to de-commission and dismantle the equipment
- recommendation for disposal

Commissioning Report

Is a description of how to commission the equipment. This description can sometimes have a pre-made report included. The report shall be used, and filled out, during commissioning and be returned to Tetra Pak

Commissioning Kit List

Is a list of tools/spare parts needed during commissioning. The list is based on experience.

(Cont'd)

TechPub_2614345_0106 - TeM_1224886_0101.fm

(Cont'd)

Maintenance

Information about:

- preventive maintenance recommendations
- lubrication, if relevant

Preventive Maintenance Recommendations List

Preventive maintenance recommendations list specifies:

- activities (what to do)
- service intervals (when to do)
- spare parts (what to change)

and refers to the instructions in relevant Maintenance & Spare parts documents in the chapter Component instructions.

Spare Part List/kit

Spare part list is a list of recommended spare parts for components of the equipment.

Spare part kit list is a list of spare parts delivered with the equipment.

Technical Data

Technical data is normally made as separate documents:

- technical specification (contains equipment name, options and major components)
- connection data (is a list of media connections for each component/ connection)
- equipment configuration (is a general description of how the liquid food will be processed and when major parts of the equipment is in use, e.g. deaerators and homogenisers, type of product, temperature programs and operation data)
- generated noise (if noise level is higher than 70B(A))
- heat exchanger calculations, if relevant

(Cont'd)

TechPub_2614345_0106 - TeM_1224886_0101.fm

(Cont'd)

Flow Diagram

The flow diagram describes the system design of a equipment:

- included main components
- in detail, all liquid flows in the equipment
- valve arrangements
- CIP-circuits
- connection points for service media
- process control, when appropriate

Each item in the flow diagram has a unique label corresponding to the item-list.

Item List

The item list is a summary of all equipment (normally except pipes and fittings) in the module. It includes information about:

- item number
- label number
- No. (quantity)
- material number
- denomination (type of equipment)
- type
- capacity/consumption
- doc. no.
- revision number

Components are marked with position number (label) which are marked on the flow diagram.

(Cont'd)

TechPub_2614345_0106 - TeM_1224886_0101.fm

(Cont'd)

Layouts

Layouts information normally consists of the following documents:

- Installation layout
- Assembly layout
- Configuration layout

Installation Layout

This drawing is intended to be used by the customer during site preparations and installations. The layout shows:

- physical dimensions of the equipment (s)
- location of main equipment, if relevant
- connection points for media
- connection points for drainage (only for capacity above 500 l/h)
- temperature of drainage media (only for temperature above 50°C)
- included sub-modules with weight above 1.000 kgs (incl. number of legs)
- if relevant, site walls and pillars
- if relevant required service and safety area around the equipment

Assembly Layout

A drawing intended for positioning of a machine both in the workshop and at the customer site.

Configuration Layout

Is a drawing showing pipe combinations e.g. for:

- a tubular heat exchanger
- swing bends

(Cont'd)

TechPub_2614345_0106 - TeM_1224886_0101.fm

(Cont'd)

Service Media

Is a specification of required quality of each service media:

- electricity
- water
- steam
- compressed air
- ice water
- cooling water

External Up/down- Stream Equipment

Specification of demands on upstream and downstream equipment that is connected to the machine, e.g.:

- pressure
- temperature
- flow
- etc

Cleaning

Is a description of how cleaning is to be made and a specification of liquids etc to be used.

Functional Documents

Note! The function documents are for use during commissioning by Tetra Pak and normally only available in english.

Is the basis for programming of PLC control systems.

The functional document is done as one document or as following separate documents:

- sequence diagram
- activation diagram
- operating instructions

(Cont'd)

TechPub_2614345_0106 - TeM_1224886_0101.fm

(Cont'd)

Activation Diagram

Is made for systems controlled by a PLC or similar. It is a matrix diagram showing:

- activations
- step functions

Sequence Diagram

Is a diagram and/or verbal description of the step sequence:

- Start conditions for each function
- How the function is initiated (e.g. start order)
- Function sequence with jumps and events
- How the function is terminated or aborted (e.g. stop order, abort order)
- Conditions for temporary stop (if relevant)
- Conditions for restart

Operating Instructions

This description is made only for manually operated equipment.

Certificates

All certificates made out for a specific equipment, such as:

- CE-declaration of conformity, Machinery directive
- when relevant, CE-declaration of conformity PED

Component Instructions

MaSP - Maintenance and Spare Part Instructions. Instructions for components in the equipment.

TechPub_2614345_0106 - TeM_1224886_0101.fm

Tetra Pak

Safety Precautions

TechPub_2614345_0106 - TeM_1227123_0101.fm

Safety Precaution Instructions

WARNING

Read all safety precaution instructions throughout this manual and on safety signs attached to this equipment. Failure to follow all safety precaution instructions could result in death or serious injury.

WARNING

This manual does not cover the safety precaution instructions for the homogeniser. The safety instructions regarding the homogeniser are included in the delivered homogeniser documentation.
Failure to follow all safety precaution instructions could result in death or serious injury.

Definition of Lockout Procedure

A lockout procedure is a procedure to put each necessary energy isolating device in its safe position to prevent the energisation of the equipment, such as when a maintenance procedure should be carried out.

A lockout is the use of a device, for example, a padlock, to make sure that an energy isolating device cannot be operated.

An energy isolating device is a mechanical device that physically prevents transmission or release of energy, such as a power supply disconnector.

TechPub_2614345_0106 - TeM_1227123_0101.fm

Safety Messages Description . . . . . 1 - 5

Personnel Requirements . . . . . 1 - 6

Skilled Person . . . . . 1 - 6

Instructed Person. . . . . 1 - 6

Hygiene. . . . . 1 - 7

Food product . . . . . 1 - 7

Steam Barrier . . . . . 1 - 7

Checkpoints . . . . . 1 - 8

Safety Signs. . . . . 1 - 9

Locations of Safety Signs . . . . . 1 - 11

Protective Devices. . . . . 1 - 12

Emergency Stop. . . . . 1 - 12

Emergency Stop Push-Buttons . . . . . 1 - 12

Self closing gate. . . . . 1 - 13

Safeguards . . . . . 1 - 14

Warning Lamp . . . . . 1 - 16

Safe Manual Handling . . . . . 1 - 17

Personal Protection. . . . . 1 - 18

Noise Hazard . . . . . 1 - 18

Entanglement Hazard . . . . . 1 - 18

Personal Protective Equipment . . . . . 1 - 18

Hazardous Substances . . . . . 1 - 19

Disposal of Chemical Substances . . . . . 1 - 20

Cleaning and Disinfection Chemicals . . . . . 1 - 21

Emergency Procedures. . . . . 1 - 21

Supply Systems. . . . . 1 - 22

TechPub_2614345_0106 - TeM_1227123_0101.fm

Power Supply . . . . . 1 - 22
Residual Voltage . . . . . 1 - 23
Electrical Cabinet . . . . . 1 - 23
Socket Outlet . . . . . 1 - 24
Air Supply . . . . . 1 - 25
Steam Supply . . . . . 1 - 25
Water Supply . . . . . 1 - 25
Power Failure . . . . . 1 - 26

TechPub_2614345_0106 - TeM_1227123_0101.fm

Safety Messages Description

A safety message is always accompanied by a safety alert symbol and a signal word.The safety alert symbol is used to alert about potential personal injury hazards. To avoid hazards, obey all safety messages that follow this symbol.

The following safety alert symbols and signal words are used in this manual to inform the user of hazards.

DANGER	Danger indicates an imminently hazardous situation which, if not avoided, will result in death or serious injury.
WARNING	Warning indicates a potentially hazardous situation which, if not avoided, **could** result in **death or serious injury**.
CAUTION	Caution indicates a potentially hazardous situation which, if not avoided, **may** result in **minor or moderate injury.** It may also be used to alert against unsafe practices.
CAUTION	Caution without the safety alert symbol indicates a potentially hazardous situation which, if not avoided, **may** result in **property damage**.

TechPub_2614345_0106 - TeM_1227123_0101.fm

Personnel Requirements

Note! Personnel includes all persons working on or near this equipment.

Only skilled or instructed persons are allowed to work with this equipment.

Skilled Person

A skilled person must have relevant education and experience to enable him or her to identify hazards, analyse risks, and avoid hazards which electricity, machinery, chemicals, other energies, and supply systems on this equipment can create.

Skilled persons must meet local regulations, such as certifications and qualifications for working with these energies and systems.

Instructed Person

An instructed person must be adequately advised or supervised by a skilled person. The skilled person enables the instructed person to identify hazards, analyse risks, and avoid hazards which electricity, machinery, chemicals, other energies, and supply systems on this equipment can create.

TechPub_2614345_0106 - TeM_1227123_0101.fm

Hygiene

Food product

Avoid microbiological contamination of the food product:

- Never clean the floors or the equipment in the process room (area) when the equipment is in production.
- Compressed air used for cleaning purposes should only be used outside the process room (area).
- Disinfect your hands before touching anything that may come into contact with the product.
- Keep your hands and gloves clean.
- Always wear some type of hair protection (cap or hairnet) and clean clothes (preferably white).
- Do not wear a watch, ring, necklace, earrings, or any other exposed jewellery.

Steam Barrier

Steam barriers of the product valve in filling machine or Tetra Alsafe tank employs a steam barrier to separate the product supply line from the filling machine/aseptic tank. The steam barrier allows the filling machine/aseptic tank and the product line to be independently sterilized or cleaned. Steam barriers can also be found in end valve clusters to minimize risk of contamination during filling. In applications with full flexibility between sterilisers, aseptic tanks and fillers, steam barriers are often used in mix-proof valves.

Steam barriers for pump bearings, flange joints safety valves etc are common in process equipment where sterility is required.

- Never disengage the steam barrier, and never interrupt the steam supply when any of the equipment above is brought into pre-sterilizing phase or when the equipment is already in production phase or aseptic intermediate cleaning phase.
- If any maintenance activities require disengagement of the steam barrier or interruption of the steam supply to the equipment, make sure that no commercial product can be contaminated.

(Cont'd)

TechPub_2614345_0106 - TeM_1227123_0101.fm

(Cont'd)

Checkpoints

CAUTION

Risk for unsterility and contaminated product

Leaking components may cause unsterility and contaminate the product. If a leakage is detected, shut down production and make a CIP.
Check/renew leaking parts prior to start up of a production.
Processed product should be stored and carefully checked for contamination prior to distribution to market.

Continuous and systematic leakage check of the equipment must be done:

- During manual preparation.
- During the pre-sterilisation phase.
- In conjunction with production start up.
- During production - once every hour.
- During AIC/CIP phase.

To ensure a safe product, it is important that the following checkpoints during the processing of the product are confirmed:

- That the selected configuration (capacity, temperature...) is valid for the food product to be processed.
- That no open tanks etc are exposed to foreign objects/contamination.
- That carry-over of potential allergens between products during product change and cleaning is consider. A close inspection of the equipment is of utmost importance if a possible risk occurs - refer to QA system.
- That the correct recipe is selected.
- That ingredients are of the correct type and amount according to recipes.
- That the cleaning solutions are of correct type, concentration and amount according to recipes.
- That no food residue according to defined control points remains after finalized cleaning.
- That no residue of chemicals is present after cleaning the equipment.

TechPub_2614345_0106 - TeM_1227123_0101.fm

Safety Signs

WARNING

Damaged or missing safety signs increase the risk of death or serious injury.

Replace all missing or damaged safety signs immediately.

Safety signs are attached to the equipment. The table below lists all the signs that are used, and illustrations show their locations on the equipment. Each position number refers to two variants of a safety sign in the table, but only one is used on the equipment.

- Make sure that each safety sign is legible and in its correct position after installation and maintenance.
- Replace all missing or damaged safety signs immediately.

Pos.	ISO sign	ANSI sign
1		
	Hazardous noise. Risk of impaired hearing. Wear hearing protection.	
2		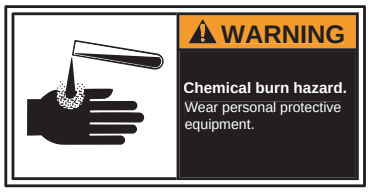
	Chemical burn hazard. Wear personal protective equipment.	
3		
	Hot surface. Do not touch. Follow lockout procedure before maintenance.	
4		
	Equipment sensitive to welding First, disconnect all power and fuses in panel. Do NOT weld on panel. Ground close to welding point.	

TechPub_2614345_0106 - TeM_1227123_0101.fm

Pos.	ISO sign	ANSI sign
5		
	Fall hazard. Be careful when using stairways and ladders.	
6		
	Pressurized device. Can cause serious injury. Follow instructions for safe work practice.	
7		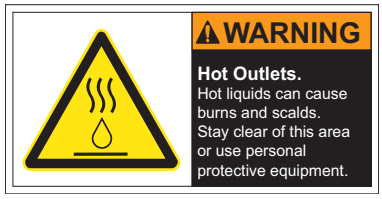
	Hot Outlets. Hot liquid can cause burns and scalds. Stay clear of this area or use personal protective equipment.	

TechPub_2614345_0106 - TeM_1227123_0101.fm

Locations of Safety Signs

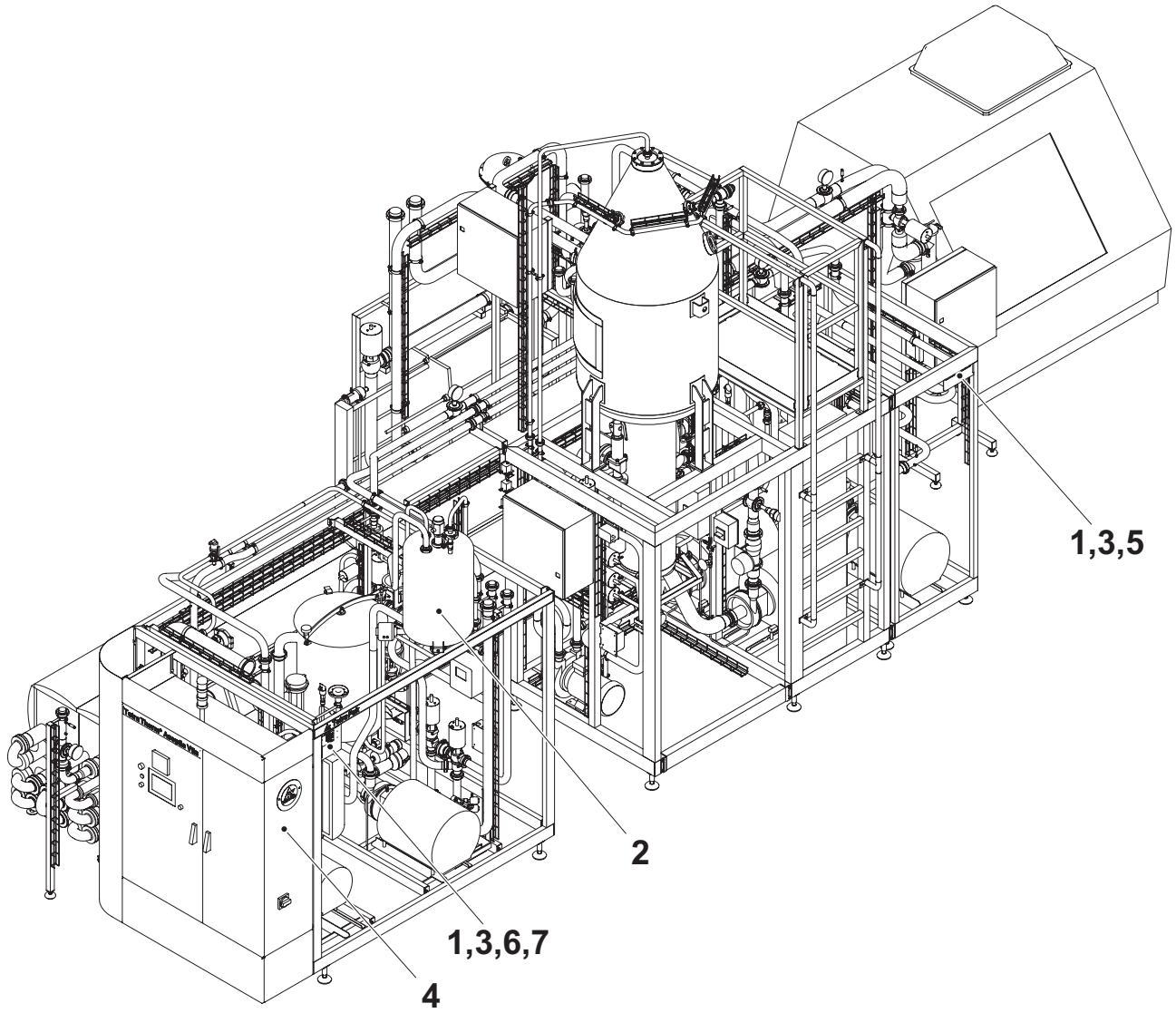

The illustration shows an example of a Tetra Therm Aseptic VTIS installation

TechPub_2614345_0106 - TeM_1227123_0101.fm

Protective Devices

There are different kinds of protective device designed to ensure safe use of the equipment. See the sections below.

WARNING

Hazardous zones.

Hazardous zones are safeguarded and provided with protective devices. Do not inch or run this equipment if any protective device is inoperative.

Change inoperative components of the safety system immediately.

For the locations of safeguards and/or other protective devices not mentioned in this section, see the Maintenance Manual.

WARNING

Hazardous voltage.

Hazardous voltage remains on this equipment after activating an EMERGENCY STOP or an interlocking device.

Emergency Stop

Emergency stop devices are used to stop this equipment immediately in an hazardous situation. Learn the positions of all emergency stop devices and how to use them.

Instructions for a normal production stop are included in the Stop chapter of the Operation Manual.

Emergency Stop Push-Buttons

Push one of the EMERGENCY STOP push-buttons to stop this equipment immediately.

The location of the EMERGENCY STOP push-button is shown by an arrow.

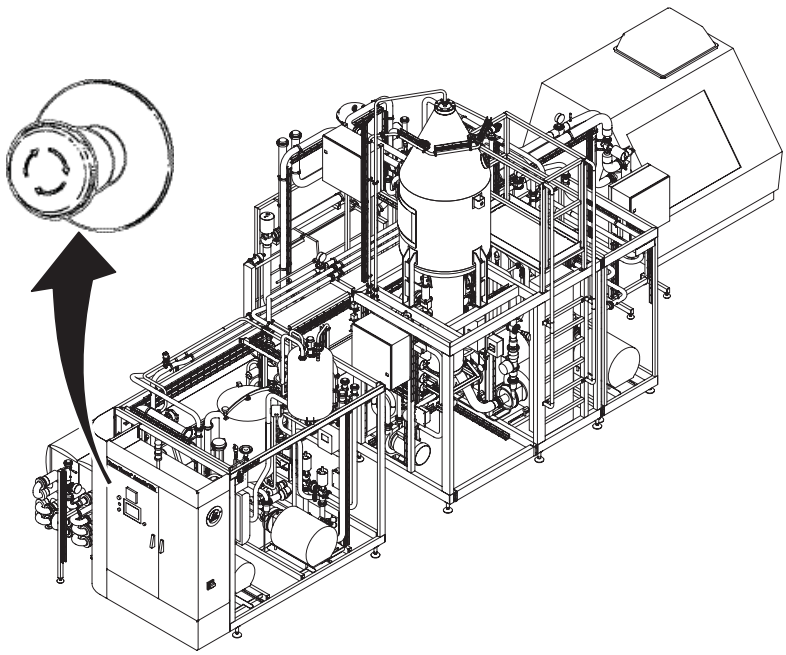

TechPub_2614345_0106 - TeM_1227123_0101.fm

Self closing gate

The platform is supplied with a self closing gate. Make sure that gate is automatically closed after opening.

The location of the hinges are shown by an arrow.

WARNING

Fall hazard.

Make sure that the gate is properly closed when using the platform.

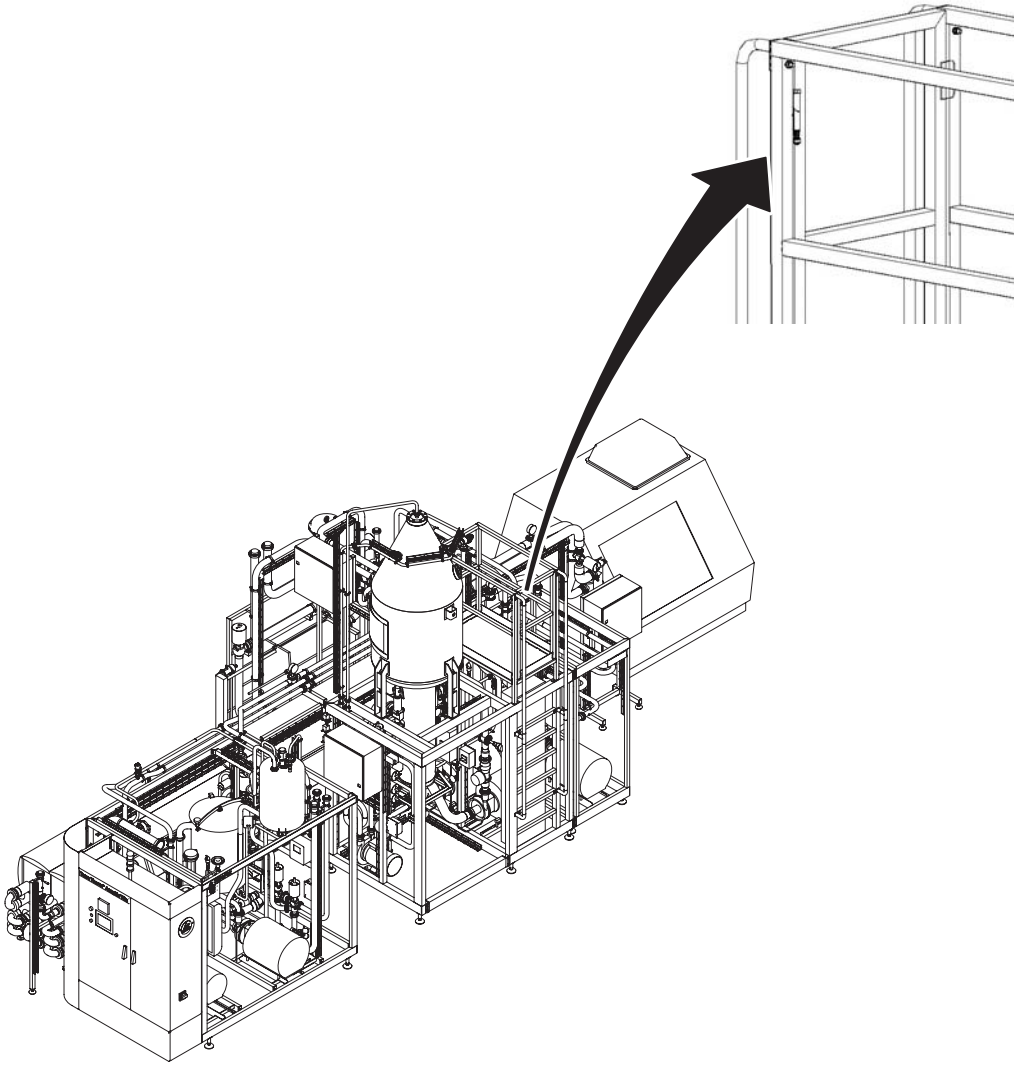

TechPub_2614345_0106 - TeM_1227123_0101.fm

Safeguards

WARNING

Moving machinery.

Never defeat or bypass the interlocking devices.

Movable guards, for example, doors and covers leading to hazardous zones, are fitted with interlocking devices where required. These devices are usually electric safety switches that are parts of the safety system and must never be defeated, bypassed, or otherwise made inoperative.

WARNING

Corners and edges.

To prevent injury from corners and edges of open doors and covers, close them unless they must be open during such work. Be careful when working under an open door, cover or elsewhere below parts of the equipment with corners and edges.

CAUTION

Burn hazard.

Parts of this equipment may be hot after operation.

After installation and maintenance, and before this equipment is inched or run, check that all safeguards are in place and that they operate correctly.

(Cont'd)

TechPub_2614345_0106 - TeM_1227123_0101.fm

(Cont'd)

CAUTION
Equipment damage.
Never stop this equipment by opening an interlocking guard.

The location of the interlocking guard is shown by an arrow.

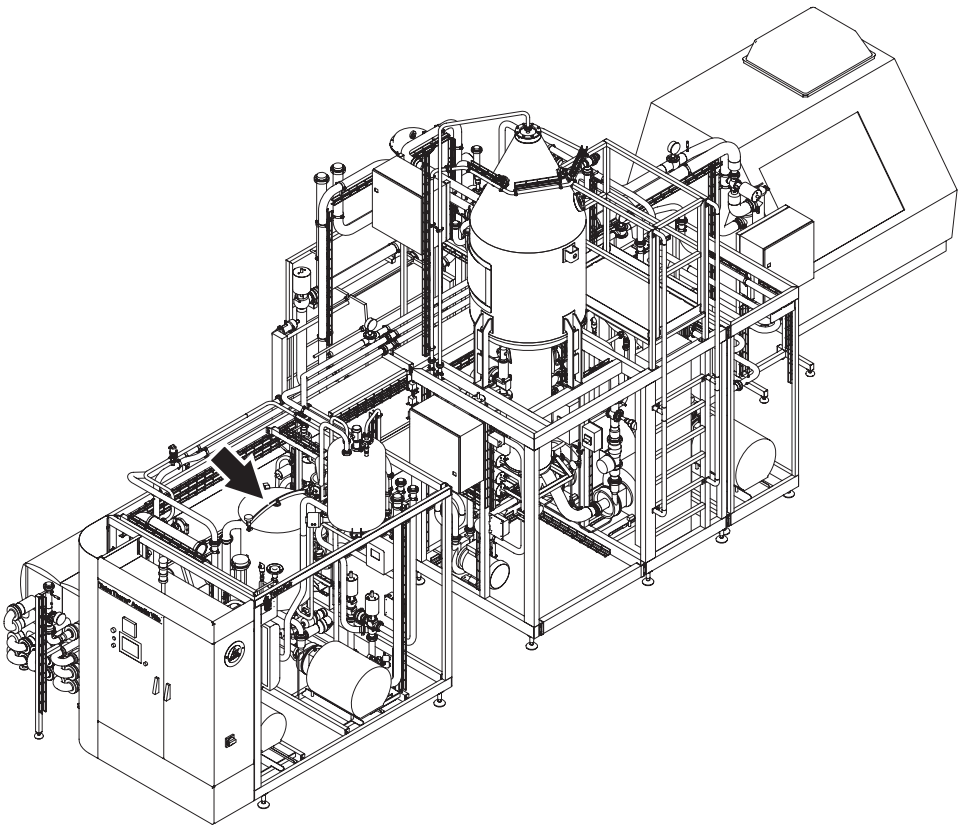

TechPub_2614345_0106 - TeM_1227123_0101.fm

Warning Lamp

A warning lamp is a column of warning lights:

- Red light (1) indicates that the machine is emergency stopped
- Yellow light (2) flashes when an abnormal condition occurs, an impending critical condition calling for action by the operator
- Green light (3) indicates a normal condition, such as production

Note! For a complete list of alarms, see the Operation Manual.

The light stops flashing and remains lit when the alarm is acknowledged. After the fault is corrected or the operator takes the appropriate action, the warning light turns off.

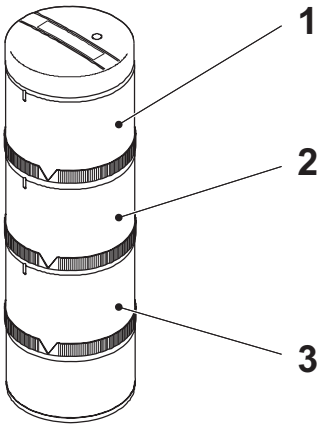

1 Red light
2 Yellow light
3 Green light

TechPub_2614345_0106 - TeM_1227123_0101.fm

Safe Manual Handling

Use mechanical lifting aids whenever possible. If mechanical lifting aids are not available, do not attempt to lift loads over 23 kg without the assistance of a colleague. Avoid lifting below knee height and above shoulder height. If it is necessary to lift from the floor, follow the instructions below to reduce the risk of back and disc injuries.

- Use safety shoes and be sure that the surface of the floor is not slippery.
- Get close to the load.
- Take a wide stance and find the best positions for your feet.
- Bend your hips and knees, and use your leg muscles.
- Keep the load close to your body.
- Do not twist your body while moving the load.
- Take small steps when turning.

In order to reduce the risk of injury to discs and back muscles, be careful to not bend or twist your back when lifting. Keep the load close to your body to reduce the strain on your back.

To reduce the ergonomic risks to each individual operator, job rotation is recommended, so that recovery and variety are provided.

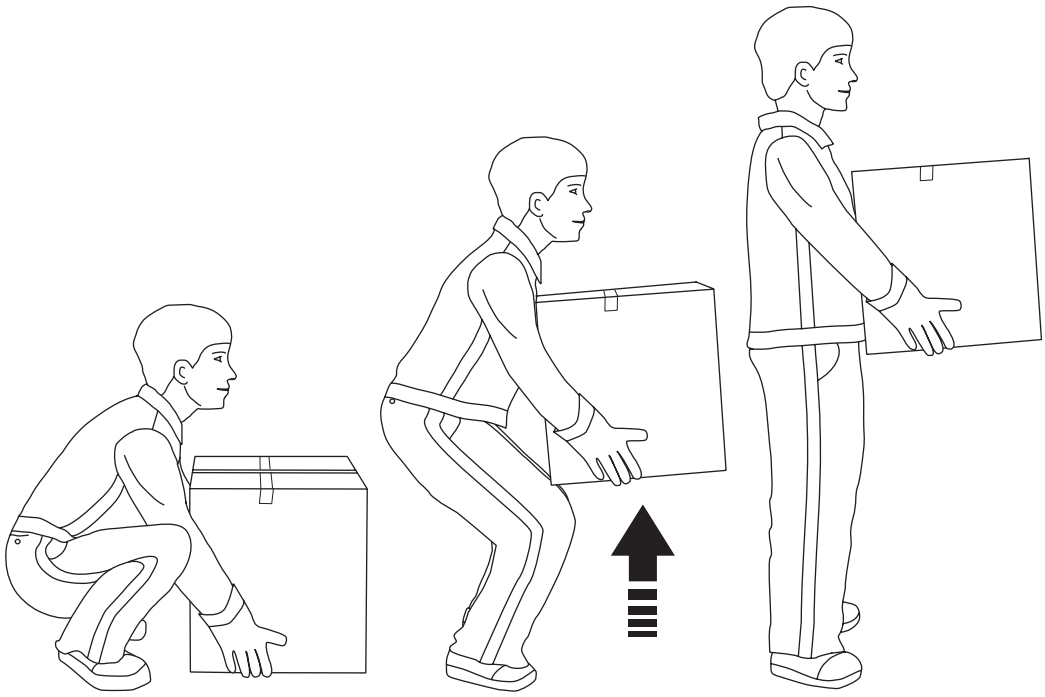

TechPub_2614345_0106 - TeM_1227123_0101.fm

Personal Protection

This section applies to all personnel at all times when this equipment is in operation. For special personal protection required when handling hazardous substances, see the Hazardous Substances section.

Noise Hazard

WARNING
Hazardous noise.
Risk of impaired hearing.
Wear hearing protection whenever this equipment is in operation.

Entanglement Hazard

WARNING
Risk of entanglement.
Do not wear jewellery or loose clothing when working on or near this equipment. Long hair may not be loose.

Personal Protective Equipment

Following personal protective equipment is recommended to wear during normal operation and maintenance:

- hearing protection
- protective shoes or boots made of PVC, PE plastic, or rubber
- protective clothes

During handling of chemicals, manual cleaning of equipment and maintenance of machinery that have used chemicals add following extra protection:

- protective goggles (for instance, TP No. 90303-11), tight fitting
  If there is a risk of splashes, a visor is a suitable complement
- protective gloves made of neoprene (for instance, TP No. 90303-12), nitrile, or butyl rubber
- protective apron (for instance, TP No. 90303-13), or protective suit when handling larger amounts of chemicals
- proper respiratory equipment, if ventilation is insufficient

WARNING
Risk of falling
For safe inspection or maintenance of components that can not be reached from floor level or platform, use lifting device or shoulder harness.

TechPub_2614345_0106 - TeM_1227123_0101.fm

Hazardous Substances

WARNING

Contact with chemicals can cause death, serious injury, or illness.
Always read and follow the instructions in the safety data sheet supplied by the manufacturer or local supplier, when handling chemicals.

Make sure that

- the safety data sheet is available
- the showers work
- an eyewash device, movable or wall-mounted, is available and operational
- additional washing facilities are nearby

Note! Learn the locations of all washing facilities in order to act immediately in case of an accident





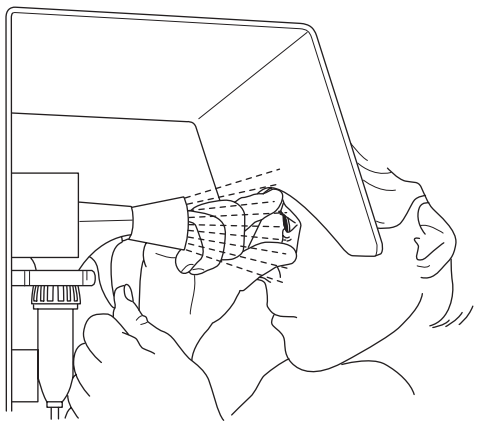

TechPub_2614345_0106 - TeM_1227123_0101.fm

Disposal of Chemical Substances

Always read and follow the disposal instructions in the safety data sheet supplied by the manufacturer or local supplier.

It is strongly recommended that used chemical containers are

- disposed of according to the instructions immediately after use
- not used as disposal containers for other chemicals in order to avoid uncontrolled chemical reactions within the container

TechPub_2614345_0106 - TeM_1227123_0101.fm

Cleaning and Disinfection Chemicals

WARNING
Corrosive chemical.
Wear personal protective equipment.

In both liquid and gas states, these chemicals may cause irritation or damage if they comes into contact with skin, mucous membranes, eyes, or clothes. Call for medical attention immediately if there is an accident.

Consult the instructions on the label of the tank or container.

Emergency Procedures

If there is an accident rinse the affected area as soon as possible with large amounts of water.

Eyes

If splashes or vapour from these chemicals comes in contact with the eyes

- wash the eyes thoroughly with lukewarm water for 15 minutes (keep eyelids wide apart)
- call for medical attention immediately

Skin

If these chemicals comes into contact with skin or clothes

- rinse immediately with plenty of water
- call for medical attention immediately if skin burns appear
- thoroughly wash the clothes before wearing them again

Inhalation

If irritation or pain is experienced due to having **inhaled** these chemicals vapour

- leave the affected area and get some fresh air
- call for medical attention if the symptoms get worse

Ingestion

If these chemicals are swallowed

- do not attempt to cause vomiting
- drink large amounts of lukewarm water to dilute these chemicals
- call for medical attention immediately

TechPub_2614345_0106 - TeM_1227123_0101.fm

Supply Systems

Power Supply

DANGER

Hazardous voltage and moving machinery.
The power supply disconnector must be turned off and secured with a lock before any maintenance.

Note! The key to the lock must be removed by the technician and retained in his/her possession until all work is completed.

Certain maintenance procedures may require power supply systems to be on. These exceptions are clearly stated in the Component instructions.

The illustrations show the power supply disconnector and its location.

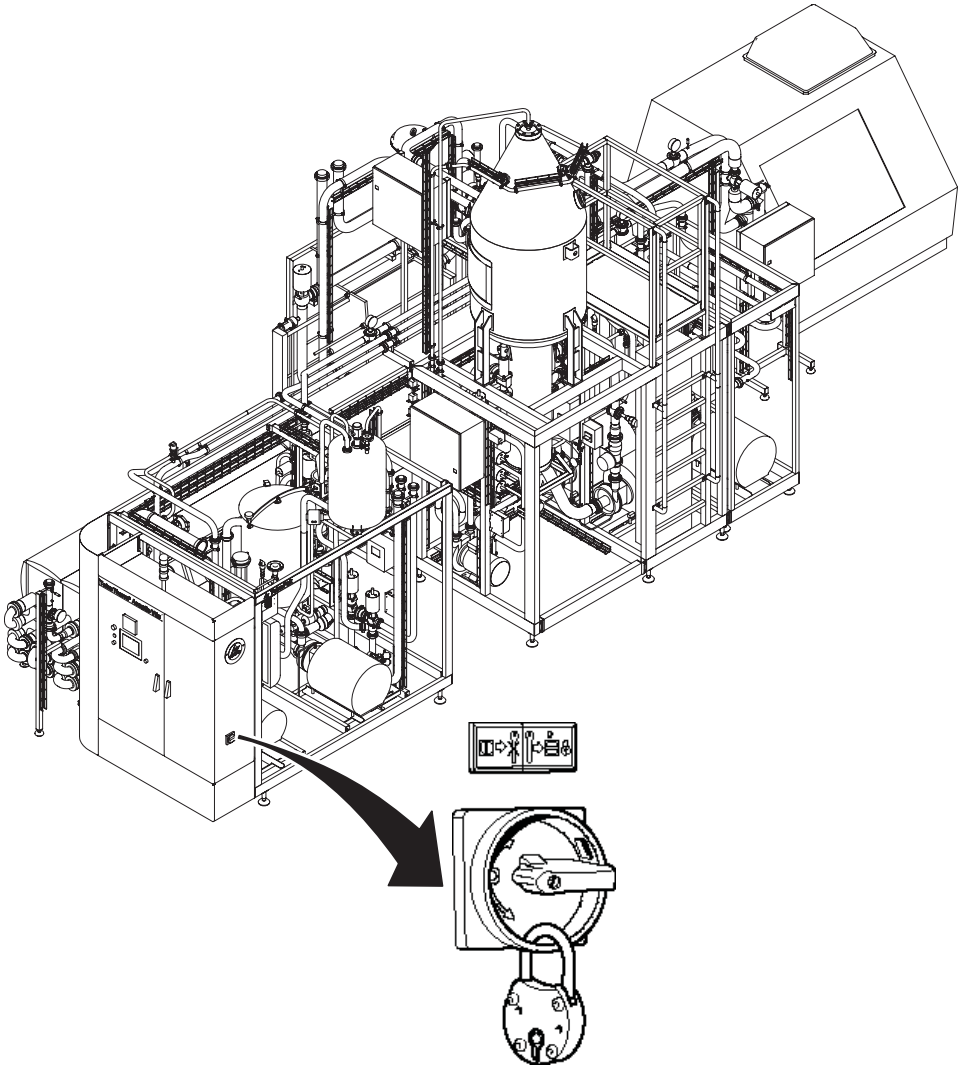

NOTE: The lock is not a part of the delivery

TechPub_2614345_0106 - TeM_1227123_0101.fm

Residual Voltage

DANGER

Hazardous voltage.
Do not touch any terminals immediately after the power supply disconnector is turned off. Ensure that no residual voltage remains on the capacitors before touching. Wait five minutes. Failure to observe this information will cause death or serious injury.

After the power supply disconnector is turned off, residual voltage remains in the capacitor circuits.

Electrical Cabinet

DANGER

Hazardous voltage.
Will shock, burn, or cause death.
The power supply disconnector must be turned off and secured with a lock before maintenance inside the electrical cabinet.

Note! The key to the lock must be removed by the technician and retained in his/her possession until all work is completed.

Make sure that the electrical cabinet doors are closed after working inside the electrical cabinet. Doors with lock must be locked.

The location of each electrical cabinet is shown by an arrow.

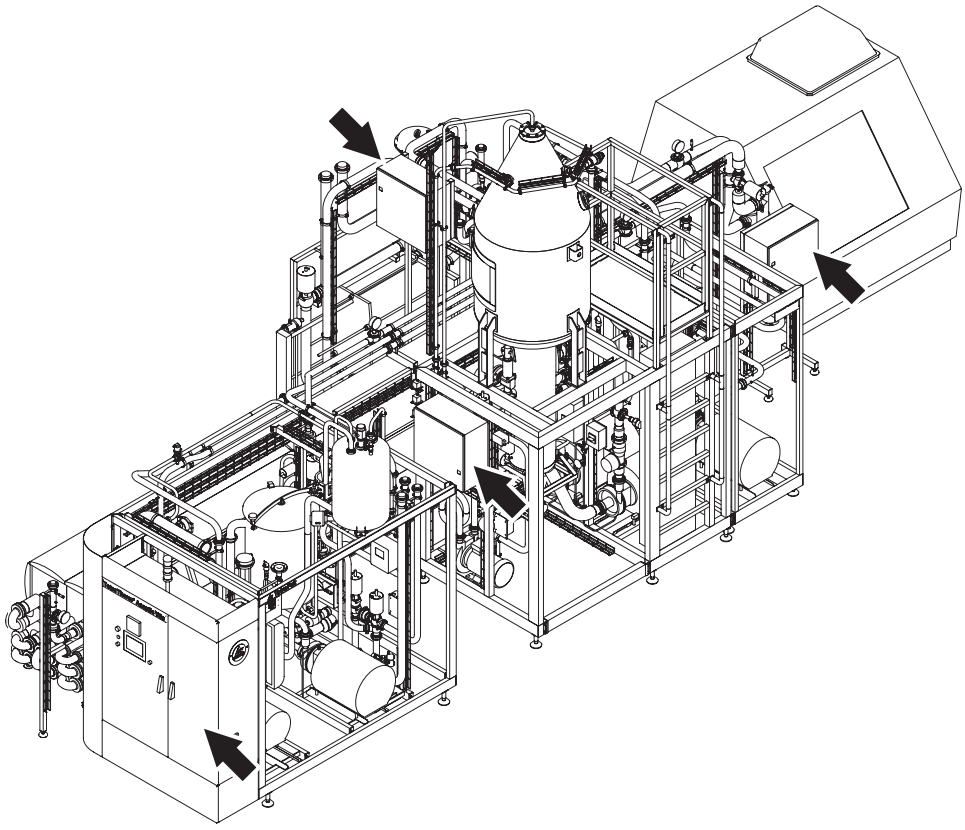

TechPub_2614345_0106 - TeM_1227123_0101.fm

Socket Outlet

WARNING

Hazardous voltage.

Can shock, burn, or cause death. Read the Maintenance Manual before using this socket outlet.

The socket outlet (1) is connected to a residual current device (2) to protect users against electrical shock if there is an earth fault in the connected equipment. The residual current device shall be tested each time before the socket outlet is being used. See relevant MaSP for test procedure.

The illustrations show the socket outlet, the residual current device, and their location.

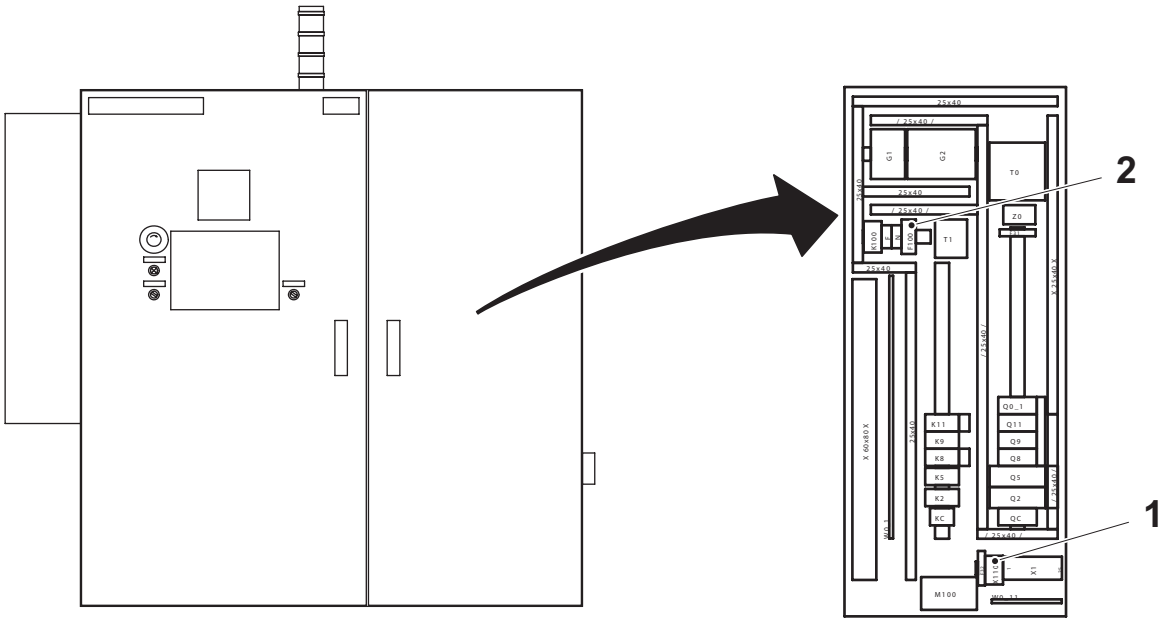

1 Socket outlet
2 Residual current device

TechPub_2614345_0106 - TeM_1227123_0101.fm

Air Supply

WARNING
Compressed air and moving machinery.
Close the main air valve and lock it before any maintenance.

Note! The key to the lock must be removed by the technician and retained in his/her possession until all work is completed.The lock is not a part of the delivery.

Certain maintenance procedures may require air supply systems to be on. These exceptions are clearly stated in the Component instructions.

Steam Supply

WARNING
Hot steam can cause scalds.
Pressurized steam can be discharged unexpectedly.
Close the steam supply valve and lock it, depressurize and vent all steam safely before any maintenance on parts with steam, such as pipes and valves.

Note! The key to the lock must be removed by the technician and retained in his/her possession until all work is completed.

Certain maintenance procedures may require steam supply systems to be on. These exceptions are clearly stated in the Component instructions.

WARNING
Hot parts can cause severe burns.
Pipes, valves, and other parts containing steam can be extremely hot.
Do not touch hot parts.

Water Supply

CAUTION
Water under pressure.
Close the water supply valves before any maintenance.

Certain maintenance procedures may require water supply systems to be on. These exceptions are clearly stated in the These exceptions are stated in the Component instructions.

TechPub_2614345_0106 - TeM_1227123_0101.fm

Power Failure

WARNING

Risk of exposure to pressurised hot liquid (water, product, lye, acid etc.)

To avoid exposure make sure that skilled maintenance personnel is available before any remedying action.

The process equipment may contain trapped hot pressurized liquid in certain areas even during powerless conditions.

TechPub_2614345_0106 - TeM_1227123_0101.fm

Tetra Pak

Installation

TechPub_2614345_0110 - TeM_3284672-0101.fm

This page intentionally left blank

TechPub_2614345_0110 - TeM_3284672-0101.fm

Introduction . . . . . 1 - 5

Prior to Operation . . . . . 1 - 5

Preparation of Site . . . . . 1 - 5

Installation . . . . . 1 - 5

Commissioning . . . . . 1 - 6

Preparatory Work . . . . . 1 - 7

General . . . . . 1 - 7

Site Location . . . . . 1 - 7

Processing Room Temperature, Humidity and Air Quality . . . . . 1 - 7

Use of Inert Gases . . . . . 1 - 8

Services . . . . . 1 - 8

Floor Drains . . . . . 1 - 8

Installation Instructions . . . . . 1 - 10

Requirements on Personnel . . . . . 1 - 10

Storage . . . . . 1 - 11

Unloading and Moving the Equipment . . . . . 1 - 12

Lifting and Unloading Crates . . . . . 1 - 12

Using a Fork Lift . . . . . 1 - 13

Using an Overhead Gantry or Mobile Crane . . . . 1 - 14

Moving Crates . . . . . 1 - 15

Unpacking and Inspection . . . . . 1 - 16

Lifting and Transporting . . . . . 1 - 18

Using Forklift . . . . . 1 - 18

Using Strings . . . . . 1 - 18

Using Strops . . . . . 1 - 18

Centre of Gravity . . . . . 1 - 19

Positioning . . . . . 1 - 19

Using Forklift . . . . . 1 - 19

Using Strings . . . . . 1 - 19

Using Strops . . . . . 1 - 19

TechPub_2614345_0110 - TeM_3284672-0101.fm

Positioning the Included Process Modules . . . . 1 - 20
Levelling . . . . . 1 - 21
Positioning Control Panel . . . . . 1 - 22
Positioning and Erection of Heat Exchangers . . 1 - 23
Positioning and Erection of the S-vessel Direct Heat Module (DHM) . . . . . 1 - 28
Positioning and Erection of the F-vessel Direct Heat Module (DHM) . . . . . 1 - 30
Positioning and Erection of Deaerator . . . . . 1 - 32

Check After Installation . . . . . 1 - 35
Checks to be Made . . . . . 1 - 35

When to Start Commissioning . . . . . 1 - 36

Commissioning . . . . . 1 - 37
General . . . . . 1 - 37
Commissioning Documents . . . . . 1 - 37
Commissioning Kit . . . . . 1 - 37

De-Commissioning . . . . . 1 - 38
General . . . . . 1 - 38

TechPub_2614345_0110 - TeM_3284672-0101.fm

Introduction

Prior to Operation

Between the time of ordering and normal running, several phases must be executed:

- Preparation of site
- Installation
- Commissioning

Preparation of Site

Preparation of the site can take place prior to equipment delivery. For detailed information see **Preparatory work**.

Installation

Installation covers all work from receipt of the equipment to assembled and partly tested equipment, e.g.:

- Lifting
- Mechanical erection
- Testing of parts of the plant

For detailed instructions see **Installation instructions**.

TechPub_2614345_0110 - TeM_3284672-0101.fm

Commissioning

Commissioning covers testing and tuning of the plant to bring it into commercial production.

To ensure an efficient commissioning the following work must be completed before the commencement of commissioning:

- Preparatory work
- Installation work

Furthermore, all required services must be connected and available.

Raw material to be processed must be available at short notice.

The following personnel are requested to be available for training purposes and to assist the commissioning engineer:

- Operators
- Utility welder and erector
- TIG welder
- Electrician

IMPORTANT!
When to start commissioning is a detailed check list giving conditions which must be fulfilled before the commencement of commissioning.

Note! You can not start commissioning before the list is completed.

TechPub_2614345_0110 - TeM_3284672-0101.fm

Preparatory Work

General

To ensure correct and efficient preparation, always refer to the **Technical data** and the Installation layout provided for the plant.

If you have any questions - please contact Tetra Pak.

Site Location

The choice of site location should be determined with regard to the utilities and supplies required by the machine and access limitations.

Access is required for a fork lift or lifting equipment should be available to site the machine.

The installation site must be prepared in advance by the customer.

No special foundation work is required for the machine. The floor should be strong enough to support the full weight of the machine when product is present.

Check that doorways and passages are of sufficient width and height to allow the equipment to pass and clear of obstructions.

Processing Room Temperature, Humidity and Air Quality

It is recommended to filter the incoming air, and its temperature and humidity controlled.

The following table taken from Tetra Pak Guideline for the Hygienic Production of Liquid Food, Site & Building Recommendations (QAM-588013-0104) lists recommended ventilation data for a processing room,

Air temperature	15° to 30° C (60° to 85° F)
Humidity	30% to 70%
Air speed	0.2 - 0.3 m/sec (8 - 12 in/sec)
Over-pressure	5 - 15 Pa
Sojourn height	3 m (10 ft) Note: For all practical purposes, the sojourn height is sufficient to calculate volume of air movement and is normally the working space for personnel.
Filtration*	Filter test grading G4 better F5 Arrested contaminants: >5microns Note: G4 and F5 describe a level of filtering efficiency. Please consult “Guideline for the Hygienic Production of Liquid Food”, Site & Building Recommendations chapter ‘2.3 Air Handling’ for more information.
Air exchanges	3 / hour

Note! *The above specifications should be regarded as a minimum requirement. A stricter requirement for the incoming air quality should be based upon customer product quality demands and equipment installed.

TechPub_2614345_0110 - TeM_3284672-0101.fm

Use of Inert Gases

In aseptic tanks, sterile air or inert gases are used to keep the tank atmosphere aseptic.

Sufficient ventilation of processing equipment like tanks and vessels as well as in processing rooms are of extremely importance if inert gases like nitrogen are used in aseptic tanks or other process applications.

The process room must be ventilated in a sufficient way so it can handle the **complete tank gas volume** without reaching a **critically low** oxygen level.

DANGER

Always read the Safety Precaution

Services

To facilitate the installation and save time, the required media supplies should be installed in advance.

Connections from these services to the Tetra Pak equipment should be located approximately as shown in the assembly drawings, ready to be attached to the Tetra Pak equipment.

Note! The connection data in the Technical Manual specifies **maximum allowable pressure and temperature** of incoming media supply. Always secure that correct pressure and temperature are connected to the equipment.

WARNING

Risk of serious injury and equipment damage.

Safety of the assembly will be jeopardized if any media pressure or media temperature exceeds the specification stated in Connection Data.

Ensure that the services fully satisfy the specifications laid down in the **Technical data** and related documents.

Floor Drains

Floor drains are necessary to collect liquid waste from the equipment.

When preparing floor drains consider the following:

- Collect all drain points to floor drains to keep the floors dry.
- Valve cluster outlets should never be welded to factory floor drains.
- The lowest connection point should be at least 130 mm above the floor. This is to facilitate efficient service, to verify correct functioning and to make sure the flow of condensate or CIP liquids is visible at all times.
- Each outlet of a valve cluster must be separately visible and not connected to a common drain pipe.

TechPub_2614345_0110 - TeM_3284672-0101.fm

Consider also:

- Capacity of drains (see **Technical data**)
- Locations of drain points (see **Installation layout**)

Note! Installation material for the collecting of discharged liquid is not included in the delivery.

TechPub_2614345_0110 - TeM_3284672-0101.fm

Installation Instructions

Requirements on Personnel

Mechanic

Skilled mechanic with at least two years experience of industrial maintenance. Proven skill in reading engineering drawings.

Electrician

Certified according to local regulations with at least 3 years' experience of similar types of installations. Proven skills in reading and working from drawings and cable lists. Knowledge of local safety regulations for power and automation. Furthermore the electrician must ensure that the electrical installation, including the equipment or device that work has been carried out on, has been adequately checked regarding the safety of personnel and property before it is put into operation.

TIG Welder

At least 3 years' previous experience of similar types of installations, including argon gas welding with stainless steel, thin-walled material. Proven skills in reading installation drawings and isometric drawings.

Utility Welder and Erector

At least 3 years' experience of similar types of installations, covering arc and gas welding in e.g. steam pipes and compressed air pipes. Proven skills in reading installation drawings and isometric drawings.

CAUTION

Unauthorized personnel

Operation by unauthorized personnel may endanger personnel and property

TechPub_2614345_0110 - TeM_3284672-0101.fm

Storage

To avoid damage to the equipment during storage the following requirements should be met:

Storage Class A

Type of equipment:

- control panels
- electronic equipment
- electric control equipment (contactors, instruments etc.)
- machines with build-in control equipment

to be stored indoors, warm and dry.

Temperatures: +10°C - +40°C

Humidity: 20% - 85%

Storage Class B

Type of equipment:

- pumps
- valves
- transformers
- electric cables
- all goods not identified as class A or C

to be stored in a ventilated building with a dry floor

Storage Class C

Type of equipment:

- stainless steel equipment
- mild steel installation material
- mechanical equipment

may be stored outdoors on well drained ground, covered with tarpaulins.

CAUTION
Noncompliance with these requirements may endanger the equipment

TechPub_2614345_0110 - TeM_3284672-0101.fm

Unloading and Moving the Equipment

Lifting and Unloading Crates

DANGER

Risk of crushing!

Be sure to use the right equipment with the required capacity, during lifting and unpacking. Follow local regulations regarding lifting.

Labels, symbols, and warning placards are located on the external surfaces of the transit crate and outline the handling principles which must be observed.

- The crate should not be subjected to sudden shocks or movement.
- The crate is not load bearing and must not be stacked or have other items placed on it.
- The transit crate should be kept in the indicated upright position.

Labels may be installed to indicate that the crate has been tipped over or exposed to extremes of humidity.

Symbol	Meaning
	Centre of gravity
	Lifting points for chains, cables, ropes or slings
	This way up
	Fragile
	Keep dry
FRAGILE	“Fragile” warning
HANDLE WITH CARE	“Handle with care” warning
GROSS KG.	“Gross weight” value

TechPub_2614345_0110 - TeM_3284672-0101.fm

Symbol	Meaning
NET KG.	“Net weight” value

Using a Fork Lift

DANGER

Risk of crushing!

The crate may tilt if not observing the centre of gravity or the fork lift points. Failure to observe this may result in immediate danger to life and/or major damage to equipment.

The crate is marked with centre of gravity symbol (1).

The lifting forks (2). must be positioned at equal distances from the symbol when lifting the crate. The forks should be set as wide as possible.

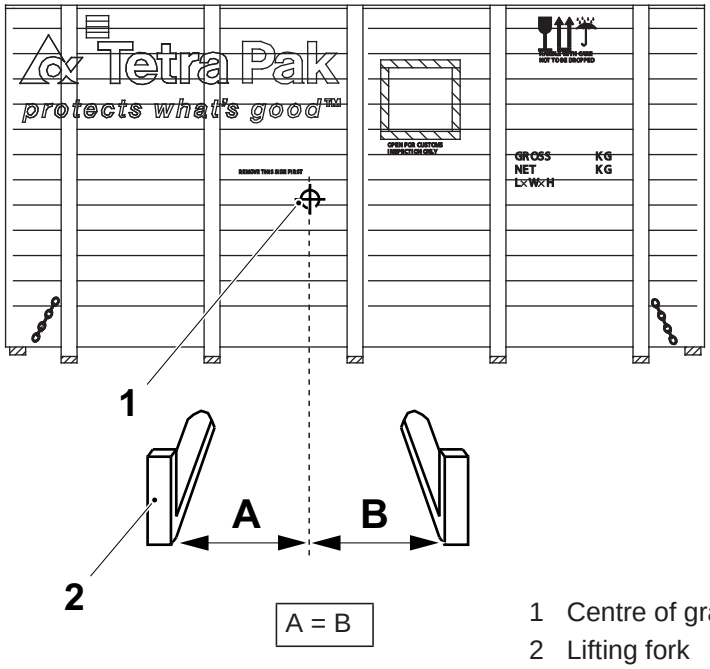

1 Centre of gravity symbol
2 Lifting fork

TechPub_2614345_0110 - TeM_3284672-0101.fm

Using an Overhead Gantry or Mobile Crane

The crate is marked with lifting tackle symbols (arrows).

The lifting tackle must be passed under and fixed at these points, as illustrated below, when lifting the crate.

Use ropes or poles to steady and manoeuvre loads. Do not use hands or feet.

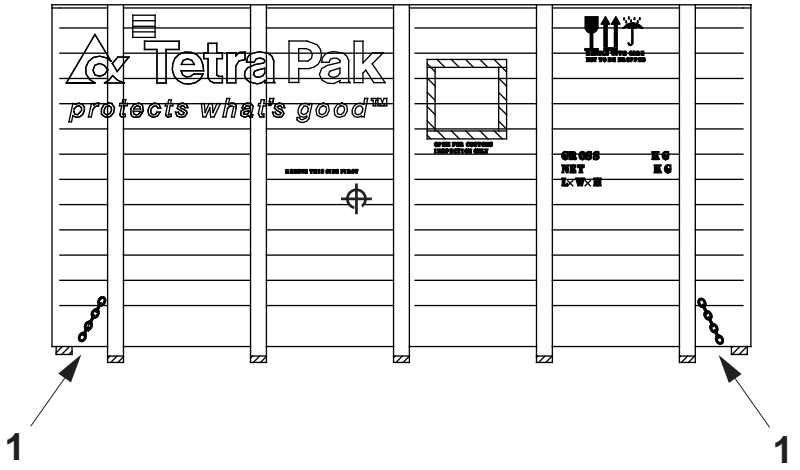

1 Lifting tackle

TechPub_2614345_0110 - TeM_3284672-0101.fm

Moving Crates

a) Lift the crate. Lift only enough to clear the floor.

b) Make sure that the crate remains stable on the lifting equipment.

CAUTION
Move the crate slowly and gently.

c) Move the crate to its destination.

d) Look through the customs inspection panel to see in what way the contents are facing. Position the crate to face the most convenient direction.

e) Lower the crate gently to the floor, leaving enough room around it for easy access to all sides.

f) Make sure that the crate is firmly supported. Put blocks or plates under it if necessary.

g) Remove the lifting equipment.

TechPub_2614345_0110 - TeM_3284672-0101.fm

Unpacking and Inspection

DANGER

Crushing hazard!
Moving heavy loads.

To avoid risk of damage, the crates containing the equipment must be opened and unpacked in the presence of a Tetra Pak representative.

The minimum unpacking area must be at least twice the size of the crate.

Before opening the crate:

- Examine the outside of the crate and record and document any damage. This information must later be recorded on the Transport Damage Report (a section of the Start-up machine Quality report).
- Record and document the readings of the humidity indicators and the tipping indicators attached to the outside of the crate (if present). This information must later be recorded on the Transport Damage Report

The crate should be opened according to the instruction of the "Box Opening Instructions" (1) attached to the crate.

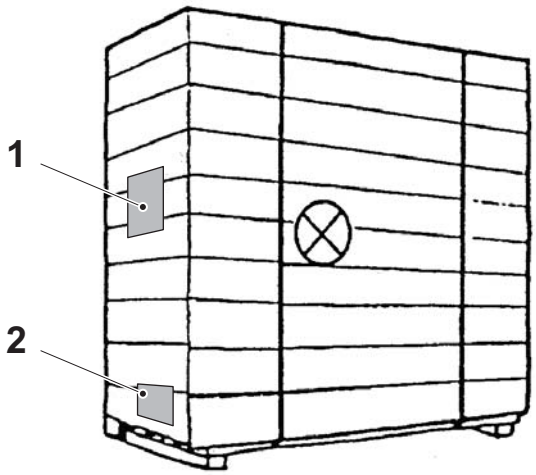

1 Box opening instructions
2 Packing list

Note! Please note the importance of documenting any damage as shown in this procedure, and to halt the unpacking and contact Tetra Pak in such an event.

(Cont'd)

TechPub_2614345_0110 - TeM_3284672-0101.fm

(Cont'd)

After the crate has been opened according to this instruction:

- Unpack the remaining equipment from the bottom panel of the crate.
- Check each separate item of the delivered equipment against the packing list (2) attached to the crate.
- Report any damage or missing items to Tetra Pak immediately.
- Dismantle and safely dispose of the equipment crates:
  - Re-usable packaging materials and structures should be collected and reused in accordance with local regulations.
  - Non re-usable packaging materials and structures should be collected and disposed of in accordance with local regulations.

TechPub_2614345_0110 - TeM_3284672-0101.fm

Lifting and Transporting

DANGER

Crushing hazard!

Check the centre of gravity. Lift only under the base frame. Lift with as wide lifting points as possible. Lift not higher then necessary, keep it as close to the ground as possible.

Using Forklift

To make a safe lift and transport of the module it is important that the lift is only done under the base frame with as wide lifting points as possible to get a good balanced lift.

The lift is done by one or two fork lifts or two or more pallet un-loader.

Using Strings

Yokes must be used to avoid damages to the stainless steel covers.

Using Strops

See the Installation drawing for the correct point for fastening the strops



Attach the strops only to the eye bolts if applicable.

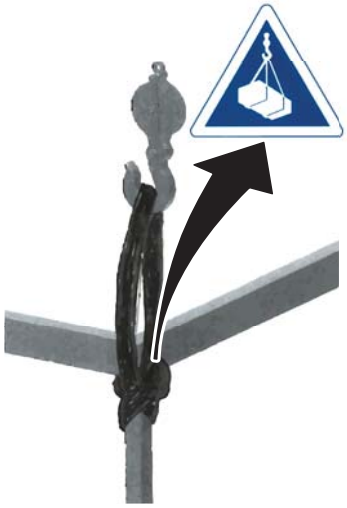

Attach the strops only where the signs are placed on the frame.



CAUTION

Risk of damage to the equipment.

Using lifting positions other than shown and careless handling when lifting the feed module can severely damage the machine frame.

TechPub_2614345_0110 - TeM_3284672-0101.fm

Centre of Gravity

DANGER

Crushing hazard!

The modules can have a critical stability problem when lifting and transporting it.

There are many sizes of the modules included in a delivery. In the side and length view the centre of gravity can deviate horizontally from the centre line.

The horizontal deviation can cause a stability problem if the modules high and the weight is unevenly distributed.

Positioning

Before positioning any equipment make sure that the floor is of adequate quality:

- concrete composition and floor construction are determined by local ground conditions.
- surface flat and reasonably smooth.

For an efficient erection always use the **INSTALLATION LAYOUT** and **FLOW DIAGRAM**, see the Technical Manual (TeM).

The installation layout shows:

- the **load points** on all included modules.
- the **weight** on all included modules.
- the necessary **area** required for a correct installation of the equipment.
- the location and dimension of the **connection points** for all the utilities.
- the **lifting point**s on the main module when using strop.

Using Forklift

To make a safe lift and transport of the module it is important that the lift is only done under the base frame with as wide lifting points as possible to get a good balanced lift.

The lift is done by one or two fork lifts or two or more pallet un-loader.

Using Strings

Yokes must be used to avoid damages to the stainless steel covers.

Using Strops

See the Installation drawing for the correct lift points

CAUTION

Risk of damage to the equipment.

Using lifting positions other than shown and careless handling when lifting the feed module can severely damage the machine frame.

TechPub_2614345_0110 - TeM_3284672-0101.fm

Positioning the Included Process Modules

When positioning the modules:

  – Using forklift; lift under the bottom frame.

  – Using strings; yokes must be used to avoid damage to the stainless steel covers.

- Position the BASE MODULE with the control panel.

Note! For control panel not mounted on module frame more detailed instructions on page 1-22

- Position the HEAT EXCHANGER.

Note! For heat exchangers more detailed instructions on page 1-23

- Position the HOMOGENISER.

  – Follow the instruction given in the homogeniser instruction manual.

- Position the DEAERATOR. (optional).

Note! For deaerator more detailed instructions on page 1-32

- Positioning the S-vessel Direct Heat Module (DHM)

Note! For S-vessel more detailed instructions on page 1-28

- Positioning the F-vessel Direct Heat Module (DHM)

Note! For F-vessel more detailed instructions on page 1-30

- Install all INTERCONNECTING PIPES between the process modules. All pipes are clearly marked.
- Connect STEAM, WATER and INSTRUMENT AIR supplies.
- Connect DRAINS**.**
- Connect PRODUCT PIPES, input and output.
- Connect WATER OUTLET**.**
- Connect internal PNEUMATIC HOSES**.**
- Connect PROBES and SENSORS**.**
- Connect ELECTRICITY to pumps and control cabinet.

Note! The electric supply cables are **not** delivered by Tetra Pak.

- Connect homogeniser IN AND OUTLET PIPES, STEAM SUPPLY (if aseptic version) WATER and ELECTRICITY**.**
- Connect PUMPS for concentrated cleaning solutions.

Note! This equipment must be located well apart from the process area. Connections to be made of: acid proof stainless steel or acid proof plastic protected and supported by steel tubing.

TechPub_2614345_0110 - TeM_3284672-0101.fm

Levelling

Every unit has at least four machine feet (1). Use these to level the unit.

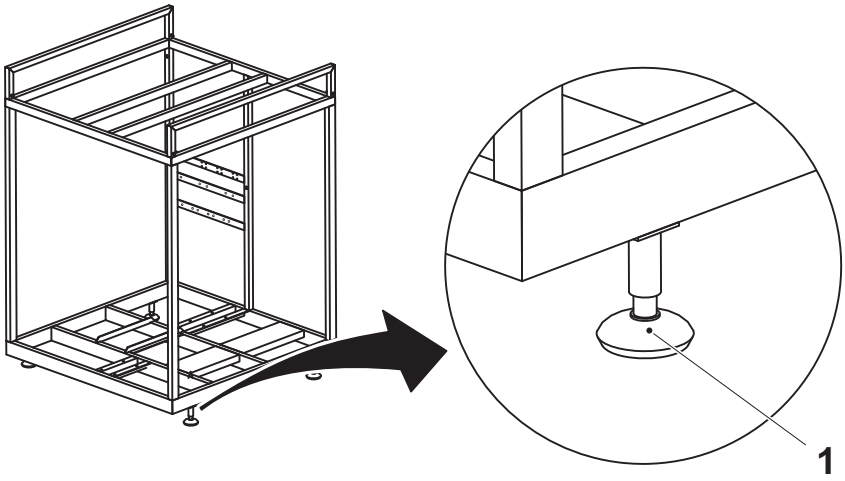

A = Min. 125 mm
B = Max. 169 mm

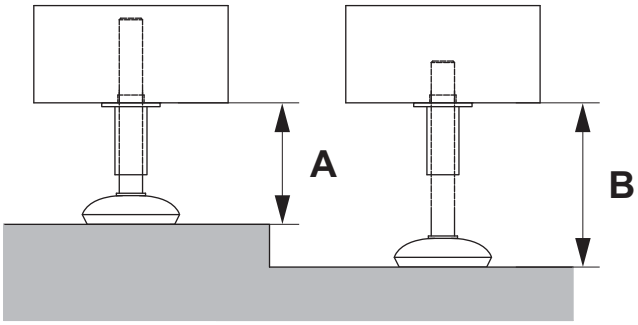

1 Machine foot

TechPub_2614345_0110 - TeM_3284672-0101.fm

Positioning Control Panel

a) Fit the eye bolts in the four lifting points on the control panel roof.

b) Attach the lifting tool as shown below so that the longer chains/straps are connected to the lifting points A (rear side), and the shorter chains/starps are in the lifting point B (front side).

c) Lift only enough to clear the crate.

d) Manoeuvre the electrical panel out of the crate and to its position.

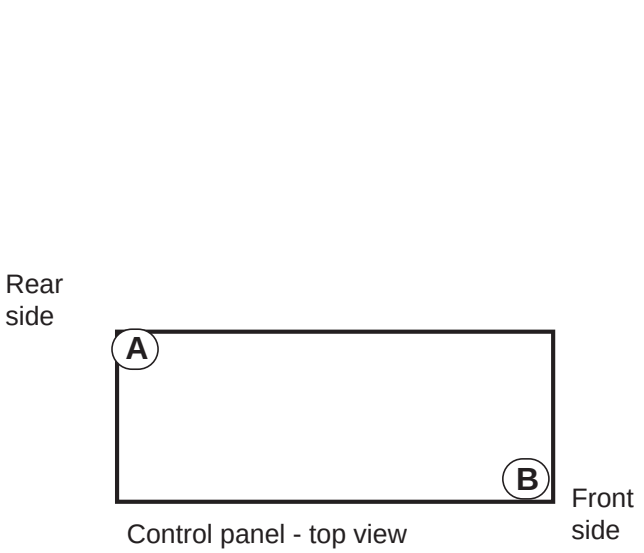

Control panel - top view

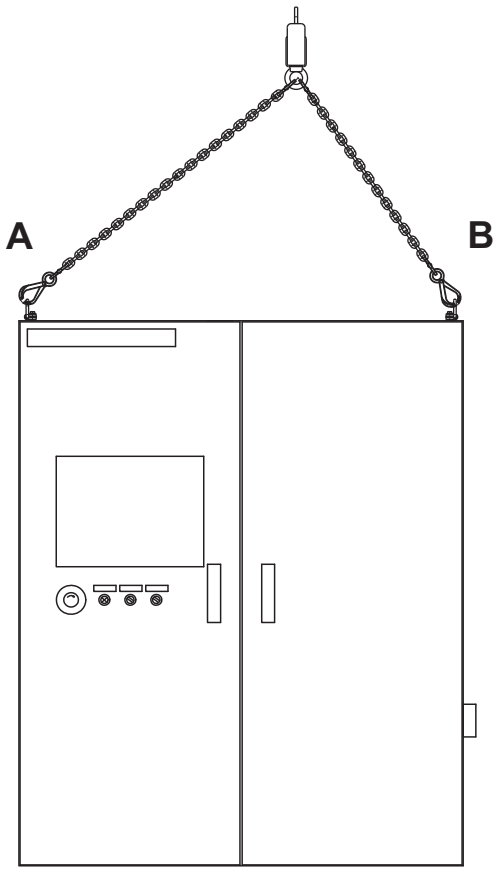

Control panel - front view

TechPub_2614345_0110 - TeM_3284672-0101.fm

Positioning and Erection of Heat Exchangers

Tubular Heat Exchanger

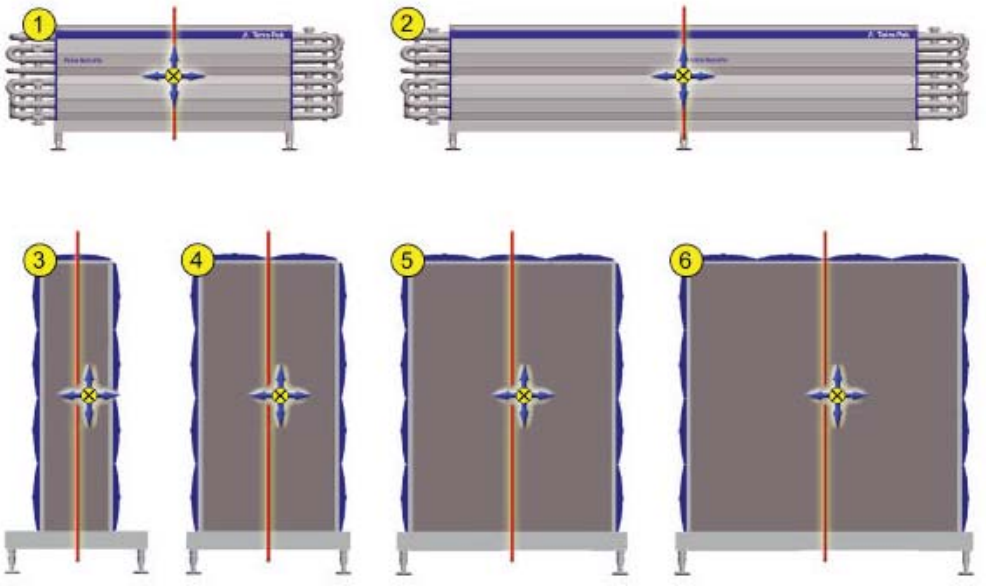

Figure shows centre of gravity.

TechPub_2614345_0110 - TeM_3284672-0101.fm

Centre of Gravity

There are two length of the heat exchanger 3 m [1] and 6 m [2]. In the side views [1 & 2] the centre of gravity [x] can slightly deviate horizontally from the centre line. The horizontal deviation in the side views are considered insignificant when lifting and transporting the heat exchanger.

There are four heights of the heat exchanger 486 mm, 906 mm, 1326 mm and 1746 mm plus 270 mm for the base frame ±20 mm for the feet. In the views [1 & 6] the centre of gravity [x] can deviate in height from the centre line.

There are four widths of the heat exchanger 904 mm, 1030 mm, 1450 mm and 1880 mm. In the front views [3 - 6] the centre of gravity [x] can deviate horizontally from the centre line.

The horizontal deviation in the front views can cause a stability problem if the heat exchanger is high and the weight is unevenly distributed.

When the height is at the maximum and the width is at the minimum and the weight are unevenly distributed the stability problem is critical when lifting and transporting the heat exchanger.

DANGER

Crushing hazard!

The modules can have a critical stability problem when lifting and transporting it.

Lifting and Transporting

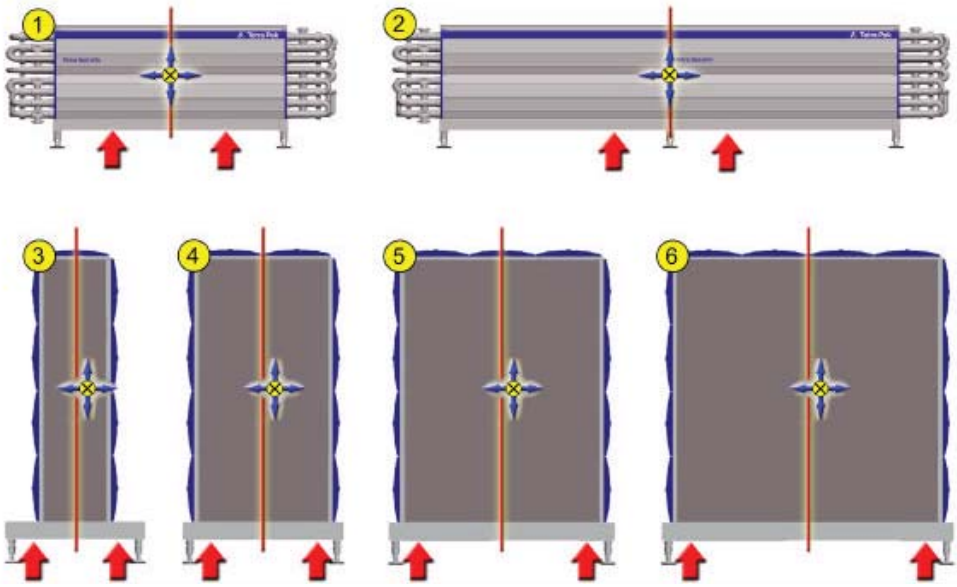

Figure shows lifting points.

Check the centre of gravity of the heat exchanger before lifting.

To make a safe lift and transport of the heat exchanger it is important that the lift is only done under the base frame with as wide lifting points as possible to get a good balanced lift.

Lifting points are market with read arrows in the figure above.

The lift is done by one or two fork lifts or two or more pallet un-loader.

Every lifting point must be supported with a wheel right under the lifting point.

DANGER

Crushing hazard.

Check the centre of gravity before lifting. Lift only under the base frame. Lift with as wide lifting points as possible. Lift not higher then necessary, keep it as close to the ground as possible.

TechPub_2614345_0110 - TeM_3284672-0101.fm

Positioning



Figure shows positioning.

The fork lift should have 1.5 m distance between the forks. Set the forks under the centre of the gravity [1] to get a safe and controlled lift. Carefully lift the heat exchanger in to position [3] in the machine line.

DANGER

Crushing hazard.

Moving heavy loads. Lift only under the base frame.

TechPub_2614345_0110 - TeM_3284672-0101.fm



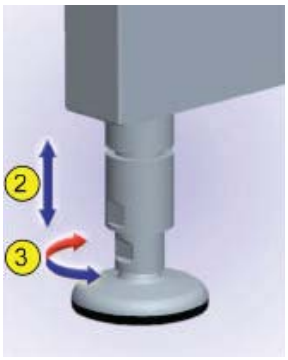

Horizontal Alignment

- Level the base frame by measuring it with a water level in all directions [1] in all parts of the base frame.
- Adjust [3] the height [2] of the feet on the base frame until it is in horizontal level.



Connecting the Heat Exchanger

Connect the pipe-work to the heat exchanger [1] according to the specification for the machine line.

TechPub_2614345_0110 - TeM_3284672-0101.fm

Plate Heat Exchanger

Straps should be used when lifting, place straps according to the pictures

WARNING

Never lift by the connections or the studs around them

Centre of gravity is marked on the sides of the case.
The actual centre of gravity is located directly below this mark.

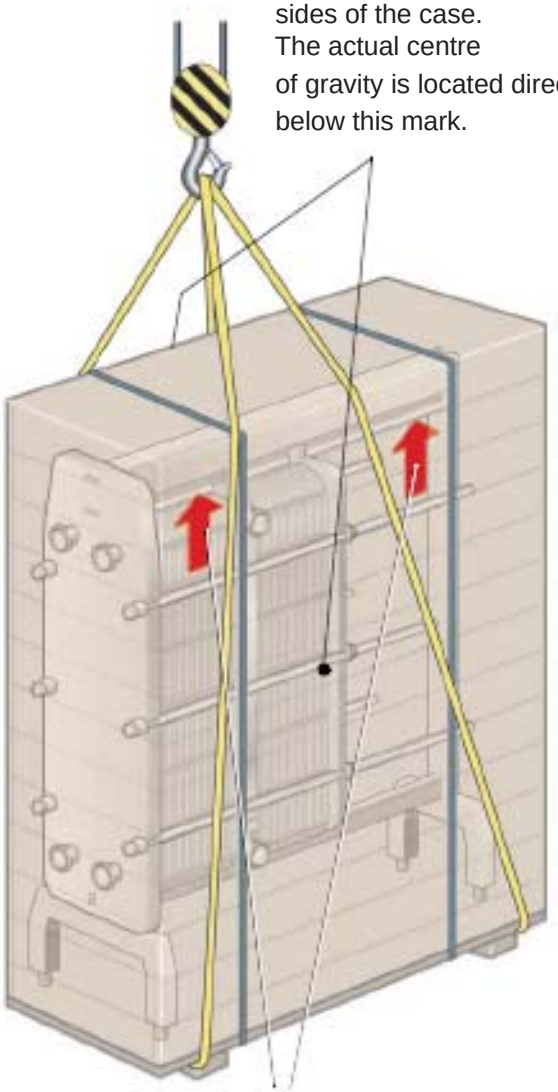

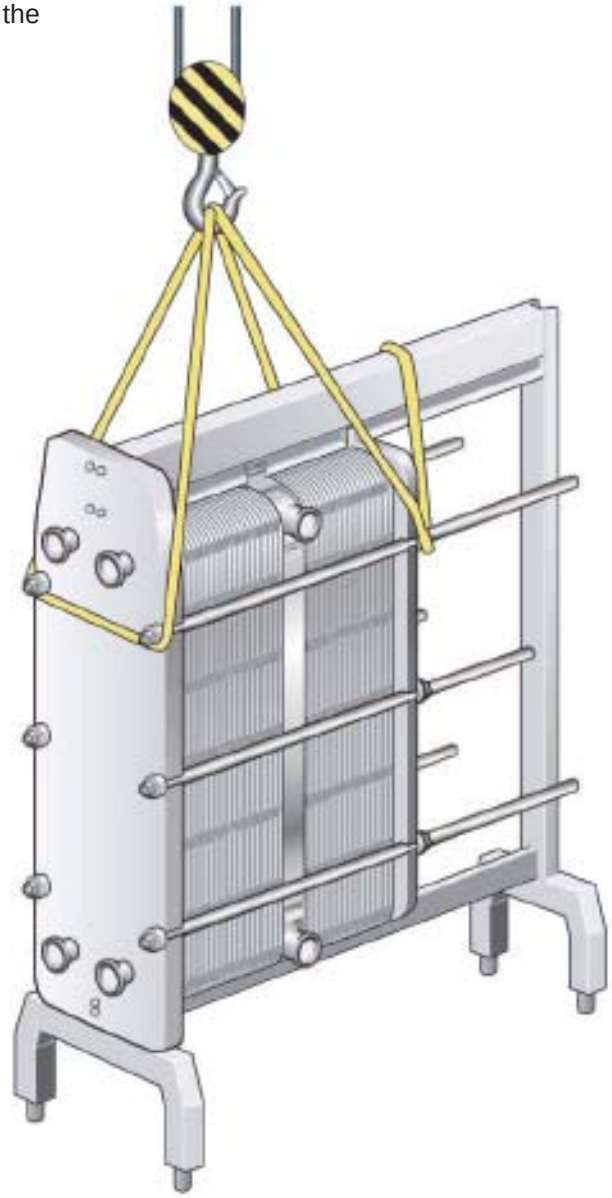

Lifting hooks¨

Observe the markings on the case indicating where to place lifting hooks

TechPub_2614345_0110 - TeM_3284672-0101.fm

Positioning and Erection of the S-vessel Direct Heat Module (DHM)

Use two independent lifting devices such as mobile cranes, overhead hoists etc. Make sure that the lifting devices are designed to lift the necessary weight.

Before raising the vessel:

- Make sure that the pump M305 is secured with straps.
- Make sure the all bolts between vessel and the frame are tighten to avoid damage during the positioning.

Raising the vessel (figure 1):

1) Connect the lifting sling to the lifting lugs (A) on the side of the vessel using shackles.
2) Connect to the first lifting device (B).
3) Loop a lifting sling around the frame (C) If necessary protect the frame with a piece of rubber sheeting or similar material to avoid scratching the surface.
4) Connect to the second lifting device (D).

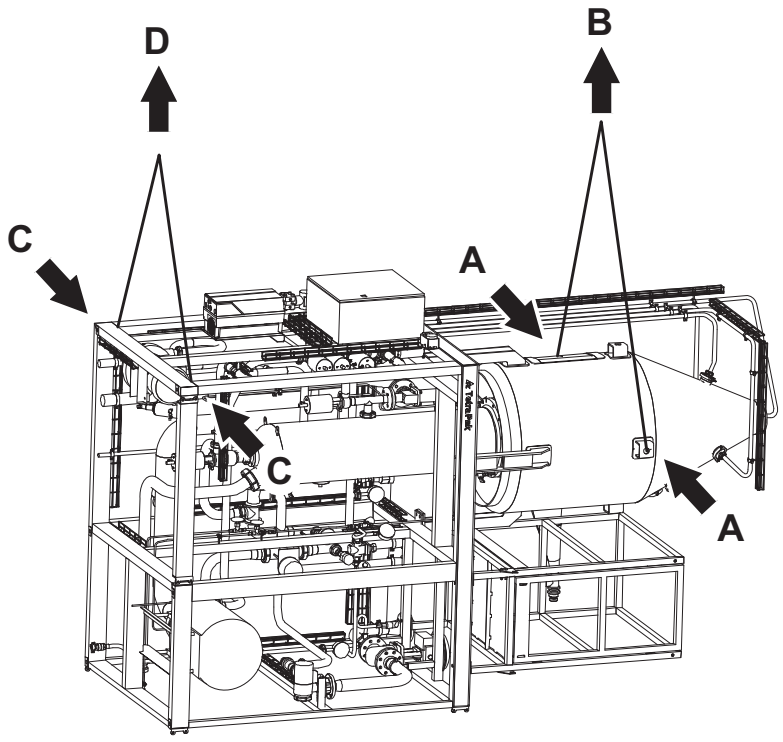

Figure 1.

(Cont'd).

TechPub_2614345_0110 - TeM_3284672-0101.fm

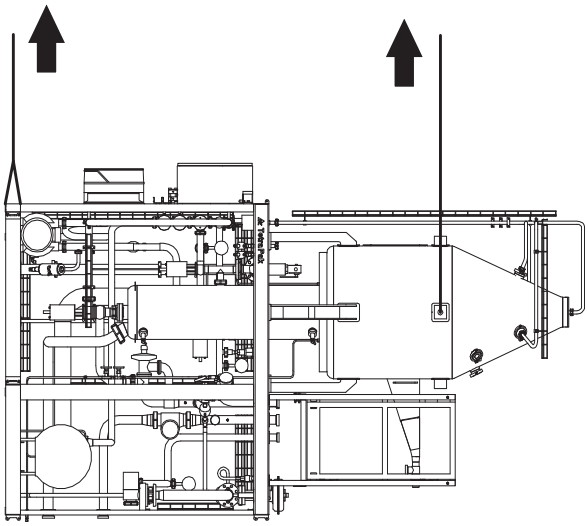

Figure 2.

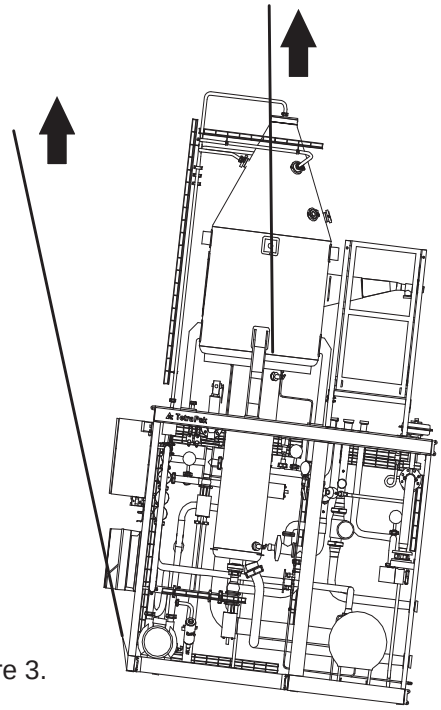

Figure 3.

5) Lift simultaneously until the bottom of the crate is free and remove the bottom of the crate (figure 2).
6) Erect the complete S-vessel DHM module until the vessel is hanging freely/vertically (figure 3).
7) Assemble the machine feets (E) to the frame (figure 4).
8) Lower the complete S-vessel DHM module to the floor.
9) Disconnect lifting devices.

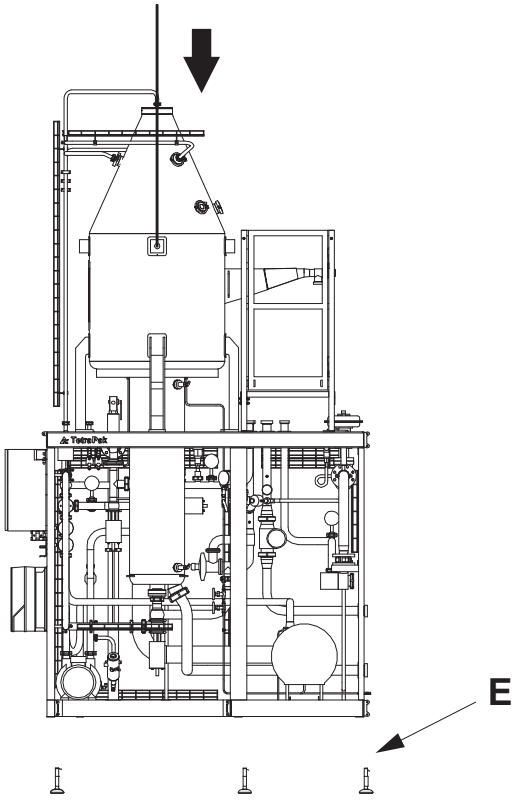

Figure 4.

TechPub_2614345_0110 - TeM_3284672-0101.fm

Positioning and Erection of the F-vessel Direct Heat Module (DHM)

Use two independent lifting devices such as mobile cranes, overhead hoists etc. Make sure that the lifting devices are designed to lift the necessary weight..

Before raising the vessel:

- Remove pump M5 before raising the vessel.
- Check that the bolts between vessel and frame are tighten

Raising the vessel (figure 1):

1) Connect the lifting gear to the two lifting rings (A) on the top of the vessel using shackles.
2) Connect to the first lifting device (B).
3) Loop a lifting gear around the frame (C) as shown. If necessary protect the legs with a piece of rubber sheeting or similar material to avoid scratching the surface.
4) Connect to the second lifting device (D).
5) Lift simultaneously until the bottom of the crate is free, remove the crate (E).

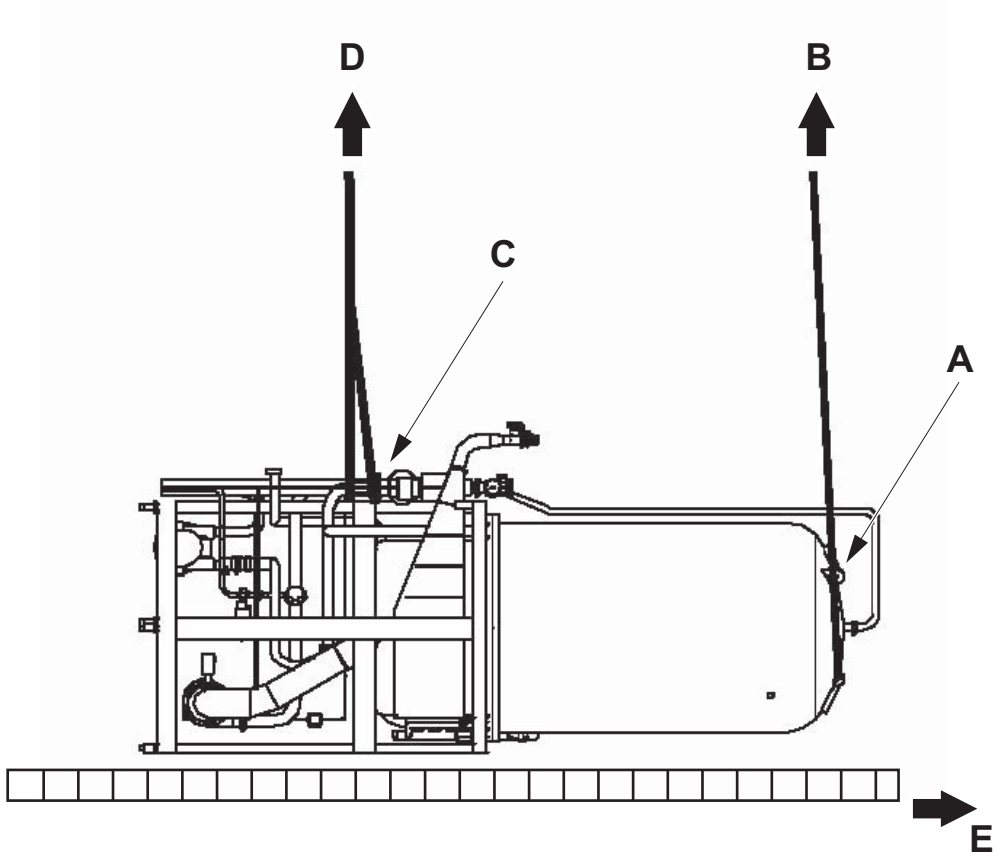

Figure 1.

(Cont'd)

TechPub_2614345_0110 - TeM_3284672-0101.fm

(Cont'd)

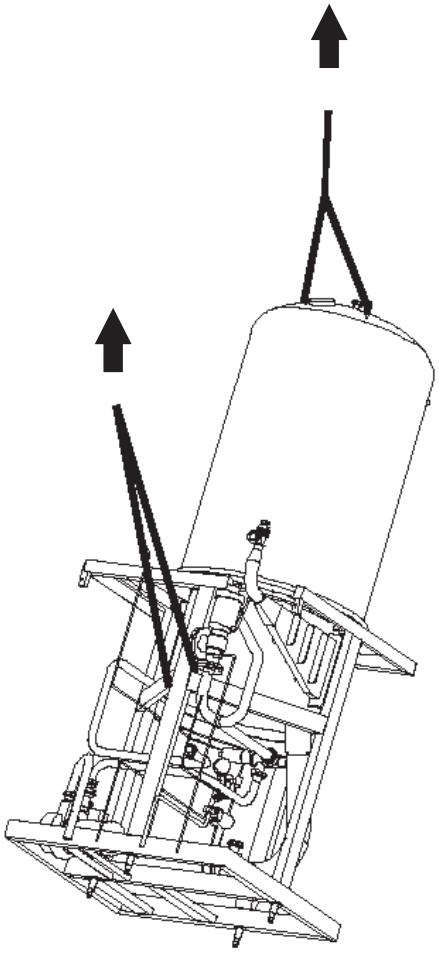

Figure 2

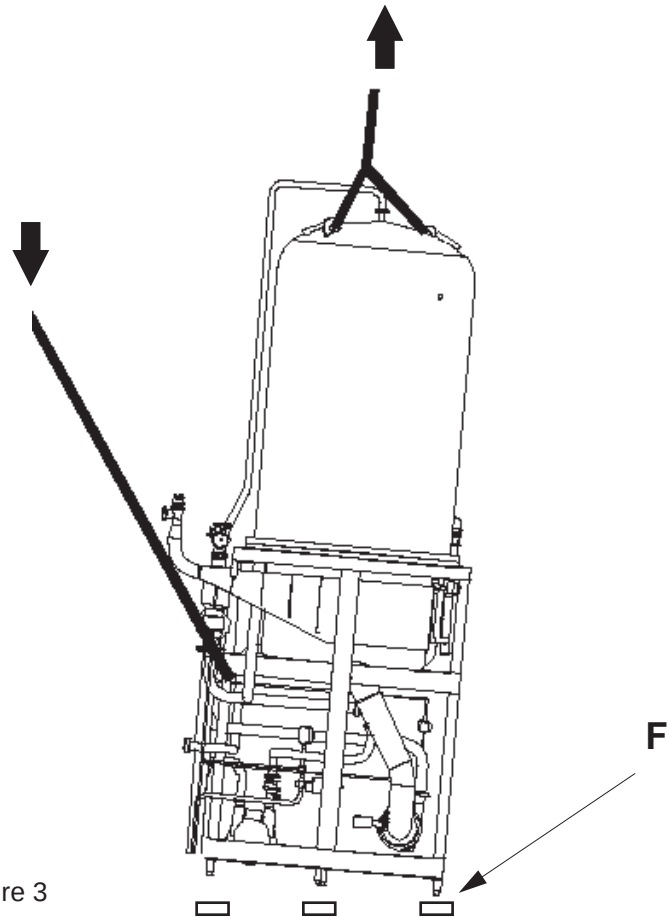

Figure 3

6) Erect the complete F-vessel DHM module until the vessel is hanging freely/vertically (figure 2).
7) Lower the vessel bottom until the complete F-vessel DHM module is hanging freely/vertically, ensure that the legs do not drag along the floor.
8) Align the footplates (F) under the frame and place the vessel.
9) Disconnect lifting devices.

TechPub_2614345_0110 - TeM_3284672-0101.fm

Positioning and Erection of Deaerator

Before positioning any equipment make sure that the floor is of adequate quality:

- concrete composition and floor construction are determined by local ground conditions
- surface flat and reasonably smooth
- enough space above the vessel, for manoeuvring the condenser with the lifting equipment. A permanent hook with lifting equipment is to prefer.

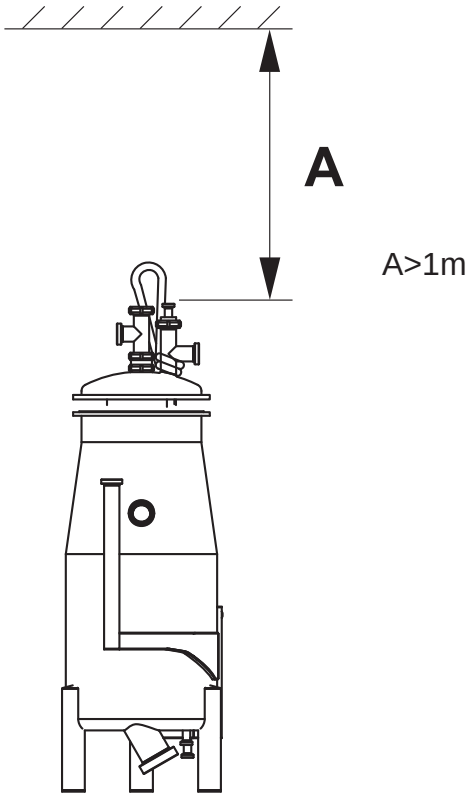

For efficient erection always use the assembly drawing and flow diagrams.

TechPub_2614345_0110 - TeM_3284672-0101.fm

Raise the Vessel to an Upright Position

Use two independent lifting devices such as mobile cranes, overhead hoists e.t.c.

Vessel type A
Place the lifting strops on two of the legs (1) as close to vessels bottom as possible, connect two shackles with lifting strops in the two lifting lugs (2) .

Vessel type B
Connect two shackles with lifting strops in two of the legs (3) and in the two lifting lugs (2).

a) Lift simultaneously at the top and the bottom to height that ensure an erection without legs dragging along the floor.

b) Lift the top until the vessel is almost vertical. At the same time move the second lifting device towards the first.

c) Lower the vessel bottom until the tank is hanging freely/vertically.

d) Lower the tank until it rests on the floor. Disconnect lifting strops on the legs.

e) Lift the vessel vertically to its position in the frame. Fasten the vessel with bolts.

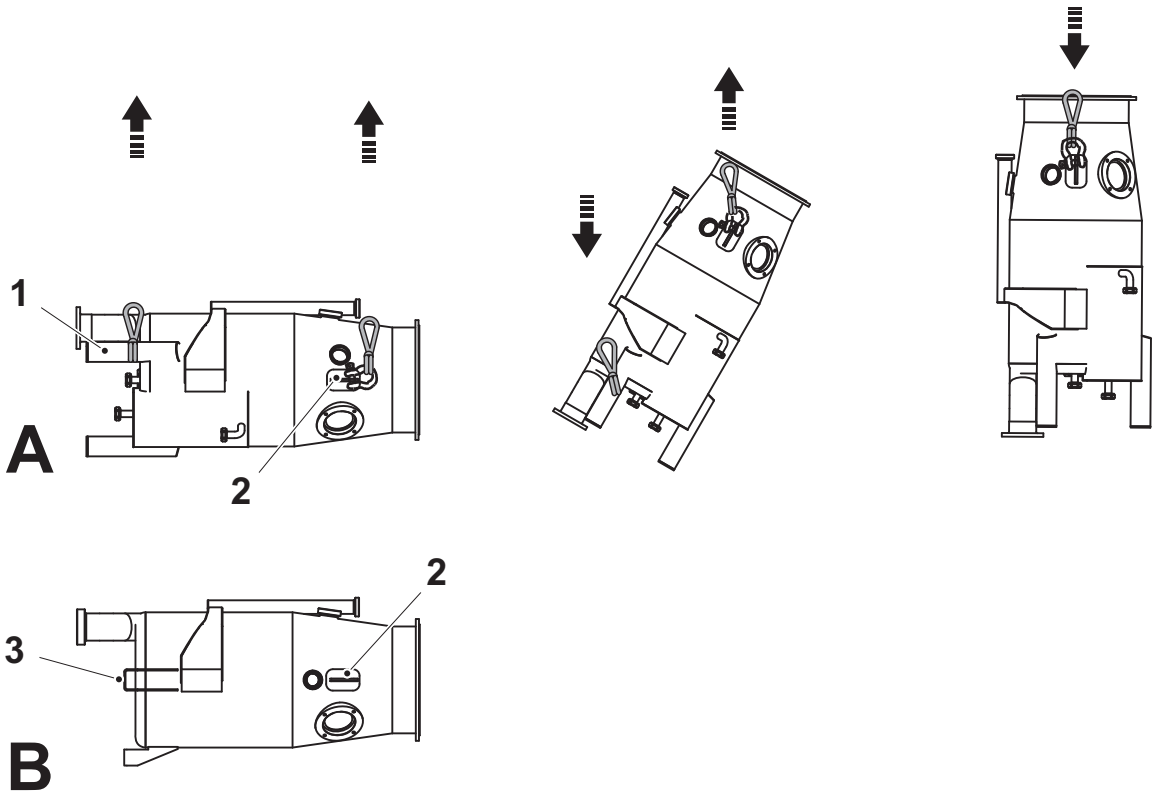

TechPub_2614345_0110 - TeM_3284672-0101.fm

Lifting and Mounting the Condenser

a) Place the lifting strap as shown in figure below.

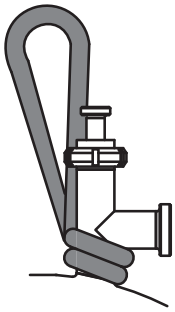

b) Lift and place the condenser at top. The unit can be rotated to an arbitrary position (12 bolt holes).

c) Mount the unit.

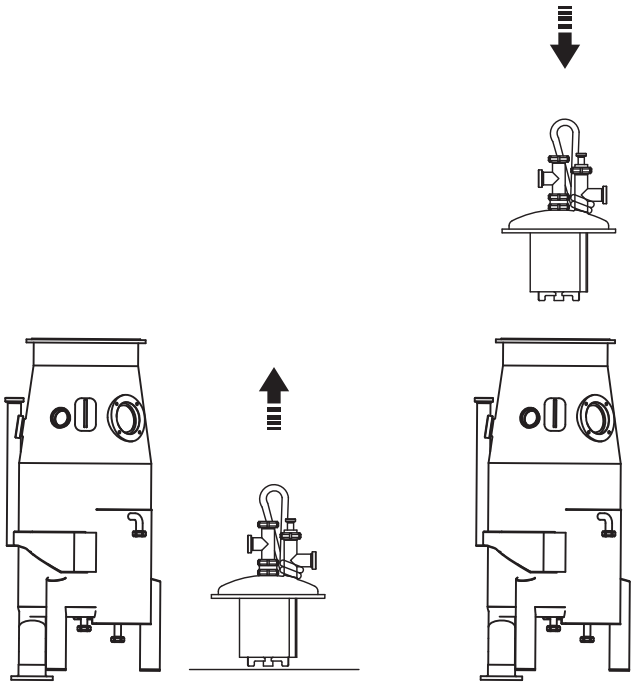

TechPub_2614345_0110 - TeM_3284672-0101.fm

Check After Installation

Checks to be Made

To ensure proper installation the following checks must be made:

External utility

Check that all connections are in accordance with the requirements set out in the Technical data and the Installation layout.

Flush through new piping to ensure that debris etc. not will enter and block valves etc.

Pressurize

Pressurize the system to ensure that there are no leakages (water, air, steam).

Pumps and motors

- Check all motor connections, overload protections, fuses, rated current and voltage.
- Ensure correct pump rotation directions by a brief start - stop.
  If required, detach pump housing.

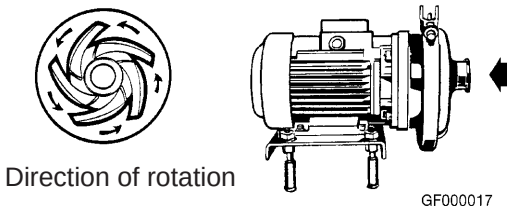

Valves

- Check appropriate function
  (normally open/closed)
- Activate/deactivate from solenoid valve and check opening and closing motion.

Instruments - Probes

- Check reading on instrument and display.

Control Valves

- Check appropriate function.
- Open/close by manual operation of controllers.

WARNING

Risk of serious injury and equipment damage.

Safety in the assembly will be jeopardized if any media pressure or media temperature exceeds the specification stated in Connection Data.

TechPub_2614345_0110 - TeM_3284672-0101.fm

When to Start Commissioning

Check list to be considered before ordering/commencing commissioning	
	Notes
Site	
Floor preparation completed	
Foundations completed (if applicable)	
Ventilation work completed (if applicable)	
Insulation work completed (if applicable)	
Doorways and passages checked	
Services	
Water connected and available (if applicable)	
Steam connected and available (if applicable)	
Coolant connected and available (if applicable)	
Electricity connected and available (if applicable)	
Compressed air connected and available (if applicable)	
Floor drains	
Drain work completed	
Installation	
All equipment positioned and connected	
Checks described in ‘Check after installation’ completed	
Up- and down-stream equipment connected	
Product	
Product is available	
Personnel	
Operator available	
Utility welder and erector available	
TIG welder available	
Electrician available	

TechPub_2614345_0110 - TeM_3284672-0101.fm

Commissioning

General

Due to the complexity of the equipment, the Tetra Pak commissioner should have good experience for this type of work.

During commissioning, concerned operators and technicians should be available in order to assist the commissioner and to learn how to work with the equipment.

Note! Instructions for commissioning are available in English and will be sent to commissioner by request from MC.

Commissioning Documents

Commissioning documents are available at the market company.

Commissioning Kit

As a preparation for an efficient commissioning a “Commissioning kit” is included for several pieces of processing equipment. It contains a selection of parts carefully chosen to avoid interruptions during commissioning.

The commissioning kit shall not be considered as spare parts and used items will not be replaced.

TechPub_2614345_0110 - TeM_3284672-0101.fm

De-Commissioning

General

After dismantling, used machinery will have to be disposed of according to local laws and international agreements.

TechPub_2614345_0110 - TeM_3284672-0101.fm

Maintenance

TechPub_2614345_0106 - TeM_1210835_0101.fm

This page intentionally left blank

TechPub_2614345_0106 - TeM_1210835_0101.fm

Introduction . . . . . 1 - 5

Requirements on Personnel . . . . . 1 - 5

Preventive Maintenance Recommendations . . 1 - 6

Spare Parts . . . . . 1 - 7

TechPub_2614345_0106 - TeM_1210835_0101.fm

This page intentionally left blank

TechPub_2614345_0106 - TeM_1210835_0101.fm

Introduction

To ensure maximum safety always read the section **“Safety precautions”** before doing any work on the machine or making any adjustments

Requirements on Personnel

Mechanic

Skilled mechanic with at least two years experience of industrial maintenance. Proven skill in reading engineering drawings.

Electrician

Certified according to local regulations with at least 3 years’ experience of similar types of installations. Proven skills in reading and working from drawings and cable lists. Knowledge of local safety regulations for power and automation. Furthermore the electrician must ensure that the electrical installation, including the equipment or device that work has been carried out on, has been adequately checked regarding the safety of personnel and property before it is put into operation.

CAUTION

Unauthorized personnel.

Operation by unauthorized personnel may endanger personnel and property.

TechPub_2614345_0106 - TeM_1210835_0101.fm

Preventive Maintenance Recommendations

To help you maintain your equipment in good running order the “Preventive maintenance recommendations” specifies:

- activities (what to do)
- service interval (when to do)
- spare parts (what to change)

and refers to the instructions in the relevant Maintenance & Spare Parts documents in the chapter “Components Instructions”.

TechPub_2614345_0106 - TeM_1210835_0101.fm

Spare Parts

Tetra Pak can deliver spare parts and spare parts kits for your specific equipment.

All spare parts and spare part kits unique to your equipment, and available for ordering from Tetra Pak, are designated in a “Spare parts list”.

Note! If spare parts have been ordered, the list “Spare parts kit” appears on the List of document and will tagged together with the “Spare part list”.

TechPub_2614345_0106 - TeM_1210835_0101.fm

This page intentionally left blank

TechPub_2614345_0106 - TeM_1210835_0101.fm

Tetra Pak Dairy & Beverage Systems AB

Preventive maintenance recommendations.

Tetra Therm Aseptic VTIS

Machine No: T5844130774

Ver:

Date: 2016-12-28

Label	Material No.	Denomination	Type	Doc No. Reference	Interval (hr)	Action	Description	Sparepart No.	Denomination	Qty	Action performed Date / Result
	1 - Product Safety										
	2 - Operational Safety										
	3 - Product Quality										
	4 - Utility										
	5 - Product Routing										
	6 - Product Measurement										
	Undefined										
Mach sign CE	359705-0018	Warning Sign ISO, Hot Cor.Subst.U H P		3284690-0101	3000	Check	Safety sign	359705-0018	Warning Sign ISO, Hot Cor.Subst.U H P	1	
CR44	90511-6240	Steam trap	DN25 FT43-10TV PN16 Flanged	1225994-0101	6000	Change	Spare part kit	90520-0401	Spare part kit	1	
_	MS10_PL_EPDMFF	PHE-plates	Plex M10 EPDMFF	1220922-0101	6000	Change	Spare part	6-39005 6162 6	Spare part	252	
_	MS10_SECEPDMFF	PHE-sections	Plex M10 EPDMFF	1220922-0101	6000	Check	Test PHE integrity			2	
SMS 63	6-31317 0379 3	Seal ring	SMS63.5 63.5/73.5x5.5 AL113 3025-86 EPDM	No doc.	6000	Change	Spare part			1	
SMS 76	6-31317 0380 3	Seal ring	SMS76.1 76.1/86.0x5.5 AL113 3025-86 EPDM	No doc.	6000	Change	Spare part			1	
M2	6-9613 39 4851	Centrifugal pump	LKH-40/235-SSS-SMS-15.0kW-EPDM is C/SiC 50Hz 230D/400-415Y ABB IE3	1214246-0101	6000	Change	Spare parts kit	6-9611 92 2130	Spare part kit	1	
M4	6-9613 39 4879	Centrifugal pump	LKH-25/205-DMS-SMS-11.0kW-EPDM is C/SiC 50Hz 230D/400-415Y ABB IE3	1214246-0101	6000	Change	Spare parts kit	6-9611 92 2226	Spare part kit	1	
M10	6-9613 39 4961	Centrifugal pump	LKH-20/165-DMS-SMS-7.5kW-EPDM is C/SiC 50Hz 230D/400-415Y ABB IE3	1214246-0101	6000	Change	Spare parts kit	6-9611 92 2218	Spare part kit	1	
M305	6-9613 39 4972	Centrifugal pump	LKH-25/205-DMS-SMS-15.0kW-EPDM is C/SiC 50Hz 230D/400-415Y ABB IE3	1214246-0101	6000	Change	Spare parts kit	6-9611 92 2226	Spare part kit	1	
M308	6-9613 39 4968	Centrifugal pump	LKH-50/190-DMS-SMS-15.0kW-EPDM C/SiC 50Hz 230D/400-415Y ABB IE3	1214246-0101	6000	Change	Spare parts kit	6-9611 92 2234	Spare part kit	1	
M311	90513-4600	Vacuum pump	LEMB 161 8Z AA1 4B 0 1C 5/6kW 50/60Hz 400/690-460V	1229146-0101	12000	Check	Pump			1	
M311	90513-4600	Vacuum pump	LEMB 161 8Z AA1 4B 0 1C 5/6kW 50/60Hz 400/690-460V	1229146-0101	24000	Change	Service kit, pump	90511-5099	Spare part kit	1	
M311	90513-4600	Vacuum pump	LEMB 161 8Z AA1 4B 0 1C 5/6kW 50/60Hz 400/690-460V	1229146-0101	12000	Change	Service kit, pump	90512-5218	Service kit, pump	1	
V74	6-9612 65 0173	Constant pressure valve	CPMI-2-W-51-Kvs 23 EPDM PTFE//	1214498-0101	6000	Change	Spare part (Lower diaph.EPDM PTFE)	6-9612 30 6601	Lower diaphragm	1	
V74	6-9612 65 0173	Constant pressure valve	CPMI-2-W-51-Kvs 23 EPDM PTFE//	1214498-0101	6000	Change	Spare part (O-ring NBR)	6-223406 49	O-ring	1	
V74	6-9612 65 0173	Constant pressure valve	CPMI-2-W-51-Kvs 23 EPDM PTFE//	1214498-0101	6000	Change	Spare part (Upper diaph.EPDM PTFE)	6-31356 0014 4	Diaphragm	1	
V362	6-9612 65 0299	Constant pressure valve	CPMI-D60-W-76-Kv60 316L PTFE/EPDM	1241266-0101	6000	Change	Spare parts kit	6-9611 92 0119	Service kit	1	
V362	6-9612 65 0299	Constant pressure valve	CPMI-D60-W-76-Kv60 316L PTFE/EPDM	1241266-0101	6000	Change	Spare parts	6-31317 0378 2	Seal ring	1	
V78	6-32422 0320 1	Expansion valve	AISI 316 APC W ISO 63.5 Kvs=22 Acc. to drawing:32422-0320 Rev.07	1215611-0101	6000	Change	Diaphragm set	6-9611 92 0001	Diaphragm set	2	
V78	6-32422 0320 1	Expansion valve	AISI 316 APC W ISO 63.5 Kvs=22 Acc. to drawing:32422-0320 Rev.07	1215611-0101	6000	Change	Seal ring	6-31317 0375 3	Seal ring	1	
V330	6-32422 0302 5	Expansion valve	AISI 316 APC W ISO 51 Kvs=12	1215611-0101	6000	Change	Diaphragm set	6-9611 92 0001	Diaphragm set	2	
V330	6-32422 0302 5	Expansion valve	AISI 316 APC W ISO 51 Kvs=12	1215611-0101	6000	Check	Function			1	
V354	6-32422 0302 2	Expansion valve	AISI 316 APC W ISO 51 Kvs=7	1215611-0101	6000	Change	Diaphragm set	6-9611 92 0001	Diaphragm set	2	
V354	6-32422 0302 2	Expansion valve	AISI 316 APC W ISO 51 Kvs=7	1215611-0101	6000	Check	Function			1	
V354	6-32422 0302 2	Expansion valve	AISI 316 APC W ISO 51 Kvs=7	1215611-0101	6000	Change	Seal ring	6-31317 0375 3	Seal ring	1	
CV06	6-9612 22 0009	Non-return valve	LKC-2-W-ISO-51.0-316L EPDM	1241273-0101	6000	Change	Spare part kit	6-9611 92 4007	Spare part kit	1	
CV06	6-9612 22 0009	Non-return valve	LKC-2-W-ISO-51.0-316L EPDM	1241273-0101	6000	Change	Spare part kit	6-9611 99 1679	Spring	1	
CV07	6-9612 22 0009	Non-return valve	LKC-2-W-ISO-51.0-316L EPDM	1241273-0101	6000	Change	Spare part kit	6-9611 92 4007	Spare part kit	1	
CV07	6-9612 22 0009	Non-return valve	LKC-2-W-ISO-51.0-316L EPDM	1241273-0101	6000	Change	Spare part kit	6-9611 99 1679	Spring	1	
CV11	6-9612 22 0009	Non-return valve	LKC-2-W-ISO-51.0-316L EPDM	1241273-0101	6000	Change	Spare part kit	6-9611 92 4007	Spare part kit	1	
CV11	6-9612 22 0009	Non-return valve	LKC-2-W-ISO-51.0-316L EPDM	1241273-0101	6000	Change	Spare part kit	6-9611 99 1679	Spring	1	
CV12	6-9612 22 0009	Non-return valve	LKC-2-W-ISO-51.0-316L EPDM	1241273-0101	6000	Change	Spare part kit	6-9611 92 4007	Spare part kit	1	
CV12	6-9612 22 0009	Non-return valve	LKC-2-W-ISO-51.0-316L EPDM	1241273-0101	6000	Change	Spare part kit	6-9611 99 1679	Spring	1	
CV13	90517-2813	Non-return valve	2" Sandwich type EPDM	1224311-0101	6000	Change	Spare parts	90511-4418	Seal Kit	1	
CV66	6-9612 22 0007	Non-return valve	LKC-2-W-ISO-25.0-316L EPDM	1241273-0101	6000	Change	Spare part kit	6-9611 92 4005	Spare part kit	1	
CV66	6-9612 22 0007	Non-return valve	LKC-2-W-ISO-25.0-316L EPDM	1241273-0101	6000	Change	Spare part kit	6-9611 99 1678	Spring	1	
CV304	6-9612 22 0009	Non-return valve	LKC-2-W-ISO-51.0-316L EPDM	1241273-0101	6000	Change	Spare part kit	6-9611 92 4007	Spare part kit	1	
CV304	6-9612 22 0009	Non-return valve	LKC-2-W-ISO-51.0-316L EPDM	1241273-0101	6000	Change	Spare part kit	6-9611 99 1679	Spring	1	
CV308	6-9612 22 0009	Non-return valve	LKC-2-W-ISO-51.0-316L EPDM	1241273-0101	6000	Change	Spare part kit	6-9611 92 4007	Spare part kit	1	
CV308	6-9612 22 0009	Non-return valve	LKC-2-W-ISO-51.0-316L EPDM	1241273-0101	6000	Change	Spare part kit	6-9611 99 1679	Spring	1	
V08	90513-3806	Regulating valve	3347/3372/6109 W51 NO SS/SS Kvs25 PN16 Cast body	1224799-0101	6000	Check	Function			1	
V08	90513-3806	Regulating valve	3347/3372/6109 W51 NO SS/SS Kvs25 PN16 Cast body	1224799-0101	18000	Change	Spare part kit (Actuator)	6-990418 58	Spare part kit	1	
V08	90513-3806	Regulating valve	3347/3372/6109 W51 NO SS/SS Kvs25 PN16 Cast body	1224799-0101	12000	Change	Spare part kit (Wet end)	6-990425 35	Spare part kit	1	

This document and its content are our exclusive property and must not be copied, reproduced, transmitted or communicated to any other party or used for purposes not expressly permitted by us

Label	Material No.	Denomination	Type	Doc No. Reference	Interval (hr)	Action	Description	Sparepart No.	Denomination	Qty	Action performed Date / Result
V68	6-31880 0235 1	Back pressure valve	Designed for 8 bar at 175 deg.C Acc.to drawing 6-31880-0235 Rev.01	1223553-0101	6000	Change	Diaphragm	6-31880 0238 1	Diaphragm	1	
MFC04	90503-8200	Constant flow valve	Flow restrictor G 1/2 REG-1200-D 0.5l/mi	1221586-0101	6000	Measure	Function			1	
MFC10	90503-8200	Constant flow valve	Flow restrictor G 1/2 REG-1200-D 0.5l/mi	1221586-0101	6000	Measure	Function			1	
MFC324	90503-8203	Constant flow valve	Flow restrictor G 1/2 REG-1203-D 3.0l/mi	1221586-0101	6000	Measure	Function			1	
V305	90522-3364	Needle valve	AT1890A DN8 Kvs=0.42 1.4404 ISO228/1-G1/4	1241004-0101	3000	Check	Function	90523-1579	Spare Part kit	1	
V308	90522-3364	Needle valve	AT1890A DN8 Kvs=0.42 1.4404 ISO228/1-G1/4	1241004-0101	3000	Check	Function	90523-1579	Spare Part kit	1	
V319	90522-3364	Needle valve	AT1890A DN8 Kvs=0.42 1.4404 ISO228/1-G1/4	1241004-0101	3000	Check	Function	90523-1579	Spare Part kit	1	
V340	90522-3364	Needle valve	AT1890A DN8 Kvs=0.42 1.4404 ISO228/1-G1/4	1241004-0101	3000	Check	Function	90523-1579	Spare Part kit	1	
V341	90522-3364	Needle valve	AT1890A DN8 Kvs=0.42 1.4404 ISO228/1-G1/4	1241004-0101	3000	Check	Function	90523-1579	Spare Part kit	1	
V346	90522-3364	Needle valve	AT1890A DN8 Kvs=0.42 1.4404 ISO228/1-G1/4	1241004-0101	3000	Check	Function	90523-1579	Spare Part kit	1	
V351	90522-3364	Needle valve	AT1890A DN8 Kvs=0.42 1.4404 ISO228/1-G1/4	1241004-0101	3000	Check	Function	90523-1579	Spare Part kit	1	
V352	90522-3364	Needle valve	AT1890A DN8 Kvs=0.42 1.4404 ISO228/1-G1/4	1241004-0101	3000	Check	Function	90523-1579	Spare Part kit	1	
PC322	90503-3362	Reducing valve	TLV DR20-2-DN20-ISO228/1-G3/4 Cast SS 0.14-2.0bar(g) Kvs=2,6	1221734-0101	3000	Check	Function			1	
PC323	90503-3362	Reducing valve	TLV DR20-2-DN20-ISO228/1-G3/4 Cast SS 0.14-2.0bar(g) Kvs=2,6	1221734-0101	3000	Check	Function			1	
V26	90513-3138	Regulating valve	8802YG/70E/8694 W DN20 NC SS/PTFE Kvs 10 SMS 3008 25,0	1226927-0101	6000	Check	Function			1	
V26	90513-3138	Regulating valve	8802YG/70E/8694 W DN20 NC SS/PTFE Kvs 10 SMS 3008 25,0	1226927-0101	6000	Change	Spare part kit	90503-5759	Spare part kit	1	
V39	90513-3131	Regulating valve	8802YG/90E/8694 W DN40 NC SS/PTFE Kvs 34 SMS 3008 38,0	1226927-0101	6000	Check	Function			1	
V39	90513-3131	Regulating valve	8802YG/90E/8694 W DN40 NC SS/PTFE Kvs 34 SMS 3008 38,0	1226927-0101	6000	Change	Spare part kit	90520-9788	Plug set	1	
V39	90513-3131	Regulating valve	8802YG/90E/8694 W DN40 NC SS/PTFE Kvs 34 SMS 3008 38,0	1226927-0101	18000	Change	Spare parts kit (Actuator)	90513-4540	Actuator	1	
V41	90513-3132	Regulating valve	8802YG/90E/8694 W DN50 NC SS/PTFE Kvs 49 SMS 3008 51,0	1226927-0101	6000	Check	Function			1	
V41	90513-3132	Regulating valve	8802YG/90E/8694 W DN50 NC SS/PTFE Kvs 49 SMS 3008 51,0	1226927-0101	6000	Change	Spare part kit	90520-9789	Plug set	1	
V41	90513-3132	Regulating valve	8802YG/90E/8694 W DN50 NC SS/PTFE Kvs 49 SMS 3008 51,0	1226927-0101	18000	Change	Spare parts kit (Actuator)	90513-4541	Actuator	1	
V44	6-31801 9423 5	Regulating valve	Samson 3321/3372 120cm2 GG DIN DN40 PN16 Kvs=25 SS/SS NC	1224796-0101	6000	Check	Function			1	
V44	6-31801 9423 5	Regulating valve	Samson 3321/3372 120cm2 GG DIN DN40 PN16 Kvs=25 SS/SS NC	1224796-0101	18000	Change	Spare part kit (Actuator)	6-990418 58	Spare part kit	1	
V44	6-31801 9423 5	Regulating valve	Samson 3321/3372 120cm2 GG DIN DN40 PN16 Kvs=25 SS/SS NC	1224796-0101	12000	Change	Spare part kit (Wet end)	6-990417 56	Spare part kit	1	
V60	6-31801 9648 5	Regulating valve	Samson 3323/3372 120cm2 GG DIN DN40 PN16 Kvs=20 SS/SS Divert.NC/A,linear	1224800-0101	6000	Check	Function			1	
V60	6-31801 9648 5	Regulating valve	Samson 3323/3372 120cm2 GG DIN DN40 PN16 Kvs=20 SS/SS Divert.NC/A,linear	1224800-0101	18000	Change	Spare part kit (Actuator)	6-990418 58	Spare part kit	1	
V60	6-31801 9648 5	Regulating valve	Samson 3323/3372 120cm2 GG DIN DN40 PN16 Kvs=20 SS/SS Divert.NC/A,linear	1224800-0101	12000	Change	Spare part kit (Wet end)	90511-0183	Spare part kit	1	
V63	90513-3139	Regulating valve	8802YG/70E/8694 W DN32 NC SS/PTFE Kvs 23 SMS 3008 38,0	1226927-0101	6000	Check	Function			1	
V63	90513-3139	Regulating valve	8802YG/70E/8694 W DN32 NC SS/PTFE Kvs 23 SMS 3008 38,0	1226927-0101	6000	Change	Spare part kit	90503-5761	Spare part kit	1	
V86	90522-3272	Regulating valve	8802GD/8694 70 Kvs 7.1 % NC EN10357-D W25.0x1.2 DN20 316L SS/SS Max. dP 16 bar(g)	1226927-0101	6000	Check	Function			1	
V86	90522-3272	Regulating valve	8802GD/8694 70 Kvs 7.1 % NC EN10357-D W25.0x1.2 DN20 316L SS/SS Max. dP 16 bar(g)	1226927-0101	12000	Change	Spare part kit (Actuator)	90518-8548	Packing gland seals	1	
V86	90522-3272	Regulating valve	8802GD/8694 70 Kvs 7.1 % NC EN10357-D W25.0x1.2 DN20 316L SS/SS Max. dP 16 bar(g)	1226927-0101	6000	Change	Spare part kit (Wet end)	90520-4172	Spare part kit	1	
V331	90521-1727	Regulating valve	8802GD/8694 W SMS 25x1.2 NO Top Control 8694 Positioner Body 316L Seats 316L	1226927-0101	6000	Check	Function			1	
V331	90521-1727	Regulating valve	8802GD/8694 W SMS 25x1.2 NO Top Control 8694 Positioner Body 316L Seats 316L	1226927-0101	6000	Change	Spare part kit	90518-8548	Packing gland seals	1	
V331	90521-1727	Regulating valve	8802GD/8694 W SMS 25x1.2 NO Top Control 8694 Positioner Body 316L Seats 316L	1226927-0101	6000	Change	Spare part kit	90521-5829	Spare part kit	1	
V344	90511-5972	Regulating valve	3241-7/3277/3730-1 DN65 NC Kv60 SS/SS 350cm2 1.4-2.3bar	1224794-0101	6000	Check	Function			1	

This document and its content are our exclusive property and must not be copied, reproduced, transmitted or communicated to any other party or used for purposes not expressly permitted by us

Label	Material No.	Denomination	Type	Doc No. Reference	Interval (hr)	Action	Description	Sparepart No.	Denomination	Qty	Action performed Date / Result
V344	90511-5972	Regulating valve	3241-7/3277/3730-1 DN65 NC Kv60 SS/SS 350cm2 1.4-2.3bar	1224794-0101	18000	Change	Spare part kit (Actuator)	6-990417 68	Spare part kit	1	
V344	90511-5972	Regulating valve	3241-7/3277/3730-1 DN65 NC Kv60 SS/SS 350cm2 1.4-2.3bar	1224794-0101	12000	Change	Spare part kit (Wet end)	6-990417 70	Spare part kit	1	
V381	90511-6544	Regulating valve	3244/3277/3730-1 DN40 Kvs25 350cm2 0.4-1.2bar PN16 Divert NC/A	1224795-0101	6000	Check	Function			1	
V381	90511-6544	Regulating valve	3244/3277/3730-1 DN40 Kvs25 350cm2 0.4-1.2bar PN16 Divert NC/A	1224795-0101	18000	Change	Spare part kit (Actuator)	6-990417 68	Spare part kit	1	
V381	90511-6544	Regulating valve	3244/3277/3730-1 DN40 Kvs25 350cm2 0.4-1.2bar PN16 Divert NC/A	1224795-0101	12000	Change	Spare part kit (Wet end)	6-990425 20	Spare part kit	1	
V391	90512-2878	Regulating valve	3244/3277/3730-1 DN100 Kvs100 700cm2 0.8-2.4bar NC/A	1224795-0101	6000	Check	Function			1	
V391	90512-2878	Regulating valve	3244/3277/3730-1 DN100 Kvs100 700cm2 0.8-2.4bar NC/A	1224795-0101	18000	Change	Spare part kit (Actuator)	6-990417 69	Spare part kit	1	
V391	90512-2878	Regulating valve	3244/3277/3730-1 DN100 Kvs100 700cm2 0.8-2.4bar NC/A	1224795-0101	12000	Change	Spare part kit (Wet end)	90512-3480	Spare part kit	1	
V347	90503-7704	Safety valve	Leser 4414.4664 DN40/65 3.5bar High performance, DN40, body 1.4408 closed lifting device, PED approval	1220118-0101	2000	Check	Function			1	
BTD01	6-31542 1495 1	Balance tank	BTD-200 SMS Acc.to dwg:31542-1495	1213378-0101	3000	Check	Function			1	
BTD02	6-31542 1329 1	CIP Header Batch	CIP HB tank 125L SMS Acc to dwg:31542-1329 Rev04	3281944-0101	3000	Check	Function			1	
PX74	90510-8981	I/P converter	ITV1050 0-0.9MPa 24V DC 4-20m A/PNP ISO228/1-G3/8 M12 Male 4-pin	1224084-0101	6000	Check	Function			1	
PX78	90510-8981	I/P converter	ITV1050 0-0.9MPa 24V DC 4-20m A/PNP ISO228/1-G3/8 M12 Male 4-pin	1224084-0101	6000	Check	Function			1	
PX330	90510-8981	I/P converter	ITV1050 0-0.9MPa 24V DC 4-20m A/PNP ISO228/1-G3/8 M12 Male 4-pin	1224084-0101	6000	Check	Function			1	
PX354	90510-8981	I/P converter	ITV1050 0-0.9MPa 24V DC 4-20m A/PNP ISO228/1-G3/8 M12 Male 4-pin	1224084-0101	6000	Check	Function			1	
PX362	90510-8981	I/P converter	ITV1050 0-0.9MPa 24V DC 4-20m A/PNP ISO228/1-G3/8 M12 Male 4-pin	1224084-0101	6000	Check	Function			1	
SI353	6-32422 0221 1	Steam injector	Circular gap, Capacity 4.5 - 20m3/h Product In/Out W51/SMS76 1.4436	1241195-0101	6000	Change	O-ring	90522-3724	O-ring	1	
SI353	6-32422 0221 1	Steam injector	Circular gap, Capacity 4.5 - 20m3/h Product In/Out W51/SMS76 1.4436	1241195-0101	6000	Change	O-ring	90522-3727	O-ring	1	
SI353	6-32422 0221 1	Steam injector	Circular gap, Capacity 4.5 - 20m3/h Product In/Out W51/SMS76 1.4436	1241195-0101	6000	Change	O-ring	90522-3728	O-ring	1	
SI353	6-32422 0221 1	Steam injector	Circular gap, Capacity 4.5 - 20m3/h Product In/Out W51/SMS76 1.4436	1241195-0101	6000	Change	Seal ring	6-31317 0380 3	Seal ring	1	
CR345	6-31801 5046 1	Steam trap	FT14-10 R-L, DN20 G3/4" PN16	1211779-0101	6000	Check	Function	90503-6588	Spare part kit	1	
CR353	6-31801 5046 1	Steam trap	FT14-10 R-L, DN20 G3/4" PN16	1211779-0101	6000	Check	Function	90503-6588	Spare part kit	1	
VB383	6-31801 5960 1	Vacuum breaker	VB21 G1/2" PN25	1248349-0101	6000	Check	Function	6-31801 5960 1	Vacuum breaker	1	
VB393	6-31801 5960 1	Vacuum breaker	VB21 G1/2" PN25	1248349-0101	6000	Check	Function	6-31801 5960 1	Vacuum breaker	1	
Sign	359705-0008	Warning Sign ISO, Burn Hazard		3284690-0101	3000	Check	Safety sign	359705-0008	Warning Sign ISO, Burn Hazard	1	
Sign	359705-0008	Warning Sign ISO, Burn Hazard		3284690-0101	3000	Check	Safety sign	359705-0008	Warning Sign ISO, Burn Hazard	2	
Sign	90459-0631	Sign, TP 90459-0631		3284690-0101	3000	Check	Safety sign			1	
Sign	90194-0141	Caution Sign ISO, Dangerous Chemicals		3284690-0101	3000	Check	Safety sign	90194-0141	Caution Sign ISO, Dangerous Chemicals	2	
S16-30_SC tools	90519-0113	Lift trolley	Goldy 100/70 TP Chromium plated For S-vessels spray condenser. CE-mark 1880x555x773mm (HxBxL)	3281785-0101	3000	Check	Function			1	
CP01	2565639-0100	CCP	TA VTIS 10/100	1228796-0101	6000	Adjust	Control panel			1	
PC67	6-990430 45	Air regulator	REG.P.1/4 08 incl.M40 1/8 0-10+SF300 ISO2228/1-G1/4 0-8bar(g)	1241164-0101	6000	Check	Spare parts kit	6-31801 5194 3	Pressure gauge	1	
PC68	6-990430 45	Air regulator	REG.P.1/4 08 incl.M40 1/8 0-10+SF300 ISO2228/1-G1/4 0-8bar(g)	1241164-0101	6000	Check	Spare parts kit	6-31801 5194 3	Pressure gauge	1	
PC76	90503-3190	Air regulator	REG P ISO228/1-G1/4 0-8bar(G) lockable	1241164-0101	3000	Check	Check pressure and leakage	6-31801 5194 3	Pressure gauge	1	
PC76	90503-3190	Air regulator	REG P ISO228/1-G1/4 0-8bar(G) lockable	1241164-0101	6000	Check	Function	6-31801 5194 3	Pressure gauge	1	
S-16	6-32423 1573 1	Flash vessel	S-16 PED EN 1.4301 (AISI304) SMS/Cl. Acc. to draw:32423-1573 rev04	1226601-0101	6000	Check	Function/Sight glass and Cleaning device	6-9611 71 0855	Spray ball	1	
S-16	6-32423 1573 1	Flash vessel	S-16 PED EN 1.4301 (AISI304) SMS/Cl. Acc. to draw:32423-1573 rev04	1226601-0101	6000	Check	Function/Sight glass and Cleaning device	90503-6131	Rotary spray ball	3	
S-16	6-32423 1573 1	Flash vessel	S-16 PED EN 1.4301 (AISI304) SMS/Cl. Acc. to draw:32423-1573 rev04	1226601-0101	6000	Check	Function/Sight glass and Cleaning device	90503-7561	Sight glass	1	
S-16	6-32423 1573 1	Flash vessel	S-16 PED EN 1.4301 (AISI304) SMS/Cl. Acc. to draw:32423-1573 rev04	1226601-0101	6000	Change	Leakage control pressure/vacuum	6-990200 08	O-ring	1	

This document and its content are our exclusive property and must not be copied, reproduced, transmitted or communicated to any other party or used for purposes not expressly permitted by us

Label	Material No.	Denomination	Type	Doc No. Reference	Interval (hr)	Action	Description	Sparepart No.	Denomination	Qty	Action performed Date / Result
S-16	6-32423 1573 1	Flash vessel	S-16 PED EN 1.4301 (AISI304) SMS/Cl. Acc. to draw:32423-1573 rev04	1226601-0101	6000	Change	Leakage control pressure/vacuum	90503-3289	O-ring	1	
S-16	6-32423 1573 1	Flash vessel	S-16 PED EN 1.4301 (AISI304) SMS/Cl. Acc. to draw:32423-1573 rev04	1226601-0101	6000	Change	Leakage control pressure/vacuum	90503-3292	O-ring	1	
S-16	6-32423 1573 1	Flash vessel	S-16 PED EN 1.4301 (AISI304) SMS/Cl. Acc. to draw:32423-1573 rev04	1226601-0101	6000	Change	Leakage control pressure/vacuum	90503-3293	O-ring	1	
S-16	6-32423 1573 1	Flash vessel	S-16 PED EN 1.4301 (AISI304) SMS/Cl. Acc. to draw:32423-1573 rev04	1226601-0101	6000	Change	Leakage control pressure/vacuum	90503-3294	O-ring	1	
S-16	6-32423 1573 1	Flash vessel	S-16 PED EN 1.4301 (AISI304) SMS/Cl. Acc. to draw:32423-1573 rev04	1226601-0101	6000	Change	Leakage control pressure/vacuum	90503-3296	O-ring	1	
S-16	6-32423 1573 1	Flash vessel	S-16 PED EN 1.4301 (AISI304) SMS/Cl. Acc. to draw:32423-1573 rev04	1226601-0101	6000	Change	Leakage control/Sight glass and Cleaning device	6-9611 99 1362	Seal ring	4	
FT04	90516-0519	Magnetic Flow meter	Promag 50H SMS W38.0 0-42000l/h PFA Display 20-55V AC/16-62V DC w.10m cable Pulse signal / 4-20mA HART 0.5% cal.	1218415-0101	12000	Change	Magnetic Flow meter	90503-3351	Gasket	1	
LE08	90522-2085	Level Sensor	UE-VK15 L1=125 L2=925 "Resolution 15mm, pipe 12mm" "PTFE cable 7m, Float type SV"	1241312-0101	6000	Check	Function			1	
LS50	90524-2703	Level Sensor	FTL33 ISO G1/2 10-30VDC 3-wire PNP		6000	Check	Function			1	
LS50	90524-2703	Level Sensor	FTL33 ISO G1/2 10-30VDC 3-wire PNP		6000	Check	Function			1	
LS50	90524-2703	Level Sensor	FTL33 ISO G1/2 10-30VDC 3-wire PNP		6000	Check	Function			1	
LS50	90524-2703	Level Sensor	FTL33 ISO G1/2 10-30VDC 3-wire PNP		6000	Check	Function			1	
LS50	90524-2703	Level Sensor	FTL33 ISO G1/2 10-30VDC 3-wire PNP		6000	Check	Function			1	
LS50	90524-2703	Level Sensor	FTL33 ISO G1/2 10-30VDC 3-wire PNP		6000	Check	Function			1	
LS50	90524-2703	Level Sensor	FTL33 ISO G1/2 10-30VDC 3-wire PNP		6000	Check	Function			1	
LS50	90524-2703	Level Sensor	FTL33 ISO G1/2 10-30VDC 3-wire PNP		6000	Check	Function			1	
LS50	90524-2703	Level Sensor	FTL33 ISO G1/2 10-30VDC 3-wire PNP		6000	Check	Function			1	
LS50	90524-2703	Level Sensor	FTL33 ISO G1/2 10-30VDC 3-wire PNP		6000	Check	Function			1	
LS50	90524-2703	Level Sensor	FTL33 ISO G1/2 10-30VDC 3-wire PNP		6000	Check	Function			1	
LS50	90524-2703	Level Sensor	FTL33 ISO G1/2 10-30VDC 3-wire PNP		6000	Check	Function			1	
LS50	90524-2703	Level Sensor	FTL33 ISO G1/2 10-30VDC 3-wire PNP		6000	Check	Function			1	
LS50	90524-2703	Level Sensor	FTL33 ISO G1/2 10-30VDC 3-wire PNP		6000	Check	Function			1	
LS51	90522-2130	Level switch	FTL33 NPT1/2 10-30V DC, 3-w PNP Compact 316L, Ra<0.76um Plug M12, IP 65/67 NEMA 4X	3283723-0101	6000	Check	Function			1	
LSL66	90522-2130	Level switch	FTL33 NPT1/2 10-30V DC, 3-w PNP Compact 316L, Ra<0.76um Plug M12, IP 65/67 NEMA 4X	3283723-0101	6000	Check	Function			1	
PI01	90522-0150	Pressure gauge	SMS38 0-1MPa/0-10bar(g) v. 233.50.100 lower mount 990.19 DN 1 1/2" union nut	1212430-0101	6000	Check	Function			1	
PI03	90522-0152	Pressure gauge	SMS38 0-2.5MPa/0-25bar(g) v. 233.50.100 lower mount 990.19 DN 1 1/2" union nut	1212430-0101	6000	Check	Function			1	
PI07	90522-0150	Pressure gauge	SMS38 0-1MPa/0-10bar(g) v. 233.50.100 lower mount 990.19 DN 1 1/2" union nut	1212430-0101	6000	Check	Function			1	
PI08	90522-0140	Pressure gauge	G3/8" 0-1MPa/0-10bar(g) v. 233.50.100 lower mount	1212430-0101	6000	Check	Function			1	
PI10	90522-0140	Pressure gauge	G3/8" 0-1MPa/0-10bar(g) v. 233.50.100 lower mount	1212430-0101	6000	Check	Function			1	
PI11	90522-0158	Pressure gauge	SMS38 0-25bar(g) h. 233.50.100 lower back mount 990.19 DN 1 1/2" union nut	1212430-0101	6000	Check	Function			1	
PI302	90522-0150	Pressure gauge	SMS38 0-1MPa/0-10bar(g) v. 233.50.100 lower mount 990.19 DN 1 1/2" union nut	1212430-0101	6000	Check	Function			1	
PI305	90522-0156	Pressure gauge	SMS38 0-1MPa/0-10bar(g) h. 233.50.100 lower back mount 990.19 DN 1 1/2" union nut	1212430-0101	6000	Check	Function			1	
PI312	90522-0156	Pressure gauge	SMS38 0-1MPa/0-10bar(g) h. 233.50.100 lower back mount 990.19 DN 1 1/2" union nut	1212430-0101	6000	Check	Function			1	
PI315	90522-0140	Pressure gauge	G3/8" 0-1MPa/0-10bar(g) v. 233.50.100 lower mount	1212430-0101	6000	Check	Function			1	
PI316	90522-0154	Pressure gauge	SMS38 -1-3bar(g) v. 233.50.100 lower mount 990.19 DN 1 1/2" union nut	1212430-0101	6000	Check	Function			1	
PI380	90522-0140	Pressure gauge	G3/8" 0-1MPa/0-10bar(g) v. 233.50.100 lower mount	1212430-0101	6000	Check	Function			1	
PI390	90522-0140	Pressure gauge	G3/8" 0-1MPa/0-10bar(g) v. 233.50.100 lower mount	1212430-0101	6000	Check	Function			1	

This document and its content are our exclusive property and must not be copied, reproduced, transmitted or communicated to any other party or used for purposes not expressly permitted by us

Label	Material No.	Denomination	Type	Doc No. Reference	Interval (hr)	Action	Description	Sparepart No.	Denomination	Qty	Action performed Date / Result
PT44	90503-3245	Pressure transmitter	PTP31 G1/2" A 0-10bar(g) 12-30V DC 4-wire PNP 4-20mA SS house IP66 Connector M12x1.5	1218198-0101	3000	Check	Function			1	
PT66	90503-3245	Pressure transmitter	PTP31 G1/2" A 0-10bar(g) 12-30V DC 4-wire PNP 4-20mA SS house IP66 Connector M12x1.5	1218198-0101	3000	Check	Function			1	
PT313	90503-3245	Pressure transmitter	PTP31 G1/2" A 0-10bar(g) 12-30V DC 4-wire PNP 4-20mA SS house IP66 Connector M12x1.5	1218198-0101	3000	Check	Function			1	
TT01	90510-5633	Temperature transmitter	TPT12 4-20mA Measuring range 0-160 deg. C	3283902-0101	6000	Check	Temperature transmitter			1	
TT03	90510-5633	Temperature transmitter	TPT12 4-20mA Measuring range 0-160 deg. C	3283902-0101	6000	Check	Temperature transmitter			1	
TT06	90510-5633	Temperature transmitter	TPT12 4-20mA Measuring range 0-160 deg. C	3283902-0101	6000	Check	Temperature transmitter			1	
TT08	90510-5633	Temperature transmitter	TPT12 4-20mA Measuring range 0-160 deg. C	3283902-0101	6000	Check	Temperature transmitter			1	
TT09	90510-5633	Temperature transmitter	TPT12 4-20mA Measuring range 0-160 deg. C	3283902-0101	6000	Check	Temperature transmitter			1	
TT10	90510-5633	Temperature transmitter	TPT12 4-20mA Measuring range 0-160 deg. C	3283902-0101	6000	Check	Temperature transmitter			1	
TT26	90510-5633	Temperature transmitter	TPT12 4-20mA Measuring range 0-160 deg. C	3283902-0101	6000	Check	Temperature transmitter			1	
TT39	90510-5633	Temperature transmitter	TPT12 4-20mA Measuring range 0-160 deg. C	3283902-0101	6000	Check	Temperature transmitter			1	
TT44	90510-5633	Temperature transmitter	TPT12 4-20mA Measuring range 0-160 deg. C	3283902-0101	6000	Check	Temperature transmitter			1	
TT60	90510-5633	Temperature transmitter	TPT12 4-20mA Measuring range 0-160 deg. C	3283902-0101	6000	Check	Temperature transmitter			1	
TT63	90510-5633	Temperature transmitter	TPT12 4-20mA Measuring range 0-160 deg. C	3283902-0101	6000	Check	Temperature transmitter			1	
TT71	90510-5633	Temperature transmitter	TPT12 4-20mA Measuring range 0-160 deg. C	3283902-0101	6000	Check	Temperature transmitter			1	
TT74	90510-5633	Temperature transmitter	TPT12 4-20mA Measuring range 0-160 deg. C	3283902-0101	6000	Check	Temperature transmitter			1	
TT305	90510-5633	Temperature transmitter	TPT12 4-20mA Measuring range 0-160 deg. C	3283902-0101	6000	Check	Temperature transmitter			1	
TT308	90510-5633	Temperature transmitter	TPT12 4-20mA Measuring range 0-160 deg. C	3283902-0101	6000	Check	Temperature transmitter			1	
TT319	90510-5633	Temperature transmitter	TPT12 4-20mA Measuring range 0-160 deg. C	3283902-0101	6000	Check	Temperature transmitter			1	
TT331	90510-5633	Temperature transmitter	TPT12 4-20mA Measuring range 0-160 deg. C	3283902-0101	6000	Check	Temperature transmitter			1	
TT339	90510-5633	Temperature transmitter	TPT12 4-20mA Measuring range 0-160 deg. C	3283902-0101	6000	Check	Temperature transmitter			1	
TT340	90510-5633	Temperature transmitter	TPT12 4-20mA Measuring range 0-160 deg. C	3283902-0101	6000	Check	Temperature transmitter			1	
TT341	90510-5633	Temperature transmitter	TPT12 4-20mA Measuring range 0-160 deg. C	3283902-0101	6000	Check	Temperature transmitter			1	
TT342	90510-5633	Temperature transmitter	TPT12 4-20mA Measuring range 0-160 deg. C	3283902-0101	6000	Check	Temperature transmitter			1	
TT345	90510-5633	Temperature transmitter	TPT12 4-20mA Measuring range 0-160 deg. C	3283902-0101	6000	Check	Temperature transmitter			1	
TT346	90510-5633	Temperature transmitter	TPT12 4-20mA Measuring range 0-160 deg. C	3283902-0101	6000	Check	Temperature transmitter			1	
TT347	90510-5633	Temperature transmitter	TPT12 4-20mA Measuring range 0-160 deg. C	3283902-0101	6000	Check	Temperature transmitter			1	
TT362	90510-5633	Temperature transmitter	TPT12 4-20mA Measuring range 0-160 deg. C	3283902-0101	6000	Check	Temperature transmitter			1	
TT380	90510-5633	Temperature transmitter	TPT12 4-20mA Measuring range 0-160 deg. C	3283902-0101	6000	Check	Temperature transmitter			1	
TT381	90510-5633	Temperature transmitter	TPT12 4-20mA Measuring range 0-160 deg. C	3283902-0101	6000	Check	Temperature transmitter			1	
TT390	90510-5633	Temperature transmitter	TPT12 4-20mA Measuring range 0-160 deg. C	3283902-0101	6000	Check	Temperature transmitter			1	
TT391	90510-5633	Temperature transmitter	TPT12 4-20mA Measuring range 0-160 deg. C	3283902-0101	6000	Check	Temperature transmitter			1	
V05	6-9613 32 4088	Single seat valve	SSV-W-25-200-NC-EPDM HP Shut off Maintainable actuator	1221121-0101	6000	Check	Function			1	
V05	6-9613 32 4088	Single seat valve	SSV-W-25-200-NC-EPDM HP Shut off Maintainable actuator	1221121-0101	18000	Change	Spare part kit (Actuator)	6-9611 92 6498	Service kit	1	
V05	6-9613 32 4088	Single seat valve	SSV-W-25-200-NC-EPDM HP Shut off Maintainable actuator	1221121-0101	12000	Change	Spare part kit (Wet end)	6-9611 92 6501	Service kit	1	
V11	6-9613 36 3175	Single seat valve	SSV-W-51-210-NC-EPDM TP Change Over Maintainable actuator	1221122-0101	6000	Check	Function			1	
V11	6-9613 36 3175	Single seat valve	SSV-W-51-210-NC-EPDM TP Change Over Maintainable actuator	1221122-0101	18000	Change	Spare part kit (Actuator)	6-9611 92 6738	Service kit	1	
V11	6-9613 36 3175	Single seat valve	SSV-W-51-210-NC-EPDM TP Change Over Maintainable actuator	1221122-0101	6000	Change	Spare part kit (Wet end)	6-9611 92 6581	Service kit	1	
V14	6-9613 36 0067	Single seat valve	SSV-W-51-210-NO-EPDM Change Over	1221122-0101	6000	Check	Function			1	
V14	6-9613 36 0067	Single seat valve	SSV-W-51-210-NO-EPDM Change Over	1221122-0101	18000	Change	Spare part kit (Actuator)	6-9611 92 6500	Service kit	1	
V14	6-9613 36 0067	Single seat valve	SSV-W-51-210-NO-EPDM Change Over	1221122-0101	6000	Change	Spare part kit (Wet end)	6-9611 92 6581	Service kit	1	
V15	6-9613 36 3185	Single seat valve	SSV-W-51-210-NO-EPDM TP Change Over Maintainable actuator	1221122-0101	6000	Check	Function			1	
V15	6-9613 36 3185	Single seat valve	SSV-W-51-210-NO-EPDM TP Change Over Maintainable actuator	1221122-0101	18000	Change	Spare part kit (Actuator)	6-9611 92 6738	Service kit	1	
V15	6-9613 36 3185	Single seat valve	SSV-W-51-210-NO-EPDM TP Change Over Maintainable actuator	1221122-0101	6000	Change	Spare part kit (Wet end)	6-9611 92 6581	Service kit	1	
V16	6-9613 36 0055	Single seat valve	SSV-W-63.5-210-NC-EPDM Change Over	1221122-0101	6000	Check	Function			1	
V16	6-9613 36 0055	Single seat valve	SSV-W-63.5-210-NC-EPDM Change Over	1221122-0101	18000	Change	Spare part kit (Actuator)	6-9611 92 6500	Service kit	1	
V16	6-9613 36 0055	Single seat valve	SSV-W-63.5-210-NC-EPDM Change Over	1221122-0101	6000	Change	Spare part kit (Wet end)	6-9611 92 6582	Service kit	1	
V27	6-9613 36 0067	Single seat valve	SSV-W-51-210-NO-EPDM Change Over	1221122-0101	6000	Check	Function			1	
V27	6-9613 36 0067	Single seat valve	SSV-W-51-210-NO-EPDM Change Over	1221122-0101	18000	Change	Spare part kit (Actuator)	6-9611 92 6500	Service kit	1	
V27	6-9613 36 0067	Single seat valve	SSV-W-51-210-NO-EPDM Change Over	1221122-0101	6000	Change	Spare part kit (Wet end)	6-9611 92 6581	Service kit	1	
V28	6-9613 36 0067	Single seat valve	SSV-W-51-210-NO-EPDM Change Over	1221122-0101	6000	Check	Function			1	
V28	6-9613 36 0067	Single seat valve	SSV-W-51-210-NO-EPDM Change Over	1221122-0101	18000	Change	Spare part kit (Actuator)	6-9611 92 6500	Service kit	1	

This document and its content are our exclusive property and must not be copied, reproduced, transmitted or communicated to any other party or used for purposes not expressly permitted by us

Label	Material No.	Denomination	Type	Doc No. Reference	Interval (hr)	Action	Description	Sparepart No.	Denomination	Qty	Action performed Date / Result
V28	6-9613 36 0067	Single seat valve	SSV-W-51-210-NO-EPDM Change Over	1221122-0101	6000	Change	Spare part kit (Wet end)	6-9611 92 6581	Service kit	1	
V51	6-9613 32 9402	Single seat valve	SSV-W-51-300-NC-EPDM as. HP Shut off Maintainable actuator	1222444-0101	6000	Check	Function			1	
V51	6-9613 32 9402	Single seat valve	SSV-W-51-300-NC-EPDM as. HP Shut off Maintainable actuator	1222444-0101	18000	Change	Service kit (Actuator)	6-9611 92 6499	Service kit	1	
V51	6-9613 32 9402	Single seat valve	SSV-W-51-300-NC-EPDM as. HP Shut off Maintainable actuator	1222444-0101	6000	Change	Service kit (Wet end)	6-9611 92 6545	Service kit	1	
V61	6-9613 36 3175	Single seat valve	SSV-W-51-210-NC-EPDM TP Change Over Maintainable actuator	1221122-0101	6000	Check	Function			1	
V61	6-9613 36 3175	Single seat valve	SSV-W-51-210-NC-EPDM TP Change Over Maintainable actuator	1221122-0101	18000	Change	Spare part kit (Actuator)	6-9611 92 6738	Service kit	1	
V61	6-9613 36 3175	Single seat valve	SSV-W-51-210-NC-EPDM TP Change Over Maintainable actuator	1221122-0101	6000	Change	Spare part kit (Wet end)	6-9611 92 6581	Service kit	1	
V75	6-9613 36 0458	Single seat valve	SSV-W-51-111-NC-EPDM RA Change Over	1221124-0101	6000	Check	Function			1	
V75	6-9613 36 0458	Single seat valve	SSV-W-51-111-NC-EPDM RA Change Over	1221124-0101	18000	Change	Spare part kit (Actuator)	6-9611 92 6500	Service kit	1	
V75	6-9613 36 0458	Single seat valve	SSV-W-51-111-NC-EPDM RA Change Over	1221124-0101	6000	Change	Spare part kit (Wet end)	6-9611 92 6599	Service kit	1	
V76	6-9613 32 7362	Single seat valve	SSV-W-51-112-NO-EPDM RA Change Over	1221124-0101	6000	Check	Function			1	
V76	6-9613 32 7362	Single seat valve	SSV-W-51-112-NO-EPDM RA Change Over	1221124-0101	18000	Change	Service kit (Actuator)	6-9611 92 6500	Service kit	1	
V76	6-9613 32 7362	Single seat valve	SSV-W-51-112-NO-EPDM RA Change Over	1221124-0101	6000	Change	Service kit (Wet end)	6-9611 92 6599	Service kit	1	
V311	6-9613 36 0554	Single seat valve	SSV-W-51-210-NC-EPDM as. Change Over	1222462-0101	6000	Check	Function			1	
V311	6-9613 36 0554	Single seat valve	SSV-W-51-210-NC-EPDM as. Change Over	1222462-0101	18000	Change	Spare part kit (Actuator)	6-9611 92 6500	Service kit	1	
V311	6-9613 36 0554	Single seat valve	SSV-W-51-210-NC-EPDM as. Change Over	1222462-0101	6000	Change	Spare part kit (Wet end)	6-9611 92 6617	Service kit	1	
V312	6-9613 36 0518	Single seat valve	SSV-W-51-200-NO-EPDM as. Shut off	1222444-0101	6000	Check	Function			1	
V312	6-9613 36 0518	Single seat valve	SSV-W-51-200-NO-EPDM as. Shut off	1222444-0101	18000	Change	Spare part kit (Actuator)	6-9611 92 6500	Service kit	1	
V312	6-9613 36 0518	Single seat valve	SSV-W-51-200-NO-EPDM as. Shut off	1222444-0101	6000	Change	Spare part kit (Wet end)	6-9611 92 6545	Service kit	1	
V313	6-9613 32 9997	Single seat valve	SSV-W-63.5-210-NO-EPDM as. TP Change Over Maintainable actuator	1222462-0101	6000	Check	Function			1	
V313	6-9613 32 9997	Single seat valve	SSV-W-63.5-210-NO-EPDM as. TP Change Over Maintainable actuator	1222462-0101	18000	Change	Service kit (Actuator)	6-9611 92 6738	Service kit	1	
V313	6-9613 32 9997	Single seat valve	SSV-W-63.5-210-NO-EPDM as. TP Change Over Maintainable actuator	1222462-0101	6000	Change	Service kit (Wet end)	6-9611 92 6618	Service kit	1	
V314	6-9613 33 0485	Single seat valve	SSV-W-51-220-NO-EPDM as. TP Change Over Maintainable actuator	1222462-0101	6000	Check	Function			1	
V314	6-9613 33 0485	Single seat valve	SSV-W-51-220-NO-EPDM as. TP Change Over Maintainable actuator	1222462-0101	18000	Change	Service kit (Actuator)	6-9611 92 6738	Service kit	1	
V314	6-9613 33 0485	Single seat valve	SSV-W-51-220-NO-EPDM as. TP Change Over Maintainable actuator	1222462-0101	6000	Change	Service kit (Wet end)	6-9611 92 6617	Service kit	1	
V315	6-9613 36 0590	Single seat valve	SSV-W-51-220-NO-EPDM as. Change Over	1222462-0101	6000	Check	Function			1	
V315	6-9613 36 0590	Single seat valve	SSV-W-51-220-NO-EPDM as. Change Over	1222462-0101	18000	Change	Spare part kit (Actuator)	6-9611 92 6500	Service kit	1	
V315	6-9613 36 0590	Single seat valve	SSV-W-51-220-NO-EPDM as. Change Over	1222462-0101	6000	Change	Spare part kit (Wet end)	6-9611 92 6617	Service kit	1	
V320	6-9613 36 0530	Single seat valve	SSV-W-51-300-NC-EPDM as. Shut off	1222444-0101	6000	Check	Function			1	
V320	6-9613 36 0530	Single seat valve	SSV-W-51-300-NC-EPDM as. Shut off	1222444-0101	18000	Change	Spare part kit (Actuator)	6-9611 92 6500	Service kit	1	
V320	6-9613 36 0530	Single seat valve	SSV-W-51-300-NC-EPDM as. Shut off	1222444-0101	6000	Change	Spare part kit (Wet end)	6-9611 92 6545	Service kit	1	
V321	6-9613 36 0530	Single seat valve	SSV-W-51-300-NC-EPDM as. Shut off	1222444-0101	6000	Check	Function			1	
V321	6-9613 36 0530	Single seat valve	SSV-W-51-300-NC-EPDM as. Shut off	1222444-0101	18000	Change	Spare part kit (Actuator)	6-9611 92 6500	Service kit	1	
V321	6-9613 36 0530	Single seat valve	SSV-W-51-300-NC-EPDM as. Shut off	1222444-0101	6000	Change	Spare part kit (Wet end)	6-9611 92 6545	Service kit	1	
V382	6-9613 36 0001	Single seat valve	SSV-W-38-200-NC-EPDM Shut off	1221121-0101	6000	Check	Function			1	
V382	6-9613 36 0001	Single seat valve	SSV-W-38-200-NC-EPDM Shut off	1221121-0101	18000	Change	Spare part kit (Actuator)	6-9611 92 6500	Service kit	1	
V382	6-9613 36 0001	Single seat valve	SSV-W-38-200-NC-EPDM Shut off	1221121-0101	6000	Change	Spare part kit (Wet end)	6-9611 92 6502	Service kit	1	
V383	6-9613 36 0001	Single seat valve	SSV-W-38-200-NC-EPDM Shut off	1221121-0101	6000	Check	Function			1	
V383	6-9613 36 0001	Single seat valve	SSV-W-38-200-NC-EPDM Shut off	1221121-0101	18000	Change	Spare part kit (Actuator)	6-9611 92 6500	Service kit	1	
V383	6-9613 36 0001	Single seat valve	SSV-W-38-200-NC-EPDM Shut off	1221121-0101	6000	Change	Spare part kit (Wet end)	6-9611 92 6502	Service kit	1	
V392	6-9613 36 0005	Single seat valve	SSV-W-101.6-200-NC-EPDM Shut off	1221121-0101	6000	Check	Function			1	
V392	6-9613 36 0005	Single seat valve	SSV-W-101.6-200-NC-EPDM Shut off	1221121-0101	18000	Change	Spare part kit (Actuator)	6-9611 92 6500	Service kit	1	
V392	6-9613 36 0005	Single seat valve	SSV-W-101.6-200-NC-EPDM Shut off	1221121-0101	6000	Change	Spare part kit (Wet end)	6-9611 92 6506	Service kit	1	
V393	6-9613 36 0005	Single seat valve	SSV-W-101.6-200-NC-EPDM Shut off	1221121-0101	6000	Check	Function			1	
V393	6-9613 36 0005	Single seat valve	SSV-W-101.6-200-NC-EPDM Shut off	1221121-0101	18000	Change	Spare part kit (Actuator)	6-9611 92 6500	Service kit	1	
V393	6-9613 36 0005	Single seat valve	SSV-W-101.6-200-NC-EPDM Shut off	1221121-0101	6000	Change	Spare part kit (Wet end)	6-9611 92 6506	Service kit	1	
V13	6-9612 62 8355	Butterfly valve	LKB-W-51-316L-EPDM-P85-NC	1215850-0101	6000	Check	Function			1	
V13	6-9612 62 8355	Butterfly valve	LKB-W-51-316L-EPDM-P85-NC	1215850-0101	12000	Change	Spare part kit (Actuator)	6-9611 92 3021	Service kit	1	
V13	6-9612 62 8355	Butterfly valve	LKB-W-51-316L-EPDM-P85-NC	1215850-0101	6000	Change	Spare part kit (Wet end)	6-9611 92 3030	Service kit	1	
V17	6-9612 62 8356	Butterfly valve	LKB-W-63,5-316L-EPDM-P85-NC	1215850-0101	6000	Check	Function			1	
V17	6-9612 62 8356	Butterfly valve	LKB-W-63,5-316L-EPDM-P85-NC	1215850-0101	12000	Change	Spare part kit (Actuator)	6-9611 92 3010	Service kit	1	
V17	6-9612 62 8356	Butterfly valve	LKB-W-63,5-316L-EPDM-P85-NC	1215850-0101	6000	Change	Spare part kit (Wet end)	6-9611 92 3031	Service kit	1	
V18	6-9612 62 8710	Butterfly valve	LKB-W-63.5-316L-EPDM-P85-NO	1215850-0101	6000	Check	Function			1	
V18	6-9612 62 8710	Butterfly valve	LKB-W-63.5-316L-EPDM-P85-NO	1215850-0101	12000	Change	Spare part kit (Actuator)	6-9611 92 3021	Service kit	1	
V18	6-9612 62 8710	Butterfly valve	LKB-W-63.5-316L-EPDM-P85-NO	1215850-0101	6000	Change	Spare part kit (Wet end)	6-9611 92 3031	Service kit	1	

This document and its content are our exclusive property and must not be copied, reproduced, transmitted or communicated to any other party or used for purposes not expressly permitted by us

Label	Material No.	Denomination	Type	Doc No. Reference	Interval (hr)	Action	Description	Sparepart No.	Denomination	Qty	Action performed Date / Result
V380	6-9612 62 8357	Butterfly valve	LKB-W-76.1-316L-EPDM-P85 NC	1215850-0101	6000	Check	Function			1	
V380	6-9612 62 8357	Butterfly valve	LKB-W-76.1-316L-EPDM-P85 NC	1215850-0101	12000	Change	Spare part kit (Actuator)	6-9611 92 3021	Service kit	1	
V380	6-9612 62 8357	Butterfly valve	LKB-W-76.1-316L-EPDM-P85 NC	1215850-0101	6000	Change	Spare part kit (Wet end)	6-9611 92 3032	Service kit	1	
V385	6-9612 62 8354	Butterfly valve	LKB-W-38-316L-EPDM-P85-NC	1215850-0101	6000	Check	Function			1	
V385	6-9612 62 8354	Butterfly valve	LKB-W-38-316L-EPDM-P85-NC	1215850-0101	12000	Change	Spare part kit (Actuator)	6-9611 92 3021	Service kit	1	
V385	6-9612 62 8354	Butterfly valve	LKB-W-38-316L-EPDM-P85-NC	1215850-0101	6000	Change	Spare part kit (Wet end)	6-9611 92 3029	Service kit	1	
V390	6-9612 62 8358	Butterfly valve	LKB-W-101,6-316L-EPDM-P133 NC	1215850-0101	6000	Check	Function			1	
V390	6-9612 62 8358	Butterfly valve	LKB-W-101,6-316L-EPDM-P133 NC	1215850-0101	12000	Change	Spare part kit (Actuator)	6-9611 92 3056	Service kit	1	
V390	6-9612 62 8358	Butterfly valve	LKB-W-101,6-316L-EPDM-P133 NC	1215850-0101	6000	Change	Spare part kit (Wet end)	6-9611 92 3033	Service kit	1	
V395	6-9612 62 8358	Butterfly valve	LKB-W-101,6-316L-EPDM-P133 NC	1215850-0101	6000	Check	Function			1	
V395	6-9612 62 8358	Butterfly valve	LKB-W-101,6-316L-EPDM-P133 NC	1215850-0101	12000	Change	Spare part kit (Actuator)	6-9611 92 3056	Service kit	1	
V395	6-9612 62 8358	Butterfly valve	LKB-W-101,6-316L-EPDM-P133 NC	1215850-0101	6000	Change	Spare part kit (Wet end)	6-9611 92 3033	Service kit	1	
V83	6-9612 19 4001	Actuator	LKLA-T-85-NC	1215850-0101	6000	Check	Function			1	
V83	6-9612 19 4001	Actuator	LKLA-T-85-NC	1215850-0101	18000	Change	Spare parts kit (Actuator)	6-9611 92 3021	Service kit	1	
FB83	6-9613 41 8104	Top unit	IndiTop 8-30V AC/DC PNP With 0.5m cable, M12 5 contact	1221736-0101	3000	Check	Function			1	
FB84	90521-6272	Top control	8697 2 sw 1 M16	3280255-0101	6000	Check	Function			1	
V83	90511-2615	Ball valve	Manual SMS-W 25x1.2 red. bore DV20+CVMM 3-way	1224238-0101	12000	Change	Spare part kit (Wet end)	90511-2551	Spare part kit	1	
V10	90512-7413	Seat valve	2000/32 G3/8 NC Kvs=2.4	3282610-0101	6000	Check	Function			1	
V10	90512-7413	Seat valve	2000/32 G3/8 NC Kvs=2.4	3282610-0101	6000	Change	Spare part kit (Wet End)	90518-9008	Service kit	1	
V66	90512-7416	Seat valve	2000/32 W17.2*1.6 NC Kvs=2.4	3282610-0101	6000	Check	Function			1	
V66	90512-7416	Seat valve	2000/32 W17.2*1.6 NC Kvs=2.4	3282610-0101	6000	Change	Spare part kit (Wet End)	90518-9008	Service kit	1	
V80	6-31801 9971 2	Seat valve	2000/63 W25*1.2 NC 11bar(g) Kvs=19	1218030-0101	6000	Check	Function			1	
V80	6-31801 9971 2	Seat valve	2000/63 W25*1.2 NC 11bar(g) Kvs=19	1218030-0101	6000	Change	Spare part kit (Wet End)	90503-4833	Valve seal kit	1	
V80	6-31801 9971 2	Seat valve	2000/63 W25*1.2 NC 11bar(g) Kvs=19	1218030-0101	18000	Change	Spare parts kit (Actuator)	90519-0408	Spare part kit	1	
V82	6-31801 9971 2	Seat valve	2000/63 W25*1.2 NC 11bar(g) Kvs=19	1218030-0101	6000	Check	Function			1	
V82	6-31801 9971 2	Seat valve	2000/63 W25*1.2 NC 11bar(g) Kvs=19	1218030-0101	6000	Change	Spare part kit (Wet End)	90503-4833	Valve seal kit	1	
V82	6-31801 9971 2	Seat valve	2000/63 W25*1.2 NC 11bar(g) Kvs=19	1218030-0101	18000	Change	Spare parts kit (Actuator)	90519-0408	Spare part kit	1	
V84	6-31801 9975 1	Seat valve	2000/63 W25*1.2 NO 16bar(g) Kvs=19	1218030-0101	6000	Check	Function			1	
V84	6-31801 9975 1	Seat valve	2000/63 W25*1.2 NO 16bar(g) Kvs=19	1218030-0101	6000	Change	Spare part kit (Wet End)	90503-4833	Valve seal kit	1	
V84	6-31801 9975 1	Seat valve	2000/63 W25*1.2 NO 16bar(g) Kvs=19	1218030-0101	18000	Change	Spare parts kit (Actuator)	90519-0408	Spare part kit	1	
V87	90503-5999	Seat valve	2000/G100 DN50 W NC SS/PTFE Kv 55	1218030-0101	6000	Check	Function			1	
V87	90503-5999	Seat valve	2000/G100 DN50 W NC SS/PTFE Kv 55	1218030-0101	6000	Change	Spare part kit (Wet End)	6-990416 39	Spare part kit	1	
V87	90503-5999	Seat valve	2000/G100 DN50 W NC SS/PTFE Kv 55	1218030-0101	18000	Change	Spare parts kit (Actuator)	6-990413 88	Spare part kit	1	
V316	90503-3126	Seat valve	2000/E63 W DN50 316L/PTFE NO	1218030-0101	6000	Check	Function			1	
V316	90503-3126	Seat valve	2000/E63 W DN50 316L/PTFE NO	1218030-0101	6000	Change	Spare part kit (Wet End)	6-990416 39	Spare part kit	1	
V316	90503-3126	Seat valve	2000/E63 W DN50 316L/PTFE NO	1218030-0101	18000	Change	Spare parts kit (Actuator)	90519-0408	Spare part kit	1	
V322	90503-1596	Seat valve	2000/E63 W DN25 316L/PTFE 11bar NC Kv 19.0	1218030-0101	6000	Check	Function			1	
V322	90503-1596	Seat valve	2000/E63 W DN25 316L/PTFE 11bar NC Kv 19.0	1218030-0101	6000	Change	Spare part kit (Wet End)	90503-4833	Valve seal kit	1	
V322	90503-1596	Seat valve	2000/E63 W DN25 316L/PTFE 11bar NC Kv 19.0	1218030-0101	18000	Change	Spare parts kit (Actuator)	90519-0408	Spare part kit	1	
V323	90503-1596	Seat valve	2000/E63 W DN25 316L/PTFE 11bar NC Kv 19.0	1218030-0101	6000	Check	Function			1	
V323	90503-1596	Seat valve	2000/E63 W DN25 316L/PTFE 11bar NC Kv 19.0	1218030-0101	6000	Change	Spare part kit (Wet End)	90503-4833	Valve seal kit	1	
V323	90503-1596	Seat valve	2000/E63 W DN25 316L/PTFE 11bar NC Kv 19.0	1218030-0101	18000	Change	Spare parts kit (Actuator)	90519-0408	Spare part kit	1	
V328	90512-7413	Seat valve	2000/32 G3/8 NC Kvs=2.4	3282610-0101	6000	Check	Function			1	
V328	90512-7413	Seat valve	2000/32 G3/8 NC Kvs=2.4	3282610-0101	6000	Change	Spare part kit (Wet End)	90518-9008	Service kit	1	
V329	90512-7413	Seat valve	2000/32 G3/8 NC Kvs=2.4	3282610-0101	6000	Check	Function			1	
V329	90512-7413	Seat valve	2000/32 G3/8 NC Kvs=2.4	3282610-0101	6000	Change	Spare part kit (Wet End)	90518-9008	Service kit	1	
V334	6-31801 9975 1	Seat valve	2000/63 W25*1.2 NO 16bar(g) Kvs=19	1218030-0101	6000	Check	Function			1	
V334	6-31801 9975 1	Seat valve	2000/63 W25*1.2 NO 16bar(g) Kvs=19	1218030-0101	6000	Change	Spare part kit (Wet End)	90503-4833	Valve seal kit	1	
V334	6-31801 9975 1	Seat valve	2000/63 W25*1.2 NO 16bar(g) Kvs=19	1218030-0101	18000	Change	Spare parts kit (Actuator)	90519-0408	Spare part kit	1	
V339	6-31801 9970 1	Seat valve	2000/C40 G3/8 SS PTFE NC 15bar(g) Kvs=3.7	1218030-0101	6000	Check	Function			1	
V339	6-31801 9970 1	Seat valve	2000/C40 G3/8 SS PTFE NC 15bar(g) Kvs=3.7	1218030-0101	6000	Change	Spare part kit (Wet End)	6-990416 34	Spare part kit	1	
V339	6-31801 9970 1	Seat valve	2000/C40 G3/8 SS PTFE NC 15bar(g) Kvs=3.7	1218030-0101	18000	Change	Spare parts kit (Actuator)	90519-0409	Spare part kit	1	
V66.2	90512-7416	Seat valve	2000/32 W17.2*1.6 NC Kvs=2.4	3282610-0101	6000	Check	Function			1	
V66.2	90512-7416	Seat valve	2000/32 W17.2*1.6 NC Kvs=2.4	3282610-0101	6000	Change	Spare part kit (Wet End)	90518-9008	Service kit	1	
V85.1	6-31801 9971 2	Seat valve	2000/63 W25*1.2 NC 11bar(g) Kvs=19	1218030-0101	6000	Check	Function			1	
V85.1	6-31801 9971 2	Seat valve	2000/63 W25*1.2 NC 11bar(g) Kvs=19	1218030-0101	6000	Change	Spare part kit (Wet End)	90503-4833	Valve seal kit	1	
V85.1	6-31801 9971 2	Seat valve	2000/63 W25*1.2 NC 11bar(g) Kvs=19	1218030-0101	18000	Change	Spare parts kit (Actuator)	90519-0408	Spare part kit	1	
V85.2	6-31801 9971 2	Seat valve	2000/63 W25*1.2 NC 11bar(g) Kvs=19	1218030-0101	6000	Check	Function			1	
V85.2	6-31801 9971 2	Seat valve	2000/63 W25*1.2 NC 11bar(g) Kvs=19	1218030-0101	6000	Change	Spare part kit (Wet End)	90503-4833	Valve seal kit	1	

This document and its content are our exclusive property and must not be copied, reproduced, transmitted or communicated to any other party or used for purposes not expressly permitted by us

Label	Material No.	Denomination	Type	Doc No. Reference	Interval (hr)	Action	Description	Sparepart No.	Denomination	Qty	Action performed Date / Result
V85.2	6-31801 9971 2	Seat valve	2000/63 W25*1.2 NC 11bar(g) Kvs=19	1218030-0101	18000	Change	Spare parts kit (Actuator)	90519-0408	Spare part kit	1	
F345	6-31801 9899 3	Steam filter	VBA-193-AE/ZCHS3-001C-V 1um W DN80 11bar(g) Material housing/cartridge 1.4307/1.4404	1215497-0101	6000	Clean	Filter cartridge	6-990407 76	Filter cartridge	1	
F345	6-31801 9899 3	Steam filter	VBA-193-AE/ZCHS3-001C-V 1um W DN80 11bar(g) Material housing/cartridge 1.4307/1.4404	1215497-0101	6000	Change	O-ring, cartridge	90515-8457	O-ring	2	
F345	6-31801 9899 3	Steam filter	VBA-193-AE/ZCHS3-001C-V 1um W DN80 11bar(g) Material housing/cartridge 1.4307/1.4404	1215497-0101	6000	Change	O-ring, housing	90515-5077	O-ring	1	
F44	6-31801 5044 1	Strainer	Fig 37 SG DN25 PN40 GGG-40 Mesh=0.8mm	1241073-0101	6000	Check	Function			1	
F353	6-31801 5609 2	Strainer	Fig 12 ISO228/1-G3/4 PN25 SS screen 0.8mm SG Iron	1248674-0101	6000	Change	Strainer	6-990411 85	Spare part kit	1	
QT76	90520-0531	Conductivity sensor	CLD18 Tri-Cl.2", SS house	3283946-0101	6000	Check	Function			1	

This document and its content are our exclusive property and must not be copied, reproduced, transmitted or communicated to any other party or used for purposes not expressly permitted by us

Tetra Pak

GASKET DOCUMENTATION - Unions

Product/model:	**Tetra Therm Aseptic VTIS**	Company:	**Tetra Pak**		
Serial number:	**T5844130774**				
Issued by	Henrik Urban	Issue date:	2016-10-25	Approval by:	
Revision:		Date of revision:		Approval of rev:	

Selection of Gaskets according to line colours of Flow diagram:

Line type	Media	Alternative
Process media	Process	See Alt. 1
Process media, with additional text HP	Process, high pressure	See Alt. 2
Cleaning media	CIP	See Alt. 1
Cleaning media, with additional text Conc.	Concentrate	See Alt. 3
Service media	Water	See Alt. 1
Service media	Steam	See Alt. 4
Service media	Condensate	See Alt. 4
Service media	Process air	See Alt. 1

Selection of gaskets on process side:

General Pipe dimension standard:	1) ISO 2037:SMS 3008
General gasket quality on process side:	EPDM
Type of other general gasket quality:	

Note: The below table shows all possible gasket materials.

Alternative 1 Type of union: SMS (1145) with seal ring Sanitary

	Material quality EPDM	
Dimension:	**Material number**	**Denomination**
25	6-31317 0375 3	Seal ring
38	6-31317 0377 2	Seal ring
51	6-31317 0378 5	Seal ring
63,5	6-31317 0379 3	Seal ring
76,1	6-31317 0380 3	Seal ring
101,6	6-31317 0886 2	Seal ring
104	6-9611 99 4546	Seal ring

Alternative 1 Type of union: SMS version with O-ring

	Material quality EPDM		
Dimension:	**Material number**	**Denomination**	
10	90512-8005	O-ring	Non sanitary
12	6-990261 12	O-ring	Sanitary
16	6-223404 79	O-ring	Sanitary

Alternative 1	Type of union: Clamp (ISO 2852) with seal ring	Sanitary
	Material quality EPDM	
Dimension:	**Material number**	**Denomination**
25	6-9611 99 1358	Seal ring
38	6-9611 99 1359	Seal ring
51	6-9611 99 1360	Seal ring
63,5	6-9611 99 1361	Seal ring
76,1	6-9611 99 1362	Seal ring
101,6	6-9611 99 1363	Seal ring

Alternative 1	Water Pocket Tubes with seal ring	Non sanitary
	Material quality CU	
Dimension:	**Material number**	**Denomination**
3/8"	90510-4770	Seal
1/2"	90510-4771	Seal

Alternative 2	Type of union: SMS HP version, (High Pressure) with O-ring	Sanitary
	Material quality EPDM	
Dimension:	**Material number**	**Denomination**
25	6-99035310	O-ring
38	6-990353 43	O-ring
51	6-990353 38	O-ring
63,5	6-990353 73	O-ring
76,1	6-990353 74	O-ring
101,6	6-990353 77	O-ring
104	6-990353 77	O-ring

Alternative 3	Type of union: SMS (1145) with seal ring	Sanitary
	Material quality PTFE	
Dimension:	**Material number**	**Denomination**
25	90510-4328	Seal ring
38	90510-4329	Seal ring
51	90512-6062	Seal ring
63,5	90512-6063	Seal ring
76,1	90512-6064	Seal ring
101,6	6-31317 0551 7	Seal ring

Alternative 4	Type of union: Flange, EN 1092-1 with seal ring	Non sanitary
	Material quality AFM-34	
Dimension:	**Material number**	**Denomination**
DN15	6-736853 02	Flange seal
DN20	6-736853 03	Flange seal
DN25	6-736853 04	Flange seal
DN32	6-736853 05	Flange seal
DN40	6-736853 06	Flange seal
DN50	6-736853 07	Flange seal
DN65	6-736853 08	Flange seal
DN80	6-736853 09	Flange seal
DN100	6-736853 10	Flange seal
DN125	6-736853 11	Flange seal
DN150	6-736853 12	Flange seal

Tetra Pak Processing Components AB **Preventive maintenance recommendations** Tetra Spiraflo C Serial No.: 1163426 Date: 2016/08/08
Ver. 0

Item No.	Label	Group No.	Denomination	Type	Doc. No. Reference	Interval (h)	Action	Description	Spare part No.	Denomination	Qty	Action performed Date / Result
		TUBULAR HEAT EXCHANGER	**MAINTENANCE MANUAL**									
		FOR PRODUCTION TEMPERATURES BELOW 100 C THE INTERVALS ARE LONGER										
		CM 85/12x16C-6, CM 85/12x16S-6										
						6000	Dismantle	Pipes				
						12000	Change	O-ring	6-99035720	O-ring, C85, Shell	84	
						6000	Change	O-ring	6-99035374	O-ring, Union, Shell	10	
						12000	Change	O-ring	6-99035718	O-ring, C85, Insert	84	
						6000	Change	O-ring	6-99035338	O-ring, Union, Tube return	2	
						6000	Change	Product seal	6-164827501	Product seal, C85, Multitube, EPDM	42	
						6000	Change	O-ring	6-99035338	O-ring, Union, Holding tube 1	10	
						6000	Check	Split ring	6-164760003	Split ring	32	
						36000	Check	Screw	6-99030913	Screw	128	
						6000	Change	O-ring	6-99032224	O-ring	32	
						6000	Check	Split ring	6-164760003	Split ring	10	
						36000	Check	Screw	6-99030912	Screw	40	
						6000	Change	O-ring	6-99032224	O-ring	10	

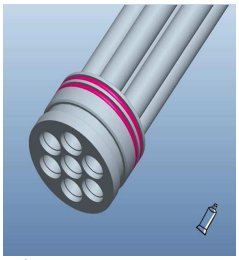

Tube insert CM
Part No.: 6-99035718
Positions:
E1,E2,E3,E4,F1,F2,F3,F4,A3,B2
,B3,A4,B4,B5,B6,C6,D5,D6,A5,
A6,E6



Holding tube
Part No.: 6-99035338
Positions: C2,C3,C4,D2,D3,D4

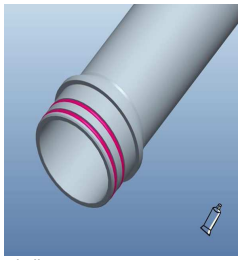

Shell CM
Part No.: 6-99035720
Positions:
E1,E2,E3,E4,F1,F2,F3,F4,A3,B2
,B3,A4,B4,B5,B6,C6,D5,D6,A5,
A6,E6



Return bend
Part No.: 6-164827501
Positions: A4-B4,A6-A5,B2-
B3,B3-A3,B4-B5,B5-B6,B6-
C6,C6-D6,D6-D5,E1-E2,E2-
E3,E3-E4,E4-E4,E2-E1,E3-E2,E



Return bend HT
Positions: C4-C3,D2-D3,D3-
D4,D4-C4

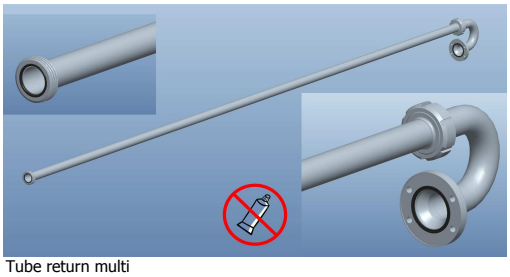

Tube return multi
Part No.: 6-99035338
Positions: E5,D1
Part No.: 6-164827501
Positions: D5,E1

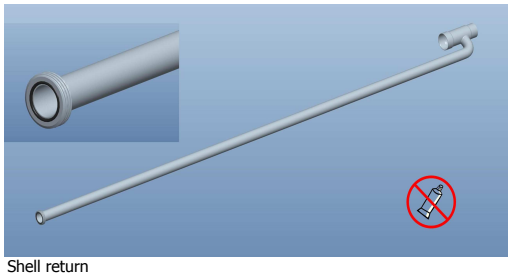

Shell return
Part No.: 6-99035374
Positions: B1,C5,F6



Shell connection 0 degrees
Part No.: 6-99035374
Positions: E1



Shell connection 90 degrees
Part No.: 6-99035374
Positions: A3,A4,A5,A6,E6,F1

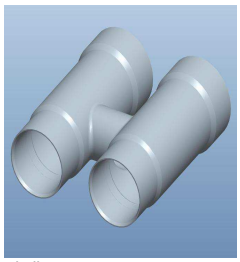

Shell interconnection CM
Positions: A3-B3,A5-A6,B3-
B2,B4-A4,B5-B4,B6-B5,C6-
B6,D5-D6,D6-C6,E2-E1,E3-
E2,E4-E3,F1-F2,F2-F3,F3-F4,F4
-F4

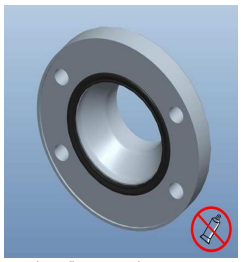

Product flange multi
Part No.: 6-164827501
Positions:
A3,A4,A5,A6,B2,E6,E6,F1

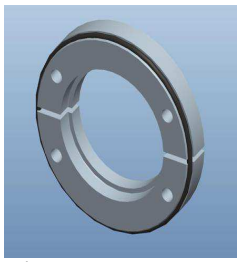

Split ring
Part No.: 6-99032224
Positions:
E1,E2,E3,E4,F1,F2,F3,F4,A3,B2
,B3,A4,B4,B5,B6,C6,D5,D6,A5,
A6,E6

Noise Emission

TechPub_2614345_0106 - TeM_1228490_0101.fm

This page intentionally left blank

TechPub_2614345_0106 - TeM_1228490_0101.fm

Noise emission values in accordance with ISO 4871.2 . . . . . 1 - 5

Declared dual-number noise emission values in accordance with ISO 4871 . . . . . 1 - 7

TechPub_2614345_0106 - TeM_1228490_0101.fm

This page intentionally left blank

TechPub_2614345_0106 - TeM_1228490_0101.fm

Noise emission values in accordance with ISO 4871.2

Measuring method: In accordance with SIS 3746.

Machine type	**Tetra Therm® Aseptic VTIS with F-vessel (Capacity 2.000 - 15.000 l/h)**

Operation mode	Emission sound pressure level L_{pA} *		Sound power level L_{wA} **	
	Measured value dBA ***	Declared value dBA	Measured value dBA ***	Declared value dBA
Heating	87 (7)	94	106 (5)	111
Presterilisation	85 (7)	92	104 (5)	109
Production	90 (7)	97	108 (5)	113
Cleaning	90 (7)	97	107 (5)	112

* Values determined according to ISO/DIS 11204
** Values determined according to ISO/DIS 3746
*** Verifying correction within brackets

Description	**Measured value**
Peak sound pressure	< 63 Pa (130 dB(C))
Background noise	60-65 dB(A)
Environment correction A/S	3600/180 =20

(Cont'd)

TechPub_2614345_0106 - TeM_1228490_0101.fm

Noise emission values in accordance with ISO 4871.2

(Cont'd)

Machinetype	**Tetra Therm® Aseptic VTIS with F-vessel (Capacity 15.000 - 24.000 l/h)**

Operation mode	Emission sound pressure level L_{pA} *		Sound power level L_{wA} **	
	Measured value dBA ***	Declared value dBA	Measured value dBA ***	Declared value dBA
Heating	95 (7)	102	112 (5)	117
Presterilisation	95 (7)	102	112 (5)	117
Production	95 (7)	102	112 (5)	117
Cleaning	90 (7)	97	107 (5)	112

* Values determined according to ISO/DIS 11204
** Values determined according to ISO/DIS 3746
*** Verifying correction within brackets

Description	Measured value
Peak sound pressure	< 63 Pa (130 dB(C))
Background noise	65 dB(A)
Environment correction A/S	3600/200 = 18

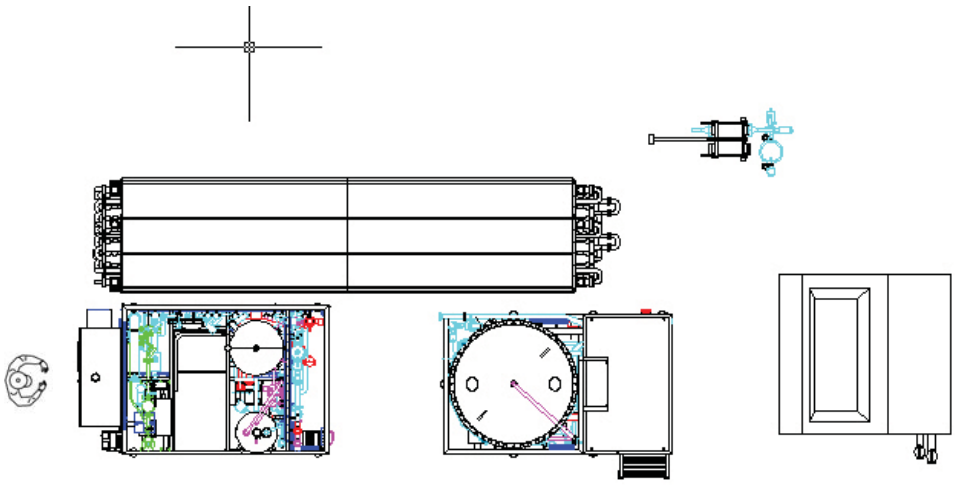

TechPub_2614345_0106 - TeM_1228490_0101.fm

Declared dual-number noise emission values in accordance with ISO 4871

Machine: Tetra Therm® Aseptic VTIS with a S-vessel and option infusion included.

Status: Normal production

Values determined using the basic standard ISO 11204 (Engineering method)	
Measured A-weighted Emission Sound Pressure Level, LpA (ref. 20 ìPa) at the operator position A	78 dB (A)
Uncertainty factor KpA	2.5 dB (A)
Values determined using the basic standard ISO 3746 (Survey method)	
Measured A-weighted Sound Power Level, LWA: (ref. 1pW)	100.5 dB (A)
Uncertainty factor KWA	4 dB (A)

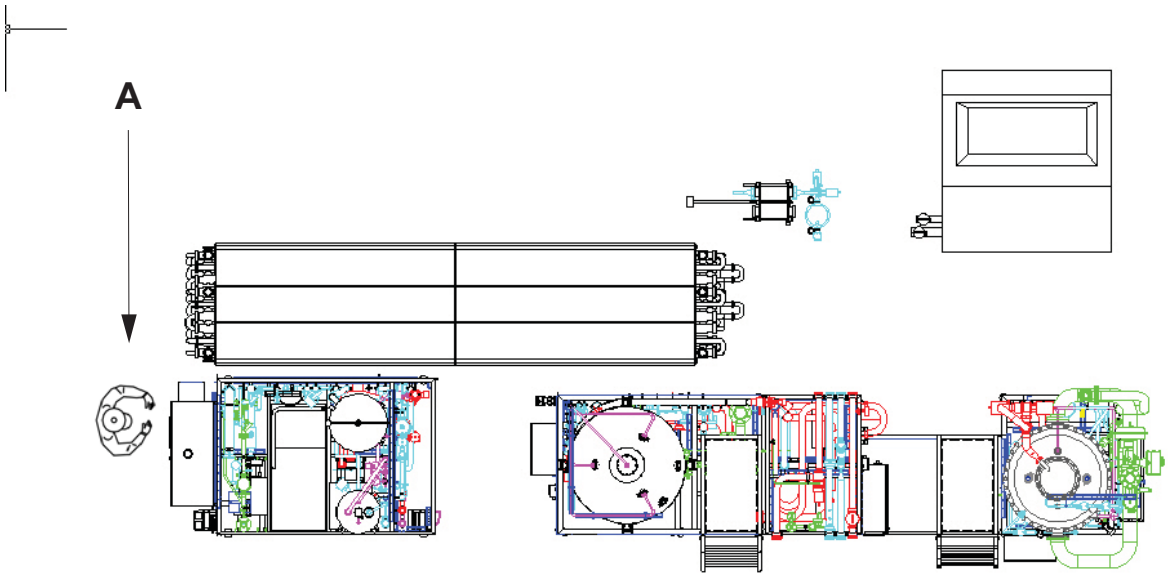

TechPub_2614345_0106 - TeM_1228490_0101.fm

Machine: Tetra Therm® Aseptic VTIS with a S-vessel.
Status: Machine running in normal production with 22000 l/h

Values determined using the basic standard ISO 11204 (Engineering method)	
Measured A-weighted Emission Sound Pressure Level, LpA (ref. 20 ìPa) at the operator position A	74 dB (A)
Uncertainty factor KpA	5 dB (A)
Values determined using the basic standard ISO 3746 (Survey method)	
Measured A-weighted Sound Power Level, LWA: (ref. 1pW)	103 dB (A)
Uncertainty factor KWA	4 dB (A)

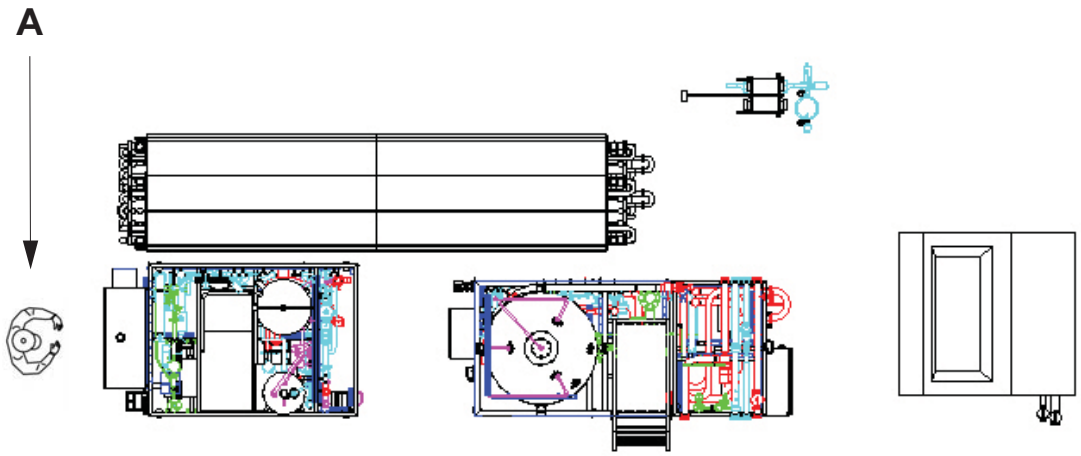

TechPub_2614345_0106 - TeM_1228490_0101.fm

Tetra Pak

Tetra Pak

Production configuration PC5844130774

Product/Model: **Tetra Therm Aseptic VTIS**
Issued by: **Henrik Urban**
Rev:
Description of rev:

Serial number: **T5844130774**
Issue date: **2016-08-02**
Date of rev:

Company name: **Tetra Pak**
Approval by:
Approval of rev:

x=Selected option
o=Selected from HMI
p=Selected by product

					1) o	1) o	1) o	o				o	o	o	o	p	o	o	
No:	Product	Product data	Temp. program °C	Capacity l/h	HC 4 sec	HC 4 sec	HC 30 sec	Stab. HC 20 sec		Aseptic Homog.	SPHC 360s		Cooler THE	Cooler PHE		AFM	Tetra Alsafe	Notes
	Injection Mode																	
1.	White Milk	#4960	5-80-150-81-65-20	11000	x			o		x	o		o				x	
2.	White Milk	#4960	5-80-150-81-65-20	8000	x			o		x	o		o				x	**1) Only possible to select one holding tube at the same time**
3.	White Milk	#4960	5-80-140-81-65-20	11000	x			o		x	o		o				x	
4.	White Milk	#4960	5-80-140-81-65-20	8000	x			o		x	o		o				x	
5.	Toddler Milk	#7206	5-80-150-81-65-20	11000	x			o		x	o		o				x	**Note: Holding cell time corresponds to max capacities**
6.	Toddler Milk	#7206	5-80-150-81-65-20	8000	x			o		x	o		o				x	
7.	Toddler Milk	#7206	5-80-140-81-65-20	11000	x			o		x	o		o				x	
8.	Toddler Milk	#7206	5-80-140-81-65-20	8000	x			o		x	o		o				x	
6.																		

Pressure vessel code: PED

Media Supply

	Temperature [°C]
Ice water, IW	2
Tower water, TW	28
Cold water, CW	

Tetra Pak

Connection data CD5844130774

Product/Model	**Tetra Therm Aseptic VTIS**	Tetra Therm Aseptic VTIS	**T5844130774**	T5844130774 **Tetra Pak**	Tetra Pak
Issued by:	**Henrik Urban**	Issue date:	**2016-06-29**	Approval by:	
Rev:	**0**	Date of rev:		Approval of rev:	
Description of rev:					

Notes:

Consumption rates at (l/h): 15000 l/h

Plant volume = abt (l): 1600
(volume incl enzymatic holding cell)

CIP Flow High Temp (140°C), (l/h): 11000 l/h
CIP Flow Low Temp (85°C), (l/h): 11000 l/h

	Temp.	Concentrate	Litre to add
Caustic NaOH:	140°C	2,0%	92,3
Acid HNO3:	85°C	1,0%	32,3

Important information:

The consumption values given are the nominal values when the unit is in balance and cleaned. The consumptions can during short periods be higher.
If for instance a disturbance have to be controlled by the control system, there have to be an over capacity in the media system.
During heating up and cooling down when control valves is fully opened the consumptions will be higher than the nominal values given.
Due to the above the media system have to be dimensioned with a certain over capacity of 50 to 100%.

Operating and Design parameters:

Media	Operating pressure Bar(g)	Operating temperature °C	Design pressure (PS) ** Bar(g)	Design temperature (TS) °C		Notes
Steam 7 bar	7,0	170	8,0	175		Dry, Saturated Steam. See media requirements in TeM.
Steam 3 bar	3,0	144	3,5	148		Dry, Saturated Steam. See media requirements in TeM.
Potable Water	3,0	xx	4,0	xx		See media requirements in TeM
Cooling Water	3,0	xx	4,0	xx		See media requirements in TeM
Tower Water	3,0	xx	4,0	xx		See media requirements in TeM
Ice Water	3,0	xx	4,0	xx		See media requirements in TeM
Caustic, NaOH	1,0	xx	3,0	xx		See media requirements in TeM
Acid, HNO_3	1,0	xx	3,0	xx		See media requirements in TeM
Instrument Air	6,0	-	7,0	-		See media requirements in TeM
Sanitary Air	6,0	-	7,0	-		See media requirements in TeM

**** Design pressure is the maximum pressure for which the equipment is designed. This pressure may not be exceeded why a safety system guard (e.g. safety valve) must be installed on the media supp**

Consumption data:

Label/ Conn. Pos	Media	Pressure, Voltage / Hz	Capacity/Consumption	Outlet/Return temperature	Notes
V44	Steam	700 kPa_g (7 bar_g ±0,1bar)	315 kg/h		Condensate to boiler. Toddler milk@11000l/h, 150°C
V44	Steam	700 kPa_g (7 bar_g ±0,1bar)	350 kg/h		Condensate to boiler. Sterile water flush@15000l/h, 150°C
V344	Steam	700 kPa_g (7 bar_g ±0,1bar)	1500 kg/h		Toddler milk@11000l/h, 150°C
V344	Steam	700 kPa_g (7 bar_g ±0,1bar)	2100 kg/h		Sterile water flush@15000l/h, 150°C
V323	Steam	700 kPa_g (7 bar_g)	15 kg/h		
V811	Steam	300 kPa_g (3 bar_g)	27 kg/h		Aseptic homogeniser
V66	Potable water	300 kPa_g (3 bar_g), appr 15-30°C	2 m3/h		During start-up and in cooling steps
V13	Product	300 kPa_g (3 bar_g)			
V14	Potable water	300 kPa_g (3 bar_g)	13 m3/h		During rinse steps (1,25 * CIP flow rate)
V328	Seal water	300 kPa_g (3 bar_g), appr 15-30°C	0,1 m3/h		M4
V329	Seal water	300 kPa_g (3 bar_g), appr 15-30°C	0,2 m3/h		M311
V810	Seal water	300 kPa_g (3 bar_g), appr 15-30°C	1 m3/h		Aseptic homogeniser
V63	Cooling water	300 kPa_g (3 bar_g), appr 15-30°C	13 m3/h	CWR, 75°C	During pre-sterilisation, Max. backpressure <0,5bar in return
V66	Potable water	300 kPa_g (3 bar_g), appr 15-30°C	2 m3/h		During start-up and in cooling steps

V80	Caustic, $NaOH$	100 kPa (1 bar)	600 l/h	s	M12
V82	Acid, HNO_3	100 kPa (1 bar)	600 l/h		M13
V26/V39	Ice water	300 kPa_g (3 bar_g), 2°C	16 m3/h	IWR, 6°C	During production, 20°C outlet temperature.
V26/V39	Ice water	300 kPa_g (3 bar_g), 2°C	26 m3/h	IWR, 6°C	During sterile water rinse, 25°C outlet temperature.
V381	Ice water	300 kPa_g (3 bar_g), 2°C	32 m3/h	IWR, 6°C	When TW>29°C. Max. backpressure <0,5 bar in return
V391	Tower water	300 kPa_g (3 bar_g), 28°C	48 m3/h	TWR, 53°C	When TW<29°C. Max. backpressure <0,5 bar in return
PC01	Instrument air	600 kPa (6 bar)	100 Nl/min		
	Electrical power	0 (3-phase) / 0	69 kW		Excl. homogeniser
	Electrical power	0 (3-phase) / 0	200 kW		Homogeniser

Tetra Pak

Tetra Pak Processing Components

2016-08-03

Our ref. **166341_1**

Your ref. **T5844130774**

Tetra Spiraflo®

Technical specification **Case Milk @ 11000**

Recommended min. CIP flow	**10310 kg/h**
CIP pressure drop	**390 kPa**

Summary of pressure drop
590 kPa

Section	Flow kg/h	Tube side / Shell side	Temp.prog. °C			Press.drop kPa	Tube type / Number of tubes	Tube material / Shell material
	11230	UHT Milk - 4960	5	→	80	**375**	CM 85/12x16C-6	1.4404/316L
1	11100	Circ. water	19	←	88	100	8	1.4307/304L
	11230	UHT Milk - 4960	85	→	65	**45**	CM 85/12x16S-6	1.4404/316L
2,1	9590	Circ. water	77	←	55	25	3	1.4307/304L
	11230	UHT Milk - 4960	65	→	26	**115**	CM 85/12x16S-6	1.4404/316L
2,2	11100	Circ. water	55	←	19	80	7	1.4307/304L
	11230	UHT Milk - 4960	26	→	20	**35**	CM 85/12x16S-6	1.4404/316L
3	3160	IW	22	←	2	5	2	1.4307/304L
	11000	Ster.water	140	→	85	15	CM 85/12x16S-6	1.4404/316L
4	11890	TW	80	←	28	15	1	1.4307/304L
	11230	UHT Milk - 4960	80	→		**25**	HT 51S (C 85)	1.4404/316L
5							20 s	

Technical specification **Case Milk @ 8000**

Recommended min. CIP flow	**10310 kg/h**
CIP pressure drop	**390 kPa**

Summary of pressure drop
335 kPa

Section	Flow kg/h	Tube side / Shell side	Temp.prog. °C			Press.drop kPa	Tube type / Number of tubes	Tube material / Shell material
	8170	UHT Milk - 4960	5	→	80	**210**	CM 85/12x16C-6	1.4404/316L
1	8100	Circ. water	18	←	87	55	8	1.4307/304L
	8170	UHT Milk - 4960	85	→	65	**25**	CM 85/12x16S-6	1.4404/316L
2,1	6740	Circ. water	78	←	55	15	3	1.4307/304L
	8170	UHT Milk - 4960	65	→	25	**70**	CM 85/12x16S-6	1.4404/316L
2,2	8100	Circ. water	55	←	18	50	7	1.4307/304L
	8170	UHT Milk - 4960	25	→	20	**25**	CM 85/12x16S-6	1.4404/316L
3	1700	IW	22	←	2	5	2	1.4307/304L
	8000	Ster.water	140	→	85	10	CM 85/12x16S-6	1.4404/316L
4	7580	TW	87	←	28	10	1	1.4307/304L
	8170	UHT Milk - 4960	80	→		**15**	HT 51S (C 85)	1.4404/316L
5							27 s	

Technical specification **Case Toddler Milk @ 11000**

Recommended min. CIP flow	**10310 kg/h**
CIP pressure drop	**390 kPa**

Summary of pressure drop
585 kPa

Section	Flow kg/h	Tube side / Shell side	Temp.prog. °C			Press.drop kPa	Tube type / Number of tubes	Tube material / Shell material
	11350	Infant Formula - 7206	5	→	80	**370**	CM 85/12x16C-6	1.4404/316L
1	11100	Circ. water	17	←	89	100	8	1.4307/304L
	11350	Infant Formula - 7206	85	→	65	**50**	CM 85/12x16S-6	1.4404/316L
2,1	10020	Circ. water	76	←	55	25	3	1.4307/304L
	11350	Infant Formula - 7206	65	→	25	**115**	CM 85/12x16S-6	1.4404/316L
2,2	11100	Circ. water	55	←	17	80	7	1.4307/304L
	11350	Infant Formula - 7206	25	→	20	**35**	CM 85/12x16S-6	1.4404/316L
3	2900	IW	22	←	2	5	2	1.4307/304L
	11000	Ster.water	140	→	85	15	CM 85/12x16S-6	1.4404/316L
4	11890	TW	80	←	28	15	1	1.4307/304L
	11350	Infant Formula - 7206	80	→		**30**	HT 51S (C 85)	1.4404/316L
5							20 s	

Tetra Pak Processing Components
Ruben Rausings gata
SE-221 86 Lund
Sweden

Alexander Sonesson
+46 46 36 1688

Tetra Pak

Tetra Pak Processing Components

2016-08-03

Our ref. **166341_1**

Your ref. **T5844130774**

Tetra Spiraflo®

Technical specification **Case Toddler Milk @ 8000**

Recommended min. CIP flow	**10310 kg/h**
CIP pressure drop	**390 kPa**

Summary of pressure drop
335 kPa

Section	Flow kg/h	Tube side / Shell side	Temp.prog. °C			Press.drop kPa	Tube type / Number of tubes	Tube material / Shell material
1	8250 8100	Infant Formula - 7206 Circ. water	5 16	→ ←	80 88	**210** 60	CM 85/12x16C-6 8	1.4404/316L 1.4307/304L
2,1	8250 7020	Infant Formula - 7206 Circ. water	85 78	→ ←	65 55	**30** 15	CM 85/12x16S-6 3	1.4404/316L 1.4307/304L
2,2	8250 8100	Infant Formula - 7206 Circ. water	65 55	→ ←	24 16	**65** 50	CM 85/12x16S-6 7	1.4404/316L 1.4307/304L
3	8250 1470	Infant Formula - 7206 IW	24 22	→ ←	20 2	**20** 5	CM 85/12x16S-6 2	1.4404/316L 1.4307/304L
4	8000 7580	Ster.water TW	140 87	→ ←	85 28	10 10	CM 85/12x16S-6 1	1.4404/316L 1.4307/304L
5	8250	Infant Formula - 7206	80	→		**15**	HT 51S (C 85) 28 s	1.4404/316L

Technical specification **Case Water @15000**

Recommended min. CIP flow	**10310 kg/h**
CIP pressure drop	**390 kPa**

Summary of pressure drop
810 kPa

Section	Flow kg/h	Tube side / Shell side	Temp.prog. °C			Press.drop kPa	Tube type / Number of tubes	Tube material / Shell material
1	15000 15000	Water Circ. water	16 25	→ ←	80 89	**515** 165	CM 85/12x16C-6 8	1.4404/316L 1.4307/304L
2,1	15000 15000	Water Circ. water	84 77	→ ←	67 60	**55** 50	CM 85/12x16S-6 3	1.4404/316L 1.4307/304L
2,2	15000 15000	Water Circ. water	67 60	→ ←	32 25	**145** 125	CM 85/12x16S-6 7	1.4404/316L 1.4307/304L
3	15000 8870	Water CW	32 22	→ ←	20 2	**50** 20	CM 85/12x16S-6 2	1.4404/316L 1.4307/304L
4	15000 19280	Ster.water TW	140 71	→ ←	85 28	20 25	CM 85/12x16S-6 1	1.4404/316L 1.4307/304L
5	15000	Water	80	→		**35**	HT 51S (C 85) 15 s	1.4404/316L

Technical specification **CIP Case**

Recommended min. CIP flow	**10310 kg/h**
CIP pressure drop	**390 kPa**

Section	Flow kg/h	Tube side / Shell side	Temp.prog. °C	v m/s	Press.drop kPa	Tube type / Number of tubes
1	10310	CIP	70	1.5	250	CM 85/12x16C-6 8
2,1	10310	CIP	70	1.5	30	CM 85/12x16S-6 3
2,2	10310	CIP	70	1.5	70	CM 85/12x16S-6 7
3	10310	CIP	70	1.5	20	CM 85/12x16S-6 2
4	10310	CIP	70	1.5	10	CM 85/12x16S-6 1
5	10310	CIP	70	1.63	20	HT 51S (C 85)

Tetra Pak Processing Components
Ruben Rausings gata
SE-221 86 Lund
Sweden

Alexander Sonesson
+46 46 36 1688

Alfa Laval, Plate Heat Exchanger

Model : MS10-SM

Manufacturing no.	30109-16227	Date	2016-08-16 798579
Plate Heat Exchanger Type: Drawing no:	MS10-SM	Quantity:	1
Customer: 47024 - TETRA PAK PROCESSING COMP.AB		Ref: 914117377/T5844130774rev1	
Agent:		Ref: 914117377/T5844130774	
Supplier: ALFA LAVAL		Ref: O16-45744	

Plates with parallel flow.

The plate pack is tightened to 1232 mm.

Always observe plate from its gasket side. In the upper part of the plate a ten figure part number is stamped. In the same area you will also find the letter 'A'. This means that the other end of the plate is denominated 'B'. Plates with four port holes are normally not stamped with a part number; they are identified by the type marking.
The plates are assembled, counting from the frame plate to the pressure plate, in sequence stated below with the gasket side facing the frame plate. Plates in the list marked with a 'B' are mounted with the stamped 'A' facing downwards. 'H'/'L' or '1'/'2' correspond to the pattern on the plate.

For information about installation, running, cleaning etc. see the instruction book.

Measurements (see drawing): mm

A =	1232	AA =	282
LT =	2060	AB =	950
C =	2370		

Net weight:
673 kg

Liquid volume:
250 l

Design pressure:
16 bar

Total Area:
54.6 m²

Connection standard:	SMS 76
Pressure Vessel Code:	PED
PED Risk Category:	3

	- Side 1 -	- Side 2 -	
Test pressure:	22.9	22.9	bar
Design temperature:	150.0	150.0	°C
Min temperature:	0.0	0.0	°C

Bolts:	M30
	Protection sheet

Section Information

Section Area:	Flowrate kg/h	Media	FDG	Temperature progr. (°C)	dP kPa	Vol. (l):	Inlet	Outlet	Grouping:
1	**10640**	**Circ Water**	**2**	**30.0 -> 30.0**	**0.7076**	**25**	**A12**	**S1**	**1*25MH**
10.78 m²		**Ice Water**	**2**	**<-**	**0.4385**	**25**	**S4**	**A13**	**1*25ML**
2	**10640**	**Circ Water**	**2**	**76.0 -> 30.0**	**2.777**	**100**	**T1**	**A11**	**4*25MH**
43.78 m²	**15950**	**Tower Water**	**2**	**58.7 <- 28.0**	**5.839**	**100**	**A14**	**T4**	**4*25ML**

Alternative: 1

Section Area:	Flowrate kg/h	Media	Temperature progr. (°C)	dP kPa	Vol. (l):	Inlet	Outlet	Grouping:
1	**25200**	**Circ Water**	**30.0 -> 30.0**	**3.547**	**25**	**A12**	**S1**	**1*25MH**
		Tower Water	**<-**	**3.604**	**25**	**S4**	**A13**	**1*25ML**
2	**25200**	**Circ Water**	**76.0 -> 30.0**	**13.99**	**100**	**T1**	**A11**	**4*25MH**
	48040	**Tower Water**	**52.1 <- 28.0**	**46.68**	**100**	**A14**	**T4**	**4*25ML**

Alternative: 2

Section Area:	Flowrate kg/h	Media	Temperature progr. (°C)	dP kPa	Vol. (l):	Inlet	Outlet	Grouping:
1	**10640**	**Circ Water**	**35.0 -> 30.0**	**0.7011**	**25**	**A12**	**S1**	**1*25MH**
	1652	**Tower Water**	**34.1 <- 2.0**	**0.02877**	**25**	**S4**	**A13**	**1*25ML**
2	**10640**	**Circ Water**	**76.0 -> 35.0**	**2.745**	**100**	**T1**	**A11**	**4*25MH**
	13490	**Tower Water**	**64.3 <- 32.0**	**4.217**	**100**	**A14**	**T4**	**4*25ML**

Alternative: 3

Section Area:	Flowrate kg/h	Media	Temperature progr. (°C)	dP kPa	Vol. (l):	Inlet	Outlet	Grouping:
1	**25200**	**Circ Water**	**35.0 -> 30.0**	**3.518**	**25**	**A12**	**S1**	**1*25MH**
	4219	**Ice Water**	**31.8 <- 2.0**	**0.1246**	**25**	**S4**	**A13**	**1*25ML**
2	**25200**	**Circ Water**	**76.0 -> 35.0**	**13.84**	**100**	**T1**	**A11**	**4*25MH**
	38110	**Tower Water**	**59.1 <- 32.0**	**29.77**	**100**	**A14**	**T4**	**4*25ML**

Measurements

Manufacturing no.	30109-16227	Date	2016-08-16 798579
Plate Heat Exchanger Type:	MS10-SM	Quantity:	1
Drawing no:			

Customer:	Ref:
47024 - TETRA PAK PROCESSING COMP.AB	914117377/T5844130774rev1

Total A-measurement:	1232 mm	Total weight:	673 Kg
A-measure + free space:	1709 mm	Total volume:	250 l
C - measure:	2370 mm		
B - Measure	2160 mm	H - Measure:	2100 mm

Connection standard: SMS 76

Per Section

Section No.	Plate Area: m²	Volume in ltr: - Side 1 -	- Side 2 -	A-measure: mm
AA	10.78	25	25	282
AB	43.78	100	100	950

Carrying Bars

Carrying Bar length:	2100 mm
Extendible by (plates):	3 Pcs

Tightening Bolts

Tightening Bolt length:	2060 mm
Tightening Bolt dimension:	M30
Extendible by (plates):	17 Pcs

Centre of gravity:	Empty	Filled
Horizontal:	718 mm	526 mm

Foundation Load:	Opened	Operating	(N)
Support Column side:	3705	2215	
Frame side:	4381	6807	

Connection Information

Connection on the FRAME PLATE	
Connection at **S1** Connection block: M10 FHC CF03 Fitting on connection: SMS 76 M10 FHC FI28	Connection at **S4** Connection block: M10 FHC CF03 Fitting on connection: SMS 76 M10 FHC FI28
Connection at **S2** Connection block:	Connection at **S3** Connection block:

CONNECTION PLATE A1 M10 FHC CC01	
Corner at **A11** Corner block: M10 FHC CO10 Fitting on horizontal connection: SMS 76 M10 FHC FI28	Corner at **A14** Corner block: M10 FHC CO10 Fitting on horizontal connection: SMS 76 M10 FHC FI28
Corner at **A12** Corner block: M10 FHC CO10 Fitting on horizontal connection: SMS 76 M10 FHC FI28	Corner at **A13** Corner block: M10 FHC CO10 Fitting on horizontal connection: SMS 76 M10 FHC FI28

Connection on the PRESSURE PLATE	
Connection at **T1** Connection block: M10 FHC CP03 Fitting on connection: SMS 76 M10 FHC FI28	Connection at **T4** Connection block: M10 FHC CP03 Fitting on connection: SMS 76 M10 FHC FI28
Connection at **T2** Connection block:	Connection at **T3** Connection block:

30109-16227

Alfa Laval, Plate Heat Exchanger 2016-08-16
Channel Plate Installation Description

Customer: 47024 - TETRA PAK PROCESSING COMP.ABSU Order No: O16-45744-10
Model : MS10-SM Serial No: 30109-16227
Customer PO: 914117377/T5844130774rev1

Plate material and Thickness: ALLOY 316 0.50 mm

A Dimension: 1232 mm

Sealing material: EPDMFF Clip-on

Port hole with flow on the gasket side: U
Port hole sealed with O-ring: O
Plates are assembled with the gasket side facing the frame plate.

Plate no.	Plate code no.	Plate Pattern	Punched corner of the plate upper left S1		lower left S2	lower right S3		upper right S4	Spare part number incl. gasket
	FRAME PLATE Section 1		=<=					=<=	
1	367317 0091	M10 M2 B	O					O	369940 7691
2	367217 0010	M10 M1 A	O			U	--<---	U	369940 7410
3	M10 M2	M10 M2 B	U	--<---	U	O		O	369940 7203
4	M10 M1	M10 M1 A	O		O	U	--<---	U	369940 7003
5	M10 M2	M10 M2 B	U	--<---	U	O		O	369940 7203
6	M10 M1	M10 M1 A	O		O	U	--<---	U	369940 7003
7	M10 M2	M10 M2 B	U	--<---	U	O		O	369940 7203
8	M10 M1	M10 M1 A	O		O	U	--<---	U	369940 7003
9	M10 M2	M10 M2 B	U	--<---	U	O		O	369940 7203
10	M10 M1	M10 M1 A	O		O	U	--<---	U	369940 7003
11	M10 M2	M10 M2 B	U	--<---	U	O		O	369940 7203
12	M10 M1	M10 M1 A	O		O	U	--<---	U	369940 7003
13	M10 M2	M10 M2 B	U	--<---	U	O		O	369940 7203
14	M10 M1	M10 M1 A	O		O	U	--<---	U	369940 7003
15	M10 M2	M10 M2 B	U	--<---	U	O		O	369940 7203
16	M10 M1	M10 M1 A	O		O	U	--<---	U	369940 7003
17	M10 M2	M10 M2 B	U	--<---	U	O		O	369940 7203
18	M10 M1	M10 M1 A	O		O	U	--<---	U	369940 7003
19	M10 M2	M10 M2 B	U	--<---	U	O		O	369940 7203
20	M10 M1	M10 M1 A	O		O	U	--<---	U	369940 7003
21	M10 M2	M10 M2 B	U	--<---	U	O		O	369940 7203
22	M10 M1	M10 M1 A	O		O	U	--<---	U	369940 7003
23	M10 M2	M10 M2 B	U	--<---	U	O		O	369940 7203
24	M10 M1	M10 M1 A	O		O	U	--<---	U	369940 7003
25	M10 M2	M10 M2 B	U	--<---	U	O		O	369940 7203
26	M10 M1	M10 M1 A	O		O	U	--<---	U	369940 7003
27	M10 M2	M10 M2 B	U	--<---	U	O		O	369940 7203
28	M10 M1	M10 M1 A	O		O	U	--<---	U	369940 7003
29	M10 M2	M10 M2 B	U	--<---	U	O		O	369940 7203
30	M10 M1	M10 M1 A	O		O	U	--<---	U	369940 7003
31	M10 M2	M10 M2 B	U	--<---	U	O		O	369940 7203
32	M10 M1	M10 M1 A	O		O	U	--<---	U	369940 7003

33	M10 M2	M10 M2 B		U	--<---	U	O		O	369940 7203
34	M10 M1	M10 M1 A		O		O	U	--<---	U	369940 7003
35	M10 M2	M10 M2 B		U	--<---	U	O		O	369940 7203
36	M10 M1	M10 M1 A		O		O	U	--<---	U	369940 7003
37	M10 M2	M10 M2 B		U	--<---	U	O		O	369940 7203
38	M10 M1	M10 M1 A		O		O	U	--<---	U	369940 7003
39	M10 M2	M10 M2 B		U	--<---	U	O		O	369940 7203
40	M10 M1	M10 M1 A		O		O	U	--<---	U	369940 7003
41	M10 M2	M10 M2 B		U	--<---	U	O		O	369940 7203
42	M10 M1	M10 M1 A		O		O	U	--<---	U	369940 7003
43	M10 M2	M10 M2 B		U	--<---	U	O		O	369940 7203
44	M10 M1	M10 M1 A		O		O	U	--<---	U	369940 7003
45	M10 M2	M10 M2 B		U	--<---	U	O		O	369940 7203
46	M10 M1	M10 M1 A		O		O	U	--<---	U	369940 7003
47	M10 M2	M10 M2 B		U	--<---	U	O		O	369940 7203
48	M10 M1	M10 M1 A	**24 2B**	O		O	U	--<---	U	369940 7003
49	M10 M2	M10 M2 B	**23 1A**	U	--<---	U	O		O	369940 7203
50	**367217 0006**	M10 M1 A		O		O	U	--<---		369940 7406
51	**367317 0004**	M10 M2 B			--<---	U	O			369940 7604
52	**367317 0051**	M10 M2 A				O	O			369940 7651
						=>=	**=>=**			
A1	CONNECTION PLATE									
	Section 2			**=<=**					**=<=**	
1	**367317 0091**	M10 M2 B		O					O	369940 7691
2	**367217 0010**	M10 M1 A		O			U	--<---	U	369940 7410
3	M10 M2	M10 M2 B		U	--<---	U	O		O	369940 7203
4	M10 M1	M10 M1 A		O		O	U	--<---	U	369940 7003
5	M10 M2	M10 M2 B		U	--<---	U	O		O	369940 7203
6	M10 M1	M10 M1 A		O		O	U	--<---	U	369940 7003
7	M10 M2	M10 M2 B		U	--<---	U	O		O	369940 7203
8	M10 M1	M10 M1 A		O		O	U	--<---	U	369940 7003
9	M10 M2	M10 M2 B		U	--<---	U	O		O	369940 7203
10	M10 M1	M10 M1 A		O		O	U	--<---	U	369940 7003
11	M10 M2	M10 M2 B		U	--<---	U	O		O	369940 7203
12	M10 M1	M10 M1 A		O		O	U	--<---	U	369940 7003
13	M10 M2	M10 M2 B		U	--<---	U	O		O	369940 7203
14	M10 M1	M10 M1 A		O		O	U	--<---	U	369940 7003
15	M10 M2	M10 M2 B		U	--<---	U	O		O	369940 7203
16	M10 M1	M10 M1 A		O		O	U	--<---	U	369940 7003
17	M10 M2	M10 M2 B		U	--<---	U	O		O	369940 7203
18	M10 M1	M10 M1 A		O		O	U	--<---	U	369940 7003
19	M10 M2	M10 M2 B		U	--<---	U	O		O	369940 7203
20	M10 M1	M10 M1 A		O		O	U	--<---	U	369940 7003
21	M10 M2	M10 M2 B		U	--<---	U	O		O	369940 7203
22	M10 M1	M10 M1 A		O		O	U	--<---	U	369940 7003
23	M10 M2	M10 M2 B		U	--<---	U	O		O	369940 7203
24	M10 M1	M10 M1 A		O		O	U	--<---	U	369940 7003
25	M10 M2	M10 M2 B		U	--<---	U	O		O	369940 7203
26	M10 M1	M10 M1 A		O		O	U	--<---	U	369940 7003
27	M10 M2	M10 M2 B		U	--<---	U	O		O	369940 7203
28	M10 M1	M10 M1 A		O		O	U	--<---	U	369940 7003
29	M10 M2	M10 M2 B		U	--<---	U	O		O	369940 7203
30	M10 M1	M10 M1 A		O		O	U	--<---	U	369940 7003
31	M10 M2	M10 M2 B		U	--<---	U	O		O	369940 7203
32	M10 M1	M10 M1 A		O		O	U	--<---	U	369940 7003
33	M10 M2	M10 M2 B		U	--<---	U	O		O	369940 7203
34	M10 M1	M10 M1 A		O		O	U	--<---	U	369940 7003
35	M10 M2	M10 M2 B		U	--<---	U	O		O	369940 7203
36	M10 M1	M10 M1 A		O		O	U	--<---	U	369940 7003
37	M10 M2	M10 M2 B		U	--<---	U	O		O	369940 7203
38	M10 M1	M10 M1 A		O		O	U	--<---	U	369940 7003
39	M10 M2	M10 M2 B		U	--<---	U	O		O	369940 7203

40	M10 M1	M10 M1 A		O		O	U	--<---	U	369940 7003
41	M10 M2	M10 M2 B		U	--<---	U	O		O	369940 7203
42	M10 M1	M10 M1 A		O		O	U	--<---	U	369940 7003
43	M10 M2	M10 M2 B		U	--<---	U	O		O	369940 7203
44	M10 M1	M10 M1 A		O		O	U	--<---	U	369940 7003
45	M10 M2	M10 M2 B		U	--<---	U	O		O	369940 7203
46	M10 M1	M10 M1 A		O		O	U	--<---	U	369940 7003
47	M10 M2	M10 M2 B		U	--<---	U	O		O	369940 7203
48	M10 M1	M10 M1 A	**24 2B**	O		O	U	--<---	U	369940 7003
49	M10 M2	M10 M2 B	**23 1A**	U	--<---	U	O		O	369940 7203
50	**367217 0006**	M10 M1 A		O		O	U	--<---		369940 7406
51	**367317 0004**	M10 M2 B			--<---	U	O			369940 7604
52	**367217 0005**	M10 M1 A				O	U	--->--	U	369940 7405
53	M10 M2	M10 M2 B		U	--->--	U	O		O	369940 7203
54	M10 M1	M10 M1 A		O		O	U	--->--	U	369940 7003
55	M10 M2	M10 M2 B		U	--->--	U	O		O	369940 7203
56	M10 M1	M10 M1 A		O		O	U	--->--	U	369940 7003
57	M10 M2	M10 M2 B		U	--->--	U	O		O	369940 7203
58	M10 M1	M10 M1 A		O		O	U	--->--	U	369940 7003
59	M10 M2	M10 M2 B		U	--->--	U	O		O	369940 7203
60	M10 M1	M10 M1 A		O		O	U	--->--	U	369940 7003
61	M10 M2	M10 M2 B		U	--->--	U	O		O	369940 7203
62	M10 M1	M10 M1 A		O		O	U	--->--	U	369940 7003
63	M10 M2	M10 M2 B		U	--->--	U	O		O	369940 7203
64	M10 M1	M10 M1 A		O		O	U	--->--	U	369940 7003
65	M10 M2	M10 M2 B		U	--->--	U	O		O	369940 7203
66	M10 M1	M10 M1 A		O		O	U	--->--	U	369940 7003
67	M10 M2	M10 M2 B		U	--->--	U	O		O	369940 7203
68	M10 M1	M10 M1 A		O		O	U	--->--	U	369940 7003
69	M10 M2	M10 M2 B		U	--->--	U	O		O	369940 7203
70	M10 M1	M10 M1 A		O		O	U	--->--	U	369940 7003
71	M10 M2	M10 M2 B		U	--->--	U	O		O	369940 7203
72	M10 M1	M10 M1 A		O		O	U	--->--	U	369940 7003
73	M10 M2	M10 M2 B		U	--->--	U	O		O	369940 7203
74	M10 M1	M10 M1 A		O		O	U	--->--	U	369940 7003
75	M10 M2	M10 M2 B		U	--->--	U	O		O	369940 7203
76	M10 M1	M10 M1 A		O		O	U	--->--	U	369940 7003
77	M10 M2	M10 M2 B		U	--->--	U	O		O	369940 7203
78	M10 M1	M10 M1 A		O		O	U	--->--	U	369940 7003
79	M10 M2	M10 M2 B		U	--->--	U	O		O	369940 7203
80	M10 M1	M10 M1 A		O		O	U	--->--	U	369940 7003
81	M10 M2	M10 M2 B		U	--->--	U	O		O	369940 7203
82	M10 M1	M10 M1 A		O		O	U	--->--	U	369940 7003
83	M10 M2	M10 M2 B		U	--->--	U	O		O	369940 7203
84	M10 M1	M10 M1 A		O		O	U	--->--	U	369940 7003
85	M10 M2	M10 M2 B		U	--->--	U	O		O	369940 7203
86	M10 M1	M10 M1 A		O		O	U	--->--	U	369940 7003
87	M10 M2	M10 M2 B		U	--->--	U	O		O	369940 7203
88	M10 M1	M10 M1 A		O		O	U	--->--	U	369940 7003
89	M10 M2	M10 M2 B		U	--->--	U	O		O	369940 7203
90	M10 M1	M10 M1 A		O		O	U	--->--	U	369940 7003
91	M10 M2	M10 M2 B		U	--->--	U	O		O	369940 7203
92	M10 M1	M10 M1 A		O		O	U	--->--	U	369940 7003
93	M10 M2	M10 M2 B		U	--->--	U	O		O	369940 7203
94	M10 M1	M10 M1 A		O		O	U	--->--	U	369940 7003
95	M10 M2	M10 M2 B		U	--->--	U	O		O	369940 7203
96	M10 M1	M10 M1 A		O		O	U	--->--	U	369940 7003
97	M10 M2	M10 M2 B		U	--->--	U	O		O	369940 7203
98	M10 M1	M10 M1 A	**24 2B**	O		O	U	--->--	U	369940 7003
99	M10 M2	M10 M2 B	**23 1A**	U	--->--	U	O		O	369940 7203
100	**367217 0009**	M10 M1 A		O		O		--->--	U	369940 7409
101	**367317 0011**	M10 M2 B		U	--->--				O	369940 7611

102	**367217 0010**	M10 M1 A		O			U	--<---	U	369940 7410
103	M10 M2	M10 M2 B		U	--<---	U	O		O	369940 7203
104	M10 M1	M10 M1 A		O		O	U	--<---	U	369940 7003
105	M10 M2	M10 M2 B		U	--<---	U	O		O	369940 7203
106	M10 M1	M10 M1 A		O		O	U	--<---	U	369940 7003
107	M10 M2	M10 M2 B		U	--<---	U	O		O	369940 7203
108	M10 M1	M10 M1 A		O		O	U	--<---	U	369940 7003
109	M10 M2	M10 M2 B		U	--<---	U	O		O	369940 7203
110	M10 M1	M10 M1 A		O		O	U	--<---	U	369940 7003
111	M10 M2	M10 M2 B		U	--<---	U	O		O	369940 7203
112	M10 M1	M10 M1 A		O		O	U	--<---	U	369940 7003
113	M10 M2	M10 M2 B		U	--<---	U	O		O	369940 7203
114	M10 M1	M10 M1 A		O		O	U	--<---	U	369940 7003
115	M10 M2	M10 M2 B		U	--<---	U	O		O	369940 7203
116	M10 M1	M10 M1 A		O		O	U	--<---	U	369940 7003
117	M10 M2	M10 M2 B		U	--<---	U	O		O	369940 7203
118	M10 M1	M10 M1 A		O		O	U	--<---	U	369940 7003
119	M10 M2	M10 M2 B		U	--<---	U	O		O	369940 7203
120	M10 M1	M10 M1 A		O		O	U	--<---	U	369940 7003
121	M10 M2	M10 M2 B		U	--<---	U	O		O	369940 7203
122	M10 M1	M10 M1 A		O		O	U	--<---	U	369940 7003
123	M10 M2	M10 M2 B		U	--<---	U	O		O	369940 7203
124	M10 M1	M10 M1 A		O		O	U	--<---	U	369940 7003
125	M10 M2	M10 M2 B		U	--<---	U	O		O	369940 7203
126	M10 M1	M10 M1 A		O		O	U	--<---	U	369940 7003
127	M10 M2	M10 M2 B		U	--<---	U	O		O	369940 7203
128	M10 M1	M10 M1 A		O		O	U	--<---	U	369940 7003
129	M10 M2	M10 M2 B		U	--<---	U	O		O	369940 7203
130	M10 M1	M10 M1 A		O		O	U	--<---	U	369940 7003
131	M10 M2	M10 M2 B		U	--<---	U	O		O	369940 7203
132	M10 M1	M10 M1 A		O		O	U	--<---	U	369940 7003
133	M10 M2	M10 M2 B		U	--<---	U	O		O	369940 7203
134	M10 M1	M10 M1 A		O		O	U	--<---	U	369940 7003
135	M10 M2	M10 M2 B		U	--<---	U	O		O	369940 7203
136	M10 M1	M10 M1 A		O		O	U	--<---	U	369940 7003
137	M10 M2	M10 M2 B		U	--<---	U	O		O	369940 7203
138	M10 M1	M10 M1 A		O		O	U	--<---	U	369940 7003
139	M10 M2	M10 M2 B		U	--<---	U	O		O	369940 7203
140	M10 M1	M10 M1 A		O		O	U	--<---	U	369940 7003
141	M10 M2	M10 M2 B		U	--<---	U	O		O	369940 7203
142	M10 M1	M10 M1 A		O		O	U	--<---	U	369940 7003
143	M10 M2	M10 M2 B		U	--<---	U	O		O	369940 7203
144	M10 M1	M10 M1 A		O		O	U	--<---	U	369940 7003
145	M10 M2	M10 M2 B		U	--<---	U	O		O	369940 7203
146	M10 M1	M10 M1 A		O		O	U	--<---	U	369940 7003
147	M10 M2	M10 M2 B		U	--<---	U	O		O	369940 7203
148	M10 M1	M10 M1 A	**24 2B**	O		O	U	--<---	U	369940 7003
149	M10 M2	M10 M2 B	**23 1A**	U	--<---	U	O		O	369940 7203
150	**367217 0006**	M10 M1 A		O		O	U	--<---		369940 7406
151	**367317 0004**	M10 M2 B			--<---	U	O			369940 7604
152	**367217 0005**	M10 M1 A				O	U	--->--	U	369940 7405
153	M10 M2	M10 M2 B		U	--->--	U	O		O	369940 7203
154	M10 M1	M10 M1 A		O		O	U	--->--	U	369940 7003
155	M10 M2	M10 M2 B		U	--->--	U	O		O	369940 7203
156	M10 M1	M10 M1 A		O		O	U	--->--	U	369940 7003
157	M10 M2	M10 M2 B		U	--->--	U	O		O	369940 7203
158	M10 M1	M10 M1 A		O		O	U	--->--	U	369940 7003
159	M10 M2	M10 M2 B		U	--->--	U	O		O	369940 7203
160	M10 M1	M10 M1 A		O		O	U	--->--	U	369940 7003
161	M10 M2	M10 M2 B		U	--->--	U	O		O	369940 7203
162	M10 M1	M10 M1 A		O		O	U	--->--	U	369940 7003
163	M10 M2	M10 M2 B		U	--->--	U	O		O	369940 7203

164	M10 M1	M10 M1 A		O		O		U	--->--	U	369940 7003
165	M10 M2	M10 M2 B		U	--->--	U		O		O	369940 7203
166	M10 M1	M10 M1 A		O		O		U	--->--	U	369940 7003
167	M10 M2	M10 M2 B		U	--->--	U		O		O	369940 7203
168	M10 M1	M10 M1 A		O		O		U	--->--	U	369940 7003
169	M10 M2	M10 M2 B		U	--->--	U		O		O	369940 7203
170	M10 M1	M10 M1 A		O		O		U	--->--	U	369940 7003
171	M10 M2	M10 M2 B		U	--->--	U		O		O	369940 7203
172	M10 M1	M10 M1 A		O		O		U	--->--	U	369940 7003
173	M10 M2	M10 M2 B		U	--->--	U		O		O	369940 7203
174	M10 M1	M10 M1 A		O		O		U	--->--	U	369940 7003
175	M10 M2	M10 M2 B		U	--->--	U		O		O	369940 7203
176	M10 M1	M10 M1 A		O		O		U	--->--	U	369940 7003
177	M10 M2	M10 M2 B		U	--->--	U		O		O	369940 7203
178	M10 M1	M10 M1 A		O		O		U	--->--	U	369940 7003
179	M10 M2	M10 M2 B		U	--->--	U		O		O	369940 7203
180	M10 M1	M10 M1 A		O		O		U	--->--	U	369940 7003
181	M10 M2	M10 M2 B		U	--->--	U		O		O	369940 7203
182	M10 M1	M10 M1 A		O		O		U	--->--	U	369940 7003
183	M10 M2	M10 M2 B		U	--->--	U		O		O	369940 7203
184	M10 M1	M10 M1 A		O		O		U	--->--	U	369940 7003
185	M10 M2	M10 M2 B		U	--->--	U		O		O	369940 7203
186	M10 M1	M10 M1 A		O		O		U	--->--	U	369940 7003
187	M10 M2	M10 M2 B		U	--->--	U		O		O	369940 7203
188	M10 M1	M10 M1 A		O		O		U	--->--	U	369940 7003
189	M10 M2	M10 M2 B		U	--->--	U		O		O	369940 7203
190	M10 M1	M10 M1 A		O		O		U	--->--	U	369940 7003
191	M10 M2	M10 M2 B		U	--->--	U		O		O	369940 7203
192	M10 M1	M10 M1 A		O		O		U	--->--	U	369940 7003
193	M10 M2	M10 M2 B		U	--->--	U		O		O	369940 7203
194	M10 M1	M10 M1 A		O		O		U	--->--	U	369940 7003
195	M10 M2	M10 M2 B		U	--->--	U		O		O	369940 7203
196	M10 M1	M10 M1 A		O		O		U	--->--	U	369940 7003
197	M10 M2	M10 M2 B		U	--->--	U		O		O	369940 7203
198	M10 M1	M10 M1 A	**24 2B**	O		O		U	--->--	U	369940 7003
199	M10 M2	M10 M2 B	**23 1A**	U	--->--	U		O		O	369940 7203
200	**367217 0009**	M10 M1 A		O		O			--->--	U	369940 7409
201	**367317 0011**	M10 M2 B		U	--->--					O	369940 7611
202	**367317 0044**	M10 M2 A		O						O	369940 7644
	PRESSURE PLATE			**=>=**						**=>=**	
				T1		T2		T3		T4	

Article No:	Quantity:
369940 7691	2
369940 7410	3
369940 7203	120
369940 7003	115
369940 7406	3
369940 7604	3
369940 7651	1
369940 7405	2
369940 7409	2
369940 7611	2
369940 7644	1
	254

FRAME PLATE

(FIXED)

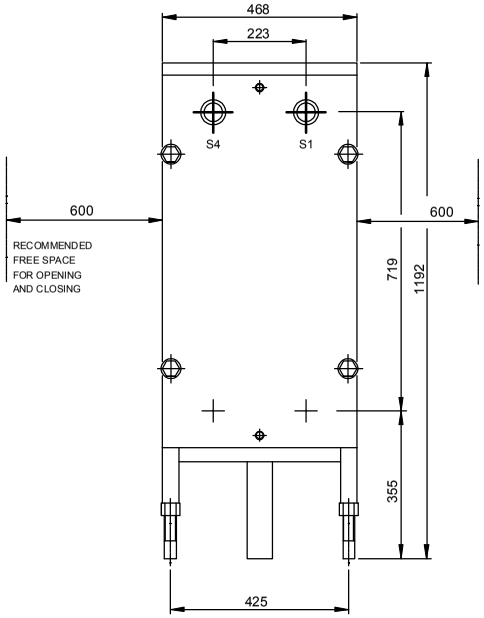

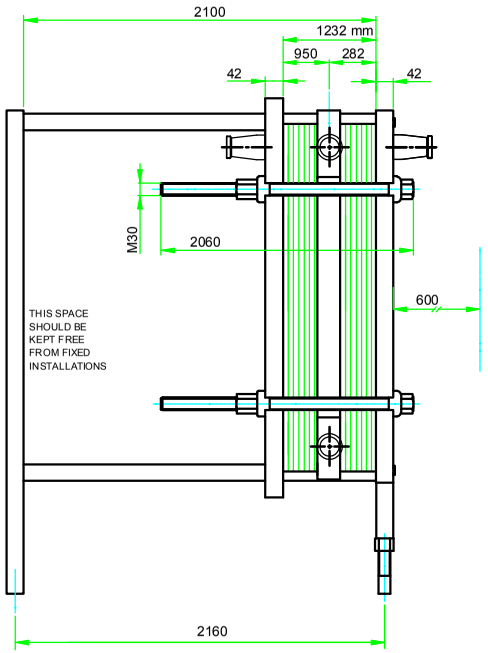

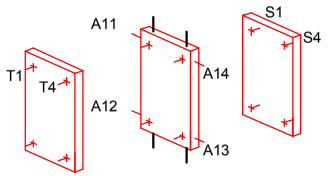

PRESSURE PLATE FRAME PLATE

CONNECTINGPLATE

SMS 101.6/ 76
AISI 316L

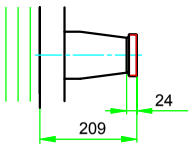

SMS 76
AISI 316L

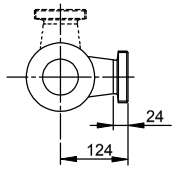

TOTAL LENGTH	2370
TOTAL WIDTH	468
TOTAL HEIGHT	1192

ALL DIMENSIONS IN MILLIMETERS

CUSTOMER	47024 - TETRA PAK PROCESSING COMP.AB
CUSTOMER REF.	
NAME	168238_2
AGENT	
AGENTREF.	/ 914117377/T5844130774
MANUFACT./YEAR	Alfa Laval AB / 2016
SUPPLIER/REF.	OM_SEH / O16-45744-10

ORIGINAL FLOW ALTERNATIVE

NO	SEC.	MEDIA	INLET	OUTLET
1	1	Circ Water	A12	S1
2	1	Ice Water	S4	A13
3	2	Circ Water	T1	A11
4	2	Tower Water	A14	T4

CONSTRUCTION OF ONE UNIT

SMS 76 : S1, S4, T1, T4, A11, A12, A13, A14

PLATE PACK TIGHTENING TO	1232 mm
TOTAL NO OF PLATES	254
NETWEIGHT	673 kg
WEIGHT WITH WATER	923 kg
TOTAL VOLUME	250 l
DESIGN PRESSURE	16 bar / 16 bar
TEST PRESSURE	22,9 bar / 22,9 bar
DESIGN TEMPERATURE MIN	0 °C / 0 °C
DESIGN TEMPERATURE MAX	150 °C / 150 °C
RISK CATEGORY	3
FLUID DANGER GROUP	2 / 2

EXTRAS

PLATE HEAT EXCHANGER

MS10-SM

PED

CE

Tetra Pak

PREPARED	DATE	SERIAL NUMBER	REV
798579	2016-08-16	30109-16227	0

PIPING SYMBOLS

- PROCESS MEDIA, RED
- CLEANING MEDIA, MAGENTA
- SERVICE MEDIA, CYAN
- PROCESS AIR, CYAN
- POWDER + AIR, RED
- VAPOUR, CYAN
- ELECTRICAL CONTROL, GREEN
- AIR CONTROL, BLUE
- LIQUID CONTROL, ORANGE
- SONIC SIGNAL
- PROCESS FLOW DIRECTION
- CIP FLOW DIRECTION
- FLEXIBLE HOSE
- PIPE WITH HEATING OR COOLING JACKET
- PIPE WITH HEATING OR COOLING COIL
- INSULATED LINE

NOTE: INSULATION/JACKETING SYMBOL TO APPEAR ONCE ON A LINE PER DRAWING.

- CAP ON PIPE END
- UNION
- LIMIT OF DELIVERY
- ORIFICE

DENOMINATION

A	AIR
IA	INSTRUMENT AIR
SA	SANITARY AIR
C	CONDENSATE
D	DRAIN
S	STEAM
W	WATER
CW	COOLING WATER
HW	HOT WATER
IW	ICE WATER
SW	SOFTENED WATER
TW	TOWER WATER
GW	GLYCOL WATER
G	GAS
–R	RETURN
–C	CIRCULATION
CIP PR	CLEANING PRESSURE LINE
CIP R	CLEANING RETURN LINE
HP	HIGH PRESSURE
CONC	CONCENTRATE

INSTRUMENTS

- COMMON INSTRUMENT LOCALLY MOUNTED
- COMMON INSTRUMENT PANEL MOUNTED OR SOFT-WARE FUNCTION
- DUMMY

FIRST LETTER

Measured or Initiation variable

- DENSITY
- FLOWRATE (L/H), MASSFLOW (KG/H) OR VOLUME (L)
- POSITION
- LEVEL
- PRESSURE/VACUUM
- PRESSURE DIFFERENCE
- QUALITY*
- TEMPERATURE
- WEIGHT
- FREQUENCY/SPEED

SECOND LETTER

Display of output function

- CONTROLLING
- SENSING ELEMENT
- INDICATING
- RECORDING
- SWITCHING
- TRANSMITTING
- CONVERTING

THIRD LETTER

Qualifying letter

- HIGH
- MEDIUM
- LOW

*TYPE OF QUALITY

- BRIX
- pH
- CONDUCTIVITY
- TURBIDITY

HYGIENIC VALVES

- ASEPTIC VALVE GENERAL SYMBOL
- MANUAL PLUG COCK 2-WAY
- MANUAL PLUG COCK 3-WAY
- MANUAL SANITARY CONTROL VALVE
- FLOW CONTROL VALVE
- SANITARY MODULATING VALVE
- SANITARY NON-RETURN VALVE
- SANITARY MANUAL VALVE
- SANITARY AUTOMATIC VALVE
- SANITARY MANUAL BUTTERFLY VALVE CLOSED
- SANITARY MANUAL BUTTERFLY VALVE OPEN
- SANITARY AUTOMATIC BUTTERFLY VALVE NORMALLY CLOSED, NC
- SANITARY AUTOMATIC BUTTERFLY VALVE NORMALLY OPEN, NO
- SANITARY MIXPROOF VALVE CLEANING OF SPINDLE AND CHAMBER
- SANITARY MIXPROOF VALVE
- SANITARY MIXPROOF VALVE TANK OUTLET
- ASEPTIC SAMPLING VALVE
- SANITARY SAMPLING VALVE
- AIR BLOW VALVE

NON-HYGIENIC VALVES

- NORMALLY OPEN VALVE WAY
- NORMALLY CLOSED VALVE WAY
- MANUAL SHUT-OFF VALVE
- MANUAL CHANGE-OVER VALVE
- MANUAL CONTROL VALVE
- AIR RELEASE VALVE
- VACUUM RELEASE VALVE
- PRESSURE RELEASE VALVE
- CONSTANT FLOW/PRESSURE VALVE
- NON-RETURN VALVE
- AUTOMATIC SHUT-OFF VALVE
- AUTOMATIC CHANGE- OVER VALVE
- AUTOMATIC MODULATING VALVE 2-WAY
- AUTOMATIC MODULATING VALVE 3-WAY
- SOLENOID VALVE

ACTUATOR FUNCTIONS

- HAND ACTUATOR
- MODULATING ACTUATOR
- ON/OFF ACTUATOR
- SOLENOID ACTUATOR
- ELECTRIC MOTOR
- SPRING
- FLOAT
- TOP UNIT
- FEEDBACK UNIT

PUMPS

- CENTRIFUGAL PUMP
- POSITIVE PUMP
- VACUUM PUMP
- LIQUID RING PUMP
- SCREW PUMP
- COMPRESSOR
- BLOWER
- FAN

COMPONENTS

- STEAM TRAP
- FILTER, STRAINER
- SIGHT GLASS
- AGITATOR
- SYPHON
- CLEANING DEVICE
- EJECTOR/INJECTOR
- DRAIN/FUNNEL ATMOSPHERIC PRESSURE
- EXPANSION VESSEL
- SILENCER
- PLATE HEAT EXCHANGER
- TUBE SIDE
- TUBULAR HEAT EXCHANGER
- SHELL SIDE
- STATIC MIXER

Rev	Qty	Description	Issued By	Approved By	Date of Approval
06		Added and updated symbol	Klo	TAn	2014–03–25

Tetra Pak Processing

P&ID SYMBOLS

Tetra Pak®

Format	File Name
A3	TPPS_PID_symbols.dwg
Scale	Document No
– – –	POINT -1834-1048-01

© Tetra Pak. All rights reserved; any copying, transmittal or disclosure subject to Tetra Pak's written approval.

Rev.	Description	Designer	Appr. By	Date

TETRA ALEX

PRODUCT OUT/RETURN
Free outlet required

CIP RETURN/REJECT
Free outlet required

FUTURE SPHC

SB05

CUSTOMER PRODUCT SUPPLY
REMARK!
CENTRIFUGAL PUMP
3 BAR SUPPLY PRESSURE

HC 20 SEC

M6

Valves	Signals
V810 V811	- TE830
- - -	Y824, Y825 LSL835, LSH835, TE845, PSL846, PT847 PT827, PT827.2
- - - -	PSL846, PT847 TE831 TS815, LSL835, LSH835, PS837 PS838, PSL814, PSL840, TS841, TS842

Air connections (*=Three Pos. valve)

Over flow valves with sealed Air Pressure Controller (PC)

Item	PC	Air pressure Setpoint bars	Product press. P2 bars	Product press. P1 bars
V76	PC76	5.0	-	6.8

Air pressure to open valve at too high product pressure

SPHC CONNECTED | SPHC DISCONNECTED

LIMIT OF DELIVERY
TETRA PAK TPD&B
CUSTOMER

CAUTION, HIGH TEMPERATURE OUTLET!

Tetra Therm® Aseptic VTIS				
FLOW DIAGRAM				
Sold-to No. T5844130774	Issued By HU	Appv. By CS	Date 2016-06-15	File Name 30242-1353.dwg
		Format A0	Template Flow Diagram TA VTIS_rev8.00.15.dwg	
Tetra Pak®		Scale N/A	Document No. 30242-1353	Rev.No. 0

© Tetra Pak. All rights reserved, any copyrig, transmitted or disclosure subject to Tetra Pak's written approval.

Company	**Tetra Pak Dairy & Beverage Systems AB**
Project number	**Ord_T5844130774**
Serial number	**T5844130774**
Material number	**2901101-0100**
Material description	**Tetra Therm Aseptic VTIS**
Date	**2016-06-15**
Issued by	**Henrik Urban**
Revision	**1, 2016-12-14**
	Changed LS50

Item No.	Label	No		Article No.	Denomination	Type	Doc No	Note	Rev.
0	**TA VTIS**			**2901101-0100**					
1	_	1	L	3058155-0100	Main module TA VTIS		No doc.		
1	A-info	1	T						
1	A-Info	1	T						
1	A-info	1	T						
1	APC cone	1	L	6-32422 0393 1	Valve cone	APC ISO51/DIN50 Kvs=12.0 According to drawing:32422-0393 Rev.01	No doc.		
1	APC cone	1	L	6-32422 0394 1	Valve cone	APC ISO51/DIN50 Kvs=10.0 According to drawing:32422-0394 Rev.01	No doc.		
1	APC cone	1	L	6-32422 0261 1	Valve cone	APC ISO51/DIN50 DIN Kvs=14.0 According to drawing:32422-0261 Rev.02	No doc.		
1	APC cone	1	L	6-32422 0275 1	Valve cone	APC ISO51/DIN50 Kvs=7.0 According to drawing:32422-0275 Rev.01	No doc.		
1	APC diaphragm	1	L	6-9611 92 0001	Diaphragm set	PTFE EPDM ARC chg over/stop/SPC2 38-63,5	No doc.		
1	CR345	1	L	6-31801 5046 1	Steam trap	FT14-10 R-L, DN20 G3/4" PN16	1211779-0101		
1	CR353	1	L	6-31801 5046 1	Steam trap	FT14-10 R-L, DN20 G3/4" PN16	1211779-0101		
1	DHM	1	L	2895144-0100	DHM module S-vessel		No doc.		
1	DV11	1	L	90513-8306	Air vent valve SS	With ball valve DN15 PN10, no fitting Type AB050/R002	1212676-0101		
1	F345	1	L	6-31801 9899 3	Steam filter	VBA-193-AE/ZCHS3-001C-V 1um W DN80 11bar(g) Material housing/cartridge 1.4307/1.4404	1215497-0101		
1	F353	1	L	6-31801 5609 2	Strainer	Fig 12 ISO228/1-G3/4 PN25 SS screen 0.8mm SG Iron	1248674-0101		
1	FI10	1	L	90515-8857	Flow indicator	H250/RR/M40 2" SMS 1145 PN16 2500-25000l/h	1229491-0101		
1	GS50	1	L	344254-0150	Sensor cable		No doc.		
1	GS50	1	L	90510-0270	Proximity switch	M18x1 L=70mm, SS, IP69K, M12-conn. 10-36VDC, 3-w.PNP/2-w.PNP/NPN Sensing range 0-8mm	1241250-0101		
1	GS51	1	L	344254-0150	Sensor cable		No doc.		
1	GS51	1	L	90510-0270	Proximity switch	M18x1 L=70mm, SS, IP69K, M12-conn. 10-36VDC, 3-w.PNP/2-w.PNP/NPN Sensing range 0-8mm	1241250-0101		
1	GS52	1	L	344254-0150	Sensor cable		No doc.		
1	GS52	1	L	90510-0270	Proximity switch	M18x1 L=70mm, SS, IP69K, M12-conn. 10-36VDC, 3-w.PNP/2-w.PNP/NPN Sensing range 0-8mm	1241250-0101		
1	HE01	1	L	2827571-0100	Tubular Heat Exchanger C85		1223855-0101		
1	M6	1	L	2568800-0100	Tetra Pak Homogenizer		No doc.		
1	PI01	1	L	90522-0150	Pressure gauge	SMS38 0-1MPa/0-10bar(g) v. 233.50.100 lower mount 990.19 DN 1 1/2" union nut	1212430-0101		

This document and its content are our exclusive property and must not be copied, reproduced, transmitted or communicated to any other party or used for purposes not expressly permitted by us

Item No.	Label	No		Article No.	Denomination	Type	Doc No	Note	Rev.
1	PI03	1	L	90522-0152	Pressure gauge	SMS38 0-2.5MPa/0-25bar(g) v. 233.50.100 lower mount 990.19 DN 1 1/2" union nut	1212430-0101		
1	PI11	1	L	90522-0158	Pressure gauge	SMS38 0-25bar(g) h. 233.50.100 lower back mount 990.19 DN 1 1/2" union nut	1212430-0101		
1	PT61A	1	L	90515-5430	Pressure transmitter	PMP55 SMS38.0 0-10bar(g) 4-20mA , F15 SS house Cable gland M20x1.5 IP66/68	1229086-0101		
1	PT61B	1	L	90516-0870	Pressure transmitter	PMP51 G1/2" 0-10bar(g) 4-20mA HART F15 SS house w/o display Cable gland M20x1.5	1229086-0101		
1	PT62A	1	L	90515-5430	Pressure transmitter	PMP55 SMS38.0 0-10bar(g) 4-20mA , F15 SS house Cable gland M20x1.5 IP66/68	1229086-0101		
1	PT62B	1	L	90516-0870	Pressure transmitter	PMP51 G1/2" 0-10bar(g) 4-20mA HART F15 SS house w/o display Cable gland M20x1.5	1229086-0101		
1	PT63A	1	L	90515-5430	Pressure transmitter	PMP55 SMS38.0 0-10bar(g) 4-20mA , F15 SS house Cable gland M20x1.5 IP66/68	1229086-0101		
1	PT63B	1	L	90516-0870	Pressure transmitter	PMP51 G1/2" 0-10bar(g) 4-20mA HART F15 SS house w/o display Cable gland M20x1.5	1229086-0101		
1	SMS 101	1	L	6-31317 0886 2	Seal ring	SMS101.6 101.6/114.0x5.5 AL113 3025-86 EPDM	No doc.		
1	SMS 101	1	L	6-31317 0551 7	Seal ring	SMS101.6 101.60/114.00x4.00 PTFE	No doc.		
1	SMS 25 HP	1	L	6-990322 04	O-ring	ISO3601-1-115B-17.12-2.62-N 70 Shore A EPDM E7502 FDA Approved	No doc.		
1	SMS 25	1	L	90510-4328	Seal ring	SMS25 25x32x5.5 PTFE	No doc.		
1	SMS 25	1	L	6-31317 0375 3	Seal ring	SMS25 25.0/32.0x5.5 AL113 3025-86 EPDM	No doc.		
1	SMS 38 HP	1	L	6-990368 35	O-ring	37.69x3.53 70 EPDM 291 FDA approved	No doc.		
1	SMS 38	1	L	6-31317 0377 2	Seal ring	SMS38 38.0/48.0x5.5 AL113 3025-86 EPDM	No doc.		
1	SMS 38	1	L	90510-4329	Seal ring	SMS38 38x48x5.5 PTFE	No doc.		
1	SMS 51 HP	1	L	6-990368 42	O-ring	53.57x3.53 70 EPDM 291 FDA approved	No doc.		
1	SMS 51	1	L	90512-6062	Seal ring	SMS51 51x61x5.5 PTFE	No doc.		
1	SMS 51	1	L	6-31317 0378 5	Seal ring	SMS51 51.0/61.0x5.5 AL113 3025-86 EPDM	No doc.		
1	SMS 63 HP	1	L	6-990322 73	O-ring	ISO3601-1-333B-62.87-5.33-N 70 Shore A EPDM E7502 FDA Approved	No doc.		
1	SMS 63	1	L	6-31317 0379 3	Seal ring	SMS63.5 63.5/73.5x5.5 AL113 3025-86 EPDM	No doc.		
1	SMS 63	1	L	90512-6063	Seal ring	SMS63.5 63.5x73.5x5.5 PTFE	No doc.		
1	SMS 76 HP	1	L	6-990322 74	O-ring	ISO3601-1-337B-75.57-5.33-N 70 Shore A EPDM E7502 FDA Approved	No doc.		
1	SMS 76	1	L	6-31317 0380 3	Seal ring	SMS76.1 76.1/86.0x5.5 AL113 3025-86 EPDM	No doc.		
1	SMS 76	1	L	90512-6064	Seal ring	SMS76.1 76.1x86x5.5 PTFE	No doc.		
1	SS353	1	L	90515-6394	Steam sep.	S8 DN80 AISI304 BS4504(DIN) PN40	1214605-0101		
1	TT03	1	L	90510-5633	Temperature transmitter	TPT12 4-20mA Measuring range 0-160 deg. C	3283902-0101		
1	TT03	1	L	344254-0150	Sensor cable		No doc.		
1	TT10	1	L	90510-5633	Temperature transmitter	TPT12 4-20mA Measuring range 0-160 deg. C	3283902-0101		
1	TT10	1	L	344254-0150	Sensor cable		No doc.		
1	TT26	1	L	344254-0150	Sensor cable		No doc.		
1	TT26	1	L	90510-5633	Temperature transmitter	TPT12 4-20mA Measuring range 0-160 deg. C	3283902-0101		
1	TT39	1	L	344254-0150	Sensor cable		No doc.		
1	TT39	1	L	90510-5633	Temperature transmitter	TPT12 4-20mA Measuring range 0-160 deg. C	3283902-0101		

This document and its content are our exclusive property and must not be copied, reproduced, transmitted or communicated to any other party or used for purposes not expressly permitted by us

Item No.	Label	No		Article No.	Denomination	Type	Doc No	Note	Rev.
1	TT44 REF	1	T		Plug for PT100				
1	TT44	1	L	90510-5633	Temperature transmitter	TPT12 4-20mA Measuring range 0-160 deg. C	3283902-0101		
1	TT44	1	L	344254-0150	Sensor cable		No doc.		
1	TT60	1	L	90510-5633	Temperature transmitter	TPT12 4-20mA Measuring range 0-160 deg. C	3283902-0101		
1	TT60	1	L	344254-0150	Sensor cable		No doc.		
1	TT63	1	L	344254-0150	Sensor cable		No doc.		
1	TT63	1	L	90510-5633	Temperature transmitter	TPT12 4-20mA Measuring range 0-160 deg. C	3283902-0101		
1	TT74	1	L	90510-5633	Temperature transmitter	TPT12 4-20mA Measuring range 0-160 deg. C	3283902-0101		
1	TT74	1	L	344254-0150	Sensor cable		No doc.		
1	V26	1	L	90513-3138	Regulating valve	8802YG/70E/8694 W DN20 NC SS/PTFE Kvs 10 SMS 3008 25,0	1226927-0101		
1	V26	1	L	90518-7758	Sensor cable	15m, PVC, 8-pole 1xM12 angled, A-coded	No doc.		
1	V27	1	L	6-9613 36 0067	Single seat valve	SSV-W-51-210-NO-EPDM Change Over	1221122-0101		
1	V28	1	L	6-9613 36 0067	Single seat valve	SSV-W-51-210-NO-EPDM Change Over	1221122-0101		
1	V39	1	L	90518-7758	Sensor cable	15m, PVC, 8-pole 1xM12 angled, A-coded	No doc.		
1	V39	1	L	90513-3131	Regulating valve	8802YG/90E/8694 W DN40 NC SS/PTFE Kvs 34 SMS 3008 38,0	1226927-0101		
1	V51	1	L	6-9613 32 9402	Single seat valve	SSV-W-51-300-NC-EPDM as. HP Shut off Maintainable actuator	1222444-0101		
1	V60	1	L	90512-8694	Valve connector	Type A, SAC-3P-10,0-PVC/A Cable 10m	No doc.		
1	V60	1	L	6-31801 9648 5	Regulating valve	Samson 3323/3372 120cm2 GG DIN DN40 PN16 Kvs=20 SS/SS Divert.NC/A,linear	1224800-0101		
1	V61	1	L	6-9613 36 3175	Single seat valve	SSV-W-51-210-NC-EPDM TP Change Over Maintainable actuator	1221122-0101		
0	**DHM module S-vessel**			**2895144-0100**					
1	_	252	L	MS10_PL_EPDMFF	PHE-plates	Plex M10 EPDMFF	1220922-0101		
1	_	2	L	MS10_SECEPDMFF	PHE-sections	Plex M10 EPDMFF	1220922-0101		
1	B306A	1	L	6-32422 0467 1	Steam barrier	For clamp connection 63.5 mm Acc. to drawing:32422-0467-1 rev4	1216067-0101		
1	B306B	1	L	6-32422 0467 1	Steam barrier	For clamp connection 63.5 mm Acc. to drawing:32422-0467-1 rev4	1216067-0101		
1	B318	1	L	6-32422 0470 1	Steam barrier	For clamp connection 76,1 mm Acc. to drawing:32422-0470-1 rev4	1216067-0101		
1	B319	1	L	6-32422 0470 1	Steam barrier	For clamp connection 76,1 mm Acc. to drawing:32422-0470-1 rev4	1216067-0101		
1	B320	1	L	6-32422 0470 1	Steam barrier	For clamp connection 76,1 mm Acc. to drawing:32422-0470-1 rev4	1216067-0101		
1	B321	1	L	6-32422 0470 1	Steam barrier	For clamp connection 76,1 mm Acc. to drawing:32422-0470-1 rev4	1216067-0101		
1	B322	1	L	6-32422 0470 1	Steam barrier	For clamp connection 76,1 mm Acc. to drawing:32422-0470-1 rev4	1216067-0101		
1	B323	1	L	6-32422 0569 1	Steam barrier	For clamp connection 25_38 mm Acc to drawing 32422-0569-1 rev.4	1216067-0101		
1	B324	1	L	6-32422 0569 1	Steam barrier	For clamp connection 25_38 mm Acc to drawing 32422-0569-1 rev.4	1216067-0101		

This document and its content are our exclusive property and must not be copied, reproduced, transmitted or communicated to any other party or used for purposes not expressly permitted by us

Item No.	Label	No		Article No.	Denomination	Type	Doc No	Note	Rev.
1	B325	1	L	6-32422 0569 1	Steam barrier	For clamp connection 25_38 mm Acc to drawing 32422-0569-1 rev.4	1216067-0101		
1	B326	1	L	6-32422 0569 1	Steam barrier	For clamp connection 25_38 mm Acc to drawing 32422-0569-1 rev.4	1216067-0101		
1	CR313	1	L	6-31801 9809 1	Steam trap	MST21G G1/2" PN25	1212764-0101		
1	CV07	1	L	6-9612 22 0009	Non-return valve	LKC-2-W-ISO-51.0-316L EPDM	1241273-0101		
1	CV304	1	L	6-9612 22 0009	Non-return valve	LKC-2-W-ISO-51.0-316L EPDM	1241273-0101		
1	CV308	1	L	6-9612 22 0009	Non-return valve	LKC-2-W-ISO-51.0-316L EPDM	1241273-0101		
1	CV309	1	L	6-31801 9722 4	Non-return valve	RK86A-DN80-Flange-DIN2545 1.4408-Metal	1216355-0101		
1		2	L	6-34144 2125 1	Ladder support	45x45x2 2333-02	No doc.		
1	Drawings	1	T		Drawings				
1	FI308	1	L	90515-8858	Flow indicator	H250/RR/M40 3" SMS 1145 PN16 4000-40000l/h	1229491-0101		
1	Frame HCM	1	L	3078253-0100	Frame TA VTIS HC module		No doc.		
1	Frame S-DHM	1	L	3078252-0100	Frame TA VTIS DHM module		No doc.		
1	GS16	1	L	344254-0100	Sensor cable, EVT005	Cable length 10 m	No doc.		
1	GS16	1	L	90510-0270	Proximity switch	M18x1 L=70mm, SS, IP69K, M12-conn. 10-36VDC, 3-w.PNP/2-w.PNP/NPN Sensing range 0-8mm	1241250-0101		
1	GS20	1	L	344254-0100	Sensor cable, EVT005	Cable length 10 m	No doc.		
1	GS20	1	L	90510-0270	Proximity switch	M18x1 L=70mm, SS, IP69K, M12-conn. 10-36VDC, 3-w.PNP/2-w.PNP/NPN Sensing range 0-8mm	1241250-0101		
1	GS21	1	L	344254-0100	Sensor cable, EVT005	Cable length 10 m	No doc.		
1	GS21	1	L	90510-0270	Proximity switch	M18x1 L=70mm, SS, IP69K, M12-conn. 10-36VDC, 3-w.PNP/2-w.PNP/NPN Sensing range 0-8mm	1241250-0101		
1	H328	1	L	6-9611 99 3673	Light fitting	Type 53 for LKS/DIN11851 24V AC/DC 50W	No doc.		
1	H328	1	L	6-32142 2033 1	Bracket	D=14 M4x16	No doc.		
1	HE05	1	L	6-30360 0105 1	Tetra Plex	M10	No doc.		
1	LAD_DHM	1	L	6-34144 8241 1	Ladder	Acc. to dwg:34144-8241-1			
1	LS303	1	L	90521-5566	Level switch	FTL33 Flush mount 10-30V DC, 3-w PNP Compact 316L, Ra<0.76um Plug M12, IP 65/67 NEMA 4X	3283723-0101		
1	LS303	1	L	90501-7450	Welding neck	For FTL50H/51H EE2 / 20H UPJ AISI 316L Flush-mounting	No doc.		
1	LS304	1	L	90521-5566	Level switch	FTL33 Flush mount 10-30V DC, 3-w PNP Compact 316L, Ra<0.76um Plug M12, IP 65/67 NEMA 4X	3283723-0101		
1	LS304	1	L	90501-7450	Welding neck	For FTL50H/51H EE2 / 20H UPJ AISI 316L Flush-mounting	No doc.		
1	LT306	1	L	90503-5960	Differential pressure transmitter	FMD78 Tri-Cl.63.5 capillary 3.5m 4-20mA 0.5bar, With display aluminium house Metall.membrane fill fluid:vegetable oil	1219131-0101		
1	M305	1	L	6-9613 39 4972	Centrifugal pump	LKH-25/205-DMS-SMS-15.0kW-EPDM is C/SiC 50Hz 230D/400-415Y ABB IE3	1214246-0101		
1	M308	1	L	6-9613 39 4968	Centrifugal pump	LKH-50/190-DMS-SMS-15.0kW-EPDM C/SiC 50Hz 230D/400-415Y ABB IE3	1214246-0101		
1	M311	1	L	90513-4600	Vacuum pump	LEMB 161 8Z AA1 4B 0 1C 5/6kW 50/60Hz 400/690-460V	1229146-0101		
1	M4	1	L	6-9613 39 4879	Centrifugal pump	LKH-25/205-DMS-SMS-11.0kW-EPDM is C/SiC 50Hz 230D/400-415Y ABB IE3	1214246-0101		
1	MFC04	1	L	90503-8200	Constant flow valve	Flow restrictor G 1/2 REG-1200-D 0.5l/mi	1221586-0101		
1	MFC324	1	L	90503-8203	Constant flow valve	Flow restrictor G 1/2 REG-1203-D 3.0l/mi	1221586-0101		

This document and its content are our exclusive property and must not be copied, reproduced, transmitted or communicated to any other party or used for purposes not expressly permitted by us

Item No.	Label	No		Article No.	Denomination	Type	Doc No	Note	Rev.
1	OP314	1	T		Orifice plate 20 mm			Drilled 20mm	
1	OP320	1	T		Orifice plate 11 mm (Supply to CIP nozzle*3)			Drilled xxmm (To be calculated)	
1	OP321	1	T		Orifice plate 8,5 mm (Supply to CIP nozzle in chimney)			Drilled xxmm (To be calculated)	
1	P&F S-DHM	1	L	2619253-0100	Pipes & Fittings for DHM		No doc.		
1	PC301	1	L	90519-8606	Pressure regulator	FRL-G3/8-10 ISO228/1 1.5-10bar(g) incl. pressure switch, pressure indicato filter 5um	3283771-0101		
1	PC301	1	L	344254-0100	Sensor cable, EVT005	Cable length 10 m	No doc.		
1	PC322	1	L	90503-3362	Reducing valve	TLV DR20-2-DN20-ISO228/1-G3/4 Cast SS 0.14-2.0bar(g) Kvs=2,6	1221734-0101		
1	PC323	1	L	90503-3362	Reducing valve	TLV DR20-2-DN20-ISO228/1-G3/4 Cast SS 0.14-2.0bar(g) Kvs=2,6	1221734-0101		
1	PI07	1	L	90522-0150	Pressure gauge	SMS38 0-1MPa/0-10bar(g) v. 233.50.100 lower mount 990.19 DN 1 1/2" union nut	1212430-0101		
1	PI302	1	L	90522-0150	Pressure gauge	SMS38 0-1MPa/0-10bar(g) v. 233.50.100 lower mount 990.19 DN 1 1/2" union nut	1212430-0101		
1	PI305	1	L	90522-0156	Pressure gauge	SMS38 0-1MPa/0-10bar(g) h. 233.50.100 lower back mount 990.19 DN 1 1/2" union nut	1212430-0101		
1	PI312	1	L	90522-0156	Pressure gauge	SMS38 0-1MPa/0-10bar(g) h. 233.50.100 lower back mount 990.19 DN 1 1/2" union nut	1212430-0101		
1	PI315	1	L	90522-0140	Pressure gauge	G3/8" 0-1MPa/0-10bar(g) v. 233.50.100 lower mount	1212430-0101		
1	PI316	1	L	90522-0154	Pressure gauge	SMS38 -1-3bar(g) v. 233.50.100 lower mount 990.19 DN 1 1/2" union nut	1212430-0101		
1	PI380	1	L	90522-0140	Pressure gauge	G3/8" 0-1MPa/0-10bar(g) v. 233.50.100 lower mount	1212430-0101		
1	PI390	1	L	90522-0140	Pressure gauge	G3/8" 0-1MPa/0-10bar(g) v. 233.50.100 lower mount	1212430-0101		
1	PLF_DHM	1	L	6-32421 1612 1	Platform high	For S30/S16. According to drawing 32421-1612 Rev00	No doc.		
1	PT310	1	L	90515-5430	Pressure transmitter	PMP55 SMS38.0 0-10bar(g) 4-20mA , F15 SS house Cable gland M20x1.5 IP66/68	1229086-0101		
1	PT313	1	L	344254-0100	Sensor cable, EVT005	Cable length 10 m	No doc.		
1	PT313	1	L	90503-3245	Pressure transmitter	PTP31 G1/2" A 0-10bar(g) 12-30V DC 4-wire PNP 4-20mA SS house IP66 Connector M12x1.5	1218198-0101		
1	PX330	1	L	90510-8981	I/P converter	ITV1050 0-0.9MPa 24V DC 4-20m A/PNP ISO228/1-G3/8 M12 Male 4-pin	1224084-0101		
1	PX330	1	L	344254-0100	Sensor cable, EVT005	Cable length 10 m	No doc.		
1	PX354	1	L	344254-0100	Sensor cable, EVT005	Cable length 10 m	No doc.		
1	PX354	1	L	90510-8981	I/P converter	ITV1050 0-0.9MPa 24V DC 4-20m A/PNP ISO228/1-G3/8 M12 Male 4-pin	1224084-0101		
1	PX362	1	L	344254-0100	Sensor cable, EVT005	Cable length 10 m	No doc.		
1	PX362	1	L	90510-8981	I/P converter	ITV1050 0-0.9MPa 24V DC 4-20m A/PNP ISO228/1-G3/8 M12 Male 4-pin	1224084-0101		
1	PX78	1	L	90510-8981	I/P converter	ITV1050 0-0.9MPa 24V DC 4-20m A/PNP ISO228/1-G3/8 M12 Male 4-pin	1224084-0101		
1	PX78	1	L	344254-0100	Sensor cable, EVT005	Cable length 10 m	No doc.		
1	S16-30_SC tools	5	L	6-223101 61	Washer	ISO7089 10 200 HV A4	No doc.		

This document and its content are our exclusive property and must not be copied, reproduced, transmitted or communicated to any other party or used for purposes not expressly permitted by us

Item No.	Label	No		Article No.	Denomination	Type	Doc No	Note	Rev.
1	S16-30_SC tools	1	L	90519-0113	Lift trolley	Goldy 100/70 TP Chromium plated For S-vessels spray condenser. CE-mark 1880x555x773mm (HxBxL)	3281785-0101		
1	S16-30_SC tools	4	L	6-221041 01	Hexagon head screw	ISO 4017/DIN 933 M10x30 A4-70	No doc.		
1	S16-30_SC tools	1	L	6-34144 7969 1	Shelf	For rack & pinion jack	No doc.		
1	S16-30_SC tools	1	L	6-34144 7968 1	Bracket	For rack & pinion jack	No doc.		
1	S16-30_SC tools	2	L	90287-0359	Screw		No Doc.		
1	S16-30_SC tools	1	L	6-223101 37	Washer	EN ISO 7089 16 200HV A4	No doc.		
1	S16-30_SC tools	1	L	6-34144 7970 1	Attachment plate	For rack & pinion jack	No doc.		
1	S16-30_SC tools	3	L	6-32423 1432 1	Screw kit		No doc.		
1	S16-30_SC tools	1	L	6-34144 7974 1	Upper support	For rack & pinion jack	No doc.		
1	S16-30_SC tools	1	L	6-221041 09	Hexagon head bolt	ISO 4014/DIN 931 M10x70 A4-70	No doc.		
1	S16-30_SC tools	4	L	6-221041 20	Hexagon head screw	ISO 4017/DIN 933 M10x25 A4-70	No doc.		
1	S16-30_SC tools	1	L	6-34144 7971 1	Lower support	For rack & pinion jack	No doc.		
1	S16-30_SC tools	5	L	6-221803 29	Hexagon nut	DIN934 M10 A4-70	No doc.		
1	S16-30_SC tools	1	L	6-34144 7693 1	Support S-Vessel	For S30 / S16 / S9 Acc. to draw:34144-7693 Rev00	No doc.		
1	S16-30_SC tools	4	L	6-221803 29	Hexagon nut	DIN934 M10 A4-70	No doc.		
1	S16-30_SC tools	1	L	6-2 210463 07	Hexagon head bolt	ISO 4014/DIN 931 M16x60 A4-70	No doc.		
1	S16-30_SC tools	1	L	90513-5592	Rack and Pinion jack	For S-vessel spray condenser	No doc.		
1	S-16	1	L	6-32423 1573 1	Flash vessel	S-16 PED EN 1.4301 (AISI304) SMS/Cl. Acc. to draw:32423-1573 rev04	1226601-0101		
1	S311	1	T		Silencer for vacuum pump				
1	SI353	1	L	6-32422 0221 1	Steam injector	Circular gap, Capacity 4.5 - 20m3/h Product In/Out W51/SMS76 1.4436	1241195-0101		
1	Sign	1	L	359605-0005	Mand. Action Sign ISO, Hearing Protectio		No doc.		
1	Sign	1	L	359705-0008	Warning Sign ISO, Burn Hazard		3284690-0101		
1	Sign	1	L	90459-0631	Sign, TP 90459-0631		3284690-0101		
1	Stripe	4.2	L	90511-8563	Stripe	Blue, height 70mm Supplied on roll length 25m	No doc.		
1	Stripe	6.5	L	90513-3098	Stripe	Blue, height 110mm Supplied on roll length 25m	No doc.		
1	SX04	1	T		Frequency Converter				
1	SX305	1	T		Frequency converter				
1	SX308	1	T		Frequency converter				
1	TT06	1	L	344254-0100	Sensor cable, EVT005	Cable length 10 m	No doc.		
1	TT06	1	L	90510-5633	Temperature transmitter	TPT12 4-20mA Measuring range 0-160 deg. C	3283902-0101		
1	TT305	1	L	344254-0100	Sensor cable, EVT005	Cable length 10 m	No doc.		
1	TT305	1	L	90510-5633	Temperature transmitter	TPT12 4-20mA Measuring range 0-160 deg. C	3283902-0101		
1	TT308	1	L	90510-5633	Temperature transmitter	TPT12 4-20mA Measuring range 0-160 deg. C	3283902-0101		
1	TT308	1	L	344254-0100	Sensor cable, EVT005	Cable length 10 m	No doc.		
1	TT319	1	L	344254-0100	Sensor cable, EVT005	Cable length 10 m	No doc.		
1	TT319	1	L	90510-5633	Temperature transmitter	TPT12 4-20mA Measuring range 0-160 deg. C	3283902-0101		
1	TT331	1	L	344254-0100	Sensor cable, EVT005	Cable length 10 m	No doc.		
1	TT331	1	L	90510-5633	Temperature transmitter	TPT12 4-20mA Measuring range 0-160 deg. C	3283902-0101		
1	TT339	1	L	90510-5633	Temperature transmitter	TPT12 4-20mA Measuring range 0-160 deg. C	3283902-0101		
1	TT339	1	L	344254-0100	Sensor cable, EVT005	Cable length 10 m	No doc.		
1	TT340	1	L	344254-0100	Sensor cable, EVT005	Cable length 10 m	No doc.		
1	TT340	1	L	90510-5633	Temperature transmitter	TPT12 4-20mA Measuring range 0-160 deg. C	3283902-0101		

This document and its content are our exclusive property and must not be copied, reproduced, transmitted or communicated to any other party or used for purposes not expressly permitted by us

Item No.	Label	No		Article No.	Denomination	Type	Doc No	Note	Rev.
1	TT341	1	L	90510-5633	Temperature transmitter	TPT12 4-20mA Measuring range 0-160 deg. C	3283902-0101		
1	TT341	1	L	344254-0100	Sensor cable, EVT005	Cable length 10 m	No doc.		
1	TT342 REF	1	T		Plug for PT100				
1	TT342	1	L	90510-5633	Temperature transmitter	TPT12 4-20mA Measuring range 0-160 deg. C	3283902-0101		
1	TT342	1	L	344254-0100	Sensor cable, EVT005	Cable length 10 m	No doc.		
1	TT344 REF	1	T		Plug for PT100				
1	TT344	1	L	344254-0100	Sensor cable, EVT005	Cable length 10 m	No doc.		
1	TT344	1	L	90513-0949	Temperature transmitter	TPT12 4-w 4-20mA, incl.500mm cable Measuring range 0-160 deg. C	3283902-0101		
1	TT345	1	L	344254-0100	Sensor cable, EVT005	Cable length 10 m	No doc.		
1	TT345	1	L	90510-5633	Temperature transmitter	TPT12 4-20mA Measuring range 0-160 deg. C	3283902-0101		
1	TT346	1	L	344254-0100	Sensor cable, EVT005	Cable length 10 m	No doc.		
1	TT346	1	L	90510-5633	Temperature transmitter	TPT12 4-20mA Measuring range 0-160 deg. C	3283902-0101		
1	TT347	1	L	344254-0100	Sensor cable, EVT005	Cable length 10 m	No doc.		
1	TT347	1	L	90510-5633	Temperature transmitter	TPT12 4-20mA Measuring range 0-160 deg. C	3283902-0101		
1	TT362	1	L	90510-5633	Temperature transmitter	TPT12 4-20mA Measuring range 0-160 deg. C	3283902-0101		
1	TT362	1	L	344254-0100	Sensor cable, EVT005	Cable length 10 m	No doc.		
1	TT380	1	L	90510-5633	Temperature transmitter	TPT12 4-20mA Measuring range 0-160 deg. C	3283902-0101		
1	TT380	1	L	344254-0100	Sensor cable, EVT005	Cable length 10 m	No doc.		
1	TT381	1	L	90510-5633	Temperature transmitter	TPT12 4-20mA Measuring range 0-160 deg. C	3283902-0101		
1	TT381	1	L	344254-0100	Sensor cable, EVT005	Cable length 10 m	No doc.		
1	TT390	1	L	90510-5633	Temperature transmitter	TPT12 4-20mA Measuring range 0-160 deg. C	3283902-0101		
1	TT390	1	L	344254-0100	Sensor cable, EVT005	Cable length 10 m	No doc.		
1	TT391	1	L	344254-0100	Sensor cable, EVT005	Cable length 10 m	No doc.		
1	TT391	1	L	90510-5633	Temperature transmitter	TPT12 4-20mA Measuring range 0-160 deg. C	3283902-0101		
1	TT71 REF	1	T		Plug for PT100				
1	TT71	1	L	90510-5633	Temperature transmitter	TPT12 4-20mA Measuring range 0-160 deg. C	3283902-0101		
1	TT71	1	L	344254-0100	Sensor cable, EVT005	Cable length 10 m	No doc.		
1	V305	1	L	90522-3364	Needle valve	AT1890A DN8 Kvs=0.42 1.4404 ISO228/1-G1/4	1241004-0101		
1	V308	1	L	90522-3364	Needle valve	AT1890A DN8 Kvs=0.42 1.4404 ISO228/1-G1/4	1241004-0101		
1	V311	1	L	6-9613 36 0554	Single seat valve	SSV-W-51-210-NC-EPDM as. Change Over	1222462-0101		
1	V312	1	L	6-9613 36 0518	Single seat valve	SSV-W-51-200-NO-EPDM as. Shut off	1222444-0101		
1	V313	1	L	6-9613 32 9997	Single seat valve	SSV-W-63.5-210-NO-EPDM as. TP Change Over Maintainable actuator	1222462-0101		
1	V314	1	L	6-9613 33 0485	Single seat valve	SSV-W-51-220-NO-EPDM as. TP Change Over Maintainable actuator	1222462-0101		
1	V315	1	L	6-9613 36 0590	Single seat valve	SSV-W-51-220-NO-EPDM as. Change Over	1222462-0101		
1	V316	1	L	90503-3126	Seat valve	2000/E63 W DN50 316L/PTFE NO	1218030-0101		
1	V319	1	L	90522-3364	Needle valve	AT1890A DN8 Kvs=0.42 1.4404 ISO228/1-G1/4	1241004-0101		
1	V320	1	L	6-9613 36 0530	Single seat valve	SSV-W-51-300-NC-EPDM as. Shut off	1222444-0101		
1	V321	1	L	6-9613 36 0530	Single seat valve	SSV-W-51-300-NC-EPDM as. Shut off	1222444-0101		
1	V322	1	L	90503-1596	Seat valve	2000/E63 W DN25 316L/PTFE 11bar NC Kv 19.0	1218030-0101		
1	V323	1	L	90503-1596	Seat valve	2000/E63 W DN25 316L/PTFE 11bar NC Kv 19.0	1218030-0101		
1	V328	1	L	90512-7413	Seat valve	2000/32 G3/8 NC Kvs=2.4	3282610-0101		
1	V329	1	L	90512-7413	Seat valve	2000/32 G3/8 NC Kvs=2.4	3282610-0101		

This document and its content are our exclusive property and must not be copied, reproduced, transmitted or communicated to any other party or used for purposes not expressly permitted by us

Item No.	Label	No		Article No.	Denomination	Type	Doc No	Note	Rev.
1	V330	1	L	6-32422 0302 5	Expansion valve	AISI 316 APC W ISO 51 Kvs=12	1215611-0101		
1	V330	1	L	6-32422 0556 1	Protecting Cover	For APC valve EN1.4404 ISO2037 SMS25-SMS63,5 and DIN DN25-DN65	No doc.		
1	V331	1	L	90518-7758	Sensor cable	15m, PVC, 8-pole 1xM12 angled, A-coded	No doc.		
1	V331	1	L	90521-1727	Regulating valve	8802GD/8694 W SMS 25x1.2 NO Top Control 8694 Positioner Body 316L Seats 316L	1226927-0101		
1	V334	1	L	6-31801 9975 1	Seat valve	2000/63 W25*1.2 NO 16bar(g) Kvs=19	1218030-0101		
1	V339	1	L	6-31801 9970 1	Seat valve	2000/C40 G3/8 SS PTFE NC 15bar(g) Kvs=3.7	1218030-0101		
1	V340	1	L	90522-3364	Needle valve	AT1890A DN8 Kvs=0.42 1.4404 ISO228/1-G1/4	1241004-0101		
1	V341	1	L	90522-3364	Needle valve	AT1890A DN8 Kvs=0.42 1.4404 ISO228/1-G1/4	1241004-0101		
1	V344	1	L	90511-5972	Regulating valve	3241-7/3277/3730-1 DN65 NC Kv60 SS/SS 350cm2 1.4-2.3bar	1224794-0101		
1	V344	1	L	90512-8694	Valve connector	Type A, SAC-3P-10,0-PVC/A Cable 10m	No doc.		
1	V346	1	L	90522-3364	Needle valve	AT1890A DN8 Kvs=0.42 1.4404 ISO228/1-G1/4	1241004-0101		
1	V347	1	L	90503-7704	Safety valve	Leser 4414.4664 DN40/65 3.5bar High performance, DN40, body 1.4408 closed lifting device, PED approval	1220118-0101		
1	V351	1	L	90522-3364	Needle valve	AT1890A DN8 Kvs=0.42 1.4404 ISO228/1-G1/4	1241004-0101		
1	V352	1	L	90522-3364	Needle valve	AT1890A DN8 Kvs=0.42 1.4404 ISO228/1-G1/4	1241004-0101		
1	V354	1	L	6-32422 0302 2	Expansion valve	AISI 316 APC W ISO 51 Kvs=7	1215611-0101		
1	V354	1	L	6-32422 0556 1	Protecting Cover	For APC valve EN1.4404 ISO2037 SMS25-SMS63,5 and DIN DN25-DN65	No doc.		
1	V362	1	L	6-9612 65 0299	Constant pressure valve	CPMI-D60-W-76-Kv60 316L PTFE/EPDM	1241266-0101		
1	V380	1	L	6-9612 62 8357	Butterfly valve	LKB-W-76.1-316L-EPDM-P85 NC	1215850-0101		
1	V381	1	L	90512-8694	Valve connector	Type A, SAC-3P-10,0-PVC/A Cable 10m	No doc.		
1	V381	1	L	90511-6544	Regulating valve	3244/3277/3730-1 DN40 Kvs25 350cm2 0.4-1.2bar PN16 Divert NC/A	1224795-0101		
1	V382	1	L	6-9613 36 0001	Single seat valve	SSV-W-38-200-NC-EPDM Shut off	1221121-0101		
1	V383	1	L	6-9613 36 0001	Single seat valve	SSV-W-38-200-NC-EPDM Shut off	1221121-0101		
1	V385	1	L	6-9612 62 8354	Butterfly valve	LKB-W-38-316L-EPDM-P85-NC	1215850-0101		
1	V390	1	L	6-9612 62 8358	Butterfly valve	LKB-W-101,6-316L-EPDM-P133 NC	1215850-0101		
1	V391	1	L	90512-8694	Valve connector	Type A, SAC-3P-10,0-PVC/A Cable 10m	No doc.		
1	V391	1	L	90512-2878	Regulating valve	3244/3277/3730-1 DN100 Kvs100 700cm2 0.8-2.4bar NC/A	1224795-0101		
1	V392	1	L	6-9613 36 0005	Single seat valve	SSV-W-101.6-200-NC-EPDM Shut off	1221121-0101		
1	V393	1	L	6-9613 36 0005	Single seat valve	SSV-W-101.6-200-NC-EPDM Shut off	1221121-0101		
1	V395	1	L	6-9612 62 8358	Butterfly valve	LKB-W-101,6-316L-EPDM-P133 NC	1215850-0101		
1	V41	1	L	90518-7758	Sensor cable	15m, PVC, 8-pole 1xM12 angled, A-coded	No doc.		
1	V41	1	L	90513-3132	Regulating valve	8802YG/90E/8694 W DN50 NC SS/PTFE Kvs 49 SMS 3008 51,0	1226927-0101		
1	V63	1	L	90513-3139	Regulating valve	8802YG/70E/8694 W DN32 NC SS/PTFE Kvs 23 SMS 3008 38,0	1226927-0101		
1	V63	1	L	90518-7758	Sensor cable	15m, PVC, 8-pole 1xM12 angled, A-coded	No doc.		
1	V78	1	L	6-32422 0556 1	Protecting Cover	For APC valve EN1.4404 ISO2037 SMS25-SMS63,5 and DIN DN25-DN65	No doc.		
1	V78	1	L	6-32422 0320 1	Expansion valve	AISI 316 APC W ISO 63.5 Kvs=22 Acc. to drawing:32422-0320 Rev.07	1215611-0101		

This document and its content are our exclusive property and must not be copied, reproduced, transmitted or communicated to any other party or used for purposes not expressly permitted by us

Item No.	Label	No		Article No.	Denomination	Type	Doc No	Note	Rev.
1	VB383	1	L	6-31801 5960 1	Vacuum breaker	VB21 G1/2" PN25	1248349-0101		
1	VB393	1	L	6-31801 5960 1	Vacuum breaker	VB21 G1/2" PN25	1248349-0101		
0	**Main Module TA VTIS**			**3058155-0100**					
1	BTD01	1	L	6-31542 1495 1	Balance tank	BTD-200 SMS Acc.to dwg:31542-1495	1213378-0101		
1	BTD02	1	L	6-31542 1329 1	CIP Header Batch	CIP HB tank 125L SMS Acc to dwg:31542-1329 Rev04	3281944-0101		
1	CP01	1	L	2565639-0100	CCP	TA VTIS 10/100	1228796-0101		
1	CR41	1	L	6-31801 9809 1	Steam trap	MST21G G1/2" PN25	1212764-0101		
1	CR44	1	L	90511-6240	Steam trap	DN25 FT43-10TV PN16 Flanged	1225994-0101		
1	CS05	1	L	6-9611 34 0602	Ferrule blind	Cl. 63.5/2.5" 316L	No doc.		
1	CS05	1	L	6-9612 19 0132	Strainer	LKVF-W-51-3.0mm-EPDM	1241301-0101		
1	CV06	1	L	6-9612 22 0009	Non-return valve	LKC-2-W-ISO-51.0-316L EPDM	1241273-0101		
1	CV11	1	L	6-9612 22 0009	Non-return valve	LKC-2-W-ISO-51.0-316L EPDM	1241273-0101		
1	CV12	1	L	6-9612 22 0009	Non-return valve	LKC-2-W-ISO-51.0-316L EPDM	1241273-0101		
1	CV13	1	L	90517-2813	Non-return valve	2" Sandwich type EPDM	1224311-0101		
1	CV66	1	L	6-9612 22 0007	Non-return valve	LKC-2-W-ISO-25.0-316L EPDM	1241273-0101		
1	CV67	1	L	90503-8930	Non-return valve	Metal Work 0521/0602-1/4"	No doc.		
1	CV68	1	L	90503-8930	Non-return valve	Metal Work 0521/0602-1/4"	No doc.		
1	DV10.2	1	L	90513-8306	Air vent valve SS	With ball valve DN15 PN10, no fitting Type AB050/R002	1212676-0101		
1	DV10	1	L	6-34144 8035 1	Micro bubble separator	NONAIR W DN65 adjusted 15 deg. AISI316 According to drawing: 34144-8035	No doc.		
1	F44	1	L	6-31801 5044 1	Strainer	Fig 37 SG DN25 PN40 GGG-40 Mesh=0.8mm	1241073-0101		
1	FB83	1	L	6-9613 41 8104	Top unit	IndiTop 8-30V AC/DC PNP With 0.5m cable, M12-5 contact	1221736-0101		
1	FB83	1	L	90511-1954	Sensor cable	10m angled M12-connection Without LED	No Doc.		
1	FB84	1	L	90521-1069	Adapter kit	For 8697 to 50/63/80C actuator	No doc.		
1	FB84	1	L	90521-6272	Top control	8697 2 sw 1 M16	3280255-0101		
1	FT04	1	L	90516-0519	Magnetic Flow meter	Promag 50H SMS W38.0 0-42000l/h PFA Display 20-55V AC/16-62V DC w.10m cable Pulse signal / 4-20mA HART 0.5% cal.	1218415-0101		
1	GS40	1	L	90510-0270	Proximity switch	M18x1 L=70mm, SS, IP69K, M12-conn. 10-36VDC, 3-w.PNP/2-w.PNP/NPN Sensing range 0-8mm	1241250-0101		
1	GS40	1	L	344254-0100	Sensor cable, EVT005	Cable length 10 m	No doc.		
1	HE02	1	L	6-32871 0175 6	Brazed plate heat exchanger	CB110-46L B23 O5	1210229-0101		
1	HE02	1	L	6-32360 0090 2	Insulation	CB76/CB77 31-60 plates	No doc.		
1	LE08	1	L	6-32010 2248 1	Nut	Acc.to drawing: 32010-2248	No doc.		
1	LE08	1	L	90522-2085	Level Sensor	UE-VK15 L1=125 L2=925 "Resolution 15mm, pipe 12mm" "PTFE cable 7m, Float type SV"	1241312-0101		
1	LE08	1	L	6-32249 0310 5	Seal kit	For bend dial thermometer 12mm	No doc.		
1	LE08	1	L	90511-7667	Connection box	55x55x37 2 way M20 IP66, gray, polyester	No doc.		
1	LS50	1	L	90524-2703	Level Sensor	FTL33 ISO G1/2 10-30VDC 3-wire PNP			1
1	LS50	1	L	344254-0100	Sensor cable, EVT005	Cable length 10 m	No doc.		
1	LS51	1	L	90522-2130	Level switch	FTL33 NPT1/2 10-30V DC, 3-w PNP Compact 316L, Ra<0.76um Plug M12, IP 65/67 NEMA 4X	3283723-0101		
1	LS51	1	L	344254-0100	Sensor cable, EVT005	Cable length 10 m	No doc.		
1	LSL66	1	L	90522-2130	Level switch	FTL33 NPT1/2 10-30V DC, 3-w PNP Compact 316L, Ra<0.76um Plug M12, IP 65/67 NEMA 4X	3283723-0101		

This document and its content are our exclusive property and must not be copied, reproduced, transmitted or communicated to any other party or used for purposes not expressly permitted by us

Item No.	Label	No		Article No.	Denomination	Type	Doc No	Note	Rev.
1	LSL66	1	L	344254-0100	Sensor cable, EVT005	Cable length 10 m	No doc.		
1	LT10	1	L	90511-2809	Level switch	ALVTC Tri-Cl. 2.5" L=850mm 2-w. 326L/316Ti ALVTC2.5-TP43A-VK10-L850-SV52V-SR69	1224261-0101		
1	M10	1	L	6-9613 39 4961	Centrifugal pump	LKH-20/165-DMS-SMS-7.5kW-EPDM is C/SiC 50Hz 230D/400-415Y ABB IE3	1214246-0101		
1	M2	1	L	6-9613 39 4851	Centrifugal pump	LKH-40/235-SSS-SMS-15.0kW-EPDM is C/SiC 50Hz 230D/400-415Y ABB IE3	1214246-0101		
1	Mach sign CE	1	L	359705-0018	Warning Sign ISO, Hot Cor.Subst.U H P		3284690-0101		
1	Mach sign CE	1	L	3078248-0100	Machine Sign		No doc.		
1	MFC10	1	L	90503-8200	Constant flow valve	Flow restrictor G 1/2 REG-1200-D 0.5l/mi	1221586-0101		
1	OP05	1	T		Orifice plate incl in P&F. 10 mm			Drilled 10mm	
1	OP66	1	T		Orifice plate incl in P&F. 5 mm			Drilled 5mm	
1	PC01	1	L	90519-8606	Pressure regulator	FRL-G3/8-10 ISO228/1 1.5-10bar(g) incl. pressure switch, pressure indicato filter 5um	3283771-0101		
1	PC01	1	L	344254-0100	Sensor cable, EVT005	Cable length 10 m	No doc.		
1	PC67	1	L	6-990430 45	Air regulator	REG.P.1/4 08 incl.M40 1/8 0-10+SF300 ISO2228/1-G1/4 0-8bar(g)	1241164-0101		
1	PC68	1	L	6-990430 45	Air regulator	REG.P.1/4 08 incl.M40 1/8 0-10+SF300 ISO2228/1-G1/4 0-8bar(g)	1241164-0101		
1	PC76	1	L	90503-3190	Air regulator	REG P ISO228/1-G1/4 0-8bar(G) lockable	1241164-0101		
1	PI08	1	L	90522-0140	Pressure gauge	G3/8" 0-1MPa/0-10bar(g) v. 233.50.100 lower mount	1212430-0101		
1	PI10	1	L	90522-0140	Pressure gauge	G3/8" 0-1MPa/0-10bar(g) v. 233.50.100 lower mount	1212430-0101		
1	PT44	1	L	90503-3245	Pressure transmitter	PTP31 G1/2" A 0-10bar(g) 12-30V DC 4-wire PNP 4-20mA SS house IP66 Connector M12x1.5	1218198-0101		
1	PT44	1	L	344254-0100	Sensor cable, EVT005	Cable length 10 m	No doc.		
1	PT66	1	L	90503-3245	Pressure transmitter	PTP31 G1/2" A 0-10bar(g) 12-30V DC 4-wire PNP 4-20mA SS house IP66 Connector M12x1.5	1218198-0101		
1	PT66	1	L	344254-0100	Sensor cable, EVT005	Cable length 10 m	No doc.		
1	PX74	1	L	90510-8981	I/P converter	ITV1050 0-0.9MPa 24V DC 4-20m A/PNP ISO228/1-G3/8 M12 Male 4-pin	1224084-0101		
1	PX74	1	L	344254-0100	Sensor cable, EVT005	Cable length 10 m	No doc.		
1	QT76	1	L	90520-0531	Conductivity sensor	CLD18 Tri-Cl.2", SS house	3283946-0101		
1	Sign	1	L	359605-0005	Mand. Action Sign ISO, Hearing Protectio		No doc.		
1	Sign	1	L	359705-0004	Sign	Warning ISO Dangerous Chemicals	No doc.		
1	Sign	1	L	90194-0144	Mandatory sign		No doc.		
1	Sign	2	L	359705-0008	Warning Sign ISO, Burn Hazard		3284690-0101		
1	Sign	1	L	359605-0005	Mand. Action Sign ISO, Hearing Protectio		No doc.		
1	Sign	1	L	90511-0145	Logotype	Tetra Pak 42x316.26mm, white For stripe 70mm	No doc.		
1	Sign	2	L	90194-0141	Caution Sign ISO, Dangerous Chemicals		3284690-0101		
1	Stripe	9	L	90511-8563	Stripe	Blue, height 70mm Supplied on roll length 25m	No doc.		
1	SX02	1	T		Frequency converter				
1	SX10	1	T		Frequency converter				
1	TT01	1	L	344254-0100	Sensor cable, EVT005	Cable length 10 m	No doc.		
1	TT01	1	L	90510-5633	Temperature transmitter	TPT12 4-20mA Measuring range 0-160 deg. C	3283902-0101		
1	TT08	1	L	344254-0100	Sensor cable, EVT005	Cable length 10 m	No doc.		

This document and its content are our exclusive property and must not be copied, reproduced, transmitted or communicated to any other party or used for purposes not expressly permitted by us

Item No.	Label	No		Article No.	Denomination	Type	Doc No	Note	Rev.
1	TT08	1	L	90510-5633	Temperature transmitter	TPT12 4-20mA Measuring range 0-160 deg. C	3283902-0101		
1	TT09	1	L	90510-5633	Temperature transmitter	TPT12 4-20mA Measuring range 0-160 deg. C	3283902-0101		
1	TT09	1	L	344254-0100	Sensor cable, EVT005	Cable length 10 m	No doc.		
1	V05	1	L	6-9613 32 4088	Single seat valve	SSV-W-25-200-NC-EPDM HP Shut off Maintainable actuator	1221121-0101		
1	V08	1	L	90513-3806	Regulating valve	3347/3372/6109 W51 NO SS/SS Kvs25 PN16 Cast body	1224799-0101		
1	V08	1	L	90512-8694	Valve connector	Type A, SAC-3P-10,0-PVC/A Cable 10m	No doc.		
1	V10	1	L	90512-7413	Seat valve	2000/32 G3/8 NC Kvs=2.4	3282610-0101		
1	V11	1	L	6-9613 36 3175	Single seat valve	SSV-W-51-210-NC-EPDM TP Change Over Maintainable actuator	1221122-0101		
1	V13	1	L	6-9612 62 8355	Butterfly valve	LKB-W-51-316L-EPDM-P85-NC	1215850-0101		
1	V14	1	L	6-9613 36 0067	Single seat valve	SSV-W-51-210-NO-EPDM Change Over	1221122-0101		
1	V15	1	L	6-9613 36 3185	Single seat valve	SSV-W-51-210-NO-EPDM TP Change Over Maintainable actuator	1221122-0101		
1	V16	1	L	6-9613 36 0055	Single seat valve	SSV-W-63.5-210-NC-EPDM Change Over	1221122-0101		
1	V17	1	L	6-9612 62 8356	Butterfly valve	LKB-W-63,5-316L-EPDM-P85-NC	1215850-0101		
1	V18	1	L	6-9612 62 8710	Butterfly valve	LKB-W-63.5-316L-EPDM-P85-NO	1215850-0101		
1	V44	1	L	6-31801 9423 5	Regulating valve	Samson 3321/3372 120cm2 GG DIN DN40 PN16 Kvs=25 SS/SS NC	1224796-0101		
1	V44	1	L	90512-8694	Valve connector	Type A, SAC-3P-10,0-PVC/A Cable 10m	No doc.		
1	V66.2	1	L	90512-7416	Seat valve	2000/32 W17.2*1.6 NC Kvs=2.4	3282610-0101		
1	V66	1	L	90512-7416	Seat valve	2000/32 W17.2*1.6 NC Kvs=2.4	3282610-0101		
1	V68	1	L	6-31880 0235 1	Back pressure valve	Designed for 8 bar at 175 deg.C Acc.to drawing 6-31880-0235 Rev.01	1223553-0101		
1	V74	1	L	6-9612 65 0173	Constant pressure valve	CPMI-2-W-51-Kvs 23 EPDM PTFE//	1214498-0101		
1	V75	1	L	6-9613 36 0458	Single seat valve	SSV-W-51-111-NC-EPDM RA Change Over	1221124-0101		
1	V76	1	L	6-9613 32 7362	Single seat valve	SSV-W-51-112-NO-EPDM RA Change Over	1221124-0101		
1	V80	1	L	6-31801 9971 2	Seat valve	2000/63 W25*1.2 NC 11bar(g) Kvs=19	1218030-0101		
1	V82	1	L	6-31801 9971 2	Seat valve	2000/63 W25*1.2 NC 11bar(g) Kvs=19	1218030-0101		
1	V83	1	L	6-9612 19 4001	Actuator	LKLA-T-85-NC	1215850-0101		
1	V83	1	L	90511-2615	Ball valve	Manual SMS-W 25x1.2 red. bore DV20+CVMM 3-way	1224238-0101		
1	V83	1	L	6-9612 49 1817	Mounting bracket	LKLA 85 for Meca-Inox ball valve For body size DN8-15	No doc.		
1	V84	1	L	6-31801 9975 1	Seat valve	2000/63 W25*1.2 NO 16bar(g) Kvs=19	1218030-0101		
1	V85.1	1	L	6-31801 9971 2	Seat valve	2000/63 W25*1.2 NC 11bar(g) Kvs=19	1218030-0101		
1	V85.2	1	L	6-31801 9971 2	Seat valve	2000/63 W25*1.2 NC 11bar(g) Kvs=19	1218030-0101		
1	V86	1	L	90522-3272	Regulating valve	8802GD/8694 70 Kvs 7.1 % NC EN10357-D W25.0x1.2 DN20 316L SS/SS Max. dP 16 bar(g)	1226927-0101		
1	V86	1	L	90518-7758	Sensor cable	15m, PVC, 8-pole 1xM12 angled, A-coded	No doc.		
1	V87	1	L	90503-5999	Seat valve	2000/G100 DN50 W NC SS/PTFE Kv 55	1218030-0101		

This document and its content are our exclusive property and must not be copied, reproduced, transmitted or communicated to any other party or used for purposes not expressly permitted by us

Tetra Spiraflo Lund, Sweden		ITEM LIST		
	R/3 Sales order No. 124408255	Machine No. / End customer Candia/T5844130774	Serial No. 1163426	Rev. 01
2016/08/08		Purchase order No. 0914092941	TPPC/SAM	

Item	Qty/level	Art./Doc.No.	Name	Notes
	1	6-164835306	Frame complete, C, Double, 2 modules	6m
	59	6-164836301	Screw, Frame	-
	12	6-164835401	Cover, C	6m
	72	6-164832402	Shell support, C85	-
	21	6-164832511	Shell, C85	1.4307/304L, 6m
	84	6-99035720	O-ring, C85, Shell	-
	16	6-164833607	Shell interconnection, C85	1.4404/316L
	1	6-164833807	Shell connection, C85, 0 degr.	1.4404/316L
	6	6-164833707	Shell connection, C85, 90 degr.	1.4404/316L
	3	6-164833903	Shell return, C85	6m
	10	6-99035374	O-ring, Union, Shell	d76
	13	6-164739601	Weld tube insert, C85, 12x16S-6	1.4404/316L
	8	6-164739602	Weld tube insert, C85, 12x16C-6	1.4404/316L
	84	6-99035718	O-ring, C85, Insert	-
	16	6-164817601	Return bend, C85, Elliptic, Multitube	1.4404/316L
	8	6-164761201	Product flange, C85, Multitube	1.4404/316L
	2	6-164835601	Tube return, C85, Close, Multitube	6m
	2	6-99035338	O-ring, Union, Tube return	d51
	32	6-164837613	Assembly kit, C85, Elliptic/drainable	-
	10	6-164837611	Assembly kit, C85	-
	42	6-164827501	Product seal, C85, Multitube	EPDM
	4	6-164837503	Return bend HT, C85/108	1.4404/316L, d51
	1	6-164836109	Holding tube, C85/108, Double	1.4404/316L, Reduced, d51, X=4980
	4	6-164836003	Holding tube, C85/108, Single	1.4404/316L, 6m, d51
	1	6-99030508	Tube holder, C85	d51
	2	6-99030521	Tube holder HC-HC, C85	d51
	10	6-99035338	O-ring, Union, Holding tube 1	d51
	1	6-164806102	Special tool	d51
	10	6-164833414	Blind, C85	-
	44	6-164837703	Tube support, C85	d53
	2	6-164837901	Templets	-
	1	6-164834901	Commissioning kit, C85	-
	1	2991459-0009	Inspection, C, Inspecta	-
	1	1163426-01	Isometric and Layout drawing, C85	-
	1	6-164834900	Assembly & spare part drawing, C85	-
	1	6-164834200	Pressure vessel drawing, C85, PED	-

Product volume	323 litre
Net weight	1468 kg
Gross weight	1468 kg
Filled weight	2146 kg

Unit size:
W=1020, H=1200, L=6370

Type	Manuf.No.	Qty.	Max press.		Max temp.		Volume		
			Shell	Tube	Shell	Tube	Shell	Tube	
			kPa	kPa	C	C	litre	litre	
CM 85/12x16C-6	1163426 -01 -08	8	1600	4000	180	180	16.9	12.4*	1.4404/316L, *) incl.bend volume
CM 85/12x16S-6	1163426 -09 -21	13	1600	4000	180	180	16.9	12.4*	1.4404/316L, *) incl.bend volume

Rev	Description	Rev. By	Appr. By	Date

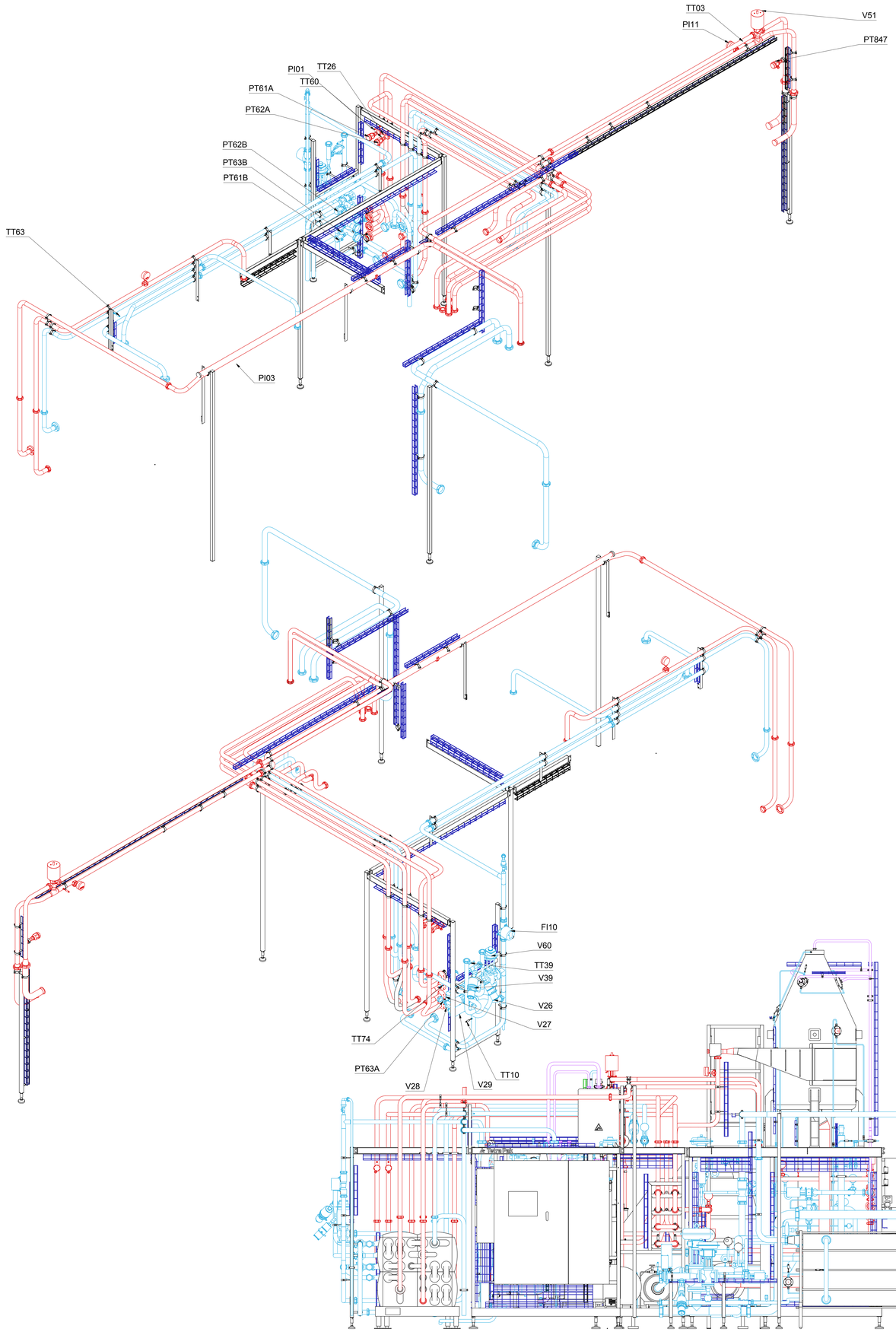

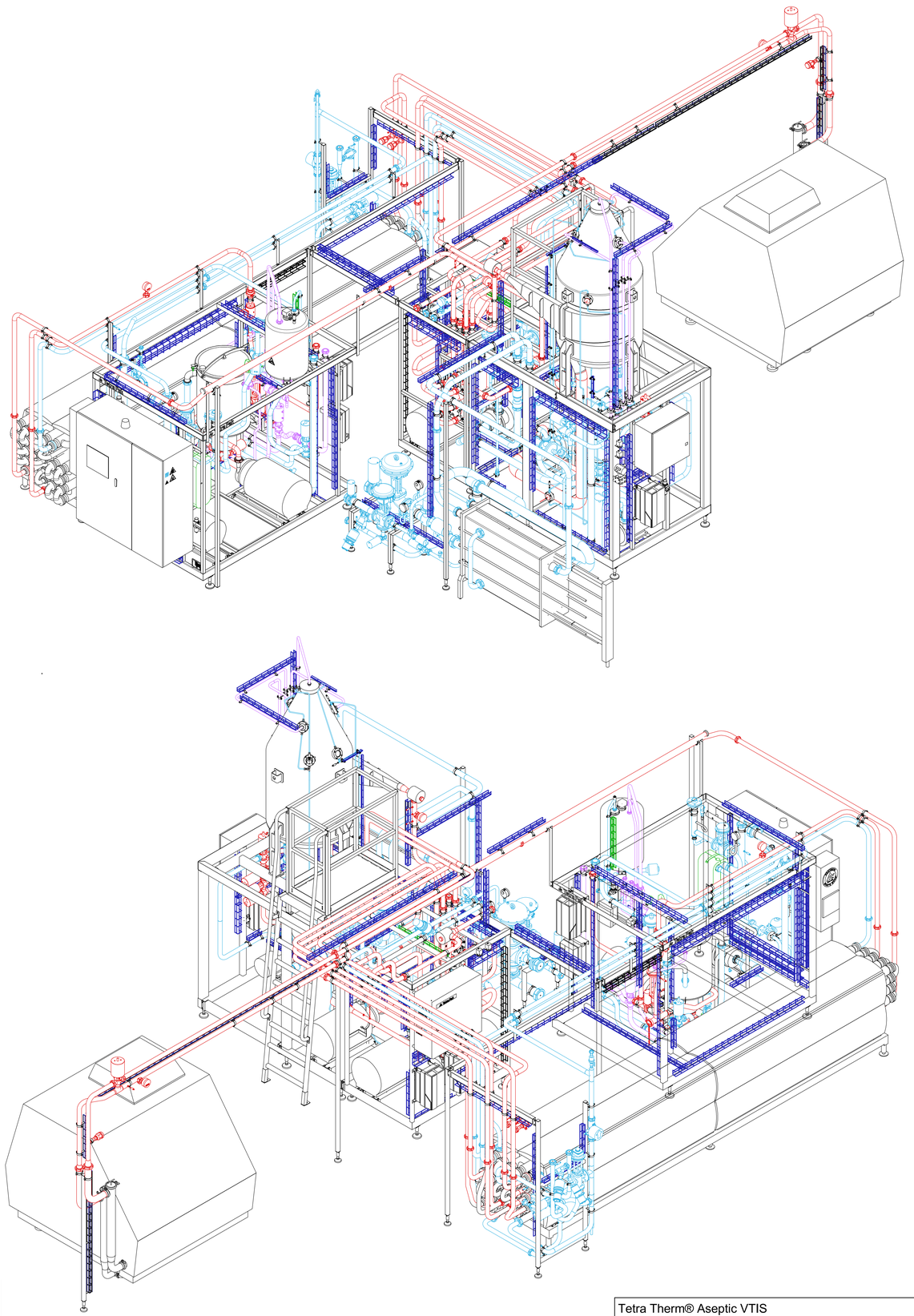

© Tetra Pak. All rights reserved, any copying, transmittal or disclosure subject to Tetra Pak's written approval.

Tetra Therm® Aseptic VTIS

Assembly layout ISO

Serial No.	Issued By	Appr. By	Date	File Name
T5844130774	HNK	CBG	2016-09-29	32420-3852.dwg
		Format A0	Template	
Tetra Pak®		Scale 1:20	Document No 32420-3852	Revision 00

Rev	Description	Rev. By	Appr. By	Date

Pos	Connection Point	Label	Dim.	Heigh
1	Product inlet	V13	Ø51	+2280
2	Product outlet	V78	Ø51	+2280
3	Product return	CV07	Ø51	+2280
4	Steam 7 bar	V344	DN25	+2330
5	Steam 7 bar	V44	DN50	+2280
6	HNO3 inlet	V82	Ø25	+2280
7	NAOH inlet	V80	Ø25	+2280
8	CIP return	V76	Ø51	+2280
9	Ice water inlet	V380	Ø76	+640
10	Tower water inlet	V390	Ø101	+630
11	Water inlet	V14	Ø63	+2280
12	Water inlet	V66/V66.2	Ø25	+2280
13	Water inlet	V329	Ø25	+2280
14	Outlet Safety valve	V347	Ø76	+160
15	Drain	V14	Ø51	+160
16	Drain	CR313	Ø25	+160
17	Drain	V76	Ø51	+160
18	Drain	V17	Ø63	+160
19	Drain	V18	Ø63	+160
20	Drain	BTD01	Ø63	+160
21	Drain	M10	Ø10	+160
22	Drain	V84/BTD02	Ø38	+160
23	Drain	V68	Ø25	+160
24	Drain	BTD01	Ø102	+190
25	Drain	V83	Ø25	+160
26	Drain	V15	Ø51	+160
27	Drain	DV10	TH 1/2"	+775
28	Pneumatic Air	PC301	-	+630
29	Pneumatic Air	PC01	-	+670
30	EI power TA Flex/VTIS	-	-	-
31	Condensate	CR44/CR41	Ø38	+60
32	Future Connection - Spiral HC	From SPHC	Ø51	+2280
33	Future Connectrion - Spiral HC	To SPHC	Ø51	+2280
34	Drain	THE Sec 4	Ø51	+160
35	Ice water	V26	Ø51	+1710
36	Ice water return	V28	Ø51	+1710
37	Drain	V28	Ø51	+160
38	Drain	V27	Ø51	+160
39	Drain	DV11	Ø25	+160
40	EI power homogenizer			-
41	EI power starter cabinet			-

See tecnical data Tetra Therm Aseptic VTIS
See tecnical data Tetra Pak Tubular Heat Exchanger
See tecnical data Tetra Alex 400

EQUIPMENT	Approx. weight Brutto, kg	No: load-point
Main Module	2500	4
DHM Module	3700	10
Homogenizer Tetra Alex 400	6500	7
Tubular Heat Exchanger	2334	6
PHE	850	3

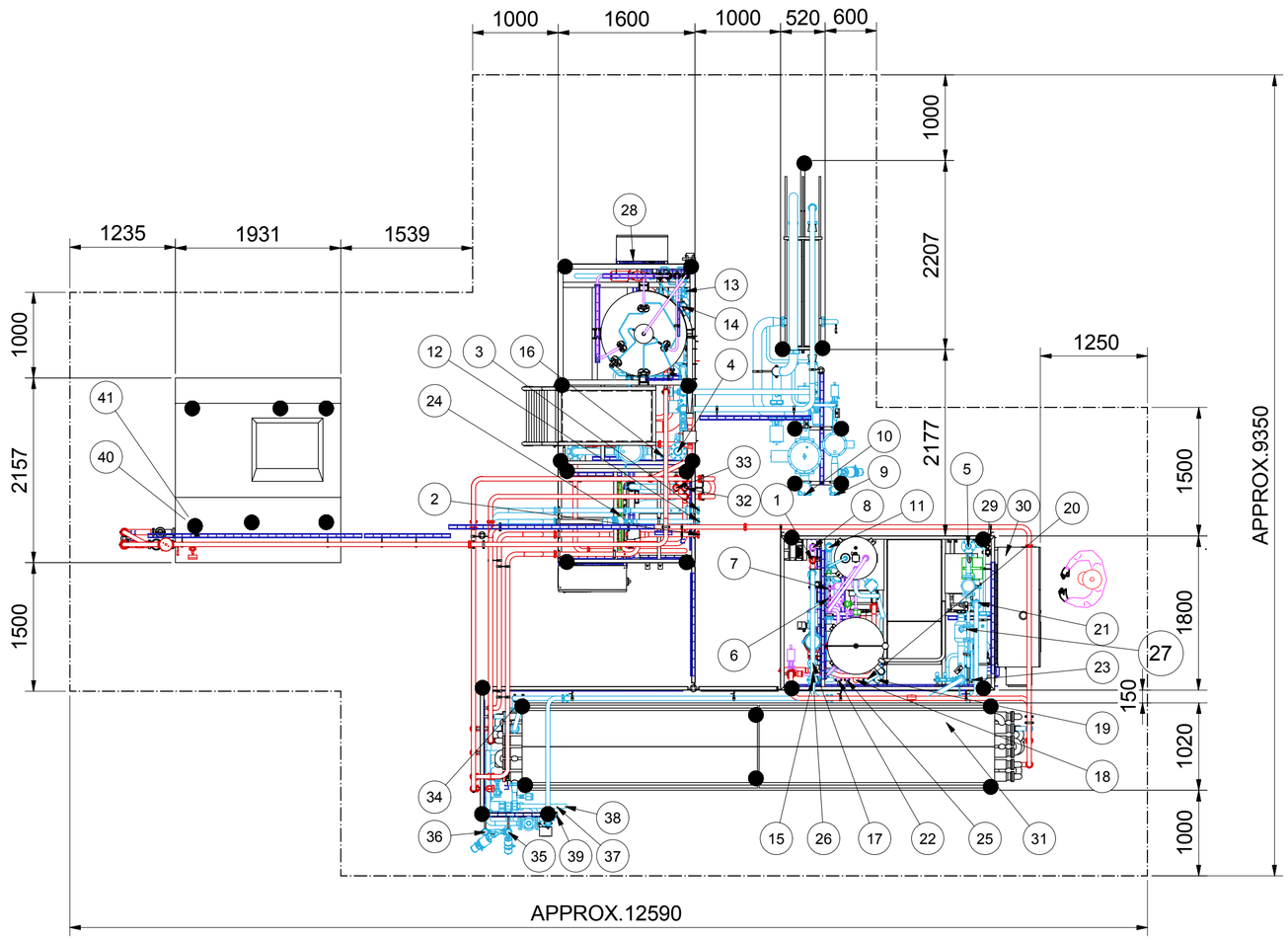

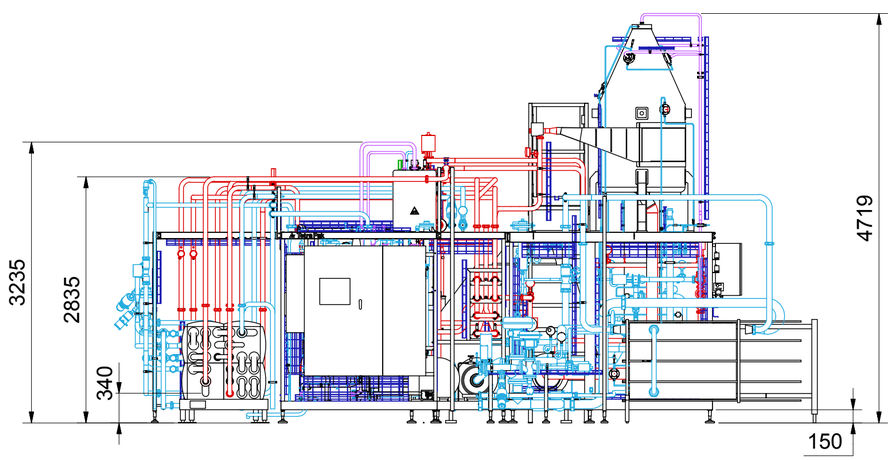

Recommended operation and service area

Load point

Min service height feed module: 3900mm
Min service height DHM: 4840mm

Tetra Therm® Aseptic VTIS

Instalation Layout

Serial No	Issued By	Appr. By	Date	File Name
T5844130774	HNK	CBG	2016-09-29	32420-3853.dwg
		Format A2	Template	
Tetra Pak®		Scale 1:50	Document No 32420-3853	Revision 00

© Tetra Pak. All rihts reserved; any copying, transmittal or disclosure subject to Tetra Pak's written approval.

Rev	Description	Rev. By	Appr. By	Date

Spiral Holding Cell

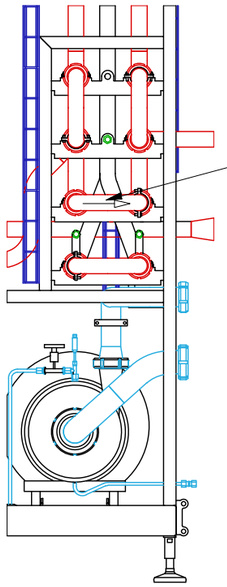

Spiral HC disconnected

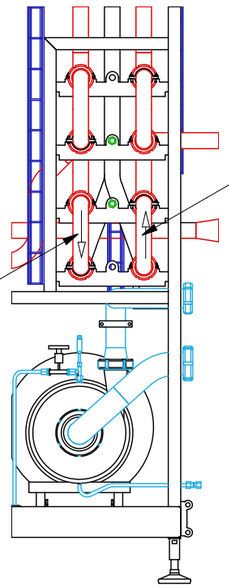

Spiral HC connected

Holding Cell

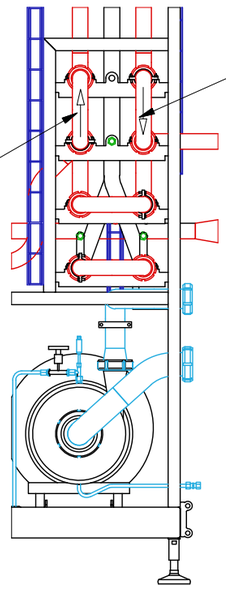

HC 20s 11000 l/h

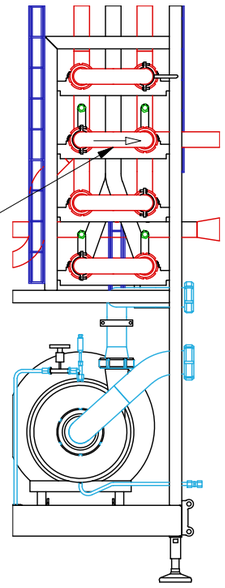

HC Disconnected

© Tetra Pak. All rihts reserved; any copying, transmittal or disclosure subject to Tetra Pak's written approval.

Tetra Therm® Aseptic VTIS

Configuration layout

Serial No	Issued By	Appr. By	Date	File Name
T5844130774	JCM	JELA	7/21/2016	32420-3854.dwg
		Format: A3	Template	
Tetra Pak®		Scale: --	Document No: 32420-3854	Revision

Tetra Pak	Our ref.	166341_1_A
Tetra Pak Processing Components	Your ref.	T5844130774
2016年8月8日	Drawing No.	1163426

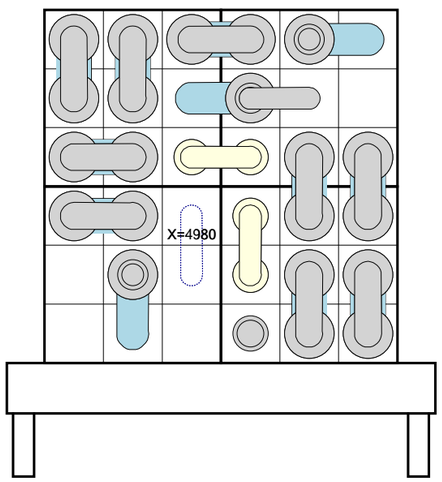

Bends/connections - Front view

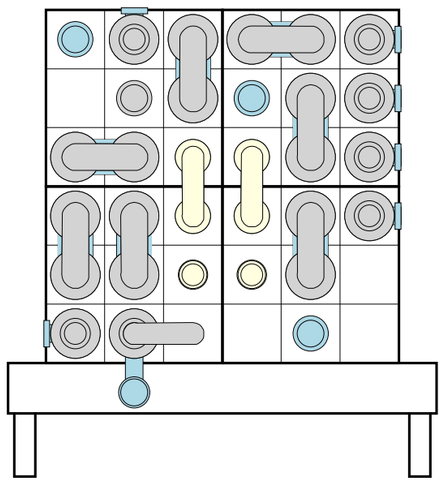

Bends/connections - Back view

Tube side Shell side Holding tube

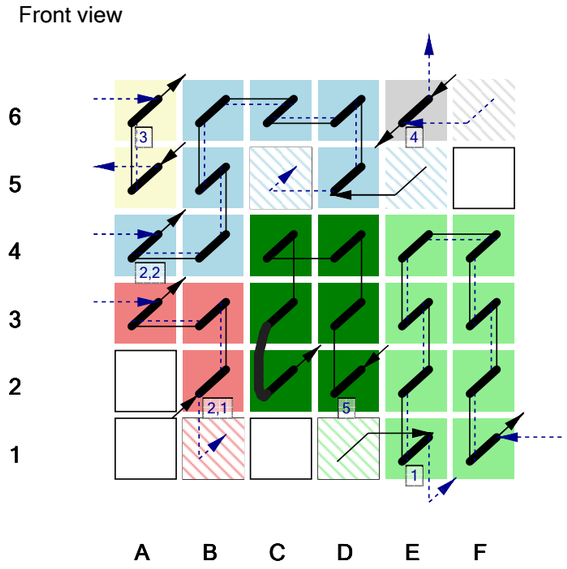

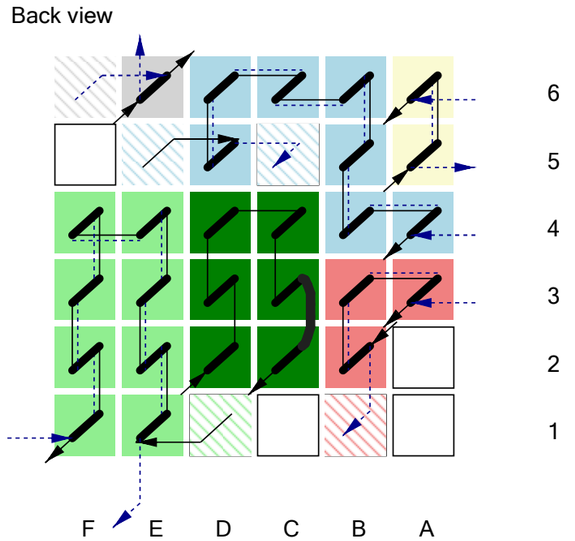

Section	Positions	Connections	A	B	C
1	D1 Tube in	Male part SMS Ø51	540	340	266
1	F1 Tube out	Welding connection Ø51x1.5	820	340	266
1	F1 Shell in	Male part SMS Ø76	914	340	105
1	E1 Shell out	Male part SMS Ø76	680	200	266
2,1	B2 Tube in	Welding connection Ø51x1.5	260	480	266
2,1	A3 Tube out	Welding connection Ø51x1.5	120	620	266
2,1	A3 Shell in	Male part SMS Ø76	26	620	105
2,1	B1 Shell out	Male part SMS Ø76	260	340	266
2,2	E5 Tube in	Male part SMS Ø51	680	900	266
2,2	A4 Tube out	Welding connection Ø51x1.5	120	760	266
2,2	A4 Shell in	Male part SMS Ø76	26	760	105
2,2	C5 Shell out	Male part SMS Ø76	400	900	266
3	A5 Tube in	Welding connection Ø51x1.5	120	900	266
3	A6 Tube out	Welding connection Ø51x1.5	120	1040	266
3	A6 Shell in	Male part SMS Ø76	26	1040	105
3	A5 Shell out	Male part SMS Ø76	26	900	105
4	E6 Tube in	Welding connection Ø51x1.5	680	1040	266
4	E6 Tube out	Welding connection Ø51x1.5	680	1040	266
4	F6 Shell in	Male part SMS Ø76	820	1040	266
4	E6 Shell out	Male part SMS Ø76	680	1134	105
5	D2 Tube in	Male part SMS Ø51	540	480	266
5	C2 Tube out	Male part SMS Ø51	400	480	266

Torque	
M8	16 Nm
M10	32 Nm
M12	56 Nm

Weight	
Net weight	1656 kg
Gross weight	
Filled weight	2334 kg

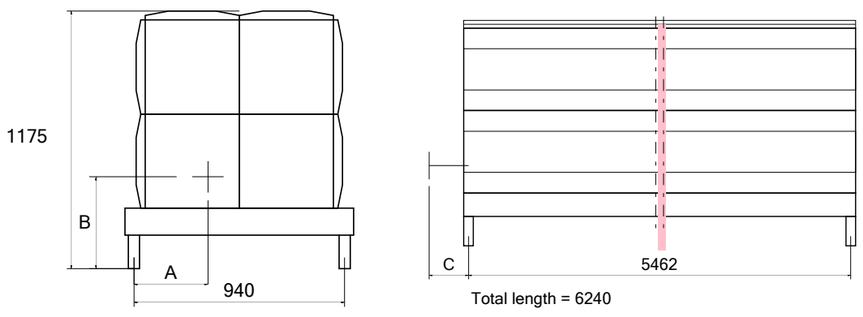

Section	Tube type	Quantity	Tube side	Shell side	Bend	Note
1	CM 85/12x16C-6	8	1.4404 / EPDM	1.4307/304L	316L 0.8 mm (D1)	
2,1	CM 85/12x16S-6	3	1.4404 / EPDM	1.4307/304L	316L 0.8 mm (D1)	
2,2	CM 85/12x16S-6	7	1.4404 / EPDM	1.4307/304L	316L 0.8 mm (D1)	
3	CM 85/12x16S-6	2	1.4404 / EPDM	1.4307/304L	316L 0.8 mm (D1)	
4	CM 85/12x16S-6	1	1.4404 / EPDM	1.4307/304L	316L 0.8 mm (D1)	
5	HT 51S (C 85)	4x6s, 1x5.02d	1.4404 / EPDM		316L 1.5 mm (D1)	Total length = 35120

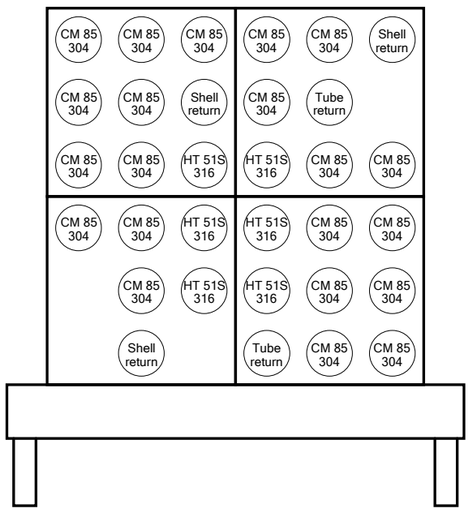

Shells/Holding tubes - Front view

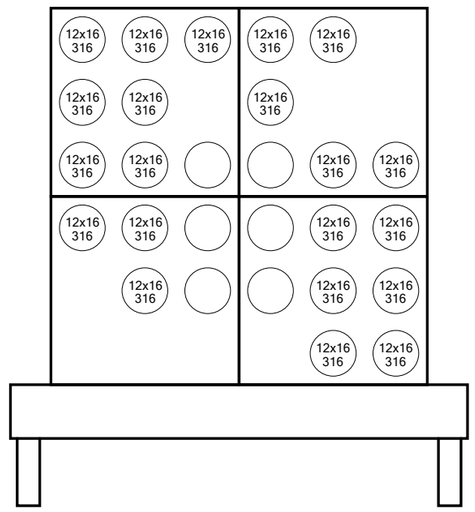

Inserts - Front view

Drawing No. 1163426-02

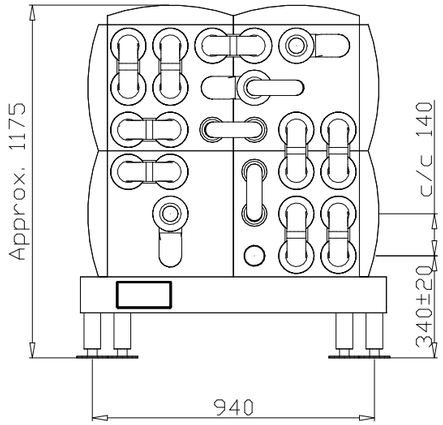

Front view

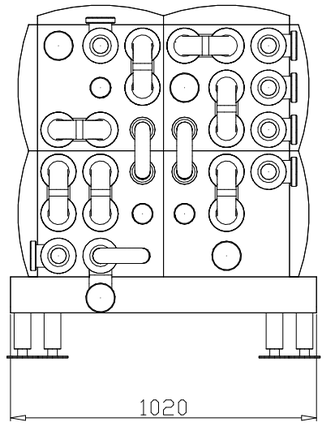

Back view

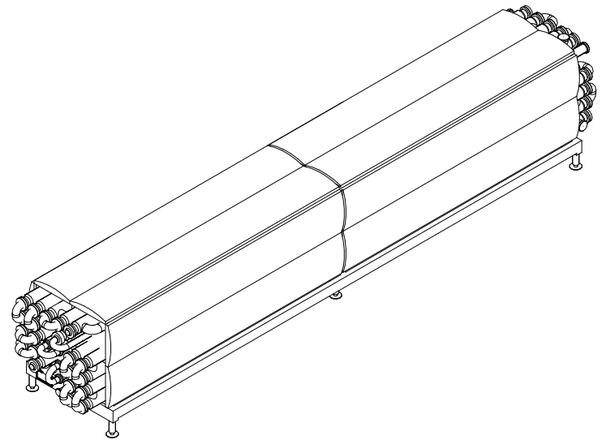

Isometric view

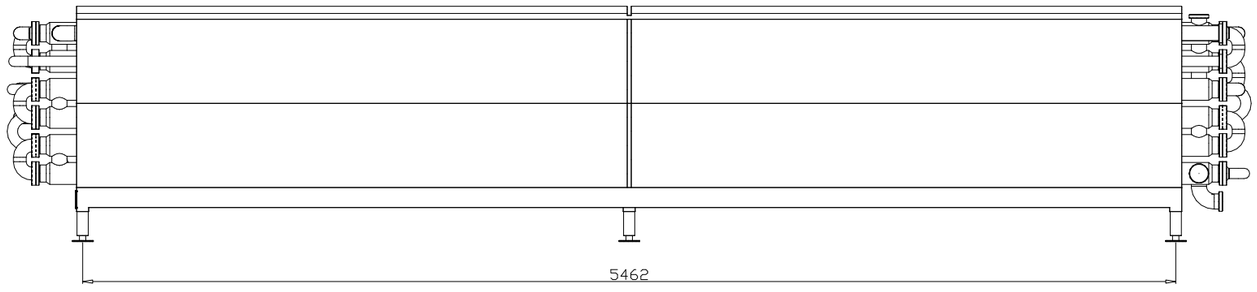

Side view

Torque		
M8	16	Nm.
M10	32	Nm.
M12	56	Nm.

Qty.	Item	Article No.	Name/Designation	Material (final condition) Blank	Pattern No./Note
	Assembly No.				

Title
C85
Layout DRW
Order: 0914092941/T5844130774

Tetra Pak
LUND SWEDEN

Special requirements

Surface roughness indicated by R_a value.

First angle projection Method E

Scale	Dept.	Date
	CHT	160808
Drawn	Checked	
Designed SAM	Appr. SAM	
Class No.		

Complementary doc. No.
Quotation Nr.
166341_1_A

Drawing No.
1163426-02

BL01322

Rev No.	Revision	Date	Revised	Checked	Appr.

Replaces drawing No.

Revision No.

This document and its contents are our exclusive property and must not be copied, reproduced, transmitted or communicated to any other party or used for purposes not expressly permitted by us.

Only to the extent expressly agreed by us this document may constitute a contractual obligation on our part.

CAD–DRWG

BL01352

Service Media

TechPub_2614345_0106 - TeM_1227937_0101.fm

This page intentionally left blank

TechPub_2614345_0106 - TeM_1227937_0101.fm

Instrument Air (IA) . . . . . 1 - 5

General Requirements . . . . . 1 - 5

Sanitary air (SA) . . . . . 1 - 6

General requirements . . . . . 1 - 6

Steam - in contact with product . . . . . 1 - 7

General requirements . . . . . 1 - 7

Steam . . . . . 1 - 8

General Requirements . . . . . 1 - 8

Water . . . . . 1 - 9

General Requirements . . . . . 1 - 10

TechPub_2614345_0106 - TeM_1227937_0101.fm

This page intentionally left blank

TechPub_2614345_0106 - TeM_1227937_0101.fm

Instrument Air (IA)

General Requirements

For consumption and pressure data, see ‘Technical data’.

- Oil, invariably introduced into compressed air from oil-lubricated compressors must be removed as completely as possible. Oil is a serious pollutant, which is hard to remove from instruments.
- Water will condense within the pneumatic system in quantities varying with the humidity of the input air, the temperature before and after the compressor, or after a temperature drop in a section of the air line routed through a cold zone.
- To avoid condensation, the air must be dried to an extent determined by the lowest temperature after the drier.
  Air expands and cools down in orifices and nozzles inside instruments with condensation as a result.
  For this reason, the dew point of the air at the instrument inlet must be at least 10°C below the lowest ambient temperature surrounding the equipment.
- Dirt in the form of solid particles down to a size of 10 microns (0.01 mm) must be removed, for instance by means of filters or filter-equipped reducing valves.

  Position the filters so they can be seen and easily checked. The filters must be checked daily and their cartridges or inserts renewed whenever necessary.
- The air supply line must include a master shut-off valve.
- Before connecting the air supply to the process line, the air pipes must be blown clear from any installation residues.
- The volume of the storage (tank) for compressed air should be approximately 6 times the required capacity/h.

CAUTION
Noncompliance with these requirements may endanger the equipment.

Parameter	**Value**
Oil content	max.10 mg/l
Water content	none
Dew point	min. temperature 10°C below ambient
Solid particles	max. 0.01 ppm (mg/l)

TechPub_2614345_0106 - TeM_1227937_0101.fm

Sanitary air (SA)

General requirements

For consumption and pressure data, see **'Technical data'**.

The sanitary air must be dry and clean with no traces of oil.

- Use a compressor without oil lubrication in the cylinder in order to achieve oil-free air.
- Compressors are available from Tetra Pak as optional equipment.
- In order to produce dry air, the compressor can be equipped with an aftercooler and/or an air drier.
- Dirt in the form of solid particles down to a size of 10 microns (0.01 mm) must be removed, for instance by means of filters or filter-equipped reducing valves.
- Position the filters so they can be seen and easily checked. The filters must be checked daily and their cartridges or inserts renewed whenever necessary.
- The air supply line must include a master shut-off valve.

Note! The sanitary air must not be used as instrument air.

Parameter	**Value**
Oil content:	none
Solid particles:	max. 0.01 mm
Max. dew point:	Min. 6 ^{0}C below ambient temperature For the sterile air filter, a pressure dew point of +8 ^{0}C is sufficient
Solid particles:	max. 0.01 mm

CAUTION
Noncompliance with these requirements may damage the equipment.

TechPub_2614345_0106 - TeM_1227937_0101.fm

Steam - in contact with product

General requirements

For consumption and pressure data, see **'Technical data'**.

The steam must be of good quality and free from condensate and air.

Supply line:

- The steam supply line must be equipped with a pressure controller in order to maintain a constant feed pressure.
- Condensate traps must be provided close to the process line in order to produce dry steam.
- A master shut-off valve must be installed in the steam supply line.
- Steam pipes must be insulated as protection against personal injury.
- Before connecting the steam supply to the process line, the steam pipes must be blown clear with repeated blasts of steam, lasting 5 - 10 minutes.

Parameter	**Value**
Quality	dry saturated steam
Humidity	max. 5% condensate
pH	7.0 - 8.0
Chloride	max. 8 ppm
Solid particles	none
Turbidity	max. 3 ppm $KMnO_4$
K and Na	max. 0.01 mg/kg
Fe	max. 0.02 mg/kg
Cu	max. 0.003 mg/kg
NO_2	max. 0.02 ppm
Conductivity	0.3 mS
Traces of organic matter	none

CAUTION
Noncompliance with these requirements may damage the equipment.

TechPub_2614345_0106 - TeM_1227937_0101.fm

Steam

General Requirements

For consumption and pressure data, see **'Technical data'**.

The steam must be of good quality and free from condensate and air.

Supply line:

- The steam supply line must be equipped with a pressure controller in order to maintain a constant feed pressure.
- Condensate traps must be provided close to the process line in order to produce dry steam.
- A master shut-off valve must be installed in the steam supply line.
- Steam pipes must be insulated as protection against personal injury.
- Before connecting the steam supply to the process line, the steam pipes must be blown clear with repeated blasts of steam, lasting 5 - 10 minutes.

Parameter	**Value**
Quality:	dry saturated steam
Humidity:	max. 5% condensate
pH:	8.5 - 9.2
Carbon dioxide:	max. 2ppm
Chloride:	max. 8 ppm
Solid particles:	max. 0.5 mm
Turbidity:	max. 3 ppm $KMnO_4$

CAUTION
Noncompliance with these requirements may endanger the equipment

TechPub_2614345_0106 - TeM_1227937_0101.fm

Water

For consumption and pressure data, see **'Technical data'**.

- The water supply pipe must be equipped with a master shut-off valve.
- The supply pressure must be constant.
- Water used in the plant must be soft (by watersoftening if necessary) and clean in order to avoid deposits. Deposits due to water of inferior quality circulating in the plant can cause malfunction of vital parts.

Water Hardness

If the water is hard (high concentration of Calcium carbonate, $CaCO_3$), deposits will accumulate in devices such as valves. This process is accelerated at high temperatures. Cleaning results and detergent consumption will also be affected due to hard water. These effects become more severe the harder the water.

Corrosion

In order to minimize corrosion the water should:

- have low concentrations of chlorine (Cl_2) and/or chloride ions (Cl^-),
- be slightly alkaline. (The pH value is easily determined by means of litmus paper or a pH meter).

CAUTION

Noncompliance with these requirements may endanger the equipment

TechPub_2614345_0106 - TeM_1227937_0101.fm

General Requirements

Water used for cooling, product flushing, rinsing and cleaning should meet the WHO guidelines (stated below) or the European drinking water directive

Parameter	**Value**
Taste	none
Smell	none
Turbidity	max. 3 NTU
Colour	max. 20 mg/l Pt
Oxygen demand	max. 20 mg/l $KMnO_4$
Tot. dissolved solids	max. 500 mg/l
pH	7 - 8.5
Hardness	<10° dH (max. 180 mg/l $CaCO_{3)}$
Ammonium	trace amounts
Ammonia	max. 0.5 mg/l NH_4
Iron	none
Manganese	none
Nitrate	max. 30 mg/l NO_3
Sulphate	max. 100 mg/l SO_4
Chlorine (M, S)	max. 0.2 mg/l Cl_2
Chloride* (M, S)	max. 30 mg/l Cl^-
Aggressive carbon acid	max. 0 mg/l CO_2
Total amount of bacteria	max. 100/ml
Total amount of 35°C coliform bacteria	max. 1/100 ml
Total amount of 44°C coliform bacteria	0/100 ml
Copper	max. 0.05 mg/l Cu
Zinc	max. 1.0 mg/l Zn

* = for water used as heating/cooling media at high temperatures, the Chloride (Cl-) content should be below the limits in the table below:

Temperature (C°)	**AISI 304 (Cl-) in mg/L (ppm)**	**AISI 316 (Cl-) in mg/L (ppm)**
< 60	30	30
60 - 100	20	30
100 - 120	10	30
120 - 140	5	10
140 - 160	1	5

TechPub_2614345_0106 - TeM_1227937_0101.fm

Feed Water to Steam Boiler

Parameter	Value
as stated above	
Hardness	max. 0.1° dH
Aluminum	max. 0.2 mg/l Al
pH	8.5 - 9.0
Silicon acid	max. 30 mg/l

TechPub_2614345_0106 - TeM_1227937_0101.fm

This page intentionally left blank

TechPub_2614345_0106 - TeM_1227937_0101.fm

Tetra Pak

External Up/Downstream Equipment

TechPub_2614345_0106 - TeM_1249029_0101.fm

This page intentionally left blank

TechPub_2614345_0106 - TeM_1249029_0101.fm

Upstream Equipment. . . . . 1 - 5

Downstream Equipment . . . . . 1 - 6

TechPub_2614345_0106 - TeM_1249029_0101.fm

This page intentionally left blank

TechPub_2614345_0106 - TeM_1249029_0101.fm

Upstream Equipment

(Product feeding system)

General Requirements

- To allow variations in the flow and to keep a constant pressure, product are to be provided by a centrifugal pump
- The pump is to be controlled from the sterilizer
- The return line is to be cleaned together with the product supply line
- Cleaning of the product supply and return lines are to be arranged by the customer

TechPub_2614345_0106 - TeM_1249029_0101.fm

Downstream Equipment

(E.g. filling machine)

General Requirements

- Outlet lines are to be as short as possible with a minimum of unions
- Product remnants are to be collected in a reject tank
- Outlet pipes are to be sterilized with water at 137°C
- Outlet pipes must always allow flow (no stop valves)
- Outlet lines must allow part of the product to flow back to the sterilizer by direct filling

CAUTION

Noncompliance with these requirements may damage the equipment.

TechPub_2614345_0106 - TeM_1249029_0101.fm

Tetra Pak

Cleaning

TechPub_2614345_0106 - TeM_1231256_0101.fm

This page intentionally left blank

TechPub_2614345_0106 - TeM_1231256_0101.fm

Recommended Detergents . . . . . 1 - 5

TechPub_2614345_0106 - TeM_1231256_0101.fm

This page intentionally left blank

TechPub_2614345_0106 - TeM_1231256_0101.fm

Recommended Detergents

Lye

Chemical:	NaOH
* Concentration:	35%
** Concentration during cleaning:	1.5 - 2% lye

Acid

Chemical:	HNO_3
Concentration:	50%
** Concentration during cleaning:	1-1.5% acid

WARNING

Chemical hazard

Cleaning solution contains Caustic soda (NaOH) or Nitric acid (HNO3).
These chemicals may cause severe burning to skin and eyes. Use protective clothes, goggles and gloves during handling.
If exposed - wash with water for at least 15 minutes.
Seek medical assistance.
Follow the instructions given by the supplier.

* If the lye detergent origin from solids, it must be carefully mixed in order to avoid solid particles that will cause problems for the feed pumps.

** The equipment will be adjusted during commissioning to achieve the required cleaning detergent concentration.

TechPub_2614345_0106 - TeM_1231256_0101.fm

General recommendations of feed pump installation

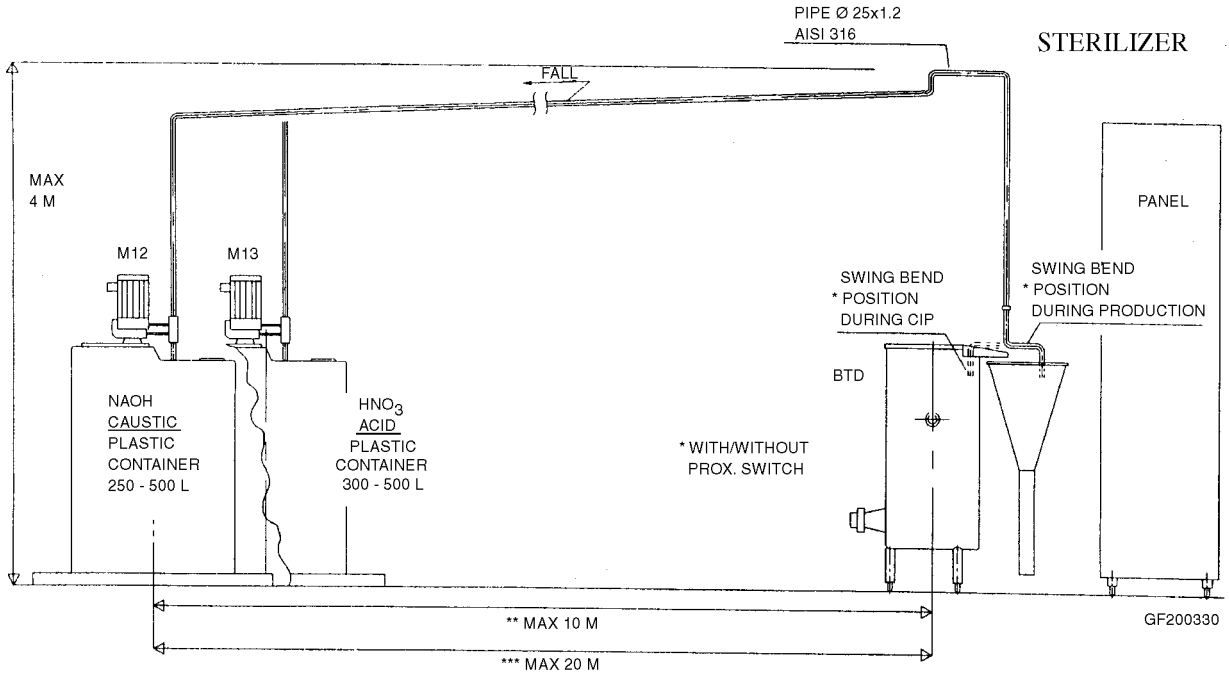

CIP Header batch

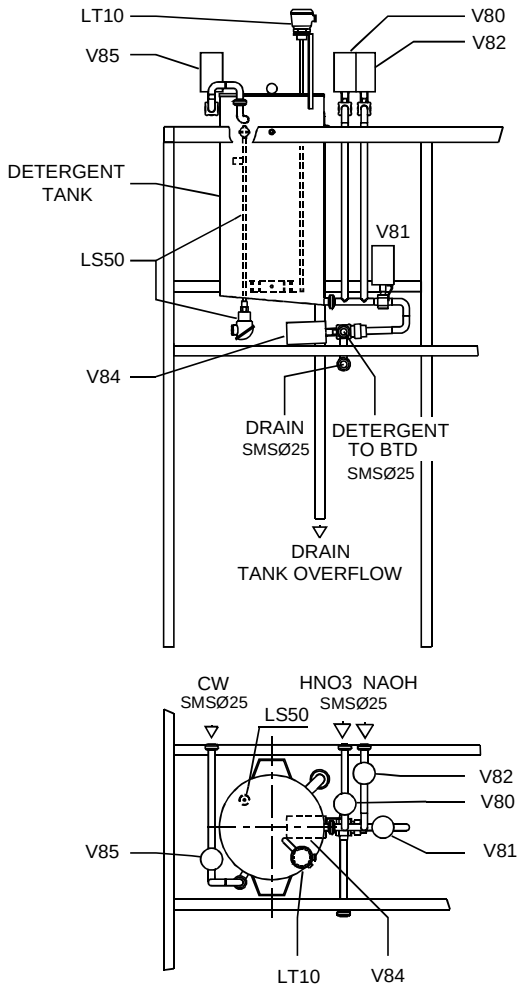

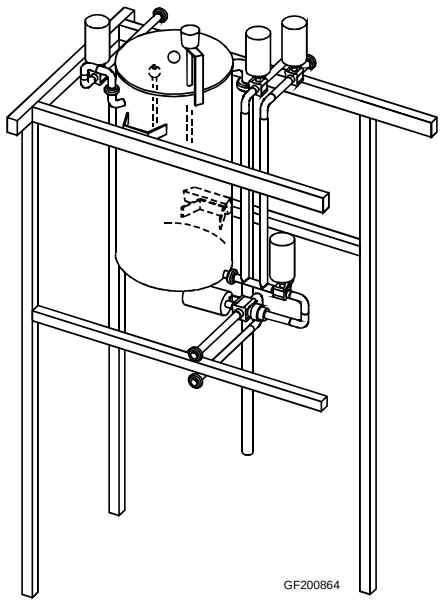

TechPub_2614345_0106 - TeM_1231256_0101.fm

Tetra Pak

Machine number: **T5844130774**
Issuer: HU
Date of issue:161025

Tetra Therm Aseptic VTIS 10

Rev. no	Appr.	Date	Descr.

STEP NAME	STEP	COND	REG No	M2	M4	M305	M6	M308	M10	M311	M12	M13	Y822/823	V05	V08	V11	V13	V14	V15	V16	V17	V18	V26	V27	V39	V41	V44	V47	V51	V60	V61	V63	V66	V66.2	V74	V75	V76	V78	V80	V82	V83	V84	V85.1	V85.2	V86	V87	V311	V312	V313	V314	V315	V316	V320	V321	V322	V323	V330	V331	V334	V339	V344	V354	V362	V380	V381	V382	V383	V385	V390	V391	V392	V393	V395	V810	V811	V821	V820	
					V328				V10	V329								*67					TC26	V28	TC39	TC41							

Machine number: **T5844130774**
Issuer: HU
Date of issue:161025

Tetra Therm Aseptic VTIS 10

Rev. no	Appr.	Date	Descr.

STEP NAME	STEP	COND	REG No	M2	M4	M305	M6	M308	M10	M311	M12	M13	Y822/823	V05	V08	V11	V13	V14	V15	V16	V17	V18	V26	V27	V39	V41	V44	V47	V51	V60	V61	V63	V66	V66.2	V74	V75	V76	V78	V80	V82	V83	V84	V85.1	V85.2	V86	V87	V311	V312	V313	V314	V315	V316	V320	V321	V322	V323	V330	V331	V334	V339	V344	V354	V362	V380	V381	V382	V383	V385	V390	V391	V392	V393	V395	V810	V811	V821	V820	
					V328				V10	V329														V27													

SUBPROGRAM FOR CIP HEADERBATCH

STEPNAME	STEP	COND	REG No	M12	M13	V16	V17	V18	V80	V81	V82	V83	V84	V85.1	V85.2	V86 LC10	V87
READY	500	Req dos * LS51				*28	*28	*28		*28			*28	*28	*28	*28	
FILL UP DOSING PIPE	501	TIME	R193											X			
DRAIN OVER FLOW	502	LS10≤LL	R194														X
METERING CONC.	504	LS10 * LS08	R196	*26	*27				*23	X	*24	X	X				
DOSING	505	LS10≤LL	R197									X	X			X	
EMPTYING DOSING PIPE	506	TIME * LS51 (5 sec)	R198									X	X			X	
FILL UP TANK WITH WATER	507	LS10	R199							X		X	X		X		
FLUSH 1 TANK TO BTD	508	LS10≤LL	R200									X	X			X	
CHANGE TO DRAIN	509	LS51 * V83FB	R201										X			X	
FLUSH 2 TANK TO DRAIN	510	TIME	R202							X			X		X	X	
EMPTYING PIPE TO DRAIN	511	LS51	R203							X			X			X	
FLUSH 3 TANK TO DRAIN	512	TIME	R204											X		X	
EMPTYING PIPE TO DRAIN	513	LS51	R205													X	
FILL UP TANK WITH WATER	514	LS10	R206									X		X			
FLUSH 4 TANK TO BTD	515	LS51	R207									X				X	
EMPTYING PIPE TO DRAIN	516	TIME * !Circ step	R208													X	
READY	500																
	STEP	COND	REG No	M12	M13	V16	V17	V18	V80	V81	V82	V83	V84	V85.1	V85.2	V86	V87

*23= If caustic requested and not level reached
*24= If acid requested and not level reached
*25= If level higher than calculated set-point
*26= After time if caustic requested and not level reached
*27= After time if acid requested and not level reached
*28= Activater acording to main step
*33 = Activated if LT08 > SP + hysteresis

SUBPROGRAM FOR RINSE SPRAY CONDENSER

	Step	Cond	Reg										
				M308	V311	V312	V313	V314	V315	V316	V334	V320	V321	V362
				*	*	*	*	*	*	*	*	*	*	*
PARKING POSITION	600													
EMPTY SC	601	LS04 * time	R217	*38	X	X	B			X				*38
WAIT FOR PURE W	602	VOL.	R218		X	X				X	X	*39		*38
FILL PURE WATER I	603	VOL.	R219	*38			B	B	X	X	X	X	X	*38
RINSE NOSSLE	604	TIME	R220	*38			A	B	X	X	X	X	X	*38
FILL PURE WATER II	605	VOL.	R221	*38			B	B	X	X	X	X	X	*38
RINSE V314	606	TIME	R222	*38			B	A	X	X	X	X	X	*38
FILL PURE WATER III	607	VOL.	R223	*38			B	B	X	X	X	X	X	*38
RINSE SERIAL FW	608		R224	*38			B	B	X	X	X	X	X	*38
				M308	V311	V312	V313	V314	V315	V316	V334	V320	V321	V362

* = act according to main sequence
*38 = Fixed analoge setting 0 - 100 %
*39 = Flip when remaining time/volume in step <= X

SUB FUNCTION LEVEL CONTROL

	LC305	LC3066	M5	V51
Step 1 - 10	auto	man		X
Step 10 - 85 and no homogenizer fault	man	auto	*38	
Step 10 - 85 and homogenizer fault	auto	man		X
HT CIP and no homogenizer fault	man	auto	*38	
HT CIP and homogenizer fault	auto	man		X
LT CIP	auto	man		X

0

* = activated acording to main sequense
** = A activated if machine running and B not activated

*90 = A normally activated (C if PHE extra cooler connected)
*91 = Activated, deactivated if "Fill air in damper" selected from step 400

UHT

V100
A
V100

V100
A
V100

List of content

	Page
Communication path Desription	2
Communication path A	3
Communication path B	4
Communication path C	5
Communication path D	6
Communication path E & F	7
Communication path 1	8
Communication path 2	10
Communication path 3	12
Communication path 4	14
Communication path 5	18
Communication path 6	19

© 2009 Tetra Pak

Communication path

Desription

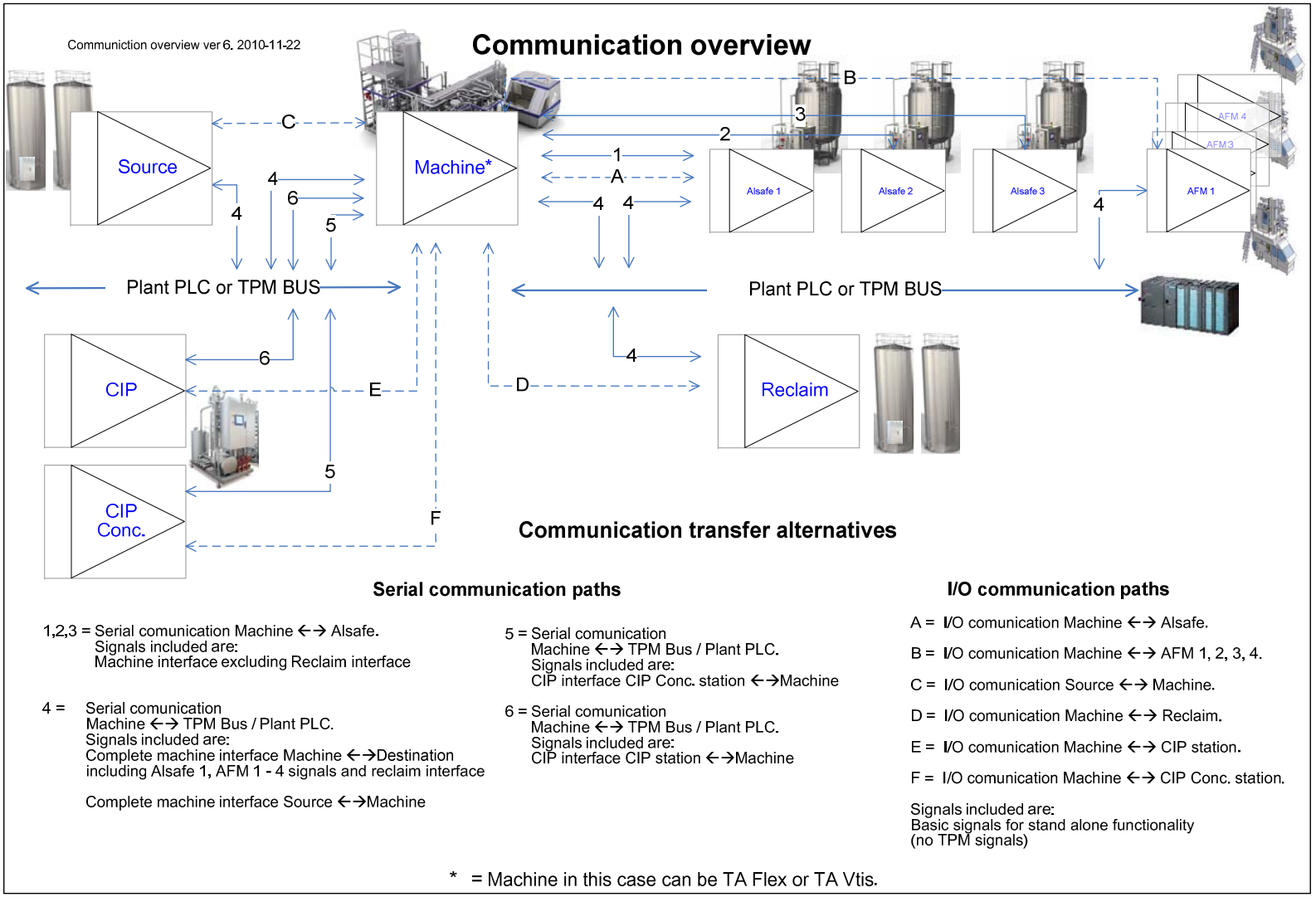

© 2009 Tetra Pak

Communication path A

IO signal list UHT

Downstream : Machine --> Destination (Alsafe)

Communication path A

	Address	Type	Description	Comments.
M>A1_WaterEn	K370	DO	Machine is in water circulation (step 17)	Steriliser is in sterile water circulation step. Allows the Tetra Alsafe to perform a sterile water rinse.
M>A1_ProdAtUnit	K375	DO	The machine has product at destination connection point.	
M>A1_Steam_Barr_Req	K380	DO	Steriliser request signal for Tetra Alsafe to turn on steam barrier at inlet valve cluster	Answer from Tetra Alsafe by signal "Steam_barr_On"
M>A1_Ster_in_CIP	K385	DO	Steriliser is in CIP, the Tetra Alsafe apply 2.7 bar steam barrier if the Alsafe is in sterile conditions.	
M>A1_Flip_V162	K390	DO	Tetra Alsafe. Flip signal for V162 when steriliser is in CIP circ. Steps.	
~~M>A1_Ster_in_Pre_Ster~~		DO	Steriliser in step 1 – 6 (sterilizing) Alsafe opens up ISB for sterilizing.	Only used in US special ISB
~~M>A1_Ster Prod~~		DO	Steriliser in step 1 - 17 or 20 – 43 (sterile but not in AIC).	Only used in US special ISB
~~M>A1_V100_Open~~		DO	Valve 100 is open from steriliser. Interlocks activation of V101A (CIP)	Only used in US version.
~~M>A1_FB_V100_FLT~~		DO	Feed back fault on V100. Interlocks V101B.	Only used in US version.
~~M>A1_FlipISB_Req~~		DO	Request for flip of valves in ISB to clean the ISB from Steriliser.	If Tetra Alsafe equipped with ISB.
~~M>A1_V100A_Open~~		DO	V100 is activated in intermediate (A) position and steriliser is in CIP. Tetra Alsafe performs flip sequence.	Only used in US version

Upstream : Machine <-- Destination (Alsafe)

Communication path A

	Address	Type	Description	
A1>M_WaterReq	**	DI	Alsafe is performing aseptic rinse	
A1>M_ProdEn	**	DI	Any destination unit is selected/connected and enabled for production. Activation condition; - Before start	Alsafe ready for filling product.
A1>M_Steam_barr_On	**	DI	Steam barrier is on, if not the Steriliser will not start sterilising timer.	
A1>M_Production_On	**	DI	Alsafe is in production steps, filling and/or emptying.	
A1>M_High_Level	**	DI	High level in Alsafe, makes the steriliser to start emptying out the product.	
~~A1>M_Alsafe_In_CIP~~	**	DI	Aseptic tank in CIP steps. Interlocks sterilising of Steriliser.	Only used in US version
~~A1>M_TSH_164_OK~~	**	DI	The TS 164 is OK. Sterilising temp for US ISB.	Only used in US version with ISB
~~A1>M_Alsafe_Pre_Ster~~	**	DI	Aseptic tank in step 101-112 Sterilising. Interlocks CIP of steriliser.	Only used in US version
~~A1>M_TSL_164_OK~~	**	DI	Steam bar. temperature TS 164 is OK for US ISB If temp low when steriliser in CIP / AIC the cleaning is finished.	Only used in US version with ISB
~~A1>M_TSL_160_OK~~	**	DI	Steam bar. temperature TS 160 is OK for US ISB. If temp low when steriliser in CIP / AIC the cleaning is finished	Only used in US version with ISB
~~A1>M_FB_101_Open~~	**	DI	Feed back from tank that V101 is activated. Condition for steriliser to open V100B.	Only used in US version
~~A1>M_Alsafe_In_CIP~~	**	DI	Alsafe in CIP. Interlock activation of V100A in steriliser.	Only used in US version
~~A1>M_FB_100B~~	**	DI	Feed back signal for V100B. Valve controlled by steriliser but feedback placed in Alsafe panel.	Only used in US version
~~A1>M_Req_Act_V100B~~	**	DI	Alsafe in sterile water rinse Open V100B.	Only used in US version

** For exact adress see EM for the relevant machine.

© 2009 Tetra Pak

Communication path B

IO signal list UHT

Communication path B

Downstream : Machine --> Destination (AFM 1 - 4)

	Address	Type	Description	Comments.
M>D_AFM_1_Start	K330	DO	OK to start AFM1	
M>D_AFM_1_Stop	K335	DO	Stop AFM 1	
M>D_AFM_2_Start	K340	DO	OK to start AFM2	
M>D_AFM_2_Stop	K345	DO	Stop AFM 2	
M>D_AFM_3_Start	K350	DO	OK to start AFM3	
M>D_AFM_3_Stop	K355	DO	Stop AFM 3	
M>D_AFM_4_Start	K360	DO	OK to start AFM4	
M>D_AFM_4_Stop	K365	DO	Stop AFM 4	

Upstream : Machine <-- Destination (AFM 1 - 4)

	Address	Type	Description	
D>M_AFM_1_ready	**	DI	AFM 1 ready for production	
D>M_AFM_1_Prod	**	DI	AFM 1 in production	
D>M_AFM_1_Barr_On	**	DI	AFM 1 steam barrier on	
D>M_AFM_2_ready	**	DI	AFM 2 ready for production	
D>M_AFM_2_Prod	**	DI	AFM 2 in production	
D>M_AFM_2_Barr_On	**	DI	AFM 2 steam barrier on	
D>M_AFM_3_ready	**	DI	AFM 3 ready for production	
D>M_AFM_3_Prod	**	DI	AFM 3 in production	
D>M_AFM_3_Barr_On	**	DI	AFM 3 steam barrier on	
D>M_AFM_4_ready	**	DI	AFM 4 ready for production	
D>M_AFM_4_Prod	**	DI	AFM 4 in production	
D>M_AFM_4_Barr_On	**	DI	AFM 4 steam barrier on	

** For exact adress see EM for the relevat machine.

© 2009 Tetra Pak

Communication path C

IO signal list UHT

Downstream : Source --> Machine

Communication path C

	Address	Type	Description	Comments.
S>M_ProdEn	**	DI	Any source unit is selected/connected and enabled for production. Activation condition; - Before start of M	Sellected and connected OK, line don't have to be filled If set low during production the machine will interupt production.
S>M_ProdAtUnit	**	DI	The selected / connected source has product avaliable at the connection point. Used in machine as step condition for start filling u	Will be high as long as there is product at connection point source. Is set low when line to connection point source has been emptied / flushed.
S>M_V15toDrain	**	DI	The supply line is bleeded to drain (only used in alt 2 and 3)	
S>M_V15toReclaim	**	DI	The supply line is bleeded to reclaim via CIP returne line (only used in alt 2 and 3)	

Upstream : Source <-- Machine

Communication path C

	Address	Type	Description	
M>S_ProdReq	K210	DO	This signal can be set when the machine is filling or producing and the ProductionEnable signal from the source is set. This signal can be set even if ProductAtUnit is not set. The selected/connected source unit is responsible to fill up the unit up to Co	Starts product pump. - If line not filled already then the line will be filled up in this request. Answer on **ProdAtUnit.**
M>S_OK_to_Act_V15	K510	DO	Possible to activate V15 from remote if stand alone installation	
M>S_TW_Req	K505	DO	Request for tower water (only for Vtis / Plus)	

** For exact adress see EM for the relevat machine.

© 2009 Tetra Pak

Communication path D

IO signal list UHT

Downstream : Machine --> Destination

Communication path D

	Address	Type	Description	Comments.
M>D_Drain_Req	K520	DO	Request for open line to drain after connection point.	
M>D_RecHP_AtUnit	K525	DO	The machine has ReclaimHP (Product/water mix) at outlet connection point for reclaim HP.	The machine has reclaim (high concentration of product) at outlet
M>D_RecLP_AtUnit	K530	DO	The machine has ReclaimLP (Product/water mix) at outlet connection point for reclaim LP.	The machine has reclaim (low concentrate of product) at outlet.

Upstream : Machine <-- Destination

	Address	Type	Description	
D>M_RecHP_En	**	DI	ReclaimHP receiver (Product/water mix) at reclaimHP connection point is prepared to receive reclaim and no valve faults in the reclaim HP line.	
D>M_RecLP_En	**	DI	ReclaimLP receiver (Product/water mix) at reclaimLP connection point is prepared to receive reclaim and no valve faults in the reclaim LP line.	
D>M_DrainEn	**	DI	Drain receiver at outlet connection point is prepared to receive water and no valve faults in destination tank line .	In case of FB fault this signal is set to 0

** For exact adress see EM for the relevat machine.

© 2009 Tetra Pak

Communication path
E & F

IO signal list UHT S7

CIP interface - Cleaning of inlet pipe Machine remote CIP system is master of the cleaning sequence

From remote CIP concentrate system

Communication path E & F

		Adress	Type	Description	Comment
CIP>M_ConcEn		**	DI	CIP concentrate system set this when it is allowed to run cleaning and no running faults exist.	

From remote CIP system

	Alcip name	Adress	Type	Description	Comment
CIP>M_CipReq	CIP REQ	**	DI	Remote system set this when it request to set the object in CIP mode	Open loop for CIP of the inlet line **or** start pressurizing Alsafe.
CIP>M_CipRun	CIP-RUN	**	DI	Used to step the CIP object from CIP preparation in to CIP run. If signal goes low and CIP object is not in prepararion and not in held the CIP object will be put in held. An alarm will be trigged. CIP can only be restarted from CIP system by set this	Used to step the Alsafe CIP from the first step (pressurising tank) to the second (rinse tank).
CIP>M_FlipOkToStart	CIP-FLIPOkToStart	**	DI	Starts the flip sequense. The CIP object starts one flip sequense when positive flank. If signal is keep high more than X minutes another flip sequense will be started.	Remote system set this when it is allowed to flip valves in the CIP object that is included in the CIP route.
CIP>M_CipEnd	CIP-END	**	DI	Finish the cleaning and set the cleaning memory in CIP object. Resets the CipObjReady -signal. The signal should stay high until CipObjReady signal = 0.	
CIP>M_CipOk	CIP-OK-x	**	DI	Alcip is OK. No alarms. Circuit unique signal, used to determine weather a global Alcip signal is valid for this CIP object. In communication with Alcip all other in signals from Alcip evaluated in combination with this signal. (Not used in new ALCIP from 2013)	If not Alcip then bridge this signal. If used set the configbit "OldALCIP" in the PLC program

To remote CIP concentrate system

		Adress	Type	Description	Comment
M>CIP_ConcLyeReq		K415	DO	The machine requests lye from the external CIP concetrate system	
M>CIP_ConcAcidReq		K420	DO	The machine requests acid from the external CIP concetrate system	

To remote CIP system

	Alcip name	Adress	Type	Description	Comment
M>CIP_CipObjEn	OBJ-EN	K425	DO	The CIP object set this when it is allowed to clean, no interlock and no running faults exist.	Information to remote CIP that it is OK to request CIP.
M>CIP_CipObjReady	OBJ-READY-x	K430	DO	Goes high when the CIP oject has finished preparations for CIP. is keept high during the whole CIP even if the CIP of the object is halted due to fault in Cip system. Signal goes low when the CIP object receives signal CipEnd signal or if the CIP is sto	
M>CIP_CipObjFlipCompleted	ExtFlipCompl.	K435	DO	This signal is set when the flip sequnse are completed and keept high until next FLIPOkStart signals comes or when the CIP is finished. (Replaces the old signal M>CIP_CipObFlipAct)	Used both for pressure less flip and flip with pressure. If old ALCIP used set the configbit "OldALCIP" in the PLC program

** For exact adress see EM for the relevat machine.

© 2009 Tetra Pak

	Communication path 1						
	Generic interface - Production related parameters						
	Downstream : Machine --> Destination (Alsafe 1)					**Communication path 1**	
		Used in branded machine	**Set by**	**Address**	**Type**	**Description**	**Comments.**
	WatchDog	Generic	(All)	DB493.DBX0.0	INT	WatchDog Counter	Signal used for enabling selection of destination.
*	Gen.PLI_Status.Spare0	Generic	(All)	DB493.DBX2.0	BOOL	Not used	PLI status for phase that is currently involved in product transfer
*	Gen.PLI_Status.Idle	Generic	(All)	DB493.DBX2.1	BOOL	The phase logic interface for production in this unit is in Idle.	PLI status for phase that is currently involved in product transfer
*	Gen.PLI_Status.Running	Generic	(All)	DB493.DBX2.2	BOOL	The phase logic interface for production in this unit is in Running.	PLI status for phase that is currently involved in product transfer
*	Gen.PLI_Status.Complete	Generic	(All)	DB493.DBX2.3	BOOL	The phase logic interface for production in this unit is in Complete.	PLI status for phase that is currently involved in product transfer
*	Gen.PLI_Held	Generic	(All)	DB493.DBX2.4	BOOL	The phase logic interface for production in this unit is in Held.	PLI status for phase that is currently involved in product transfer
*	Gen.PLI_Status.Aborted	Generic	(All)	DB493.DBX2.5	BOOL	The phase logic interface for production in this unit is in Aborted.	PLI status for phase that is currently involved in product transfer
*	Gen.PLI_Status.Stopped	Generic	(All)	DB493.DBX2.6	BOOL	The phase logic interface for production in this unit is in Stopped.	PLI status for phase that is currently involved in product transfer
*	Gen.PLI_Status.Oper	Generic	(All)	DB493.DBX3.7	BOOL	The phase logic interface for production in this unit is in running or held.	PLI status for phase that is currently involved in product transfer
	~~Gen.ProdEn~~	Generic	(All)	DB493.DBX4.0	BOOL	This unit is ready for production and no running faults exist. Machine is in a status when it is OK to select destination to machine for example not in CIP.	
	Gen.WaterEn	Generic	(All)	DB493.DBX4.1	BOOL	Steriliser is in sterile water circulation step. Allows the Tetra Alsafe to perform a sterile water rinse.	
	Gen.ProdAtUnit	Generic	(All)	DB493.DBX4.2	BOOL	The machine has product at destination connection point.	
*	Gen.FinalizeReq	Generic	(Master)	DB493.DBX4.3	BOOL	Machine requests the selected/connected destination to finalize the production in a normal way (flush/emptying), if the destination controls the water internally. Pulse this signal in x seconds. After completion the destination will be deselected.	Used to start a flush of Amount (n) in the destination inlet. Must not be set until after that the emptying of machine is done. Can only be used if there is a water valve in destination.
*	Gen.ChangeDestReq	Generic	(Master)	DB493.DBX4.4	BOOL	Set this signal to the destination when a batch change is done and the destination shall do the change over to next unit. If this machine is a slave the input ChangeDestRequest is sent to the output when this machine is filled up with the new batch.Pulse	
	Gen.ProdQueuEn	Generic	(Master)	DB493.DBX4.5	BOOL	Queued product source/destination ready	
*	Gen.AmountCounter	Generic	(All, if flowmeter)	DB493.DBD6	REAL	The counter shall count the outlet Amount from the machine independent of what is in the pipe (water/mix/product). The counter counts from 0 to 10000 and then starts from 0 again and will never be reset.	
*	Gen.AmountOffset	Generic	(Slave)	DB493.DBD10	REAL	Not used	
*	**Gen.WorkID**	Generic	(All, if unit)	DB493.DBD22	DINT	The actual WorkID in this unit. This parameter is used by the destination connection/transfer phase for logging purpuse. -When start of new batch the new / updated ID is set to output to destination directly. - When flying change of product the new / upda	
*	**Gen.MaterialID**	Generic	(All)	DB493.DBD26	DINT	Actual material identity for the material sent out from Machine to Destination when the new material has reaced connection point for destination. Can be used to check material rules. (future use)	
*	~~Gen.AllocStatus~~	Generic	(All)	DB493.DBD30	DINT	Allocation status of the unit, used to automatically allocate connections. The AllocStatus shall have the same value as actual Batch_ID for the unit.	
*	~~Gen.Estat~~	Generic	(All)	DB493.DBW42	INT	Actual Estat (equipment status) at this unit. (Filled, Emptied…) Can be used to check material separation rules.	
*	~~Gen.Cstat~~	Generic	(All)	DB493.DBW44	INT	Actual Cstat (cleanedt status) at this unit. (Cleaned, Not cleaned…) Can be used to check material separation rules.	
*	**Gen.EquipmentID**	Generic	(All)	DB493.DBW46	INT	The unique identity for the machine. This is used in the transfer phase in the connection to automatically create the PhaseID.	
*							
	Downstream : Machine --> Destination (Alsafe 1)				**Reclaim signals**		
	Recl.DrainReq	Flex / Vtis	(Master)	DB493.DBX52.0	BOOL	Request for open line to drain after connection point.	
	Recl.RecHP_AtUnit	Flex / Vtis	(Master)	DB493.DBX52.1	BOOL	The machine has ReclaimHP (Product/water mix) at outlet connection point for reclaim HP.	
	Recl.RecHP_AtUnit	Flex / Vtis	(Master)	DB493.DBX52.2	BOOL	The machine has ReclaimLP (Product/water mix) at outlet connection point for reclaim LP.	
	Downstream : Machine --> Destination (Alsafe 1)				**Machine uniqe signals**		
	ALS.SteamBarrReq	Flex / Vtis	(Master)	DB493.DBX74.0	BOOL	Steriliser request signal for Tetra Alsafe to turn on steam barrier at inlet valve cluster	Answer from Tetra Alsafe by siganl "Steam_barr_On"
	ALS.SterinCIP	Flex / Vtis	(Master)	DB493.DBX74.1	BOOL	Steriliser is in CIP, the Tetra Alsafe apply 2.7 bar steam barrier if the Alsafe is in sterile conditions.	
	ALS.SterInSW	Flex / Vtis	(Master)	DB493.DBX74.2	BOOL	Steriliser in ster water Not used	
	ALS.FlipISBReq	Flex / Vtis	(Master)	DB493.DBX74.3	BOOL	Tetra Alsafe. Flip signal for V162 when steriliser is in CIP circ. Steps.	
	ALS.ProductRelease	Flex / Vtis	(Master)	DB493.DBX74.4	BOOL	Used for OneStep	
	~~ALS.CIPFlip_Mixphase_Outlet~~	Flex / Vtis	(Master)	DB493.DBX77.2	BOOL	Not used	
	~~ALS.Mixphase_OutletReq~~	Flex / Vtis	(Master)	DB493.DBX77.3	BOOL	Not used	
	~~ALS.SterEmptyFrom0~~	Flex / Vtis	(Master)	DB493.DBX77.4	BOOL	Not used	
	~~ALS.BackPr_Req~~	Flex / Vtis	(Master)	DB493.DBX77.5	BOOL	Not used	
	~~ALS.Ster_In_Sterilising~~	Flex / Vtis	(Master)	DB493.DBX77.6	BOOL	Not used	
	~~ALS.Spare397~~	Flex / Vtis	(Master)	DB493.DBX77.7	BOOL	Not used	
	~~ALS.Stepnumber~~	Flex / Vtis	(Master)	DB493.DBD78	DINT	Not used	
	~~ALS.Agitatorspeed~~	Flex / Vtis	(Master)	DB493.DBD82	DINT	Not used	
	~~ALS.SP_TankPressure~~	Flex / Vtis	(Master)	DB493.DBD86	DINT	Not used	
	~~ALS.SP_TSL486~~	Flex / Vtis	(Master)	DB493.DBD90	DINT	Not used	
	ALS.REM_WD_CNT	Flex / Vtis		DB493.DB104		WatchDog Counter Not used	

© 2009 Tetra Pak

© 2009 Tetra Pak

Upstream : Machine <-- Destination (Alsafe 1)						**Communication path 1**	
		Used in branded machine	**Set by**	**Address**	**Type**	**Description**	
	WatchDog	Flex / Vtis		DB492.DBW0	INT	Watch Dog / Transmission counter	
	Gen.PLI_Status.Spare0	Generic	(All)	DB492.DBX2.0	BOOL	Not used	Sellected and connected OK,
*	Gen.PLI_Status.Idle	Generic	(All)	DB492.DBX2.1	BOOL		
*	Gen.PLI_Status.Running	Generic	(All)	DB492.DBX2.2	BOOL		
*	Gen.PLI_Status.Complete	Generic	(All)	DB492.DBX2.3	BOOL		
*	Gen.PLI_Status.Held	Generic	(All)	DB492.DBX2.4	BOOL		
*	Gen.PLI_Status.Aborted	Generic	(All)	DB492.DBX2.5	BOOL		
*	Gen.PLI_Status.Stopped	Generic	(All)	DB492.DBX2.6	BOOL		
*	Gen.PLI_Status.Oper	Generic	(All)	DB492.DBX3.7	BOOL		
	Gen.ProdReq	Generic	(Master)	DB492.DBX4.0	BOOL		
	Gen.WaterReq	Generic	(Master)	DB492.DBX4.1	BOOL	Alsafe is performing aseptic rinse	
	Gen.ProdEn	Generic	(All)	DB492.DBX4.2	BOOL	Any destination unit is selected/connected and enabled for production. Activation condition; - Before start	Sellected and connected OK,
*	~~Gen.FinalizeReq~~	Generic	(Master)	DB492.DBX4.3	BOOL	Not used	
*	~~Gen.ChangeSourceReq~~	Generic	(Master)	DB492.DBX4.4	BOOL	Not used	
*	~~Gen.AmountCounter~~	Generic	(All, if flowmeter)	DB492.DBD6	REAL		
*	~~Gen.AmountOffset~~	Generic	(Slave)	DB492.DBD10	REAL	This parameter contains actual Amount in the selected/connected destination unit to be emptied at the end of production. The Amount is used by the master if the destination not are supplied internally by water pressure. The emptying at the end of producti	Amount in destination tank line (h)
*	~~Gen.WorkID~~	Generic	(All, if unit)	DB492.DBD22	DINT	Not used	
*	~~Gen.MaterialID~~	Generic	(All)	DB492.DBD26	DINT		(No TPM functionality for this parameter at the moment)
*	~~Gen.AllocStatus~~	Generic	(All)	DB492.DBW30	DINT	Not used	
*	~~Gen.Estat~~	Generic	(All)	DB492.DBW42	INT	Actual Estat (equipment status) at this unit. (Filled, Emptied…) Can be used to check material separation rules.	
*	~~Gen.Cstat~~	Generic	(All)	DB492.DBW44	INT	Actual Cstat (cleanedt status) at this unit. (Cleaned, Not cleaned…) Can be used to check material separation rules.	
*	~~Gen.EquipmentID~~	Generic	(All)	DB492.DBW46	INT	Not used	
*							
Upstream : Machine <-- Destination (Alsafe 1)						**Reclaim signals**	
	Recl.RecHP_En	Flex / Vtis	(Slave)	DB492.DBX52.0	BOOL	ReclaimHP receiver (Product/water mix) at reclaimHP connection point is prepared to receive reclaim and no valve faults in the recl HP line.	
	Recl.RecLP_En	Flex / Vtis	(Slave)	DB492.DBX52.1	BOOL	ReclaimLP receiver (Product/water mix) at reclaimLP connection point is prepared to receive reclaim and no valve faults in the recl LP line.	
	Recl.DrainEn	Flex / Vtis	(Slave)	DB492.DBX52.2	BOOL	Drain receiver at outlet connection point is prepared to receive water and no valve faults in destination tank line .	
Upstream : Machine <-- Destination (Alsafe 1)						**Machine uniqe signals**	
	ALS.SteambarrOn	Flex / Vtis	(Slave)	DB492.DBX74.0	BOOL	Steam barrier is on, if not the Steriliser will not start sterilising timer.	
	ALS.ProductionOn	Flex / Vtis	(Slave)	DB492.DBX74.1	BOOL	Alsafe is in production steps, filling and/or emptying.	
	ALS.HighLevel	Flex / Vtis	(Slave)	DB492.DBX74.2	BOOL	High level in Alsafe, makes the steriliser to start emptying out the product.	
	ALS.MediumLevel	Flex / Vtis	(Slave)	DB492.DBX74.3	BOOL	Medium level in Alsafe, Used for OneStep	
		Flex / Vtis	(Slave)		BOOL		Only used in US version with ISB
	~~ALS.AlsafeOK~~	Flex / Vtis	(Slave)	DB492.DBX76.5	BOOL		Only used in US version
	~~ALS.TSL485OK~~	Flex / Vtis	(Slave)	DB492.DBX76.6	BOOL		Only used in US version with ISB
	~~ALS.ReadyForCIP~~	Flex / Vtis	(Slave)	DB492.DBX76.7	BOOL		Only used in US version with ISB
		Flex / Vtis	(Slave)		BOOL		Only used in US version
		Flex / Vtis	(Slave)		BOOL		Only used in US version
		Flex / Vtis	(Slave)		BOOL		Only used in US version
		Flex / Vtis	(Slave)		BOOL		Only used in US version
	~~REM_WD_CNT~~	Flex / Vtis		DB492.DBW104	INT	Watch Dog / Transmission counter Not Used	
	Notes						
*	= optional functionailty (also covered by Tetra PlantMaster)						
	Each stream in or out from the machine will have interface described above. E.g. two streams out from a machine (Cream and milk out from a pasteuriser) will give the double set of signals.						
	The generic interface signals described above is the base set of signals to transfer product in the plant.						
	The additional module signals (Flex, Vtis, Lacta, Drink) are used to add module unique functionality that is not covered by the base set.						

© 2009 Tetra Pak

	Communication path 2						
Generic interface - Production related parameters							
Downstream : Machine --> Destination (Alsafe 2)						**Communication path 2**	
		Used in branded machine	**Set by**	**Address**	**Type**	**Description**	**Comments.**
	WatchDog	Generic	(All)	DB495.DBX0.0	INT	WatchDog Counter	Signal used for enabling selection of destination.
*	Gen.PLI_Status.Spare0	Generic	(All)	DB495.DBX2.0	BOOL	Not used	PLI status for phase that is currently involved in product transfer
*	Gen.PLI_Status.Idle	Generic	(All)	DB495.DBX2.1	BOOL	The phase logic interface for production in this unit is in Idle.	PLI status for phase that is currently involved in product transfer
*	Gen.PLI_Status.Running	Generic	(All)	DB495.DBX2.2	BOOL	The phase logic interface for production in this unit is in Running.	PLI status for phase that is currently involved in product transfer
*	Gen.PLI_Status.Complete	Generic	(All)	DB495.DBX2.3	BOOL	The phase logic interface for production in this unit is in Complete.	PLI status for phase that is currently involved in product transfer
*	Gen.PLI_Held	Generic	(All)	DB495.DBX2.4	BOOL	The phase logic interface for production in this unit is in Held.	PLI status for phase that is currently involved in product transfer
*	Gen.PLI_Status.Aborted	Generic	(All)	DB495.DBX2.5	BOOL	The phase logic interface for production in this unit is in Aborted.	PLI status for phase that is currently involved in product transfer
*	Gen.PLI_Status.Stopped	Generic	(All)	DB495.DBX2.6	BOOL	The phase logic interface for production in this unit is in Stopped.	PLI status for phase that is currently involved in product transfer
*	Gen.PLI_Status.Oper	Generic	(All)	DB495.DBX3.7	BOOL	The phase logic interface for production in this unit is in running or held.	PLI status for phase that is currently involved in product transfer
	~~Gen.ProdEn~~	Generic	(All)	DB495.DBX4.0	BOOL	This unit is ready for production and no running faults exist. Machine is in a status when it is OK to select destination to machine for example not in CIP.	
	Gen.WaterEn	Generic	(All)	DB495.DBX4.1	BOOL	Steriliser is in sterile water circulation step. Allows the Tetra Alsafe to perform a sterile water rinse.	
	Gen.ProdAtUnit	Generic	(All)	DB495.DBX4.2	BOOL	The machine has product at destination connection point.	
*	Gen.FinalizeReq	Generic	(Master)	DB495.DBX4.3	BOOL	Machine requests the selected/connected destination to finalize the production in a normal way (flush/emptying), if the destination controls the valves internally. Pulse this signal in x seconds. After completion the destination will be deselected.	Used to start a flush of Amount (n) in the destination inlet. Must not be set until after that the emptying of machine is done. Can only be used if there is a water valve in destination.
*	Gen.ChangeDestReq	Generic	(Master)	DB495.DBX4.4	BOOL	Set this signal to the destination when a batch change is done and the destination shall do the change over to next unit. If this machine is a slave the input ChangeDestRequest is sent to the output when this machine is filled up with the new batch.Pulse	
	Gen.ProdQueuEn	Generic	(Master)	DB495.DBX4.5	BOOL	Queued product source/destination ready	
*	Gen.AmountCounter	Generic	(All, if flowmeter)	DB495.DBD6	REAL	The counter shall count the outlet Amount from the machine independent of what is in the pipe (water/mix/product). The counter counts from 0 to 10000 and then starts from 0 again and will never be reset.	
*	Gen.AmountOffset	Generic	(Slave)	DB495.DBD10	REAL	Not used	
*	**Gen.WorkID**	Generic	(All, if unit)	DB495.DBD22	DINT	The actual WorkID in this unit. This parameter is used by the destination connection/transfer phase for logging purpuse. -When start of new batch the new / updated ID is set to output to destination directly. - When flying change of product the new / upda	
*	**Gen.MaterialID**	Generic	(All)	DB495.DBD26	DINT	Actual material identity for the material sent out from Machine to Destination when the new material has reaced connection point for destination. Can be used to check material rules. (future use)	
*	~~Gen.AllocStatus~~	Generic	(All)	DB495.DBD30	DINT	Allocation status of the unit, used to automatically allocate connections. The AllocStatus shall have the same value as actual Batch_ID for the unit.	
*	~~Gen.Estat~~	Generic	(All)	DB495.DBW42	INT	Actual Estat (equipment status) at this unit. (Filled, Emptied…) Can be used to check material separation rules.	
*	~~Gen.Cstat~~	Generic	(All)	DB495.DBW44	INT	Actual Cstat (cleanedt status) at this unit. (Cleaned, Not cleaned…) Can be used to check material separation rules.	
*	**Gen.EquipmentID**	Generic	(All)	DB495.DBW46	INT	The unique identity for the machine. This is used in the transfer phase in the connection to automatically create the PhaseID.	
*							
Downstream : Machine --> Destination (Alsafe 2)					**Reclaim signals**		
	Recl.DrainReq	Flex / Vtis	(Master)	DB495.DBX52.0	BOOL	Request for open line to drain after connection point.	
	Recl.RecHP_AtUnit	Flex / Vtis	(Master)	DB495.DBX52.1	BOOL	The machine has ReclaimHP (Product/water mix) at outlet connection point for reclaim HP.	
	Recl.RecHP_AtUnit	Flex / Vtis	(Master)	DB495.DBX52.2	BOOL	The machine has ReclaimLP (Product/water mix) at outlet connection point for reclaim LP.	
Downstream : Machine --> Destination (Alsafe 2)					**Machine unige signals**		
	ALS.SteamBarrReq	Flex / Vtis	(Master)	DB495.DBX74.0	BOOL	Steriliser request signal for Tetra Alsafe to turn on steam barrier at inlet valve cluster	Answer from Tetra Alsafe by siganl "Steam_barr_On"
	ALS.SterinCIP	Flex / Vtis	(Master)	DB495.DBX74.1	BOOL	Steriliser is in CIP, the Tetra Alsafe apply 2.7 bar steam barrier if the Alsafe is in sterile conditions.	
	ALS.SterInSW	Flex / Vtis	(Master)	DB495.DBX74.2	BOOL	Steriliser in ster water Not used	
	ALS.FlipISBReq	Flex / Vtis	(Master)	DB495.DBX74.3	BOOL	Tetra Alsafe. Flip signal for V162 when steriliser is in CIP circ. Steps.	
	ALS.ProductRelease	Flex / Vtis	(Master)	DB495.DBX74.4	BOOL	Used for OneStep	
	~~ALS.CIPFlip_Mixphase_Outlet~~	Flex / Vtis	(Master)	DB495.DBX77.2	BOOL	Not used	
	~~ALS.Mixphase_OutletReq~~	Flex / Vtis	(Master)	DB495.DBX77.3	BOOL	Not used	
	~~ALS.SterEmptyFrom0~~	Flex / Vtis	(Master)	DB495.DBX77.4	BOOL	Not used	
	~~ALS.BackPr_Req~~	Flex / Vtis	(Master)	DB495.DBX77.5	BOOL	Not used	
	~~ALS.Ster_In_Sterilising~~	Flex / Vtis	(Master)	DB495.DBX77.6	BOOL	Not used	
	~~ALS.Spare397~~	Flex / Vtis	(Master)	DB495.DBX77.7	BOOL	Not used	
	~~ALS.Stepnumber~~	Flex / Vtis	(Master)	DB495.DBD78	DINT	Not used	
	~~ALS.Agitatorspeed~~	Flex / Vtis	(Master)	DB495.DBD82	DINT	Not used	

© 2009 Tetra Pak

	~~ALS.SP_TankPressure~~	Flex / Vtis	(Master)	DB495.DBD86	DINT	Not used	
	~~ALS.SP_TSL486~~	Flex / Vtis	(Master)	DB495.DBD90	DINT	Not used	
	ALS.REM_WD_CNT	Flex / Vtis		DB495.DB104		WatchDog Counter Not used	

© 2009 Tetra Pak

Upstream : Machine <-- Destination (Alsafe 2)						**Communication path 2**	
		Used in branded machine	**Set by**	**Address**	**Type**	**Description**	
	WatchDog	Flex / Vtis		DB494.DBW0	INT	Watch Dog / Transmission counter	
	Gen.PLI_Status.Spare0	Generic	(All)	DB494.DBX2.0	BOOL	Not used	Sellected and connected OK,
*	Gen.PLI_Status.Idle	Generic	(All)	DB494.DBX2.1	BOOL		
*	Gen.PLI_Status.Running	Generic	(All)	DB494.DBX2.2	BOOL		
*	Gen.PLI_Status.Complete	Generic	(All)	DB494.DBX2.3	BOOL		
*	Gen.PLI_Status.Held	Generic	(All)	DB494.DBX2.4	BOOL		
*	Gen.PLI_Status.Aborted	Generic	(All)	DB494.DBX2.5	BOOL		
*	Gen.PLI_Status.Stopped	Generic	(All)	DB494.DBX2.6	BOOL		
*	Gen.PLI_Status.Oper	Generic	(All)	DB494.DBX3.7	BOOL		
	Gen.ProdReq	Generic	(Master)	DB494.DBX4.0	BOOL		
	Gen.WaterReq	Generic	(Master)	DB494.DBX4.1	BOOL	Alsafe is performing aseptic rinse	
	Gen.ProdEn	Generic	(All)	DB494.DBX4.2	BOOL	Any destination unit is selected/connected and enabled for production. Activation condition; - Before start	Sellected and connected OK,
*	~~Gen.FinalizeReq~~	Generic	(Master)	DB494.DBX4.3	BOOL	Not used	
*	~~Gen.ChangeSourceReq~~	Generic	(Master)	DB494.DBX4.4	BOOL	Not used	
*	~~Gen.AmountCounter~~	Generic	(All, if flowmeter)	DB494.DBD6	REAL		
*	~~Gen.AmountOffset~~	Generic	(Slave)	DB494.DBD10	REAL	This parameter contains actual Amount in the selected/connected destination unit to be emptied at the end of production. The Amount is used by master if the destination not are supplied internally by water pressure. The emptying at the end of producti	Amount in destination tank line (h)
*	~~Gen.WorkID~~	Generic	(All, if unit)	DB494.DBD22	DINT	Not used	
*	~~Gen.MaterialID~~	Generic	(All)	DB494.DBD26	DINT		(No TPM functionality for this parameter at the moment)
*	~~Gen.AllocStatus~~	Generic	(All)	DB494.DBW30	DINT	Not used	
*	~~Gen.Estat~~	Generic	(All)	DB494.DBW42	INT	Actual Estat (equipment status) at this unit. (Filled, Emptied…) Can be used to check material separation rules.	
*	~~Gen.Cstat~~	Generic	(All)	DB494.DBW44	INT	Actual Cstat (cleanedt status) at this unit. (Cleaned, Not cleaned…) Can be used to check material separation rules.	
*	~~Gen.EquipmentID~~	Generic	(All)	DB494.DBW46	INT	Not used	
*							
Upstream : Machine <-- Destination (Alsafe 2)					**Reclaim signals**		
	Recl.RecHP_En	Flex / Vtis	(Slave)	DB494.DBX52.0	BOOL	ReclaimHP receiver (Product/water mix) at reclaimHP connection point is prepared to receive reclaim and no valve faults in the recl HP line.	
	Recl.RecLP_En	Flex / Vtis	(Slave)	DB494.DBX52.1	BOOL	ReclaimLP receiver (Product/water mix) at reclaimLP connection point is prepared to receive reclaim and no valve faults in the recl LP line.	
	Recl.DrainEn	Flex / Vtis	(Slave)	DB494.DBX52.2	BOOL	Drain receiver at outlet connection point is prepared to receive water and no valve faults in destination tank line .	
Upstream : Machine <-- Destination (Alsafe 2)					**Machine unige signals**		
	ALS.SteambarrOn	Flex / Vtis	(Slave)	DB494.DBX74.0	BOOL	Steam barrier is on, if not the Steriliser will not start sterilising timer.	
	ALS.ProductionOn	Flex / Vtis	(Slave)	DB494.DBX74.1	BOOL	Alsafe is in production steps, filling and/or emptying.	
	ALS.HighLevel	Flex / Vtis	(Slave)	DB494.DBX74.2	BOOL	High level in Alsafe, makes the steriliser to start emptying out the product.	
	ALS.MediumLevel	Flex / Vtis	(Slave)	DB494.DBX74.3	BOOL	Medium level in Alsafe, Used for OneStep	
		Flex / Vtis	(Slave)		BOOL		Only used in US version with ISB
	~~ALS.AlsafeOK~~	Flex / Vtis	(Slave)	DB494.DBX76.5	BOOL		Only used in US version
	~~ALS.TSL485OK~~	Flex / Vtis	(Slave)	DB494.DBX76.6	BOOL		Only used in US version with ISB
	~~ALS.ReadyForCIP~~	Flex / Vtis	(Slave)	DB494.DBX76.7	BOOL		Only used in US version with ISB
		Flex / Vtis	(Slave)		BOOL		Only used in US version
		Flex / Vtis	(Slave)		BOOL		Only used in US version
		Flex / Vtis	(Slave)		BOOL		Only used in US version
		Flex / Vtis	(Slave)		BOOL		Only used in US version
	~~REM_WD_CNT~~	Flex / Vtis		DB494.DBW104	INT	Watch Dog / Transmission counter Not Used	
	Notes						
*	= optional functionailty (also covered by Tetra PlantMaster)						
	Each stream in or out from the machine will have interface described above. E.g. two streams out from a machine (Cream and milk out from a pasteuriser) will give the double set of signals.						
	The generic interface signals described above is the base set of signals to transfer product in the plant.						
	The additional module signals (Flex, Vtis, Lacta, Drink) are used to add module unique functionality that is not covered by the base set.						

© 2009 Tetra Pak

	Communication path 3						
Generic interface - Production related parameters							
Downstream : Machine --> Destination (Alsafe 3)						**Communication path 3**	
		Used in branded machine	**Set by**	**Address**	**Type**	**Description**	**Comments.**
	WatchDog	Generic	(All)	Db497.DBX0.0	INT	WatchDog Counter	Signal used for enabling selection of destination.
*	Gen.PLI_Status.Spare0	Generic	(All)	Db497.DBX2.0	BOOL	Not used	PLI status for phase that is currently involved in product transfer
*	Gen.PLI_Status.Idle	Generic	(All)	Db497.DBX2.1	BOOL	The phase logic interface for production in this unit is in Idle.	PLI status for phase that is currently involved in product transfer
*	Gen.PLI_Status.Running	Generic	(All)	Db497.DBX2.2	BOOL	The phase logic interface for production in this unit is in Running.	PLI status for phase that is currently involved in product transfer
*	Gen.PLI_Status.Complete	Generic	(All)	Db497.DBX2.3	BOOL	The phase logic interface for production in this unit is in Complete.	PLI status for phase that is currently involved in product transfer
*	Gen.PLI_Held	Generic	(All)	Db497.DBX2.4	BOOL	The phase logic interface for production in this unit is in Held.	PLI status for phase that is currently involved in product transfer
*	Gen.PLI_Status.Aborted	Generic	(All)	Db497.DBX2.5	BOOL	The phase logic interface for production in this unit is in Aborted.	PLI status for phase that is currently involved in product transfer
*	Gen.PLI_Status.Stopped	Generic	(All)	Db497.DBX2.6	BOOL	The phase logic interface for production in this unit is in Stopped.	PLI status for phase that is currently involved in product transfer
*	Gen.PLI_Status.Oper	Generic	(All)	Db497.DBX3.7	BOOL	The phase logic interface for production in this unit is in running or held.	PLI status for phase that is currently involved in product transfer
	~~Gen.ProdEn~~	Generic	(All)	Db497.DBX4.0	BOOL	This unit is ready for production and no running faults exist. Machine is in a status when it is OK to select destination to machine for example not in CIP.	
	Gen.WaterEn	Generic	(All)	Db497.DBX4.1	BOOL	Steriliser is in sterile water circulation step. Allows the Tetra Alsafe to perform a sterile water rinse.	
	Gen.ProdAtUnit	Generic	(All)	Db497.DBX4.2	BOOL	The machine has product at destination connection point.	
*	Gen.FinalizeReq	Generic	(Master)	Db497.DBX4.3	BOOL	Machine requests the selected/connected destination to finalize the production in a normal way (flush/emptying), if the destination controls the water internally. Pulse this signal in x seconds. After completion the destination will be deselected.	Used to start a flush of Amount (n) in the destination inlet. Must not be set until after that the emptying of machine is done. Can only be used if there is a water valve in destination.
*	Gen.ChangeDestReq	Generic	(Master)	Db497.DBX4.4	BOOL	Set this signal to the destination when a batch change is done and the destination shall do the change over to next unit. If this machine is a slave the input ChangeDestRequest is sent to the output when this machine is filled up with the new batch.Pulse	
	Gen.ProdQueuEn	Generic	(Master)	Db497.DBX4.5	BOOL	Queued product source/destination ready	
*	Gen.AmountCounter	Generic	(All, if flowmeter)	Db497.DBD6	REAL	The counter shall count the outlet Amount from the machine independent of what is in the pipe (water/mix/product). The counter counts from 0 to 10000 and then starts from 0 again and will never be reset.	
*	Gen.AmountOffset	Generic	(Slave)	Db497.DBD10	REAL	Not used	
*	**Gen.WorkID**	Generic	(All, if unit)	Db497.DBD22	DINT	The actual WorkID in this unit. This parameter is used by the destination connection/transfer phase for logging purpuse. -When start of new batch the new / updated ID is set to output to destination directly. - When flying change of product the new / upda	
*	**Gen.MaterialID**	Generic	(All)	Db497.DBD26	DINT	Actual material identity for the material sent out from Machine to Destination when the new material has reaced connection point for destination. Can be used to check material rules. (future use)	
*	~~Gen.AllocStatus~~	Generic	(All)	Db497.DBD30	DINT	Allocation status of the unit, used to automatically allocate connections. The AllocStatus shall have the same value as actual Batch_ID for the unit.	
*	~~Gen.Estat~~	Generic	(All)	Db497.DBW42	INT	Actual Estat (equipment status) at this unit. (Filled, Emptied…) Can be used to check material separation rules.	
*	~~Gen.Cstat~~	Generic	(All)	Db497.DBW44	INT	Actual Cstat (cleanedt status) at this unit. (Cleaned, Not cleaned…) Can be used to check material separation rules.	
*	**Gen.EquipmentID**	Generic	(All)	Db497.DBW46	INT	The unique identity for the machine. This is used in the transfer phase in the connection to automatically create the PhaseID.	
*							
Downstream : Machine --> Destination (Alsafe 3)					**Reclaim signals**		
	Recl.DrainReq	Flex / Vtis	(Master)	Db497.DBX52.0	BOOL	Request for open line to drain after connection point.	
	Recl.RecHP_AtUnit	Flex / Vtis	(Master)	Db497.DBX52.1	BOOL	The machine has ReclaimHP (Product/water mix) at outlet connection point for reclaim HP.	
	Recl.RecHP_AtUnit	Flex / Vtis	(Master)	Db497.DBX52.2	BOOL	The machine has ReclaimLP (Product/water mix) at outlet connection point for reclaim LP.	
Downstream : Machine --> Destination (Alsafe 3)					**Machine unige signals**		
	ALS.SteamBarrReq	Flex / Vtis	(Master)	Db497.DBX74.0	BOOL	Steriliser request signal for Tetra Alsafe to turn on steam barrier at inlet valve cluster	Answer from Tetra Alsafe by siganl "Steam_barr_On"
	ALS.SterinCIP	Flex / Vtis	(Master)	Db497.DBX74.1	BOOL	Steriliser is in CIP, the Tetra Alsafe apply 2.7 bar steam barrier if the Alsafe is in sterile conditions.	
	ALS.SterInSW	Flex / Vtis	(Master)	Db497.DBX74.2	BOOL	Steriliser in ster water Not used	
	ALS.FlipISBReq	Flex / Vtis	(Master)	Db497.DBX74.3	BOOL	Tetra Alsafe. Flip signal for V162 when steriliser is in CIP circ. Steps.	
	ALS.ProductRelease	Flex / Vtis	(Master)	Db497.DBX74.4	BOOL	Used for OneStep	
	~~ALS.CIPFlip_Mixphase_Outlet~~	Flex / Vtis	(Master)	Db497.DBX77.2	BOOL	Not used	
	~~ALS.Mixphase_OutletReq~~	Flex / Vtis	(Master)	Db497.DBX77.3	BOOL	Not used	
	~~ALS.SterEmptyFrom0~~	Flex / Vtis	(Master)	Db497.DBX77.4	BOOL	Not used	
	~~ALS.BackPr_Req~~	Flex / Vtis	(Master)	Db497.DBX77.5	BOOL	Not used	
	~~ALS.Ster_In_Sterilising~~	Flex / Vtis	(Master)	Db497.DBX77.6	BOOL	Not used	
	~~ALS.Spare397~~	Flex / Vtis	(Master)	Db497.DBX77.7	BOOL	Not used	
	~~ALS.Stepnumber~~	Flex / Vtis	(Master)	Db497.DBD78	DINT	Not used	
	~~ALS.Agitatorspeed~~	Flex / Vtis	(Master)	Db497.DBD82	DINT	Not used	

© 2009 Tetra Pak

	~~ALS.SP_TankPressure~~	Flex / Vtis	(Master)	Db497.DBD86	DINT	Not used	
	~~ALS.SP_TSL486~~	Flex / Vtis	(Master)	Db497.DBD90	DINT	Not used	
	ALS.REM_WD_CNT	Flex / Vtis		Db497.DB104		WatchDog Counter Not used	

© 2009 Tetra Pak

Upstream : Machine <-- Destination (Alsafe 3)						**Communication path 3**	
		Used in branded machine	**Set by**	**Address**	**Type**	**Description**	
	WatchDog	Flex / Vtis		Db496.DBW0	INT	Watch Dog / Transmission counter	
	Gen.PLI_Status.Spare0	Generic	(All)	Db496.DBX2.0	BOOL	Not used	Sellected and connected OK,
*	Gen.PLI_Status.Idle	Generic	(All)	Db496.DBX2.1	BOOL		
*	Gen.PLI_Status.Running	Generic	(All)	Db496.DBX2.2	BOOL		
*	Gen.PLI_Status.Complete	Generic	(All)	Db496.DBX2.3	BOOL		
*	Gen.PLI_Status.Held	Generic	(All)	Db496.DBX2.4	BOOL		
*	Gen.PLI_Status.Aborted	Generic	(All)	Db496.DBX2.5	BOOL		
*	Gen.PLI_Status.Stopped	Generic	(All)	Db496.DBX2.6	BOOL		
*	Gen.PLI_Status.Oper	Generic	(All)	Db496.DBX3.7	BOOL		
	Gen.ProdReq	Generic	(Master)	Db496.DBX4.0	BOOL		
	Gen.WaterReq	Generic	(Master)	Db496.DBX4.1	BOOL	Alsafe is performing aseptic rinse	
	Gen.ProdEn	Generic	(All)	Db496.DBX4.2	BOOL	Any destination unit is selected/connected and enabled for production. Activation condition; - Before start	Sellected and connected OK,
*	~~Gen.FinalizeReq~~	Generic	(Master)	Db496.DBX4.3	BOOL	Not used	
*	~~Gen.ChangeSourceReq~~	Generic	(Master)	Db496.DBX4.4	BOOL	Not used	
*	~~Gen.AmountCounter~~	Generic	(All, if flowmeter)	Db496.DBD6	REAL		
*	~~Gen.AmountOffset~~	Generic	(Slave)	Db496.DBD10	REAL	This parameter contains actual Amount in the selected/connected destination unit to be emptied at the end of production. The Amount is used by master if the destination not are supplied internally by water pressure. The emptying at the end of producti	Amount in destination tank line (h)
*	~~Gen.WorkID~~	Generic	(All, if unit)	Db496.DBD22	DINT	Not used	
*	~~Gen.MaterialID~~	Generic	(All)	Db496.DBD26	DINT		(No TPM functionality for this parameter at the moment)
*	~~Gen.AllocStatus~~	Generic	(All)	Db496.DBW30	DINT	Not used	
*	~~Gen.Estat~~	Generic	(All)	Db496.DBW42	INT	Actual Estat (equipment status) at this unit. (Filled, Emptied…) Can be used to check material separation rules.	
*	~~Gen.Cstat~~	Generic	(All)	Db496.DBW44	INT	Actual Cstat (cleanedt status) at this unit. (Cleaned, Not cleaned…) Can be used to check material separation rules.	
*	~~Gen.EquipmentID~~	Generic	(All)	Db496.DBW46	INT	Not used	
*							
Upstream : Machine <-- Destination (Alsafe 3)					**Reclaim signals**		
	Recl.RecHP_En	Flex / Vtis	(Slave)	Db496.DBX52.0	BOOL	ReclaimHP receiver (Product/water mix) at reclaimHP connection point is prepared to receive reclaim and no valve faults in the recl HP line.	
	Recl.RecLP_En	Flex / Vtis	(Slave)	Db496.DBX52.1	BOOL	ReclaimLP receiver (Product/water mix) at reclaimLP connection point is prepared to receive reclaim and no valve faults in the recl LP line.	
	Recl.DrainEn	Flex / Vtis	(Slave)	Db496.DBX52.2	BOOL	Drain receiver at outlet connection point is prepared to receive water and no valve faults in destination tank line .	
Upstream : Machine <-- Destination (Alsafe 3)					**Machine unige signals**		
	ALS.SteambarrOn	Flex / Vtis	(Slave)	Db496.DBX74.0	BOOL	Steam barrier is on, if not the Steriliser will not start sterilising timer.	
	ALS.ProductionOn	Flex / Vtis	(Slave)	Db496.DBX74.1	BOOL	Alsafe is in production steps, filling and/or emptying.	
	ALS.HighLevel	Flex / Vtis	(Slave)	Db496.DBX74.2	BOOL	High level in Alsafe, makes the steriliser to start emptying out the product.	
	ALS.MediumLevel	Flex / Vtis	(Slave)	Db496.DBX74.3	BOOL	Medium level in Alsafe, Used for OneStep	
		Flex / Vtis	(Slave)		BOOL		Only used in US version with ISB
	~~ALS.AlsafeOK~~	Flex / Vtis	(Slave)	Db496.DBX76.5	BOOL		Only used in US version
	~~ALS.TSL485OK~~	Flex / Vtis	(Slave)	Db496.DBX76.6	BOOL		Only used in US version with ISB
	~~ALS.ReadyForCIP~~	Flex / Vtis	(Slave)	Db496.DBX76.7	BOOL		Only used in US version with ISB
		Flex / Vtis	(Slave)		BOOL		Only used in US version
		Flex / Vtis	(Slave)		BOOL		Only used in US version
		Flex / Vtis	(Slave)		BOOL		Only used in US version
		Flex / Vtis	(Slave)		BOOL		Only used in US version
	~~REM_WD_CNT~~	Flex / Vtis		Db496.DBW104	INT	Watch Dog / Transmission counter Not Used	
	Notes						
*	= optional functionailty (also covered by Tetra PlantMaster)						
	Each stream in or out from the machine will have interface described above. E.g. two streams out from a machine (Cream and milk out from a pasteuriser) will give the double set of signals.						
	The generic interface signals described above is the base set of signals to transfer product in the plant.						
	The additional module signals (Flex, Vtis, Lacta, Drink) are used to add module unique functionality that is not covered by the base set.						

© 2009 Tetra Pak

Communication path 4

Generic interface - Production related parameters

Downstream : Source --> Machine

Communication path 4

		Used in branded machine	Set by	Address	Type	Description	Comments.
	S_M.WatchDog	Flex / Vtis		DB498.DBW0	INT	Watch Dog / Transmission counter	
	~~S_M.Gen.PLI_Status.Spare0~~	Generic	(All)	DB498.DBX2.0	BOOL	Not used	
*	~~S_M.Gen.PLI_Status.Idle~~	Generic	(All)	DB498.DBX2.1	BOOL	Not used	
*	~~S_M.Gen.PLI_Status.Running~~	Generic	(All)	DB498.DBX2.2	BOOL	Not used	
*	~~S_M.Gen.PLI_Status.Complete~~	Generic	(All)	DB498.DBX2.3	BOOL	Not used	
*	~~S_M.Gen.PLI_Status.Held~~	Generic	(All)	DB498.DBX2.4	BOOL	Not used	
*	~~S_M.Gen.PLI_Status.Aborted~~	Generic	(All)	DB498.DBX2.5	BOOL	Not used	
*	~~S_M.Gen.PLI_Status.Stopped~~	Generic	(All)	DB498.DBX2.6	BOOL	Not used	
*	~~S_M.Gen.PLI_Status.Oper~~	Generic	(All)	DB498.DBX3.7	BOOL	Not used	
*	S_M.Gen.ProdEn	Generic	(Slave)	DB498.DBX4.0	BOOL	Any source unit is selected/connected and enabled for production. Activation condition; - Before start of Machine, No interlock in Source - After start of Machine, No RF in Source	Sellected and connected OK, line don't have to be filled If set low during production the machine will interupt production.
	S_M.Gen.WaterEn	Generic	(All)	DB498.DBX4.1	BOOL	Water pressure for flush of supply line OK - No valve faults and no valves in manual mode in source tank line	
	S_M.Gen.ProdAtUnit	Generic	(All)	DB498.DBX4.2	BOOL	The selected / connected source has product avaliable at the connection point. Used in machine as step condition for start filling up with product.	Will be high as long as there is product at connection point source. Is set low when line to connection point source has been emptied / flushed, initiated from Machine by M>S_FinalizeReq.
*	~~S_M.Gen.FinalizeReq~~	Generic	(Master)	DB498.DBX4.3	BOOL	If this unit is a slave the master can set this signal to initiate finalize of the production in a normal way (flush/empting). Function as a parallel command to the OP command Finalize (normally not used).	
*	~~S_M.Gen.ChangeDestReq~~	Generic	(Master)	DB498.DBX4.4	BOOL	Not used	
*	~~S_M.Gen.ProdQueEn~~	Generic	(All)	DB498.DBX4.5	BOOL	Sources in queue for next batch > 0	There is source tank in queue for the next batch.
*	~~S_M.Gen.AmountCounter~~	Generic	(All, if flowmeter)	DB498.DBD6	REAL	Not used	
*	S_M.Gen.AmountOffset	Generic	(Slave)	DB498.DBD10	REAL	This parameter contains actual Amount in the selected/connected Source (s) to be emptied at the end of production (Amount g or f+i). The Amount used by the Machine to initiate an automatic emptying at the end of a target based production at correct moment or to change source at correct moment at batch change (if source shall change). If the source can't flush (no water supply exist) the AmountOffset parameter is set to zero.	
*	~~S_M.Gen.WorkID~~	Generic	(All, if unit)	DB498.DBD22	DINT	Not used	
*	S_M.Gen.MaterialID	Generic	(All)	DB498.DBD26	DINT	Actual material identity for the material sent to Machine from Source. Can be used to check material rules. (future use)	
*	~~S_M.Gen.AllocStatus~~	Generic	(All)	DB498.DBD30	DINT	Not used	
*	~~S_M.Gen.Estat~~	Generic	(All)	DB498.DBW42	INT	Actual Estat (equipment status) at this unit. (Filled, Emptied…) Can be used to check material separation rules.	
*	~~S_M.Gen.Cstat~~	Generic	(All)	DB498.DBW44	INT	Actual Cstat (cleanedt status) at this unit. (Cleaned, Not cleaned…) Can be used to check material separation rules.	
*	~~S_M.Gen.EquipmentID~~	Generic	(All)	DB498.DBW46	INT	Not used	

Downstream : Source --> Machine **Machine uniqe signals**

S_M.Spec.V15toDrain	Flex / Vtis	(Slave)	DB498.DBX52.0	BOOL	The supply line is bleeded to drain (only used in alt 2 and 3)	
S_M.Spec.V15toReclaim	Flex / Vtis	(Slave)	DB498.DBX52.1	BOOL	The supply line is bleeded to reclaim via CIP returne line (only used in alt 2 and 3)	

© 2009 Tetra Pak

Upstream : Source <-- Machine

Communication path 4

		Used in branded machine	Set by	Address	Type	Description	
	M_S.WatchDog	Flex/Vtis		DB499.DBW0	INT	WatchDog Counter	
*	M_S.Gen.PLI_Status.Idle	Generic	(All)	DB499.DBX2.1	BOOL	The phase logic interface for production in this unit is in Idle.	PLI status for phase that is currently involved in product transfer
*	M_S.Gen.PLI_Status.Running	Generic	(All)	DB499.DBX2.2	BOOL	The phase logic interface for production in this unit is in Running.	PLI status for phase that is currently involved in product transfer
*	M_S.Gen.PLI_Status.Complete	Generic	(All)	DB499.DBX2.3	BOOL	The phase logic interface for production in this unit is in Complete.	PLI status for phase that is currently involved in product transfer
*	M_S.Gen.PLI_Status.Held	Generic	(All)	DB499.DBX2.4	BOOL	The phase logic interface for production in this unit is in Held.	PLI status for phase that is currently involved in product transfer
*	M_S.Gen.PLI_Status.Aborted	Generic	(All)	DB499.DBX2.5	BOOL	The phase logic interface for production in this unit is in Aborted.	PLI status for phase that is currently involved in product transfer
*	M_S.Gen.PLI_Status.Stopped	Generic	(All)	DB499.DBX2.6	BOOL	The phase logic interface for production in this unit is in Stopped.	PLI status for phase that is currently involved in product transfer
*	M_S.Gen.PLI_Status.Oper	Generic	(All)	DB499.DBX3.7	BOOL	The phase logic interface for production in this unit is in operation (Running or Held)	PLI status for phase that is currently involved in product transfer
	M_S.Gen.ProdReq	Generic	(Master)	DB499.DBX4.0	BOOL	This signal can be set when the machine is filling or producing and the ProductionEnable signal from the source is set. This signal can be set even if ProductAtUnit is not set. The selected/connected source unit is responsible to fill up the unit up to Connection point when ProductRequest is set. ProductAtUnit will be set when the source unit is filled up	Starts product pump. - If line not filled alreddy then the line will be filled up in this request. Answer on **ProdAtUnit.**
	M_S.Gen.WaterReq	Generic	(Master)	DB499.DBX4.1	BOOL	This signal is set when machine is emptying and needs water pressure to push product towards the machine . This signal must not be set as long as ProductAtUnit is set.	Activates water valve V03. which is used to flush supply line (e).
	M_S.Gen.ProdEn	Generic	(All)	DB499.DBX4.2	BOOL	Machine is ready for production and no running faults exist. Machine is in a status when it is OK to select sourse to machine for example not in CIP	Signal used for enabling selection of source.
*	M_S.Gen.FinalizeReq	Generic	(Master)	DB499.DBX4.3	BOOL	Machine requests the selected/connected source unit to finalize the production in a normal way (flush/emptying) to connection point. If the source unit controls the water internally(V01) set the signal until ProdAtUnit disappear	After completion the destination will be deselected.
*	~~M_S.Gen.ChangeSourReq~~	Generic	(Master)	DB499.DBX4.4	BOOL	This signal is set by this unit if a batch change also include a change of the source unit. - Can only be set if signal S>M_ProdQueEn = 1. The signal shall be set with the AmountOffset parameter in mind to get correct Amount for the first batch. Pulse the signal in x seconds.	Used for change of source tank at batch change that require change of raw material tank. - Pre condition is that there is source tank in queue.
*	~~M_S.Gen.ProdQeueEn~~	Generic	(Master)	DB499.DBX4.5	BOOL	Not used	
*	M_S.Gen.AmountCounter	Generic	(All, if flowmeter)	DB499.DBD6	REAL	The counter shall count the outlet Amount from the machine independent of what is in the pipe (water/mix/product). The counter counts from 0 to 10000 and then starts from 0 again and will never be reset.	
*	~~M_S.Gen.AmountOffset~~	Generic	(Slave)	DB499.DBD10	REAL	Not used	
*	M_S.Gen.WorkID	Generic	(All, if unit)	DB499.DBD2	DINT	The actual WorkID in this unit. This parameter is used by the destination connection/transfer phase for logging purpuse. -When start of new batch the new / updated ID is set to output to sourse directly.	
*	~~M_S.Gen.MaterialID~~	Generic	(All)	DB499.DBD26	DINT	Not used	(No TPM functionality for this parameter at the moment)
*	M_S.Gen.AllocStatus	Generic	(All)	DB499.DBW30	DINT	Allocation status of the unit, used to automatically allocate connections. The AllocStatus shall have the same value as actual Batch_ID for the unit.	
*	M_S.Gen.Estat	Generic	(All)	DB499.DBW42	INT	Actual Estat (equipment status) at this unit. (Filled, Emptied…) Can be used to check material separation rules.	
*	M_S.Gen.Cstat	Generic	(All)	DB499.DBW44	INT	Actual Cstat (cleanedt status) at this unit. (Cleaned, Not cleaned…) Can be used to check material separation rules.	
*	M_S.Gen.EquipmentID	Generic	(All)	DB499.DBW46	INT	The unique identity for the machine. This is used in the transfer phase in the connection to automatically create the PhaseID.	

Upstream : Source <-- Machine **Machine unique signals**

M_S.Spec.OKToActV15	Flex/Vtis	(Master)	DB499.DBX52.0	BOOL	Possible to activate V15 from remote if stand alone installation	
M_S.Spec.TWReq	Vtis	(Master)	DB499.DBX52.1	BOOL	Request for tower water (only for Vtis / Plus)	

© 2009 Tetra Pak

Ger Generic interface - Production related parameters

Downstream : Machine --> Destination

Communication path 4

		Used in branded machine	Set by	Address	Type	Description	Comments.
	M_D.WatchDog	Flex / Vtis		DB499.DBW54	INT	WatchDog Counter	
*	M_D.Gen.PLI_Status.Spare0	Generic	(All)	DB499.DBX56.0	BOOL		
*	M_D.Gen.PLI_Status.Idle	Generic	(All)	DB499.DBX56.1	BOOL	The phase logic interface for production in this unit is in Idle.	PLI status for phase that is currently involved in product transfer
*	M_D.Gen.PLI_Status.Running	Generic	(All)	DB499.DBX56.2	BOOL	The phase logic interface for production in this unit is in Running.	PLI status for phase that is currently involved in product transfer
*	M_D.Gen.PLI_Status.Complete	Generic	(All)	DB499.DBX56.3	BOOL	The phase logic interface for production in this unit is in Complete.	PLI status for phase that is currently involved in product transfer
*	M>D_PLI_Held	Generic	(All)	DB499.DBX56.4	BOOL	The phase logic interface for production in this unit is in Held.	PLI status for phase that is currently involved in product transfer
*	M_D.Gen.PLI_Status.Aborted	Generic	(All)	DB499.DBX56.5	BOOL	The phase logic interface for production in this unit is in Aborted.	PLI status for phase that is currently involved in product transfer
*	M_D.Gen.PLI_Status.Stopped	Generic	(All)	DB499.DBX56.6	BOOL	The phase logic interface for production in this unit is in Stopped.	PLI status for phase that is currently involved in product transfer
*	M_D.Gen.PLI_Status.Oper	Generic	(All)	DB499.DBX57.7	BOOL	The phase logic interface for production in this unit is in operation (Running or Held)	PLI status for phase that is currently involved in product transfer
	M_D.Gen.ProdEn	Generic	(All)	DB499.DBX58.0	BOOL	This unit is ready for production and no running faults exist. Machine is in a status when it is OK to select destination to machine for example not in CIP.	Signal used for enabling selection of destination.
	M_D.Gen.WaterEn	Generic	(All)	DB499.DBX58.1	BOOL	Steriliser is in sterile water circulation step. Allows the Tetra Alsafe to perform a sterile water rinse.	
	M_D.Gen.ProdAtUnit	Generic	(All)	DB499.DBX58.2	BOOL	The machine has product at destination connection point.	
*	M_D.Gen.FinalizeReq	Generic	(Master)	DB499.DBX58.3	BOOL	Machine requests the selected/connected destination to finalize the production in a normal way (flush/emptying), if the destination controls the water internally. Pulse this signal in x seconds. After completion the destination will be deselected.	Used to start a flush of Amount (n) in the destination inlet. Must not be set until after that the emptying of machine is done. Can only be used if there is a water valve in destination.
*	~~M_D.Gen.ChangeDestReq~~	Generic	(Master)	DB499.DBX58.4	BOOL	Set this signal to the destination when a batch change is done and the destination shall do the change over to next unit. If this machine is a slave the input ChangeDestRequest is sent to the output when this machine is filled up with the new batch.Pulse this signal in x seconds.	
	~~M_D.Gen.ProdQueEn~~	Generic	(All)	DB499.DBX58.5	BOOL	Not used	
*	M_D.Gen.AmountCounter	Generic	(All, if flowmeter)	DB499.DBD60	REAL	The counter shall count the outlet Amount from the machine independent of what is in the pipe (water/mix/product). The counter counts from 0 to 10000 and then starts from 0 again and will never be reset.	
*	~~M_D.Gen.AmountOffset~~	Generic	(Slave)	DB499.DBD64	REAL	Not used	
*	M_D.Gen.WorkID	Generic	(All, if unit)	DB499.DBD76	DINT	The actual WorkID in this unit. This parameter is used by the destination connection/transfer phase for logging purpuse. -When start of new batch the new / updated ID is set to output to destination directly. - When flying change of product the new / updated ID is set to output to destination when the new product reach the destination connectionpoit.	
*	M_D.Gen.MaterialID	Generic	(All)	DB499.DBD80	DINT	Actual material identity for the material sent out from Machine to Destination when the new material has reaced connection point for destination. Can be used to check material rules. (future use)	
*	M_D.Gen.AllocStatus	Generic	(All)	DB499.DBD84	DINT	Allocation status of the unit, used to automatically allocate connections. The AllocStatus shall have the same value as actual Batch_ID for the unit.	
*	M_D.Gen.Estat	Generic	(All)	DB499.DBW96	INT	Actual Estat (equipment status) at this unit. (Filled, Emptied…) Can be used to check material separation rules.	
*	M_D.Gen.Cstat	Generic	(All)	DB499.DBW98	INT	Actual Cstat (cleanedt status) at this unit. (Cleaned, Not cleaned…) Can be used to check material separation rules.	
*	M_D.Gen.EquipmentID	Generic	(All)	DB499.DBW100	INT	The unique identity for the machine. This is used in the transfer phase in the connection to automatically create the PhaseID.	
	M_D.Recl.Drain_Req	Generic	(All)	DB499.DBX106.0	BOOL	Request for open line to drain after connection point.	
	M_D.Recl.RecHP_AtUnit	Generic	(All)	DB499.DBX106.1	BOOL	The machine has ReclaimHP (Product/water mix) at outlet connection point for reclaim HP.	The machine has reclaim (high concentration of product) at outlet
	M_D.Recl.RecLP_AtUnit	Generic	(All)	DB499.DBX106.2	BOOL	The machine has ReclaimLP (Product/water mix) at outlet connection point for reclaim LP.	The machine has reclaim (low concentrate of product) at outlet.

Downstream : Machine --> Destinatior **Machine unige signals**

M_D.Spec.A1_WaterEn	Generic	(All)	DB499.DBX128.0	BOOL	Steriliser is in sterile water circulation step. Allows the Tetra Alsafe to perform a sterile water rinse.	
M_D.Spec.A1_ProdAtUnit	Generic	(All)	DB499.DBX128.1	BOOL	The machine has product at destination connection point.	
M_D.Spec.A1_SteamBarrReq	Flex / Vtis	(Master)	DB499.DBX128.2	BOOL	Steriliser request signal for Tetra Alsafe to turn on steam barrier at inlet valve cluster	Answer from Tetra Alsafe by siganl "Steam_barr_On"
M_D.Spec.A1_SterinCIP	Flex / Vtis	(Master)	DB499.DBX128.3	BOOL	Steriliser is in CIP, the Tetra Alsafe apply 2.7 bar steam barrier if the Alsafe is in sterile conditions.	
M_D.Spec.A1_spare	Flex / Vtis	(Master)	DB499.DBX128.4	BOOL		
M_D.Spec.A1_FlipISBReq	Flex / Vtis	(Master)	DB499.DBX128.5	BOOL	Tetra Alsafe. Flip signal for V162 when steriliser is in CIP circ. Steps.	
M_D.Spec.ProducRelease	Flex / Vtis	(Master)	DB499.DBX128.6	BOOL	Ok to release product	
M_D.Spec.spare	Flex / Vtis	(Master)	DB499.DBX128.7	BOOL		
M_D.Spec.spare	Flex / Vtis	(Master)	DB499.DBX129.0	BOOL		
M_D.Spec.spare	Flex / Vtis	(Master)	DB499.DBX129.1	BOOL		
M_D.Spec.spare	Flex / Vtis	(Master)	DB499.DBX129.2	BOOL		
M_D.Spec.spare	Flex / Vtis	(Master)	DB499.DBX129.3	BOOL		
M_D.Spec.spare	Flex / Vtis	(Master)	DB499.DBX129.4	BOOL		
M_D.Spec.spare	Flex / Vtis	(Master)	DB499.DBX129.5	BOOL		
M_D.Spec.spare	Flex / Vtis	(Master)	DB499.DBX129.6	BOOL		
M_D.Spec.spare	Flex / Vtis	(Master)	DB499.DBX129.7	BOOL		
M_D.Spec.spare	Flex / Vtis	(Master)	DB499.DBX130.0	BOOL		
M_D.Spec.spare	Flex / Vtis	(Master)	DB499.DBX130.1	BOOL	Tetra Alsafe. Flip signal for V162 when steriliser is in CIP circ. Steps.	
M_D.Spec.AFM_1_Start	Flex / Vtis	(Master)	DB499.DBX130.2	BOOL	OK to start AFM1	
M_D.Spec.AFM_1_Stop	Flex / Vtis	(Master)	DB499.DBX130.3	BOOL	Stop AFM 1	
M_D.Spec.AFM_2_Start	Flex / Vtis	(Master)	DB499.DBX130.4	BOOL	OK to start AFM2	
M_D.Spec.AFM_2_Stop	Flex / Vtis	(Master)	DB499.DBX130.5	BOOL	Stop AFM 2	
M_D.Spec.AFM_3_Start	Flex / Vtis	(Master)	DB499.DBX130.6	BOOL	OK to start AFM3	
M_D.Spec.AFM_3_Stop	Flex / Vtis	(Master)	DB499.DBX130.7	BOOL	Stop AFM 3	
M_D.Spec.AFM_4_Start	Flex / Vtis	(Master)	DB499.DBX131.0	BOOL	OK to start AFM4	
M_D.Spec.AFM_4_Stop	Flex / Vtis	(Master)	DB499.DBX131.1	BOOL	Stop AFM 4	

© 2009 Tetra Pak

Upstream : Machine <-- Destination

Communication path 4

		Used in branded machine	Set by	Address	Type	Description	
	D_M.WatchDog	Flex / Vtis		DB498.DB54	INT	Watch Dog / Transmission counter	
*	~~M_D.Gen.PLI_Status.Spare0~~	Generic	(All)	DB498.DBX56.0	BOOL	Not used	
*	~~M_D.Gen.PLI_Status.Idle~~	Generic	(All)	DB498.DBX56.1	BOOL	Not used	
*	~~M_D.Gen.PLI_Status.Running~~	Generic	(All)	DB498.DBX56.2	BOOL	Not used	
*	~~M_D.Gen.PLI_Status.Complete~~	Generic	(All)	DB498.DBX56.3	BOOL	Not used	
*	~~M_D.Gen.PLI_Status.Held~~	Generic	(All)	DB498.DBX56.4	BOOL	Not used	
*	~~M_D.Gen.PLI_Status.Aborted~~	Generic	(All)	DB498.DBX56.5	BOOL	Not used	
*	~~M_D.Gen.PLI_Status.Stopped~~	Generic	(All)	DB498.DBX56.6	BOOL	Not used	
*	~~M_D.Gen.PLI_Status.Oper~~	Generic	(All)	DB498.DBX57.7	BOOL	Not used	
	~~M_D.Gen.ProdReq~~	Generic	(Master)	DB498.DBX58.0	BOOL	Not used	
	M_D.Gen.WaterReq	Generic	(Master)	DB498.DBX58.1	BOOL	Alsafe is performing aseptic rinse	
	M_D.Gen.ProdEn	Generic	(All)	DB498.DBX58.2	BOOL	Any destination unit is selected/connected and enabled for production. Activation condition; - Before start of Machine, No interlock in Destination - After start of Machine, No RF in Destinaton	Sellected and connected OK,
*	~~M_D.Gen.FinalizeReq~~	Generic	(Master)	DB498.DBX58.3	BOOL	Not used	
*	~~M_D.Gen.ChangeSourceReq~~	Generic	(Master)	DB498.DBX58.4	BOOL	Not used	
*	~~M_D.Gen.ProdQueEn~~	Generic	(All)	DB498.DBX58.5	BOOL	Not used	
*	~~M_D.Gen.AmountCounter~~	Generic	(All, if flowmeter)	DB498.DBD60	REAL		
*	~~M_D.Gen.AmountOffset~~	Generic	(Slave)	DB498.DBD64	REAL	This parameter contains actual Amount in the selected/connected destination unit to be emptied at the end of production. The Amount is used by the master if the destination not are supplied internally by water pressure. The emptying at the end of production shall continoue with this Amount offset as additional Amount. If the destination unit has internal water supply the AmountOffset parameter is set to zero.	Amount in destination tank line (h)
*	~~M_D.Gen.WorkID~~	Generic	(All, if unit)	DB498.DBD76	DINT	Not used	
*	~~M_D.Gen.MaterialID~~	Generic	(All)	DB498.DBD80	DINT		(No TPM functionality for this parameter at the moment)
*	~~M_D.Gen.AllocStatus~~	Generic	(All)	DB498.DBD84	DINT	Not used	
*	~~M_D.Gen.Estat~~	Generic	(All)	DB498.DBW96	INT	Actual Estat (equipment status) at this unit. (Filled, Emptied…) Can be used to check material separation rules.	
*	~~M_D.Gen.Cstat~~	Generic	(All)	DB498.DBW98	INT	Actual Cstat (cleanedt status) at this unit. (Cleaned, Not cleaned…) Can be used to check material separation rules.	
*	~~M_D.Gen.EquipmentID~~	Generic	(All)	DB498.DBD100	INT	Not used	
	M_D.Recl.RecHP_En	Generic	(Slave)	DB498.DBX106.0	BOOL	ReclaimHP receiver (Product/water mix) at reclaimHP connection point is prepared to receive reclaim and no valve faults in the reclaim HP line.	
	M_D.Recl.RecLP_En	Generic	(Slave)	DB498.DBX106.1	BOOL	ReclaimLP receiver (Product/water mix) at reclaimLP connection point is prepared to receive reclaim and no valve faults in the reclaim LP line.	
	M_D.Recl.DrainEn	Generic		DB498.DBX106.2	BOOL	Drain receiver at outlet connection point is prepared to receive water and no valve faults in destination tank line .	In case of FB fault this signal is set to 0

Upstream : Machine <-- Destinatior **Machine unige signals**

D_M.Spec.A1_SteamBarrOn	Flex / Vtis	(Slave)	DB498.DBX128.0	BOOL	Steam barrier is on, if not the Steriliser will not start sterilising timer.	
D_M.Spec.A1_ProductionOn	Flex / Vtis	(Slave)	DB498.DBX128.1	BOOL	Alsafe is in production steps, filling and/or emptying.	
D_M.Spec.A1_HighLevel	Flex / Vtis	(Slave)	DB498.DBX128.2	BOOL	High level in Alsafe, makes the steriliser to start emptying out the product.	
D_M.Spec.A1_MediumLevel	Flex / Vtis	(Slave)	DB498.DBX128.3	BOOL		
D_M.Spec.spare	Flex / Vtis	(Slave)	DB498.DBX128.4	BOOL		
D_M.Spec.spare	Flex / Vtis	(Slave)	DB498.DBX128.5	BOOL		
D_M.Spec.spare	Flex / Vtis	(Slave)	DB498.DBX128.6	BOOL		
D_M.Spec.spare	Flex / Vtis	(Slave)	DB498.DBX128.7	BOOL		
D_M.Spec.spare	Flex / Vtis	(Slave)	DB498.DBX129.0	BOOL		
D_M.Spec.AFM_1_Ready	Flex / Vtis	(Slave)	DB498.DBX129.1	BOOL	AFM 1 Ready for production	
D_M.Spec.AFM_1_Prod	Flex / Vtis	(Slave)	DB498.DBX129.2	BOOL	AFM 1 in production	
D_M.Spec.AFM_1_Barr_On	Flex / Vtis	(Slave)	DB498.DBX129.3	BOOL	AFM 1 steam barrier on	
D_M.Spec.AFM_2_Ready	Flex / Vtis	(Slave)	DB498.DBX129.4	BOOL	AFM 2 Ready for production	
D_M.Spec.AFM_2_Prod	Flex / Vtis	(Slave)	DB498.DBX129.5	BOOL	AFM 2 in production	
D_M.Spec.AFM_2_Barr_On	Flex / Vtis	(Slave)	DB498.DBX129.6	BOOL	AFM 2 steam barrier on	
D_M.Spec.AFM_3_Ready	Flex / Vtis	(Slave)	DB498.DBX129.7	BOOL	AFM 3 Ready for production	
D_M.Spec.AFM_3_Prod	Flex / Vtis	(Slave)	DB498.DBX130.0	BOOL	AFM 3 in production	
D_M.Spec.AFM_3_Barr_On	Flex / Vtis	(Slave)	DB498.DBX130.1	BOOL	AFM 3 steam barrier on	
D_M.Spec.AFM_4_Ready	Flex / Vtis	(Slave)	DB498.DBX130.2	BOOL	AFM 4 Ready for production	
D_M.Spec.AFM_4_Prod	Flex / Vtis	(Slave)	DB498.DBX130.3	BOOL	AFM 4 in production	
D_M.Spec.AFM_4_Barr_On	Flex / Vtis	(Slave)	DB498.DBX130.4	BOOL	AFM 4 steam barrier on	

Notes

* = optional functionailty (also covered by Tetra PlantMaster)

Each stream in or out from the machine will have interface described above. E.g. two streams out from a machine (Cream and milk out from a pasteuriser) will give the double set of signa

The generic interface signals described above is the base set of signals to transfer product in the plan
The additional module signals (Flex, Vtis, Lacta, Drink) are used to add module unique functionality that is not covered by the base s

© 2009 Tetra Pak

Communication path 5

CIP interface - Cleaning of machine if machine is master

From remote CIP concentrate system

Communication path 5

		Usage	Set by	Adress	Type	Description	Comment
CC_M.WatchDog		CIP Conc. **	(CIP Conc. system)	DB498.DBW132.0	INT	Watch Dog / Transmission counter	
CC_M.ConcEn		CIP Conc. **	(CIP Conc. system)	DB498.DBX134.0	BOOL	CIP concentrate system set this when it is allowed to run cleaning and no running faults exist.	

To remote CIP concentrate system

		Usage	Set by	Adress	Type	Description	Comment
M_CC.WatchDog		CIP Conc. **	(Machine)	DB499.DBW132.0	INT	Acknowledge WatchDog Counter	
M_CC.Conc.LyeReq		CIP Conc. **	(Machine)	DB499.DBX134.0	BOOL	The machine requests lye from the external CIP concetrate system	
M_CC.Conc.AcidReq		CIP Conc. **	(Machine)	DB499.DBX134.1	BOOL	The machine requests acid from the external CIP concetrate system	

** = This signal is used if the machine running with internal CIP system and is using concentrate from external CIP concentrate system.

© 2009 Tetra Pak

Communication path 6

CIP interface - Cleaning of inlet pipe Machine or **Tetra Alsafe, remote CIP system is master of the cleaning sequence**

From remote CIP system

Communication path 6

	Alcip name	Used in	Set by	Adress	Type	Description	Comment
CC_M.WatchDog		Tank CIP	(CIP system)	DB498.DBW132	INT	Watch Dog / Transmission counter	
CC_M.CipReq	CIP-REQ	Inlet / Tank CIP	(CIP system)	DB498.DBX136.0	BOOL	Request to set the object in CIP mode	Open loop for CIP of the inlet line **or** start pressurizing Alsafe.
CC_M.CipRun	CIP-RUN	Inlet / Tank CIP	(CIP system)	DB498.DBX136.1	BOOL	Used to step the CIP object from CIP preparation in to CIP run. If signal goes low and CIP object is not in preparartion and not in held the CIP object will be put in held. An alarm will be trigged. CIP can only be restarted from CIP system by set this	Used to step the Alsafe CIP from the first step (pressurising tank) to the second (rinse tank).
CC_M.CipExtFlipOKTostart	CIP-FLIPOkTo Start	Inlet / Tank CIP	(CIP system)	DB498.DBX136.2	BOOL	Starts the flip sequense. The CIP object starts one flip sequense when positive flank. If signal is keep high more than X minutes another flip sequense will be started.	Remote system set this when it is allowed to flip valves in the CIP object that is included in the CIP route.
~~Reserved~~		~~Inlet / Tank CIP~~	~~(CIP system)~~	DB498.DBX136.3	~~BOOL~~		
CC_M.CipEnd	CIP-END	Inlet / Tank CIP	(CIP system)	DB498.DBX136.4	BOOL	Finish the cleaning and set the cleaning memory in CIP object. Resets the CipObjReady -signal. The signal should stay high until CipObjReady signal = 0.	
CC_M.CipTerminated	CIP-Termin.	Inlet / Tank CIP	(CIP system)	DB498.DBX136.5	BOOL	Finish the cleaning but don't set the cleaning memory in CIP object. Resets the CipObjReady -signal. The signal should stay high until CipObjReady signal = 0.	Used if the Cip station terminates the Cip without completed cip program.
~~Reserved~~	~~--~~			~~DB498.DBX136.6~~	~~BOOL~~		
~~CC_M.CIPnoPressureFlip~~		~~Inlet / Tank CIP~~	~~(Plant_CIP system)~~	~~DB498.DBX140.0~~	~~BOOL~~	~~Starts the flip sequense for valves that requires pressure less flip. The CIP object starts one flip sequense when positive flank. If signal is keep high more than X minutes another flip sequense will be started.~~	~~Remote system set this when it is allowed to flip valves in the CIP object that is included in the CIP route.~~
~~Spare~~	~~--~~		~~(Plant_CIP system)~~	~~DB498.DBX140.1~~	~~BOOL~~		

To remote CIP system

	Alcip name	Usage	Set by	Adress	Type	Description	Comment
M_CC.WatchDog			(CIP object)	DB499.DBW132	INT	Acknowledge WatchDog Counter	
M_CC.ObjEn	--	Inlet / Tank CIP	(CIP object)	DB499.DBX136.0		The CIP object set this when it is allowed to clean, no interlock and no running faults exist.	Information to remote CIP that it is OK to request CIP.
M_CC.ObjReady	OBJ-Ready-x	Inlet / Tank CIP	(CIP object)	DB499.DBX136.1	BOOL	Goes high when the CIP oject has finished preparations for CIP. It is keept high during the whole CIP even if the CIP of the object is halted due to fault in Cip system. Signal goes low when the CIP object receives signal CipEnd signal or CipTerminated or if the CIP is stopped from the CIP object, manually or due to an alarm.	
~~Reserved~~	~~--~~			DB499.DBX136.2	~~BOOL~~		
~~M_CC.StopPressPump~~	~~StopPress-Pump~~	~~Inlet / Tank CIP~~	~~(CIP object)~~	DB499.DBX136.3	~~BOOL~~		~~Used both for pressure less flip~~
~~Reserved~~	~~--~~			DB499.DBX136.4	~~BOOL~~		
~~Reserved~~	~~--~~			DB499.DBX136.5	~~BOOL~~		
~~Reserved~~	~~--~~			DB499.DBX136.6	~~BOOL~~		
M_CC.ExtFlipCompleted	ExtFlipCompl	Inlet / Tank CIP	(CIP object)	DB499.DBX136.7	BOOL	This signal is set when the flip sequense are completed and keept high until next FLIPOkStart signals comes or when the CIP is finished.	Used both for pressure less flip and flip with pressure.
~~Reserved~~	~~--~~			~~DB499.DBX137.0 to DBX139.7~~	~~BOOL~~		

© 2009 Tetra Pak

Program parameter list.

Reg. No	Address	Symbol	Description	Unit:	Original	Changed
0	PAR_DINT[0]		STEP_0 //	DINT	0	
1	PAR_DINT[1]		STEP_1 // STEP 1 ACT.VALVES	DINT	5	
2	PAR_DINT[2]		STEP_2 // STEP 2 ACT PUMPS	DINT	5	
3	PAR_DINT[3]		STEP_3 // STEP 3 FILL UP PLANT	DINT	117	
4	PAR_DINT[4]		STEP_4 // STEP 4 ACT.STEAM	DINT	30	
5	PAR_DINT[5]		STEP_5 // STEP 5 HEATING	DINT	25	
6	PAR_DINT[6]		STEP_6 // STEP 6 STERILIZING	DINT	1800	
7	PAR_DINT[7]		STEP_7 // STEP 7 COOLING 1	DINT	60	
8	PAR_DINT[8]		STEP_8 //	DINT	0	
9	PAR_DINT[9]		STEP_9 //	DINT	0	
10	PAR_DINT[10]		STEP_10 // STEP 10 COOLING 2	DINT	60	
11	PAR_DINT[11]		STEP_11 // STEP 11 COOLING 3	DINT	30	
12	PAR_DINT[12]		STEP_12 // STEP 12 STABILISING	DINT	60	
13	PAR_DINT[13]		STEP_13 // Change flow control	DINT	0	
14	PAR_DINT[14]		STEP_14 //	DINT	0	
15	PAR_DINT[15]		STEP_15 //	DINT	0	
16	PAR_DINT[16]		STEP_16 //	DINT	0	
17	PAR_DINT[17]		STEP_17 // STEP 17 STERILE WATER	DINT	0	
18	PAR_DINT[18]		STEP_18 //	DINT	0	
19	PAR_DINT[19]		STEP_19 //	DINT	0	
20	PAR_DINT[20]		STEP_20 // Fill up supply line with water	DINT	15	
21	PAR_DINT[21]		STEP_21 // Prepare production	DINT	0	
22	PAR_DINT[22]		STEP_22 // Fill supply line, mix zone to BTD	DINT	0	
23	PAR_DINT[23]		STEP_23 // Fill pure product in line into BTD	DINT	0	
24	PAR_DINT[24]		STEP_24 // Empty BTD	DINT	0	
25	PAR_DINT[25]		STEP_25 // Water from HB tank	DINT	8	
26	PAR_DINT[26]		STEP_26 // Fill BTD over LL	DINT	0	
27	PAR_DINT[27]		STEP_27 // Fill machine, mix zone to connection point	DINT	195	
28	PAR_DINT[28]		STEP_28 // Fill machine, pure product to connection point	DINT	13	
29	PAR_DINT[29]		STEP_29 // Production	DINT	0	
30	PAR_DINT[30]		STEP_30 // Empty tank line	DINT	0	
31	PAR_DINT[31]		STEP_31 // Empty supply line	DINT	0	
32	PAR_DINT[32]		STEP_32 //	DINT	0	
33	PAR_DINT[33]		STEP_33 //	DINT	0	
34	PAR_DINT[34]		STEP_34 //	DINT	0	

Rev.	Date/ Sign.	Description

Tetra Therm Aseptic VTIS
T5844130774
Parameter list

Tetra Pak
LUND **SWEDEN**

Doc.type:					
Dept.	Design/Drawn	Template doc. rev.	Date	Revision	
BU DBF	**TOJ/**	**1.00.30**	**2016-09-28**	**-**	**PLCP5844130774**

This document and its content are our exclusive property and must not be copied, reproduced, transmitted or communicated to any other party or used for purposes not expressly permitted by us. Only to the extent expressly agreed by us this document may constitute a contractual obligation on our part.

Program parameter list.

Reg. No	Address	Symbol	Description	Unit:	Original	Changed
35	PAR_DINT[35]		STEP_35 //	DINT	0	
36	PAR_DINT[36]		STEP_36 //	DINT	0	
37	PAR_DINT[37]		STEP_37 //	DINT	0	
38	PAR_DINT[38]		STEP_38 //	DINT	0	
39	PAR_DINT[39]		STEP_39 //	DINT	0	
40	PAR_DINT[40]		STEP_40 // Empty BTD	DINT	0	
41	PAR_DINT[41]		STEP_41 // Fill mix zone HP into BTD	DINT	0	
42	PAR_DINT[42]		STEP_42 // Empty BTD	DINT	0	
43	PAR_DINT[43]		STEP_43 // Empty machine	DINT	171	
44	PAR_DINT[44]		STEP_44 // Empty machine to reclaim	DINT	104	
45	PAR_DINT[45]		STEP_45 // Rinse machine	DINT	29	
46	PAR_DINT[46]		STEP_46 //	DINT	0	
47	PAR_DINT[47]		STEP_47 //	DINT	0	
48	PAR_DINT[48]		STEP_48 //	DINT	0	
49	PAR_DINT[49]		STEP_49 //	DINT	0	
50	PAR_DINT[50]		STEP_50 //	DINT	0	
51	PAR_DINT[51]		STEP_51 // STEP 51 WAITING FOR METERING	DINT	0	
52	PAR_DINT[52]		STEP_52 // STEP 52 CAUSTIC DOSING	DINT	258	
53	PAR_DINT[53]		STEP_53 // STEP 53 CAUSTIC CIRCULATION	DINT	1200	
54	PAR_DINT[54]		STEP_54 // STEP 54 BTD EMPTYING	DINT	0	
55	PAR_DINT[55]		STEP_55 // STEP 55 RINSING	DINT	234	
56	PAR_DINT[56]		STEP_56 //	DINT	0	
57	PAR_DINT[57]		STEP_57 // STEP 57 ACID DOSING	DINT	234	
58	PAR_DINT[58]		STEP_58 //	DINT	0	
59	PAR_DINT[59]		STEP_59 //	DINT	0	
60	PAR_DINT[60]		STEP_60 // STEP 60 ACID CIRCULATION	DINT	0	
61	PAR_DINT[61]		STEP_61 // STEP 61 BTD EMPTYING	DINT	0	
62	PAR_DINT[62]		STEP_62 // STEP 62 RINSING	DINT	234	
63	PAR_DINT[63]		STEP_63 //	DINT	0	
64	PAR_DINT[64]		STEP_64 //	DINT	0	
65	PAR_DINT[65]		STEP_65 //	DINT	0	
66	PAR_DINT[66]		STEP_66 //	DINT	0	
67	PAR_DINT[67]		STEP_67 //	DINT	0	
68	PAR_DINT[68]		STEP_68 //	DINT	0	
69	PAR_DINT[69]		STEP_69 //	DINT	0	

Rev.	Date/ Sign.	Description

Tetra Therm Aseptic VTIS
T5844130774
Parameter list

Doc.type:

Dept.	Design/Drawn	Template doc. rev.	Date	Revision
BU DBF	**TOJ/**	**1.00.30**	**2016-09-28**	**-**

Tetra Pak
LUND **SWEDEN**
PLCP5844130774

This document and its content are our exclusive property and must not be copied, reproduced, transmitted or communicated to any other party or used for purposes not expressly permitted by us. Only to the extent expressly agreed by us this document may constitute a contractual obligation on our part.

Program parameter list.

Reg. No	Address	Symbol	Description	Unit:	Original	Changed
70	PAR_DINT[70]		STEP_70 // STEP 70 BTD EMPTYING	DINT	0	
71	PAR_DINT[71]		STEP_71 // STEP 71 RINSING	DINT	600	
72	PAR_DINT[72]		STEP_72 //	DINT	0	
73	PAR_DINT[73]		STEP_73 //	DINT	0	
74	PAR_DINT[74]		STEP_74 //	DINT	0	
75	PAR_DINT[75]		STEP_75 //	DINT	0	
76	PAR_DINT[76]		STEP_76 //	DINT	0	
77	PAR_DINT[77]		STEP_77 //	DINT	0	
78	PAR_DINT[78]		STEP_78 //	DINT	0	
79	PAR_DINT[79]		STEP_79 //	DINT	0	
80	PAR_DINT[80]		STEP_80 // Activate valves	DINT	5	
81	PAR_DINT[81]		STEP_81 // Activate motors / Empty tank line	DINT	0	
82	PAR_DINT[82]		STEP_82 // Empty supply line	DINT	0	
83	PAR_DINT[83]		STEP_83 // Empty BTD	DINT	0	
84	PAR_DINT[84]		STEP_84 // Empty to reclaim	DINT	285	
85	PAR_DINT[85]		STEP_85 // Rinsing	DINT	29	
86	PAR_DINT[86]		STEP_86 //	DINT	0	
87	PAR_DINT[87]		STEP_87 //	DINT	0	
88	PAR_DINT[88]		STEP_88 //	DINT	0	
89	PAR_DINT[89]		STEP_89 //	DINT	0	
90	PAR_DINT[90]		STEP_90 //	DINT	0	
91	PAR_DINT[91]		STEP_91 //	DINT	0	
92	PAR_DINT[92]		STEP_92 //	DINT	0	
93	PAR_DINT[93]		STEP_93 //	DINT	0	
94	PAR_DINT[94]		STEP_94 //	DINT	0	
95	PAR_DINT[95]		STEP_95 //	DINT	0	
96	PAR_DINT[96]		STEP_96 //	DINT	0	
97	PAR_DINT[97]		STEP_97 //	DINT	0	
98	PAR_DINT[98]		STEP_98 //	DINT	0	
99	PAR_DINT[99]		STEP_99 //	DINT	0	
100	PAR_DINT[100]		STEP_100 //	DINT	0	
101	PAR_DINT[101]		STEP_101 // STEP 101 ACT. VALVES	DINT	5	
102	PAR_DINT[102]		STEP_102 // STEP 102 ACT. PUMPS	DINT	5	
103	PAR_DINT[103]		STEP_103 // STEP 103 FILL UP PLANT	DINT	117	
104	PAR_DINT[104]		STEP_104 // STEP 104 ACT. STEAM	DINT	25	

Rev.	Date/ Sign.	Description

Tetra Therm Aseptic VTIS
T5844130774
Parameter list

Doc.type:

Dept.	Design/Drawn	Template doc. rev.	Date	Revision
BU DBF	**TOJ/**	**1.00.30**	**2016-09-28**	**-**

Tetra Pak
LUND **SWEDEN**
PLCP5844130774

This document and its content are our exclusive property and must not be copied, reproduced, transmitted or communicated to any other party or used for purposes not expressly permitted by us. Only to the extent expressly agreed by us this document may constitute a contractual obligation on our part.

Program parameter list.

Reg. No	Address	Symbol	Description	Unit:	Original	Changed
105	PAR_DINT[105]		STEP_105 //	DINT	0	
106	PAR_DINT[106]		STEP_106 //	DINT	0	
107	PAR_DINT[107]		STEP_107 //	DINT	0	
108	PAR_DINT[108]		STEP_108 //	DINT	0	
109	PAR_DINT[109]		STEP_109 //	DINT	0	
110	PAR_DINT[110]		STEP_110 //	DINT	0	
111	PAR_DINT[111]		STEP_111 // STEP 111 RINSING 1	DINT	234	
112	PAR_DINT[112]		STEP_112 // STEP 112 WAITING FOR METERING	DINT	0	
113	PAR_DINT[113]		STEP_113 // STEP 113 CAUSTIC STEP DOSING	DINT	258	
114	PAR_DINT[114]		STEP_114 // STEP 114 CAUSTIC CIRCULATION see PAR-DINT 300 OR SETTINGS FOR PAC OR ICIP	DINT	1800	
115	PAR_DINT[115]		STEP_115 // STEP 115 BTD EMPTYING	DINT	0	
116	PAR_DINT[116]		STEP_116 //	DINT	0	
117	PAR_DINT[117]		STEP_117 //	DINT	0	
118	PAR_DINT[118]		STEP_118 //	DINT	0	
119	PAR_DINT[119]		STEP_119 //	DINT	0	
120	PAR_DINT[120]		STEP_120 //	DINT	0	
121	PAR_DINT[121]		STEP_121 // STEP 121 RINSING + METERING	DINT	234	
122	PAR_DINT[122]		STEP_122 // STEP 122 RELEASE VACUUM	DINT	30	
123	PAR_DINT[123]		STEP_123 // STEP 123 WAITING FOR METERING	DINT	0	
124	PAR_DINT[124]		STEP_124 // STEP 124 ACID DOSING	DINT	258	
125	PAR_DINT[125]		STEP_125 // STEP 125 ACID CIRCULATION see PAR-DINT 301 OR SETTINGS FOR PAC OR ICIP	DINT	1200	
126	PAR_DINT[126]		STEP_126 // STEP 126 BTD EMPTYING	DINT	0	
127	PAR_DINT[127]		STEP_127 //	DINT	0	
128	PAR_DINT[128]		STEP_128 //	DINT	0	
129	PAR_DINT[129]		STEP_129 //	DINT	0	
130	PAR_DINT[130]		STEP_130 //	DINT	0	
131	PAR_DINT[131]		STEP_131 // STEP 131 RINSING + METERING	DINT	238	
132	PAR_DINT[132]		STEP_132 // STEP 132 WAITING FOR METERING	DINT	0	
133	PAR_DINT[133]		STEP_133 // STEP 133 CAUSTIC DOSING	DINT	262	
134	PAR_DINT[134]		STEP_134 // STEP 134 CAUSTIC CIRCULATION see PAR-DINT 302 OR SETTINGS FOR PAC OR ICIP	DINT	1200	
135	PAR_DINT[135]		STEP_135 // STEP 135 BTD EMPTYING	DINT	0	
136	PAR_DINT[136]		STEP_136 // STEP 136 RINSE /METERING	DINT	238	
137	PAR_DINT[137]		STEP_137 //	DINT	0	
138	PAR_DINT[138]		STEP_138 //	DINT	0	
139	PAR_DINT[139]		STEP_139 //	DINT	0	

Rev.	Date/ Sign.	Description

Tetra Therm Aseptic VTIS
T5844130774
Parameter list

Tetra Pak

LUND **SWEDEN**

Doc.type:					
Dept.	Design/Drawn	Template doc. rev.	Date	Revision	
BU DBF	**TOJ/**	**1.00.30**	**2016-09-28**	**-**	**PLCP5844130774**

This document and its content are our exclusive property and must not be copied, reproduced, transmitted or communicated to any other party or used for purposes not expressly permitted by us. Only to the extent expressly agreed by us this document may constitute a contractual obligation on our part.

Program parameter list.

Reg. No	Address	Symbol	Description	Unit:	Original	Changed
140	PAR_DINT[140]		STEP_140 //	DINT	0	
141	PAR_DINT[141]		STEP_141 // STEP 141 RINSING + METERING	DINT	238	
142	PAR_DINT[142]		STEP_142 // STEP 142 WAITING FOR METERING	DINT	0	
143	PAR_DINT[143]		STEP_143 // STEP 143 ACID DOSING	DINT	262	
144	PAR_DINT[144]		STEP_144 // STEP 144 ACID CIRCULATION LT see PAR-DINT 303 OR SETTINGS FOR PAC OR ICIP	DINT	1200	
145	PAR_DINT[145]		STEP_145 // STEP 145 ACID CIRCULATION HT see PAR-DINT 304 OR SETTINGS FOR PAC OR ICIP	DINT	600	
146	PAR_DINT[146]		STEP_146 // STEP 146 BTD EMPTYING	DINT	0	
147	PAR_DINT[147]		STEP_147 // STEP 147 RINSING HT	DINT	168	
148	PAR_DINT[148]		STEP_148 // STEP 148 RINSING LT	DINT	238	
149	PAR_DINT[149]		STEP_149 // STEP 149 RINSING	DINT	476	
150	PAR_DINT[150]		STEP_150 //	DINT	0	
151	PAR_DINT[151]		STEP_151 //	DINT	0	
152	PAR_DINT[152]		STEP_152 //	DINT	0	
153	PAR_DINT[153]		STEP_153 //	DINT	0	
154	PAR_DINT[154]		STEP_154 //	DINT	0	
155	PAR_DINT[155]		STEP_155 //	DINT	0	
156	PAR_DINT[156]		STEP_156 //	DINT	0	
157	PAR_DINT[157]		STEP_157 //	DINT	0	
158	PAR_DINT[158]		STEP_158 //	DINT	0	
159	PAR_DINT[159]		STEP_159 //	DINT	0	
160	PAR_DINT[160]		STEP_200 // STEP 200 HOME POSITION	DINT	0	
161	PAR_DINT[161]		STEP_201 // STEP 201 WAITING BEFORE	DINT	30	
162	PAR_DINT[162]		STEP_202 // STEP 202 COOLING DOWN	DINT	5	
163	PAR_DINT[163]		STEP_203 // STEP 203 STOP FLOW	DINT	10	
164	PAR_DINT[164]		STEP_204 // STEP 204 CHANGE DIRECTION	DINT	3	
165	PAR_DINT[165]		STEP_205 // STEP 205 RUN BACKFLUSH	DINT	60	
166	PAR_DINT[166]		STEP_206 // STEP 206 STOP BACKFLUSH	DINT	10	
167	PAR_DINT[167]		STEP_207 // STEP 207 NORMAL DIRECTION	DINT	3	
168	PAR_DINT[168]		SPARE //	DINT	0	
169	PAR_DINT[169]		SPARE //	DINT	5	
170	PAR_DINT[170]		SPARE //	DINT	5	
171	PAR_DINT[171]		SPARE //	DINT	5	
172	PAR_DINT[172]		SPARE //	DINT	5	
173	PAR_DINT[173]		SPARE //	DINT	5	
174	PAR_DINT[174]		SPARE //	DINT	0	

Rev.	Date/ Sign.	Description

Tetra Therm Aseptic VTIS
T5844130774
Parameter list

Doc.type:

Dept.	Design/Drawn	Template doc. rev.	Date	Revision
BU DBF	**TOJ/**	**1.00.30**	**2016-09-28**	**-**

Tetra Pak
LUND **SWEDEN**
PLCP5844130774

This document and its content are our exclusive property and must not be copied, reproduced, transmitted or communicated to any other party or used for purposes not expressly permitted by us. Only to the extent expressly agreed by us this document may constitute a contractual obligation on our part.

Program parameter list.

Reg. No	Address	Symbol	Description	Unit:	Original	Changed
175	PAR_DINT[175]		SPARE //	DINT	0	
176	PAR_DINT[176]		STEP_400 // HD - Idle	DINT	0	
177	PAR_DINT[177]		STEP_401 // HD - Heating filter	DINT	0	
178	PAR_DINT[178]		STEP_402 // HD - Sterilise filter	DINT	0	
179	PAR_DINT[179]		STEP_403 // HD - Waiting	DINT	0	
180	PAR_DINT[180]		STEP_404 // HD - Spare (Close bypass)	DINT	5	
181	PAR_DINT[181]		STEP_405 // HD - Fill air damper 1	DINT	30	
182	PAR_DINT[182]		STEP_406 // HD - Fill air damper 2	DINT	30	
183	PAR_DINT[183]		STEP_407 // HD - Production	DINT	0	
184	PAR_DINT[184]		STEP_408 //	DINT	0	
185	PAR_DINT[185]		STEP_409 //	DINT	0	
186	PAR_DINT[186]		STEP_410 // HD - M6 bypass closed	DINT	0	
187	PAR_DINT[187]		STEP_411 // HD - Spare (M6 bypass - V51)	DINT	0	
188	PAR_DINT[188]		STEP_412 // HD - M6 bypass - V951	DINT	0	
189	PAR_DINT[189]		STEP_413 // HD - Seat lift injector 1	DINT	125	
190	PAR_DINT[190]		STEP_414 // HD - Seat lift injector 2	DINT	125	
191	PAR_DINT[191]		STEP_415 // HD - Dampers - stop M6	DINT	30	
192	PAR_DINT[192]		STEP_500 // STEP 500 READY	DINT	0	
193	PAR_DINT[193]		STEP_501 // STEP 501 FILL UPP DOSING PIPE	DINT	15	
194	PAR_DINT[194]		STEP_502 // STEP 502 DRAIN OVERFLOW	DINT	10	
195	PAR_DINT[195]		STEP_503 // STEP 503 METERING WATER	DINT	1	
196	PAR_DINT[196]		STEP_504 // STEP 504 METERING CONC.	DINT	0	
197	PAR_DINT[197]		STEP_505 // STEP 505 DOSING	DINT	0	
198	PAR_DINT[198]		STEP_506 // STEP 506 EMPTYING DOSING PIPE	DINT	5	
199	PAR_DINT[199]		STEP_507 // STEP 507 FILL UP TANK WITH WATER	DINT	0	
200	PAR_DINT[200]		STEP_508 // STEP 508 FLUSH 1 TANK TO BTD	DINT	10	
201	PAR_DINT[201]		STEP_509 // STEP 509 CHANGE TO DRAIN	DINT	5	
202	PAR_DINT[202]		STEP_510 // STEP 510 FLUSH 2 TANK TO DRAIN	DINT	10	
203	PAR_DINT[203]		STEP_511 // STEP 511 EMPTYING PIPE TO DRAIN	DINT	5	
204	PAR_DINT[204]		STEP_512 // STEP 512 FLUSH 3 TANK TO DRAIN	DINT	10	
205	PAR_DINT[205]		STEP_513 // STEP 513 EMPTYING PIPE TO DRAIN	DINT	5	
206	PAR_DINT[206]		STEP_514 // STEP 514 FILL UP TANK WITH WATER	DINT	10	
207	PAR_DINT[207]		STEP_515 // STEP 515 FLUSH 4 TANK TO BTD	DINT	10	
208	PAR_DINT[208]		STEP_516 // STEP 516 EMPTYING PIPE TO DRAIN	DINT	60	
209	PAR_DINT[209]		SPARE //	DINT	0	

Rev.	Date/ Sign.	Description

Tetra Therm Aseptic VTIS
T5844130774
Parameter list

Doc.type:

Dept.	Design/Drawn	Template doc. rev.	Date	Revision
BU DBF	**TOJ/**	**1.00.30**	**2016-09-28**	**-**

Tetra Pak
LUND **SWEDEN**
PLCP5844130774

This document and its content are our exclusive property and must not be copied, reproduced, transmitted or communicated to any other party or used for purposes not expressly permitted by us. Only to the extent expressly agreed by us this document may constitute a contractual obligation on our part.

Program parameter list.

Reg. No	Address	Symbol	Description	Unit:	Original	Changed
210	PAR_DINT[210]		SPARE //	DINT	0	
211	PAR_DINT[211]		SPARE //	DINT	0	
212	PAR_DINT[212]		SPARE //	DINT	0	
213	PAR_DINT[213]		SPARE //	DINT	0	
214	PAR_DINT[214]		SPARE //	DINT	0	
215	PAR_DINT[215]		MAXTIME 601 // STEP 601 MaxTime	DINT	240	
216	PAR_DINT[216]		STEP_600 // STEP 600 Rince SC - Idle	DINT	0	
217	PAR_DINT[217]		STEP_601 // STEP 601 Rince SC - Empty SC	DINT	0	
218	PAR_DINT[218]		STEP_602 // STEP 602 Rince SC - Wait for pure water	DINT	149	
219	PAR_DINT[219]		STEP_603 // STEP 603 Rince SC - Fill pure water 1	DINT	7	
220	PAR_DINT[220]		STEP_604 // STEP 604 Rince SC - Rinse nossels	DINT	5	
221	PAR_DINT[221]		STEP_605 // STEP 605 Rince SC - Fill pure water 2	DINT	7	
222	PAR_DINT[222]		STEP_606 // STEP 606 Rince SC - Rinse V314	DINT	4	
223	PAR_DINT[223]		STEP_607 // STEP 607 Rince SC - Fill pure water 3	DINT	7	
224	PAR_DINT[224]		STEP_608 // STEP 608 Rince SC - Serial rinse forward	DINT	0	
225	PAR_DINT[225]		SPARE //	DINT	0	
226	PAR_DINT[226]		SPARE //	DINT	0	
227	PAR_DINT[227]		SPARE //	DINT	0	
228	PAR_DINT[228]		SPARE //	DINT	0	
229	PAR_DINT[229]		SPARE //	DINT	0	
230	PAR_DINT[230]		SPARE //	DINT	0	
231	PAR_DINT[231]		SPARE //	DINT	0	
232	PAR_DINT[232]		SPARE //	DINT	0	
233	PAR_DINT[233]		SPARE //	DINT	0	
234	PAR_DINT[234]		SPARE //	DINT	0	
235	PAR_DINT[235]		SPARE //	DINT	0	
236	PAR_DINT[236]		SPARE //	DINT	0	
237	PAR_DINT[237]		SPARE //	DINT	0	
238	PAR_DINT[238]		SPARE //	DINT	0	
239	PAR_DINT[239]		SPARE //	DINT	0	
240	PAR_DINT[240]		EquipmentID // Unit id	DINT	9100	
241	PAR_DINT[241]		EquipmentIDCIP // Unit id for CIP	DINT	9140	
242	PAR_DINT[242]		CIPCircutID_CIP // Unit id used to identify CIP-circut	DINT	1	
243	PAR_DINT[243]		CIPCircutID_AIC // Unit id used to identify CIP-circut	DINT	2	
244	PAR_DINT[244]		EquipmentIDAFM1 // Unit id for AFM1	DINT	9301	

Rev.	Date/ Sign.	Description

Tetra Therm Aseptic VTIS
T5844130774
Parameter list

Doc.type:

Dept.	Design/Drawn	Template doc. rev.	Date	Revision
BU DBF	**TOJ/**	**1.00.30**	**2016-09-28**	**-**

Tetra Pak
LUND **SWEDEN**
PLCP5844130774

This document and its content are our exclusive property and must not be copied, reproduced, transmitted or communicated to any other party or used for purposes not expressly permitted by us. Only to the extent expressly agreed by us this document may constitute a contractual obligation on our part.

Program parameter list.

Reg. No	Address	Symbol	Description	Unit:	Original	Changed
245	PAR_DINT[245]		EquipmentIDAFM2 // Unit id for AFM2	DINT	9302	
246	PAR_DINT[246]		EquipmentIDAFM3 // Unit id for AFM3	DINT	9303	
247	PAR_DINT[247]		EquipmentIDAFM4 // Unit id for AFM4	DINT	9304	
248	PAR_DINT[248]		SPARE //	DINT	0	
249	PAR_DINT[249]		SPARE //	DINT	0	
250	PAR_DINT[250]		Afm1ActCap // Active capacity 1-4 selected for Afm1	DINT	2	
251	PAR_DINT[251]		Afm2ActCap // Active capacity 1-4 selected for Afm2	DINT	1	
252	PAR_DINT[252]		Afm3ActCap // Active capacity 1-4 selected for Afm3	DINT	2	
253	PAR_DINT[253]		Afm4ActCap // Active capacity 1-4 selected for Afm4	DINT	1	
254	PAR_DINT[254]		SPARE //	DINT	0	
255	PAR_DINT[255]		SPARE //	DINT	0	
256	PAR_DINT[256]		HOMO_DEL_ST27 //	DINT	100	
257	PAR_DINT[257]		ASHOMO_DEL_ST27 //	DINT	100	
258	PAR_DINT[258]		PRE_Y2_Y3_ST26 // DELAY ACTIVATION OF HOMO PRESSURE	DINT	100	
259	PAR_DINT[259]		StopM6PreEndStep // Stop delay before steps end in step 71 & 85 & 149	DINT	15	
260	PAR_DINT[260]		Homo damper filter SP //- Max allowed sterilizations with the same filter	DINT	50	
261	PAR_DINT[261]		DlyEnTSL901 // Delay time enabling TSL901 after filling air.	DINT	210	
262	PAR_DINT[262]		DlyEnTSL902 // Delay time enabling TSL902 after filling air.	DINT	235	
263	PAR_DINT[263]		DLY_V51A_STEP_11 // DELAY V51A DURING FIRST 20 SEC IN STEP 11	DINT	30	
264	PAR_DINT[264]		ACT_TIME_V92_CIP // ACTIVATION OF V92 IN CIP FLIP	DINT	20	
265	PAR_DINT[265]		V911 // Activation time of V911 in step 401	DINT	180	
266	PAR_DINT[266]		Delay activation of V11B	DINT	4	
267	PAR_DINT[267]		FlipIntevalV56_V57 // Interval between flip V56 & V57	DINT	240	
268	PAR_DINT[268]		DLY_FLIP_V17_RINSE // dly flipp of V17	DINT	30	
269	PAR_DINT[269]		FLIPTIME_V17 //	DINT	8	
270	PAR_DINT[270]		FLIPTIME_V11 //	DINT	45	
271	PAR_DINT[271]		DELAY_TIME_HIB // Delay in sec Auto start Hibernation	DINT	900	
272	PAR_DINT[272]		Adapt_temp_step6 // Remaining time in step 6 when change to production set point.	DINT	120	
273	PAR_DINT[273]		TC44FlexTimeAddSetpCool // Time to add to TC44Flex actual setpoint in cooling	DINT	180	
274	PAR_DINT[274]		TC44VtisTimeAddSetpCool // Time to add to TC44Vtis actual setpoint in cooling	DINT	180	
275	PAR_DINT[275]		START_HW_CIRCUIT_RINSE // Step 71 & 85 & 149 when rem. time < Xs	DINT	75	
276	PAR_DINT[276]		SPARE //	DINT	10	
277	PAR_DINT[277]		SPARE //	DINT	50	
278	PAR_DINT[278]		Accumulated # dosings //	DINT	0	
279	PAR_DINT[279]		Max number of dosings //	DINT	4	

Rev.	Date/ Sign.	Description

Tetra Therm Aseptic VTIS
T5844130774
Parameter list

Tetra Pak
LUND **SWEDEN**

Doc.type:					
Dept.	Design/Drawn	Template doc. rev.	Date	Revision	
BU DBF	**TOJ/**	**1.00.30**	**2016-09-28**	**-**	**PLCP5844130774**

This document and its content are our exclusive property and must not be copied, reproduced, transmitted or communicated to any other party or used for purposes not expressly permitted by us. Only to the extent expressly agreed by us this document may constitute a contractual obligation on our part.

Program parameter list.

Reg. No	Address	Symbol	Description	Unit:	Original	Changed
280	PAR_DINT[280]		SPARE //	DINT	2	
281	PAR_DINT[281]		SPARE //	DINT	2	
282	PAR_DINT[282]		SPARE //	DINT	2	
283	PAR_DINT[283]		SPARE //	DINT	2	
284	PAR_DINT[284]		SPARE //	DINT	2	
285	PAR_DINT[285]		SP_SPRAY_INFUSER // SET POINT SPRAY INFUSER % OF CIP STEP	DINT	50	
286	PAR_DINT[286]		TC544_HI_CAP_TIME //	DINT	0	
287	PAR_DINT[287]		TC544_LOW_CAP_TIM //	DINT	0	
288	PAR_DINT[288]		LC504_END_ST6_MAN // Remaining time in step 6 when LC504 increase SP and is set to man for 3 sec	DINT	4	
289	PAR_DINT[289]		SPARE //	DINT	0	
290	PAR_DINT[290]		GW_SCcool_PushTime // Timer SP push out GW from SC cooler	DINT	20	
291	PAR_DINT[291]		GW_SCcool_RinseTime // Timer SP rinse out GW from SC cooler	DINT	15	
292	PAR_DINT[292]		GW_ExtrCool_1_PushTime // Timer SP push out GW from extra cooler 1	DINT	30	
293	PAR_DINT[293]		GW_ExtrCool_1_RinsTime // Timer SP rinse out GW from extra cooler 1	DINT	20	
294	PAR_DINT[294]		GW_ExtrCool_2_PushTime // Timer SP push out GW from extra cooler 2	DINT	25	
295	PAR_DINT[295]		GW_ExtrCool_2_RinsTime // Timer SP rinse out GW from extra cooler 2	DINT	20	
296	PAR_DINT[296]		SPARE //	DINT	0	
297	PAR_DINT[297]		SPARE //	DINT	0	
298	PAR_DINT[298]		SPARE //	DINT	0	
299	PAR_DINT[299]		SPARE //	DINT	0	
300	PAR_DINT[300]		Step114_Standard_CIP // Circulation time in step 114 for standard CIP	DINT	1800	
301	PAR_DINT[301]		Step125_Standard_CIP // Circulation time in step 125 for standard CIP	DINT	1200	
302	PAR_DINT[302]		Step134_Standard_CIP // Circulation time in step 134 for standard CIP	DINT	1200	
303	PAR_DINT[303]		Step144_Standard_CIP // Circulation time in step 144 for standard CIP	DINT	1200	
304	PAR_DINT[304]		Step145_Standard_CIP // Circulation time in step 145 for standard CIP	DINT	600	
305	PAR_DINT[305]		SPARE //	DINT	0	
306	PAR_DINT[306]		SPARE //	DINT	0	
307	PAR_DINT[307]		SPARE //	DINT	0	
308	PAR_DINT[308]		SPARE //	DINT	0	
309	PAR_DINT[309]		TS331_Goto5_MaxTime	DINT	900	
310	PAR_DINT[310]		TS331_Goto10_MaxTime	DINT	900	
311	PAR_DINT[311]		TS06_Goto11_MaxTime	DINT	900	
312	PAR_DINT[312]		TS71_Goto12_MaxTime	DINT	900	
313	PAR_DINT[313]		SPARE //	DINT	0	
314	PAR_DINT[314]		NO_BF_ST_111 // NUMBER OF STEP 111 WHEN CIP BACKFLUSH	DINT	2	

Rev.	Date/ Sign.	Description

Tetra Therm Aseptic VTIS
T5844130774
Parameter list

Doc.type:

Dept.	Design/Drawn	Template doc. rev.	Date	Revision
BU DBF	**TOJ/**	**1.00.30**	**2016-09-28**	**-**

Tetra Pak
LUND **SWEDEN**
PLCP5844130774

This document and its content are our exclusive property and must not be copied, reproduced, transmitted or communicated to any other party or used for purposes not expressly permitted by us. Only to the extent expressly agreed by us this document may constitute a contractual obligation on our part.

Program parameter list.

Reg. No	Address	Symbol	Description	Unit:	Original	Changed
315	PAR_DINT[315]		NO_BF_ST_121 // NUMBER OF STEP 121 WHEN CIP BACKFLUSH	DINT	2	
316	PAR_DINT[316]		NO_BF_ST_131 // NUMBER OF STEP 131 WHEN CIP BACKFLUSH	DINT	2	
317	PAR_DINT[317]		NO_BF_ST_136 // NUMBER OF STEP 136 WHEN CIP BACKFLUSH	DINT	2	
318	PAR_DINT[318]		NO_BF_ST_141 // NUMBER OF STEP 141WHEN CIP BACKFLUSH	DINT	2	
319	PAR_DINT[319]		NO_BF_ST_148 // NUMBER OF STEP 148 WHEN CIP BACKFLUSH	DINT	2	
320	PAR_DINT[320]		SPARE //	DINT	0	
321	PAR_DINT[321]		SPARE //	DINT	0	
322	PAR_DINT[322]		SPARE //	DINT	0	
323	PAR_DINT[323]		SPARE //	DINT	0	
324	PAR_DINT[324]		V19.2 activation time in the beginning of CIP rinse steps (sec)	DINT	30	
325	PAR_DINT[325]		V19.2 activation time in the end of CIP rinse steps (sec)	DINT	120	
326	PAR_DINT[326]		V5 activation time in the end of CIP circ steps (sec)	DINT	120	
327	PAR_DINT[327]		SPARE //	DINT	0	
328	PAR_DINT[328]		SPARE //	DINT	0	
329	PAR_DINT[329]		SPARE //	DINT	0	
330	PAR_DINT[330]		STEP_300 // STEP 300 HOME POSITION	DINT	0	
331	PAR_DINT[331]		STEP_301 // STEP 301 START M6	DINT	10	
332	PAR_DINT[332]		STEP_302 // STEP 302 FREEZE M4	DINT	5	
333	PAR_DINT[333]		STEP_303 // STEP 303 CLOSE BY-PASS M6	DINT	5	
334	PAR_DINT[334]		STEP_304 // STEP 304 STOP M4	DINT	5	
335	PAR_DINT[335]		STEP_305 // STEP 305 FC6 IN AUTO MODE (from parameter 348,349)	DINT	30	
336	PAR_DINT[336]		STEP_306 // STEP 306 PC4 IN AUTO MODE	DINT	5	
337	PAR_DINT[337]		STEP_307 // STEP 307 DEAERATOR IN	DINT	180	
338	PAR_DINT[338]		STEP_308 // SPARE	DINT	0	
339	PAR_DINT[339]		STEP_309 // SPARE	DINT	0	
340	PAR_DINT[340]		STEP_310 // STEP 310 DEAERATOR OUT	DINT	5	
341	PAR_DINT[341]		STEP_311 // STEP 311 CONNECT M4	DINT	5	
342	PAR_DINT[342]		STEP_312 // STEP 312 M4 START (FC4 MAN)	DINT	5	
343	PAR_DINT[343]		STEP_313 // STEP 313 OPEN BY-PASS M6 (FC4 AUTO)	DINT	120	
344	PAR_DINT[344]		STEP_314 // STEP 314 STOP M6	DINT	5	
345	PAR_DINT[345]		STEP_315 // SPARE	DINT	0	
346	PAR_DINT[346]		SPARE //	DINT	0	
347	PAR_DINT[347]		SPARE //	DINT	0	
348	PAR_DINT[348]		STEP_305 // NOT ASEPTIC M6 STEP 305 - FC6 IN AUTO MODE (To parameter 335)	DINT	30	
349	PAR_DINT[349]		STEP_305 // ASEPTIC M6 STEP 305 - FC6 IN AUTO MODE (To parameter 335)	DINT	30	

Rev.	Date/ Sign.	Description

Tetra Therm Aseptic VTIS
T5844130774
Parameter list

Tetra Pak

LUND **SWEDEN**

Doc.type:					
Dept.	Design/Drawn	Template doc. rev.	Date	Revision	
BU DBF	**TOJ/**	**1.00.30**	**2016-09-28**	**-**	**PLCP5844130774**

This document and its content are our exclusive property and must not be copied, reproduced, transmitted or communicated to any other party or used for purposes not expressly permitted by us. Only to the extent expressly agreed by us this document may constitute a contractual obligation on our part.

Program parameter list.

Reg. No	Address	Symbol	Description	Unit:	Original	Changed
350	PAR_DINT[350]		SPARE //	DINT	0	
351	PAR_DINT[351]		SPARE //	DINT	0	
352	PAR_DINT[352]		SPARE //	DINT	0	
353	PAR_DINT[353]		SPARE //	DINT	0	
354	PAR_DINT[354]		SPARE //	DINT	0	
355	PAR_DINT[355]		SPARE //	DINT	0	
356	PAR_DINT[356]		SPARE //	DINT	0	
357	PAR_DINT[357]		SPARE //	DINT	0	
358	PAR_DINT[358]		SPARE //	DINT	0	
359	PAR_DINT[359]		SPARE //	DINT	0	
360	PAR_DINT[360]		SPARE //	DINT	0	
361	PAR_DINT[361]		SPARE //	DINT	0	
362	PAR_DINT[362]		SPARE //	DINT	0	
363	PAR_DINT[363]		SPARE //	DINT	0	
364	PAR_DINT[364]		SPARE //	DINT	0	
365	PAR_DINT[365]		SPARE //	DINT	0	
366	PAR_DINT[366]		SPARE //	DINT	0	
367	PAR_DINT[367]		SPARE //	DINT	0	
368	PAR_DINT[368]		SPARE //	DINT	0	
369	PAR_DINT[369]		SPARE //	DINT	0	
370	PAR_DINT[370]		SPARE //	DINT	0	
371	PAR_DINT[371]		SPARE //	DINT	0	
372	PAR_DINT[372]		SPARE //	DINT	0	
373	PAR_DINT[373]		SPARE //	DINT	0	
374	PAR_DINT[374]		SPARE //	DINT	0	
375	PAR_DINT[375]		SPARE //	DINT	0	
376	PAR_DINT[376]		SPARE //	DINT	0	
377	PAR_DINT[377]		SPARE //	DINT	0	
378	PAR_DINT[378]		SPARE //	DINT	0	
379	PAR_DINT[379]		SPARE //	DINT	0	
380	PAR_DINT[380]		SPARE //	DINT	0	
381	PAR_DINT[381]		SPARE //	DINT	0	
382	PAR_DINT[382]		SPARE //	DINT	0	
383	PAR_DINT[383]		SPARE //	DINT	0	
384	PAR_DINT[384]		SPARE //	DINT	0	

Rev.	Date/ Sign.	Description

Tetra Therm Aseptic VTIS
T5844130774
Parameter list

Doc.type:

Dept.	Design/Drawn	Template doc. rev.	Date	Revision
BU DBF	**TOJ/**	**1.00.30**	**2016-09-28**	**-**

Tetra Pak
LUND **SWEDEN**
PLCP5844130774

This document and its content are our exclusive property and must not be copied, reproduced, transmitted or communicated to any other party or used for purposes not expressly permitted by us. Only to the extent expressly agreed by us this document may constitute a contractual obligation on our part.

Program parameter list.

Reg. No	Address	Symbol	Description	Unit:	Original	Changed
385	PAR_DINT[385]		SPARE //	DINT	0	
386	PAR_DINT[386]		SPARE //	DINT	0	
387	PAR_DINT[387]		SPARE //	DINT	0	
388	PAR_DINT[388]		SPARE //	DINT	0	
389	PAR_DINT[389]		SPARE //	DINT	0	
390	PAR_DINT[390]		SPARE //	DINT	0	
391	PAR_DINT[391]		SPARE //	DINT	0	
392	PAR_DINT[392]		SPARE //	DINT	0	
393	PAR_DINT[393]		SPARE //	DINT	0	
394	PAR_DINT[394]		SPARE //	DINT	0	
395	PAR_DINT[395]		SPARE //	DINT	0	
396	PAR_DINT[396]		SPARE //	DINT	0	
397	PAR_DINT[397]		SPARE //	DINT	0	
398	PAR_DINT[398]		SPARE //	DINT	0	
399	PAR_DINT[399]		SPARE //	DINT	0	
400	PAR_DINT[400]		SPARE //	DINT	0	
401	PAR_DINT[401]		SPARE //	DINT	0	
402	PAR_DINT[402]		SPARE //	DINT	0	
403	PAR_DINT[403]		SPARE //	DINT	0	
404	PAR_DINT[404]		SPARE //	DINT	0	
405	PAR_DINT[405]		SPARE //	DINT	0	
406	PAR_DINT[406]		SPARE //	DINT	0	
407	PAR_DINT[407]		SPARE //	DINT	0	
408	PAR_DINT[408]		SPARE //	DINT	0	
409	PAR_DINT[409]		SPARE //	DINT	0	
410	PAR_DINT[410]		SPARE //	DINT	0	
411	PAR_DINT[411]		SPARE //	DINT	0	
412	PAR_DINT[412]		SPARE //	DINT	0	
413	PAR_DINT[413]		SPARE //	DINT	0	
414	PAR_DINT[414]		SPARE //	DINT	0	
415	PAR_DINT[415]		SPARE //	DINT	0	
416	PAR_DINT[416]		SPARE //	DINT	0	
417	PAR_DINT[417]		SPARE //	DINT	0	
418	PAR_DINT[418]		SPARE //	DINT	0	
419	PAR_DINT[419]		SPARE //	DINT	0	

Rev.	Date/ Sign.	Description

Tetra Therm Aseptic VTIS
T5844130774
Parameter list

Doc.type:

Dept.	Design/Drawn	Template doc. rev.	Date	Revision
BU DBF	**TOJ/**	**1.00.30**	**2016-09-28**	**-**

Tetra Pak
LUND **SWEDEN**
PLCP5844130774

This document and its content are our exclusive property and must not be copied, reproduced, transmitted or communicated to any other party or used for purposes not expressly permitted by us. Only to the extent expressly agreed by us this document may constitute a contractual obligation on our part.

Program parameter list.

Reg. No	Address	Symbol	Description	Unit:	Original	Changed
420	PAR_DINT[420]		SPARE //	DINT	0	
421	PAR_DINT[421]		SPARE //	DINT	0	
422	PAR_DINT[422]		SPARE //	DINT	0	
423	PAR_DINT[423]		SPARE //	DINT	0	
424	PAR_DINT[424]		SPARE //	DINT	0	
425	PAR_DINT[425]		SPARE //	DINT	0	
426	PAR_DINT[426]		SPARE //	DINT	0	
427	PAR_DINT[427]		SPARE //	DINT	0	
428	PAR_DINT[428]		DelayTimeAlarm 016 // Pre sterilisation fault TSL71	DINT	0	
429	PAR_DINT[429]		DelayTimeAlarm 017 // Low temp fault holding cell TSL42	DINT	0	
430	PAR_DINT[430]		DelayTimeAlarm 018 // CIP temp fault TSL71	DINT	600	
431	PAR_DINT[431]		DelayTimeAlarm 019 // Low level fault product BTD LSL08	DINT	0	
432	PAR_DINT[432]		DelayTimeAlarm 020 // Spare	DINT	0	
433	PAR_DINT[433]		DelayTimeAlarm 021 // Spare	DINT	0	
434	PAR_DINT[434]		DelayTimeAlarm 022 // Caustic fault	DINT	0	
435	PAR_DINT[435]		DelayTimeAlarm 023 // Acid fault	DINT	0	
436	PAR_DINT[436]		DelayTimeAlarm 024 // Filling machine not ready or redy but not started	DINT	5	
437	PAR_DINT[437]		DelayTimeAlarm 025 // Low air pressure to control panel PSL001	DINT	3	
438	PAR_DINT[438]		DelayTimeAlarm 026 // Product flow to high or to low	DINT	10	
439	PAR_DINT[439]		DelayTimeAlarm 027 // Product flow in CIP to high or to low	DINT	30	
440	PAR_DINT[440]		DelayTimeAlarm 028 // Battery for backup memory in PLC low	DINT	0	
441	PAR_DINT[441]		DelayTimeAlarm 029 // Alsafe not ready or high level	DINT	5	
442	PAR_DINT[442]		DelayTimeAlarm 030 // Low temp steam barrier TSL46	DINT	0	
443	PAR_DINT[443]		DelayTimeAlarm 031 // Low temp steam barrier TSL47	DINT	0	
444	PAR_DINT[444]		DelayTimeAlarm 032 // Low temp steam barrier TSL830	DINT	0	
445	PAR_DINT[445]		DelayTimeAlarm 033 // Cooling water pressure low PSL310	DINT	10	
446	PAR_DINT[446]		DelayTimeAlarm 034 // Low concentration fault QS76	DINT	0	
447	PAR_DINT[447]		DelayTimeAlarm 035 // Communication fault Alsafe 1	DINT	10	
448	PAR_DINT[448]		DelayTimeAlarm 036 // Communication fault source	DINT	10	
449	PAR_DINT[449]		DelayTimeAlarm 037 // Communication fault destination	DINT	10	
450	PAR_DINT[450]		DelayTimeAlarm 038 // Low steam pressure steam valve too mush open.	DINT	30	
451	PAR_DINT[451]		DelayTimeAlarm 039 // Low or high level in vacuum vessel.	DINT	60	
452	PAR_DINT[452]		DelayTimeAlarm 040 // Low pressure in hot water circuit PSL66	DINT	10	
453	PAR_DINT[453]		DelayTimeAlarm 041 // Feed back fault compressor AC	DINT	10	
454	PAR_DINT[454]		DelayTimeAlarm 042 // TT42 Broken	DINT	5	

Rev.	Date/ Sign.	Description

Tetra Therm Aseptic VTIS
T5844130774
Parameter list

Doc.type:

Dept.	Design/Drawn	Template doc. rev.	Date	Revision
BU DBF	**TOJ/**	**1.00.30**	**2016-09-28**	**-**

Tetra Pak
LUND **SWEDEN**
PLCP5844130774

This document and its content are our exclusive property and must not be copied, reproduced, transmitted or communicated to any other party or used for purposes not expressly permitted by us. Only to the extent expressly agreed by us this document may constitute a contractual obligation on our part.

Program parameter list.

Reg. No	Address	Symbol	Description	Unit:	Original	Changed
455	PAR_DINT[455]		DelayTimeAlarm 043 // TT71 Broken	DINT	5	
456	PAR_DINT[456]		DelayTimeAlarm 044 // TT46 Broken	DINT	5	
457	PAR_DINT[457]		DelayTimeAlarm 045 // TT47 Broken	DINT	5	
458	PAR_DINT[458]		DelayTimeAlarm 046 // TT830 Broken	DINT	5	
459	PAR_DINT[459]		DelayTimeAlarm 047 // TT44 Broken	DINT	5	
460	PAR_DINT[460]		DelayTimeAlarm 048 // Ratio TC 44 / TC331	DINT	180	
461	PAR_DINT[461]		DelayTimeAlarm 049 // Sterile fault TSL381	DINT	0	
462	PAR_DINT[462]		DelayTimeAlarm 050 // TT331 Broken	DINT	5	
463	PAR_DINT[463]		DelayTimeAlarm 051 // Condensation guard TSH331	DINT	5	
464	PAR_DINT[464]		DelayTimeAlarm 052 // Filter fault crank case Alex 400	DINT	10	
465	PAR_DINT[465]		DelayTimeAlarm 053 // Spare	DINT	10	
466	PAR_DINT[466]		DelayTimeAlarm 054 // Oil pressure fault crank case Alex 400	DINT	10	
467	PAR_DINT[467]		DelayTimeAlarm 055 // Spare	DINT	10	
468	PAR_DINT[468]		DelayTimeAlarm 056 // Oil temperature fault crank case Alex 400	DINT	5	
469	PAR_DINT[469]		DelayTimeAlarm 057 // Oil temperature fault gear box Alex 400	DINT	5	
470	PAR_DINT[470]		DelayTimeAlarm 058 // Spare	DINT	0	
471	PAR_DINT[471]		DelayTimeAlarm 059 // Spare	DINT	0	
472	PAR_DINT[472]		DelayTimeAlarm 060 // Emergency stop panel (Not used, constant 0 for safety)	DINT	0	
473	PAR_DINT[473]		DelayTimeAlarm 061 // Low temp steam barrier TSL831.	DINT	0	
474	PAR_DINT[474]		DelayTimeAlarm 062 // TT831 Broken	DINT	5	
475	PAR_DINT[475]		DelayTimeAlarm 063 // High mechine temp Alex 400	DINT	10	
476	PAR_DINT[476]		DelayTimeAlarm 064 // Sumary DelayTimeAlarm for PT100 broken	DINT	0	
477	PAR_DINT[477]		DelayTimeAlarm 065 // Differential pressure steam injector fault PSL63	DINT	60	
478	PAR_DINT[478]		DelayTimeAlarm 066 // Differential pressure steril cooler fault PSL62	DINT	60	
479	PAR_DINT[479]		DelayTimeAlarm 067 // Differential pressure steril cooler fault PSL61	DINT	60	
480	PAR_DINT[480]		DelayTimeAlarm 068 // Not valid recipe	DINT	2	
481	PAR_DINT[481]		DelayTimeAlarm 069 // High oil temp Alex	DINT	0	
482	PAR_DINT[482]		DelayTimeAlarm 070 // Oil level Alex LSH835	DINT	10	
483	PAR_DINT[483]		DelayTimeAlarm 071 // Oil level Alex LSL835	DINT	10	
484	PAR_DINT[484]		DelayTimeAlarm 072 // Pre ster temp fault TSL504	DINT	0	
485	PAR_DINT[485]		DelayTimeAlarm 073 // Pre ster temp fault TSL502	DINT	0	
486	PAR_DINT[486]		DelayTimeAlarm 074 // HC time fault infuser	DINT	1	
487	PAR_DINT[487]		DelayTimeAlarm 075 // High level in infuser LSH504	DINT	5	
488	PAR_DINT[488]		DelayTimeAlarm 076 // TT502 Broken	DINT	5	
489	PAR_DINT[489]		DelayTimeAlarm 077 // TT504 Broken	DINT	5	

Rev.	Date/ Sign.	Description

Tetra Therm Aseptic VTIS
T5844130774
Parameter list

Doc.type:

Dept.	Design/Drawn	Template doc. rev.	Date	Revision
BU DBF	**TOJ/**	**1.00.30**	**2016-09-28**	**-**

Tetra Pak
LUND **SWEDEN**
PLCP5844130774

This document and its content are our exclusive property and must not be copied, reproduced, transmitted or communicated to any other party or used for purposes not expressly permitted by us. Only to the extent expressly agreed by us this document may constitute a contractual obligation on our part.

Program parameter list.

Reg. No	Address	Symbol	Description	Unit:	Original	Changed
490	PAR_DINT[490]		DelayTimeAlarm 078 // High concentration fault QS76	DINT	0	
491	PAR_DINT[491]		DelayTimeAlarm 079 // Spare	DINT	0	
492	PAR_DINT[492]		DelayTimeAlarm 080 // Product not at unit	DINT	5	
493	PAR_DINT[493]		DelayTimeAlarm 081 // Communication fault with CIP station	DINT	10	
494	PAR_DINT[494]		DelayTimeAlarm 082 // Communication faultwith CIP concentrate	DINT	10	
495	PAR_DINT[495]		DelayTimeAlarm 083 // Comp Index for lye to high	DINT	0	
496	PAR_DINT[496]		DelayTimeAlarm 084 // Comp Index for lye to low	DINT	0	
497	PAR_DINT[497]		DelayTimeAlarm 085 // Comp Index for acid to high	DINT	0	
498	PAR_DINT[498]		DelayTimeAlarm 086 // Comp Index for acid to low	DINT	0	
499	PAR_DINT[499]		DelayTimeAlarm 087 // PT64 Diff pressuare fault	DINT	10	
500	PAR_DINT[500]		DelayTimeAlarm 088 // 10% storage left, change disk in recorder	DINT	1	
501	PAR_DINT[501]		DelayTimeAlarm 089 // LT504 broken	DINT	10	
502	PAR_DINT[502]		DelayTimeAlarm 090 // Product flow transmitter broken	DINT	1	
503	PAR_DINT[503]		DelayTimeAlarm 091 // High pressure in hot water circuit PSH66	DINT	10	
504	PAR_DINT[504]		DelayTimeAlarm 092 // High back pressure product PSH60	DINT	10	
505	PAR_DINT[505]		DelayTimeAlarm 093 // HC time fault	DINT	0	
506	PAR_DINT[506]		DelayTimeAlarm 094 // Production not enabled	DINT	5	
507	PAR_DINT[507]		DelayTimeAlarm 095 // Water not enabled	DINT	5	
508	PAR_DINT[508]		DelayTimeAlarm 096 // PT65 Diff pressure fault	DINT	10	
509	PAR_DINT[509]		DelayTimeAlarm 097 // Low water level CIP HB tank	DINT	10	
510	PAR_DINT[510]		DelayTimeAlarm 098 // Cond High Fault TQ76 rinse	DINT	1	
511	PAR_DINT[511]		DelayTimeAlarm 099 // Slow dosing of concentrate	DINT	60	
512	PAR_DINT[512]		DelayTimeAlarm 100 // Fast dosing of concentrate	DINT	60	
513	PAR_DINT[513]		DelayTimeAlarm 101 // Water meetering fault	DINT	120	
514	PAR_DINT[514]		DelayTimeAlarm 102 // Draining fault CIP HB tank	DINT	10	
515	PAR_DINT[515]		DelayTimeAlarm 103 // CIP HB tank over filled	DINT	60	
516	PAR_DINT[516]		DelayTimeAlarm 104 // Pre ster temp fault TSL901	DINT	0	
517	PAR_DINT[517]		DelayTimeAlarm 105 // Pre ster temp fault TSL902	DINT	0	
518	PAR_DINT[518]		DelayTimeAlarm 106 // LSL66	DINT	30	
519	PAR_DINT[519]		DelayTimeAlarm 107 // PSL847	DINT	10	
520	PAR_DINT[520]		DelayTimeAlarm 108 // TT04 Broken	DINT	5	
521	PAR_DINT[521]		DelayTimeAlarm 109 // TT06 Broken	DINT	5	
522	PAR_DINT[522]		DelayTimeAlarm 110 // TT362 Broken	DINT	5	
523	PAR_DINT[523]		DelayTimeAlarm 111 // TT64 Broken	DINT	5	
524	PAR_DINT[524]		DelayTimeAlarm 112 // NoTankInQue	DINT	10	

Rev.	Date/ Sign.	Description

Tetra Therm Aseptic VTIS
T5844130774
Parameter list

Tetra Pak
LUND **SWEDEN**

Doc.type:					
Dept.	Design/Drawn	Template doc. rev.	Date	Revision	
BU DBF	**TOJ/**	**1.00.30**	**2016-09-28**	**-**	**PLCP5844130774**

This document and its content are our exclusive property and must not be copied, reproduced, transmitted or communicated to any other party or used for purposes not expressly permitted by us. Only to the extent expressly agreed by us this document may constitute a contractual obligation on our part.

Program parameter list.

Reg. No	Address	Symbol	Description	Unit:	Original	Changed
525	PAR_DINT[525]		DelayTimeAlarm 113 // PSL846	DINT	30	
526	PAR_DINT[526]		DelayTimeAlarm 114 // LT10 Broken	DINT	0	
527	PAR_DINT[527]		DelayTimeAlarm 115 // Product in module	DINT	0	
528	PAR_DINT[528]		DelayTimeAlarm 116 // TT63.1 Broken	DINT	0	
529	PAR_DINT[529]		DelayTimeAlarm 117 // TT63.2 Broken	DINT	0	
530	PAR_DINT[530]		DelayTimeAlarm 118 // TT73 Broken	DINT	0	
531	PAR_DINT[531]		DelayTimeAlarm 119 // Differential pressure fault DPSL61	DINT	0	
532	PAR_DINT[532]		DelayTimeAlarm 120 // Differential pressure fault DPSL62	DINT	0	
533	PAR_DINT[533]		DelayTimeAlarm 121 // Differential pressure fault DPSL63	DINT	0	
534	PAR_DINT[534]		DelayTimeAlarm 122 // Differential pressure fault DPSL64	DINT	0	
535	PAR_DINT[535]		DelayTimeAlarm 123 // Hold tube pasteurization temperature fault TSL342A	DINT	0	
536	PAR_DINT[536]		DelayTimeAlarm 124 // Hold tube aseptic temperature fault TSL342B	DINT	0	
537	PAR_DINT[537]		DelayTimeAlarm 125 // Flash vessel pasteurization temperature fault TSL347A	DINT	0	
538	PAR_DINT[538]		DelayTimeAlarm 126 // Flash vessel aseptic temperature fault TSL347B	DINT	0	
539	PAR_DINT[539]		DelayTimeAlarm 127 // Flow divert valve temperature fault TSL73	DINT	0	
540	PAR_DINT[540]		DelayTimeAlarm 128 // Hold tube pressure fault PSL330/048	DINT	0	
541	PAR_DINT[541]		DelayTimeAlarm 129 // System flow rate fault FSH04	DINT	0	
542	PAR_DINT[542]		DelayTimeAlarm 130 // Flow divert valve position fault	DINT	0	
543	PAR_DINT[543]		DelayTimeAlarm 131 // Alsafe Diverted AIC/CIP - system may not be rinsed	DINT	0	
544	PAR_DINT[544]		DelayTimeAlarm 132 // Alsafe V100 Divert Position	DINT	0	
545	PAR_DINT[545]		DelayTimeAlarm 133 // Condensation guard TSHH331	DINT	0	
546	PAR_DINT[546]		DelayTimeAlarm 134 // Pre ster temp fault TSL51	DINT	0	
547	PAR_DINT[547]		DelayTimeAlarm 135 // Damper filter fault	DINT	0	
548	PAR_DINT[548]		DelayTimeAlarm 136 // TT901 Broken	DINT	5	
549	PAR_DINT[549]		DelayTimeAlarm 137 // TT902 Broken	DINT	5	
550	PAR_DINT[550]		DelayTimeAlarm 138 // TT51 Broken	DINT	5	
551	PAR_DINT[551]		DelayTimeAlarm 139 //	DINT	0	
552	PAR_DINT[552]		DelayTimeAlarm 140 // TT845 Broken	DINT	5	
553	PAR_DINT[553]		DelayTimeAlarm 141 // Differential pressure fault DPSL67	DINT	10	
554	PAR_DINT[554]		DelayTimeAlarm 142// Communication fault Alsafe 2	DINT	10	
555	PAR_DINT[555]		DelayTimeAlarm 143// Communication fault Alsafe 3	DINT	10	
556	PAR_DINT[556]		DelayTimeAlarm 144// Steam barrier low AFM 1	DINT	5	
557	PAR_DINT[557]		DelayTimeAlarm 145// Steam barrier low AFM 2	DINT	5	
558	PAR_DINT[558]		DelayTimeAlarm 146 // Steam barrier low AFM 3	DINT	5	
559	PAR_DINT[559]		DelayTimeAlarm 147 // Steam barrier low AFM 4	DINT	5	

Rev.	Date/ Sign.	Description

Tetra Therm Aseptic VTIS
T5844130774
Parameter list

Doc.type:

Dept.	Design/Drawn	Template doc. rev.	Date	Revision
BU DBF	**TOJ/**	**1.00.30**	**2016-09-28**	**-**

Tetra Pak
LUND **SWEDEN**
PLCP5844130774

This document and its content are our exclusive property and must not be copied, reproduced, transmitted or communicated to any other party or used for purposes not expressly permitted by us. Only to the extent expressly agreed by us this document may constitute a contractual obligation on our part.

Program parameter list.

Reg. No	Address	Symbol	Description	Unit:	Original	Changed
560	PAR_DINT[560]		DelayTimeAlarm 148 // Steam barrier low Alsafe 1	DINT	5	
561	PAR_DINT[561]		DelayTimeAlarm 149 // Steam barrier low Alsafe 2	DINT	5	
562	PAR_DINT[562]		DelayTimeAlarm 150 // Steam barrier low Alsafe 3	DINT	5	
563	PAR_DINT[563]		DelayTimeAlarm 151 // Spare	DINT	0	
564	PAR_DINT[564]		DelayTimeAlarm 152 // Spare	DINT	0	
565	PAR_DINT[565]		DelayTimeAlarm 153 // TT305 Broken	DINT	5	
566	PAR_DINT[566]		DelayTimeAlarm 154 // Pre ster temp fault TSL305	DINT	0	
567	PAR_DINT[567]		DelayTimeAlarm 155 // TT308 Broken	DINT	5	
568	PAR_DINT[568]		DelayTimeAlarm 156 // Pre ster temp fault TSL308	DINT	0	
569	PAR_DINT[569]		DelayTimeAlarm 157 // TT339 Broken	DINT	5	
570	PAR_DINT[570]		DelayTimeAlarm 158 // Pre ster temp fault TSL339	DINT	0	
571	PAR_DINT[571]		DelayTimeAlarm 159 // TT340 Broken	DINT	5	
572	PAR_DINT[572]		DelayTimeAlarm 160 // Pre ster temp fault TSL340	DINT	0	
573	PAR_DINT[573]		DelayTimeAlarm 161 // TT341 Broken	DINT	5	
574	PAR_DINT[574]		DelayTimeAlarm 162 // Pre ster temp fault TSL341	DINT	0	
575	PAR_DINT[575]		DelayTimeAlarm 163 // TT346 Broken	DINT	5	
576	PAR_DINT[576]		DelayTimeAlarm 164 // Pre ster temp fault TSL346	DINT	0	
577	PAR_DINT[577]		DelayTimeAlarm 165 // TT347 Broken	DINT	5	
578	PAR_DINT[578]		DelayTimeAlarm 166 // Pre ster temp fault TSL347	DINT	0	
579	PAR_DINT[579]		DelayTimeAlarm 167 // PT61A Broken	DINT	5	
580	PAR_DINT[580]		DelayTimeAlarm 168 // PT62A Broken	DINT	5	
581	PAR_DINT[581]		DelayTimeAlarm 169 // PT63A Broken	DINT	5	
582	PAR_DINT[582]		DelayTimeAlarm 170 // PT64A Broken	DINT	5	
583	PAR_DINT[583]		DelayTimeAlarm 171 // PT65A Broken	DINT	5	
584	PAR_DINT[584]		DelayTimeAlarm 172 // PT67A Broken	DINT	5	
585	PAR_DINT[585]		DelayTimeAlarm 173 // PSH500	DINT	5	
586	PAR_DINT[586]		DelayTimeAlarm 174 // Spare	DINT	0	
587	PAR_DINT[587]		DelayTimeAlarm 175 // spare	DINT	0	
588	PAR_DINT[588]		DelayTimeAlarm 176 // Low air pressure to control panel PSL301	DINT	5	
589	PAR_DINT[589]		DelayTimeAlarm 177 // TT319 Broken	DINT	5	
590	PAR_DINT[590]		DelayTimeAlarm 178 // Pre ster temp fault TSL319	DINT	0	
591	PAR_DINT[591]		DelayTimeAlarm 179 // TT381 broken	DINT	5	
592	PAR_DINT[592]		DelayTimeAlarm 180 // Fuse fault (Not used, constant 0 for safety)	DINT	0	
593	PAR_DINT[593]		DelayTimeAlarm 181 // TT951 broken	DINT	5	
594	PAR_DINT[594]		Recipe Dowload Wdog AlrDly //	DINT	0	

Rev.	Date/ Sign.	Description

Tetra Therm Aseptic VTIS
T5844130774
Parameter list

Doc.type:

Dept.	Design/Drawn	Template doc. rev.	Date	Revision
BU DBF	**TOJ/**	**1.00.30**	**2016-09-28**	**-**

Tetra Pak
LUND **SWEDEN**
PLCP5844130774

This document and its content are our exclusive property and must not be copied, reproduced, transmitted or communicated to any other party or used for purposes not expressly permitted by us. Only to the extent expressly agreed by us this document may constitute a contractual obligation on our part.

Program parameter list.

Reg. No	Address	Symbol	Description	Unit:	Original	Changed
595	PAR_DINT[595]		NO AFM in UI // Numbers of AFM in plant	DINT	10	
596	PAR_DINT[596]		NO Alsafe in UI // Numbers of Alsafes in plant	DINT	5	
597	PAR_DINT[597]		NO CAP in UI // Numbers of Capacitys in plant	DINT	0	
598	PAR_DINT[598]		SPARE //	DINT	0	
599	PAR_DINT[599]		SPARE //	DINT	5	
600	PAR_DINT[600]		NO AFM in UI // Numbers of AFM in plant	DINT	5	
601	PAR_DINT[601]		CONFIG WORD 1	DINT	0	
602	PAR_DINT[602]		CONFIG WORD 2	DINT	0	
603	PAR_DINT[603]		CONFIG WORD 3	DINT	60	
604	PAR_DINT[604]		CONFIG WORD 4	DINT	10	
605	PAR_DINT[605]		CONFIG WORD 5	DINT	5	
606	PAR_DINT[606]		CONFIG WORD 6	DINT	5	
607	PAR_DINT[607]		CONFIG WORD 7	DINT	5	
608	PAR_DINT[608]		CONFIG WORD 8	DINT	10	
609	PAR_DINT[609]		CONFIG WORD 9	DINT	10	
610	PAR_DINT[610]		CONFIG WORD 10	DINT	10	
611	PAR_DINT[611]		CONFIG WORD 11	DINT	5	
612	PAR_DINT[612]		CONFIG WORD 12	DINT	5	
613	PAR_DINT[613]		CONFIG WORD 13	DINT	0	
614	PAR_DINT[614]		CONFIG WORD 14	DINT	0	
615	PAR_DINT[615]		CONFIG WORD 15	DINT	0	
616	PAR_DINT[616]		CONFIG WORD 16	DINT	0	
617	PAR_DINT[617]		CONFIG WORD 17	DINT	0	
618	PAR_DINT[618]		CONFIG WORD 18	DINT	0	
619	PAR_DINT[619]		CONFIG WORD 19	DINT	0	
620	PAR_DINT[620]		CONFIG WORD 20	DINT	60	
621	PAR_DINT[621]		CONFIG WORD 21	DINT	5	
622	PAR_DINT[622]		CONFIG WORD 22	DINT	0	
623	PAR_DINT[623]		CONFIG WORD 23	DINT	0	
624	PAR_DINT[624]		CONFIG WORD 24	DINT	0	
625	PAR_DINT[625]		CONFIG WORD 25	DINT	0	
626	PAR_DINT[626]		CONFIG WORD 26	DINT	0	
627	PAR_DINT[627]		CONFIG WORD 27	DINT	60	
628	PAR_DINT[628]		CONFIG WORD 28	DINT	5	
629	PAR_DINT[629]		SPARE //	DINT	5	

Rev.	Date/ Sign.	Description

Tetra Therm Aseptic VTIS
T5844130774
Parameter list

Doc.type:

Dept.	Design/Drawn	Template doc. rev.	Date	Revision
BU DBF	**TOJ/**	**1.00.30**	**2016-09-28**	**-**

Tetra Pak
LUND **SWEDEN**
PLCP5844130774

This document and its content are our exclusive property and must not be copied, reproduced, transmitted or communicated to any other party or used for purposes not expressly permitted by us. Only to the extent expressly agreed by us this document may constitute a contractual obligation on our part.

Program parameter list.

Reg. No	Address	Symbol	Description	Unit:	Original	Changed
630	PAR_DINT[630]		SPARE //	DINT	5	
631	PAR_DINT[631]		SPARE //	DINT	5	
632	PAR_DINT[632]		SPARE //	DINT	5	
633	PAR_DINT[633]		Access code time // time for access code s	DINT	5	
634	PAR_DINT[634]		SPARE //	DINT	10	
635	PAR_DINT[635]		SPARE //	DINT	10	
636	PAR_DINT[636]		US CIP Rinse Sequences // Number of times to repeat	DINT	10	
637	PAR_DINT[637]		US CIP Circulation Sequences // Number of times to repeat	DINT	10	
638	PAR_DINT[638]		SPARE //	DINT	10	
639	PAR_DINT[639]		SPARE //	DINT	10	
640	PAR_DINT[640]		SPARE //	DINT	10	
641	PAR_DINT[641]		SPARE //	DINT	10	
642	PAR_DINT[642]		SPARE //	DINT	0	
643	PAR_DINT[643]		SPARE //	DINT	0	
644	PAR_DINT[644]		STEP_900 // STEP 900 Idle	DINT	0	
645	PAR_DINT[645]		STEP_901 // STEP 901 Forward Circ. V76 to Drain	DINT	0	
646	PAR_DINT[646]		STEP_902 // STEP 902 Forward Circ. Inlet	DINT	0	
647	PAR_DINT[647]		STEP_903 // STEP 903 Divert Circ. Inlet Act V70 to BTD	DINT	0	
648	PAR_DINT[648]		STEP_904 // STEP 904 Divert Circ. V79 to Drain	DINT	0	
649	PAR_DINT[649]		STEP_905 // STEP 905 Divert Circ. Inlet	DINT	0	
650	PAR_DINT[650]		STEP_906 // STEP 906 Forward Circ. to Drain through V71.2	DINT	0	
651	PAR_DINT[651]		STEP_907 // STEP 907 Forward Circ. V100 Tank Flip	DINT	5	
652	PAR_DINT[652]		STEP_908 // STEP 908 SPARE	DINT	0	
653	PAR_DINT[653]		STEP_909 // STEP 909 SPARE	DINT	0	
654	PAR_DINT[654]		STEP_910 // STEP 910 SPARE	DINT	0	
655	PAR_DINT[655]		SPARE //	DINT	0	
656	PAR_DINT[656]		SPARE //	DINT	0	
657	PAR_DINT[657]		SPARE //	DINT	0	
658	PAR_DINT[658]		SPARE //	DINT	0	
659	PAR_DINT[659]		STEP_800 // STEP 800 Idle	DINT	0	
660	PAR_DINT[660]		STEP_801 // STEP 801 Forward Rinse Act V75 to BTD, Flush V13.1	DINT	5	
661	PAR_DINT[661]		STEP_802 // STEP 802 Forward Rinse V76 to Drain, act V15.2	DINT	5	
662	PAR_DINT[662]		STEP_803 // STEP 803 Forward Rinse to drain via V15	DINT	240	
663	PAR_DINT[663]		STEP_804 // STEP 804 Divert Rinse V79 to Drain	DINT	5	
664	PAR_DINT[664]		STEP_805 // STEP 805 Divert Rinse V70 to BTD	DINT	5	

Rev.	Date/ Sign.	Description

Tetra Therm Aseptic VTIS
T5844130774
Parameter list

Tetra Pak
LUND **SWEDEN**

Doc.type:					
Dept.	Design/Drawn	Template doc. rev.	Date	Revision	
BU DBF	**TOJ/**	**1.00.30**	**2016-09-28**	**-**	**PLCP5844130774**

This document and its content are our exclusive property and must not be copied, reproduced, transmitted or communicated to any other party or used for purposes not expressly permitted by us. Only to the extent expressly agreed by us this document may constitute a contractual obligation on our part.

Program parameter list.

Reg. No	Address	Symbol	Description	Unit:	Original	Changed
665	PAR_DINT[665]		STEP_806 // STEP 806 Divert Rinse V79 to Drain	DINT	5	
666	PAR_DINT[666]		STEP_807 // STEP 807 Divert Rinse to Drain via V15	DINT	120	
667	PAR_DINT[667]		STEP_808 // STEP 808 DIVERT RINSE ACT V15 THROUGH ESL Only	DINT	5	
668	PAR_DINT[668]		STEP_809 // STEP 809 Forward Rinse to Drain via V15.2	DINT	5	
669	PAR_DINT[669]		STEP_810 // STEP 810 Forward Rinse V100 Tank Flip	DINT	0	
670	PAR_DINT[670]		SPARE //	DINT	0	
671	PAR_DINT[671]		SPARE //	DINT	0	
672	PAR_DINT[672]		SPARE //	DINT	0	
673	PAR_DINT[673]		SPARE //	DINT	0	
674	PAR_DINT[674]		SPARE //	DINT	0	
675	PAR_DINT[675]		SPARE //	DINT	0	
676	PAR_DINT[676]		SPARE //	DINT	0	
677	PAR_DINT[677]		SPARE //	DINT	0	
678	PAR_DINT[678]		SPARE //	DINT	0	
679	PAR_DINT[679]		SPARE //	DINT	0	
680	PAR_DINT[680]		SPARE //	DINT	0	
681	PAR_DINT[681]		SPARE //	DINT	0	
682	PAR_DINT[682]		SPARE //	DINT	0	
683	PAR_DINT[683]		SPARE //	DINT	0	
684	PAR_DINT[684]		SPARE //	DINT	0	
685	PAR_DINT[685]		SPARE //	DINT	0	
686	PAR_DINT[686]		SPARE //	DINT	0	
687	PAR_DINT[687]		SPARE //	DINT	0	
688	PAR_DINT[688]		SPARE //	DINT	0	
689	PAR_DINT[689]		SPARE //	DINT	0	
690	PAR_DINT[690]		SPARE //	DINT	0	
691	PAR_DINT[691]		SPARE //	DINT	0	
692	PAR_DINT[692]		SPARE //	DINT	0	
693	PAR_DINT[693]		SPARE //	DINT	0	
694	PAR_DINT[694]		SPARE //	DINT	0	
695	PAR_DINT[695]		SPARE //	DINT	0	
696	PAR_DINT[696]		SPARE //	DINT	0	
697	PAR_DINT[697]		SPARE //	DINT	0	
698	PAR_DINT[698]		SPARE //	DINT	0	
699	PAR_DINT[699]		SPARE //	DINT	0	

Rev.	Date/ Sign.	Description

Tetra Therm Aseptic VTIS
T5844130774
Parameter list

Tetra Pak
LUND **SWEDEN**

Doc.type:					
Dept.	Design/Drawn	Template doc. rev.	Date	Revision	
BU DBF	**TOJ/**	**1.00.30**	**2016-09-28**	**-**	**PLCP5844130774**

This document and its content are our exclusive property and must not be copied, reproduced, transmitted or communicated to any other party or used for purposes not expressly permitted by us. Only to the extent expressly agreed by us this document may constitute a contractual obligation on our part.

Program parameter list.

Reg. No	Address	Symbol	Description	Unit:	Original	Changed
700	PAR_DINT[700]		DelayTimeAlarm 182 // Pre ster temp fault TSL951	DINT	5	
701	PAR_DINT[701]		DelayTimeAlarm 183 // High outlet temp - TSH6	DINT	10	
702	PAR_DINT[702]		DelayTimeAlarm 184 // Pressure fault - PSL827	DINT	5	
703	PAR_DINT[703]		DelayTimeAlarm 185 // LSL11	DINT	0	
704	PAR_DINT[704]		DelayTimeAlarm 186 // LSL22	DINT	0	
705	PAR_DINT[705]		DelayTimeAlarm 187 // TSH11	DINT	5	
706	PAR_DINT[706]		DelayTimeAlarm 188 // TT11 broken	DINT	5	
707	PAR_DINT[707]		DelayTimeAlarm 189 // Air filling interrupted - LSL901 not reached in damper D901	DINT	0	
708	PAR_DINT[708]		DelayTimeAlarm 190 // Air filling interrupted - LSL902 not reached in damper D902	DINT	0	
709	PAR_DINT[709]		DelayTimeAlarm 191 // High level in damper D901	DINT	18000	
710	PAR_DINT[710]		DelayTimeAlarm 192 // Communication fault Alfast - Onestep	DINT	0	
711	PAR_DINT[711]		DelayTimeAlarm 193 // Servere fault Alfast with no action - Onestep	DINT	0	
712	PAR_DINT[712]		DelayTimeAlarm 194 // Servere fault Alfast with action - Onestep	DINT	0	
713	PAR_DINT[713]		DelayTimeAlarm 195 // Any fault Alfast - Onestep	DINT	0	
714	PAR_DINT[714]		DelayTimeAlarm 196 // Communication fault Separator - Onestep	DINT	0	
715	PAR_DINT[715]		DelayTimeAlarm 197 // Any fault Separator - Onestep	DINT	0	
716	PAR_DINT[716]		DelayTimeAlarm 198 // Speed fault Separator - Onestep	DINT	0	
717	PAR_DINT[717]		DelayTimeAlarm 199 // Low level product BTD 03 - Onestep	DINT	0	
718	PAR_DINT[718]		DelayTimeAlarm 200 // Cream destination not ready - Onestep	DINT	0	
719	PAR_DINT[719]		DelayTimeAlarm 201 // Fat content not achieved in Alsafe - Onestep	DINT	0	
720	PAR_DINT[720]		DelayTimeAlarm 202 // Spare - Onestep_Flex 1	DINT	0	
721	PAR_DINT[721]		DelayTimeAlarm 203 // Spare - Onestep_Flex 1	DINT	0	
722	PAR_DINT[722]		DelayTimeAlarm 204 // Spare - Onestep_Flex 1	DINT	0	
723	PAR_DINT[723]		DelayTimeAlarm 205 // Open valve V63 - Flex 1	DINT	0	
724	PAR_DINT[724]		DelayTimeAlarm 206 // Close valve V63 - Flex 1	DINT	0	
725	PAR_DINT[725]		DelayTimeAlarm 207 // Adjust valve V26 - Flex 1	DINT	0	
726	PAR_DINT[726]		DelayTimeAlarm 208 // High level in damper D902	DINT	18000	
727	PAR_DINT[727]		DelayTimeAlarm 209 // Pressure fault - PSH827	DINT	5	
728	PAR_DINT[728]		DelayTimeAlarm 210 // Spare Aldose	DINT	0	
729	PAR_DINT[729]		DelayTimeAlarm 211 // Spare Aldose	DINT	0	
730	PAR_DINT[730]		DelayTimeAlarm 212 // Spare Aldose	DINT	0	
731	PAR_DINT[731]		DelayTimeAlarm 213 // Commercial Power fault	DINT	0	
732	PAR_DINT[732]		DelayTimeAlarm 214 //ICIP 2.0 Cleaning finished without RFL indication clean machine	DINT	0	
733	PAR_DINT[733]		DelayTimeAlarm 215 // QT78 Transmitter broken	DINT	60	
734	PAR_DINT[734]		DelayTimeAlarm 216 // DPT5 Transmitter broken	DINT	5	

Rev.	Date/ Sign.	Description

Tetra Therm Aseptic VTIS
T5844130774
Parameter list

Tetra Pak

LUND **SWEDEN**

Doc.type:					
Dept.	Design/Drawn	Template doc. rev.	Date	Revision	
BU DBF	**TOJ/**	**1.00.30**	**2016-09-28**	**-**	**PLCP5844130774**

This document and its content are our exclusive property and must not be copied, reproduced, transmitted or communicated to any other party or used for purposes not expressly permitted by us. Only to the extent expressly agreed by us this document may constitute a contractual obligation on our part.

Program parameter list.

Reg. No	Address	Symbol	Description	Unit:	Original	Changed
735	PAR_DINT[735]		DelayTimeAlarm 217 // DPT6 Transmitter broken	DINT	5	
736	PAR_DINT[736]		DelayTimeAlarm 218 // DPT8 Transmitter broken	DINT	5	
737	PAR_DINT[737]		DelayTimeAlarm 219 // DPT9 Transmitter broken	DINT	5	
738	PAR_DINT[738]		DelayTimeAlarm 220 // DPT10 Transmitter broken	DINT	5	
739	PAR_DINT[739]		DelayTimeAlarm 221 // DPT11 Transmitter broken	DINT	5	
740	PAR_DINT[740]		DelayTimeAlarm 222 // PSH13	DINT	10	
741	PAR_DINT[741]		DelayTimeAlarm 223 // Communication fault AFM1	DINT	10	
742	PAR_DINT[742]		DelayTimeAlarm 224 // Communication fault AFM2	DINT	10	
743	PAR_DINT[743]		DelayTimeAlarm 225 // Communication fault AFM3	DINT	10	
744	PAR_DINT[744]		DelayTimeAlarm 226 // Communication fault AFM4	DINT	10	
745	PAR_DINT[745]		DelayTimeAlarm 227 // TT342 broken	DINT	0	
746	PAR_DINT[746]		DelayTimeAlarm 228 // TT505 broken	DINT	0	
747	PAR_DINT[747]		DelayTimeAlarm 229 //	DINT	10	
748	PAR_DINT[748]		DelayTimeAlarm 230 // High pressure PT51	DINT	0	
749	PAR_DINT[749]		DelayTimeAlarm 231 // Max pressure PT51	DINT	0	
750	PAR_DINT[750]		DelayTimeAlarm 232 // PT51 transmitter broken	DINT	10	
751	PAR_DINT[751]		DelayTimeAlarm 233 // I/O device failure (Not used, constant 0 for safety)	DINT	5	
752	PAR_DINT[752]		DelayTimeAlarm 234 // TSL44 US Preheater	DINT	2	
753	PAR_DINT[753]		DelayTimeAlarm 235 // PSL Hold Tube fault	DINT	0	
754	PAR_DINT[754]		SPARE // US	DINT	0	
755	PAR_DINT[755]		SPARE //	DINT	0	
756	PAR_DINT[756]		SPARE //	DINT	0	
757	PAR_DINT[757]		SPARE //	DINT	0	
758	PAR_DINT[758]		SPARE //	DINT	0	
759	PAR_DINT[759]		SPARE //	DINT	0	
760	PAR_DINT[760]		SPARE //	DINT	0	
761	PAR_DINT[761]		SPARE //	DINT	0	
762	PAR_DINT[762]		SPARE //	DINT	0	
763	PAR_DINT[763]		SPARE //	DINT	0	
764	PAR_DINT[764]		SPARE //	DINT	0	
765	PAR_DINT[765]		SPARE //	DINT	0	
766	PAR_DINT[766]		SPARE //	DINT	0	
767	PAR_DINT[767]		SPARE //	DINT	0	
768	PAR_DINT[768]		SPARE //	DINT	0	
769	PAR_DINT[769]		SPARE //	DINT	0	

Rev.	Date/ Sign.	Description

Tetra Therm Aseptic VTIS
T5844130774
Parameter list

Doc.type:

Dept.	Design/Drawn	Template doc. rev.	Date	Revision
BU DBF	**TOJ/**	**1.00.30**	**2016-09-28**	**-**

Tetra Pak
LUND **SWEDEN**
PLCP5844130774

This document and its content are our exclusive property and must not be copied, reproduced, transmitted or communicated to any other party or used for purposes not expressly permitted by us. Only to the extent expressly agreed by us this document may constitute a contractual obligation on our part.

Program parameter list.

Reg. No	Address	Symbol	Description	Unit:	Original	Changed
770	PAR_DINT[770]		SPARE //	DINT	0	
771	PAR_DINT[771]		SPARE //	DINT	0	
772	PAR_DINT[772]		SPARE //	DINT	0	
773	PAR_DINT[773]		SPARE //	DINT	0	
774	PAR_DINT[774]		SPARE //	DINT	0	
775	PAR_DINT[775]		SPARE //	DINT	0	
776	PAR_DINT[776]		SPARE //	DINT	0	
777	PAR_DINT[777]		SPARE //	DINT	0	
778	PAR_DINT[778]		SPARE //	DINT	0	
779	PAR_DINT[779]		SPARE //	DINT	0	
780	PAR_DINT[780]		SPARE //	DINT	0	
781	PAR_DINT[781]		SPARE //	DINT	0	
782	PAR_DINT[782]		SPARE //	DINT	0	
783	PAR_DINT[783]		SPARE //	DINT	0	
784	PAR_DINT[784]		SPARE //	DINT	0	
785	PAR_DINT[785]		SPARE //	DINT	0	
786	PAR_DINT[786]		SPARE //	DINT	0	
787	PAR_DINT[787]		SPARE //	DINT	0	
788	PAR_DINT[788]		SPARE //	DINT	0	
789	PAR_DINT[789]		SPARE //	DINT	0	
790	PAR_DINT[790]		SPARE //	DINT	0	
791	PAR_DINT[791]		SPARE //	DINT	0	
792	PAR_DINT[792]		SPARE //	DINT	0	
793	PAR_DINT[793]		SPARE //	DINT	0	
794	PAR_DINT[794]		SPARE //	DINT	0	
795	PAR_DINT[795]		SPARE //	DINT	0	
796	PAR_DINT[796]		SPARE //	DINT	0	
797	PAR_DINT[797]		SPARE //	DINT	0	
798	PAR_DINT[798]		SPARE //	DINT	0	
799	PAR_DINT[799]		SPARE //	DINT	0	
800	PAR_DINT[800]		SPARE //	DINT	0	
801	PAR_DINT[801]		SPARE //	DINT	0	
802	PAR_DINT[802]		SPARE //	DINT	0	
803	PAR_DINT[803]		SPARE //	DINT	0	
804	PAR_DINT[804]		SPARE //	DINT	0	

Rev.	Date/ Sign.	Description

Tetra Therm Aseptic VTIS
T5844130774
Parameter list

Doc.type:

Dept.	Design/Drawn	Template doc. rev.	Date	Revision
BU DBF	**TOJ/**	**1.00.30**	**2016-09-28**	**-**

Tetra Pak
LUND **SWEDEN**
PLCP5844130774

This document and its content are our exclusive property and must not be copied, reproduced, transmitted or communicated to any other party or used for purposes not expressly permitted by us. Only to the extent expressly agreed by us this document may constitute a contractual obligation on our part.

Program parameter list.

Reg. No	Address	Symbol	Description	Unit:	Original	Changed
805	PAR_DINT[805]		SPARE //	DINT	0	
806	PAR_DINT[806]		SPARE //	DINT	0	
807	PAR_DINT[807]		SPARE //	DINT	0	
808	PAR_DINT[808]		SPARE //	DINT	0	
809	PAR_DINT[809]		SPARE //	DINT	0	
810	PAR_DINT[810]		SPARE //	DINT	0	
811	PAR_DINT[811]		SPARE //	DINT	0	
812	PAR_DINT[812]		SPARE //	DINT	0	
813	PAR_DINT[813]		SPARE //	DINT	0	
814	PAR_DINT[814]		SPARE //	DINT	0	
815	PAR_DINT[815]		SPARE //	DINT	0	
816	PAR_DINT[816]		SPARE //	DINT	0	
817	PAR_DINT[817]		SPARE //	DINT	0	
818	PAR_DINT[818]		SPARE //	DINT	0	
819	PAR_DINT[819]		SPARE //	DINT	0	
820	PAR_DINT[820]		SPARE //	DINT	0	
821	PAR_DINT[821]		SPARE //	DINT	0	
822	PAR_DINT[822]		SPARE //	DINT	0	
823	PAR_DINT[823]		SPARE //	DINT	0	
824	PAR_DINT[824]		SPARE //	DINT	0	
825	PAR_DINT[825]		SPARE //	DINT	0	
826	PAR_DINT[826]		SPARE //	DINT	0	
827	PAR_DINT[827]		SPARE //	DINT	0	
828	PAR_DINT[828]		SPARE //	DINT	0	
829	PAR_DINT[829]		SPARE //	DINT	0	
830	PAR_DINT[830]		SPARE //	DINT	0	
831	PAR_DINT[831]		SPARE //	DINT	0	
832	PAR_DINT[832]		SPARE //	DINT	0	
833	PAR_DINT[833]		SPARE //	DINT	0	
834	PAR_DINT[834]		SPARE //	DINT	0	
835	PAR_DINT[835]		SPARE //	DINT	0	
836	PAR_DINT[836]		SPARE //	DINT	0	
837	PAR_DINT[837]		SPARE //	DINT	0	
838	PAR_DINT[838]		SPARE //	DINT	0	
839	PAR_DINT[839]		SPARE //	DINT	0	

Rev.	Date/ Sign.	Description

Tetra Therm Aseptic VTIS
T5844130774
Parameter list

Tetra Pak
LUND **SWEDEN**

Doc.type:					
Dept.	Design/Drawn	Template doc. rev.	Date	Revision	
BU DBF	**TOJ/**	**1.00.30**	**2016-09-28**	**-**	**PLCP5844130774**

This document and its content are our exclusive property and must not be copied, reproduced, transmitted or communicated to any other party or used for purposes not expressly permitted by us. Only to the extent expressly agreed by us this document may constitute a contractual obligation on our part.

Program parameter list.

Reg. No	Address	Symbol	Description	Unit:	Original	Changed
840	PAR_DINT[840]		SPARE //	DINT	0	
841	PAR_DINT[841]		SPARE //	DINT	0	
842	PAR_DINT[842]		SPARE //	DINT	0	
843	PAR_DINT[843]		SPARE //	DINT	0	
844	PAR_DINT[844]		SPARE //	DINT	0	
845	PAR_DINT[845]		SPARE //	DINT	0	
846	PAR_DINT[846]		SPARE //	DINT	0	
847	PAR_DINT[847]		SPARE //	DINT	0	
848	PAR_DINT[848]		SPARE //	DINT	0	
849	PAR_DINT[849]		SPARE //	DINT	0	
850	PAR_DINT[850]		SPARE //	DINT	0	
851	PAR_DINT[851]		SPARE //	DINT	0	
852	PAR_DINT[852]		SPARE //	DINT	0	
853	PAR_DINT[853]		SPARE //	DINT	0	
854	PAR_DINT[854]		SPARE //	DINT	0	
855	PAR_DINT[855]		SPARE //	DINT	0	
856	PAR_DINT[856]		SPARE //	DINT	0	
857	PAR_DINT[857]		SPARE //	DINT	0	
858	PAR_DINT[858]		SPARE //	DINT	0	
859	PAR_DINT[859]		SPARE //	DINT	0	
860	PAR_DINT[860]		SPARE //	DINT	0	
861	PAR_DINT[861]		SPARE //	DINT	0	
862	PAR_DINT[862]		SPARE //	DINT	0	
863	PAR_DINT[863]		SPARE //	DINT	0	
864	PAR_DINT[864]		SPARE //	DINT	0	
865	PAR_DINT[865]		SPARE //	DINT	0	
866	PAR_DINT[866]		SPARE //	DINT	0	
867	PAR_DINT[867]		SPARE //	DINT	0	
868	PAR_DINT[868]		SPARE //	DINT	0	
869	PAR_DINT[869]		SPARE //	DINT	0	
870	PAR_DINT[870]		SPARE //	DINT	0	
871	PAR_DINT[871]		SPARE //	DINT	0	
872	PAR_DINT[872]		SPARE //	DINT	0	
873	PAR_DINT[873]		SPARE //	DINT	0	
874	PAR_DINT[874]		SPARE //	DINT	0	

Rev.	Date/ Sign.	Description

Tetra Therm Aseptic VTIS
T5844130774
Parameter list

Doc.type:

Dept.	Design/Drawn	Template doc. rev.	Date	Revision
BU DBF	**TOJ/**	**1.00.30**	**2016-09-28**	**-**

Tetra Pak
LUND **SWEDEN**
PLCP5844130774

This document and its content are our exclusive property and must not be copied, reproduced, transmitted or communicated to any other party or used for purposes not expressly permitted by us. Only to the extent expressly agreed by us this document may constitute a contractual obligation on our part.

Program parameter list.

Reg. No	Address	Symbol	Description	Unit:	Original	Changed
875	PAR_DINT[875]		SPARE //	DINT	0	
876	PAR_DINT[876]		SPARE //	DINT	0	
877	PAR_DINT[877]		SPARE //	DINT	0	
878	PAR_DINT[878]		SPARE //	DINT	0	
879	PAR_DINT[879]		SPARE //	DINT	0	
880	PAR_DINT[880]		SPARE //	DINT	0	
881	PAR_DINT[881]		SPARE //	DINT	0	
882	PAR_DINT[882]		SPARE //	DINT	0	
883	PAR_DINT[883]		SPARE //	DINT	0	
884	PAR_DINT[884]		SPARE //	DINT	0	
885	PAR_DINT[885]		SPARE //	DINT	0	
886	PAR_DINT[886]		SPARE //	DINT	0	
887	PAR_DINT[887]		SPARE //	DINT	0	
888	PAR_DINT[888]		SPARE //	DINT	0	
889	PAR_DINT[889]		SPARE //	DINT	0	
890	PAR_DINT[890]		SPARE //	DINT	0	
891	PAR_DINT[891]		SPARE //	DINT	0	
892	PAR_DINT[892]		SPARE //	DINT	0	
893	PAR_DINT[893]		SPARE //	DINT	0	
894	PAR_DINT[894]		SPARE //	DINT	0	
895	PAR_DINT[895]		SPARE //	DINT	0	
896	PAR_DINT[896]		SPARE //	DINT	0	
897	PAR_DINT[897]		SPARE //	DINT	0	
898	PAR_DINT[898]		SPARE //	DINT	0	
899	PAR_DINT[899]		SPARE //	DINT	0	
900	PAR_DINT[900]		SPARE //	DINT	0	
901	PAR_DINT[901]		SPARE //	DINT	0	
902	PAR_DINT[902]		SPARE //	DINT	0	
903	PAR_DINT[903]		SPARE //	DINT	0	
904	PAR_DINT[904]		SPARE //	DINT	0	
905	PAR_DINT[905]		SPARE //	DINT	0	
906	PAR_DINT[906]		SPARE //	DINT	0	
907	PAR_DINT[907]		SPARE //	DINT	0	
908	PAR_DINT[908]		SPARE //	DINT	0	
909	PAR_DINT[909]		SPARE //	DINT	0	

Rev.	Date/ Sign.	Description

Tetra Therm Aseptic VTIS
T5844130774
Parameter list

Tetra Pak
LUND **SWEDEN**

Doc.type:					
Dept.	Design/Drawn	Template doc. rev.	Date	Revision	
BU DBF	**TOJ/**	**1.00.30**	**2016-09-28**	**-**	**PLCP5844130774**

This document and its content are our exclusive property and must not be copied, reproduced, transmitted or communicated to any other party or used for purposes not expressly permitted by us. Only to the extent expressly agreed by us this document may constitute a contractual obligation on our part.

Program parameter list.

Reg. No	Address	Symbol	Description	Unit:	Original	Changed
910	PAR_DINT[910]		SPARE //	DINT	0	
911	PAR_DINT[911]		SPARE //	DINT	0	
912	PAR_DINT[912]		SPARE //	DINT	0	
913	PAR_DINT[913]		SPARE //	DINT	0	
914	PAR_DINT[914]		SPARE //	DINT	0	
915	PAR_DINT[915]		SPARE //	DINT	0	
916	PAR_DINT[916]		SPARE //	DINT	0	
917	PAR_DINT[917]		SPARE //	DINT	0	
918	PAR_DINT[918]		SPARE //	DINT	0	
919	PAR_DINT[919]		SPARE //	DINT	0	
920	PAR_DINT[920]		SPARE //	DINT	0	
921	PAR_DINT[921]		SPARE //	DINT	0	
922	PAR_DINT[922]		SPARE //	DINT	0	
923	PAR_DINT[923]		SPARE //	DINT	0	
924	PAR_DINT[924]		SPARE //	DINT	0	
925	PAR_DINT[925]		SPARE //	DINT	0	
926	PAR_DINT[926]		SPARE //	DINT	0	
927	PAR_DINT[927]		SPARE //	DINT	0	
928	PAR_DINT[928]		SPARE //	DINT	0	
929	PAR_DINT[929]		SPARE //	DINT	0	
930	PAR_DINT[930]		SPARE //	DINT	0	
931	PAR_DINT[931]		SPARE //	DINT	0	
932	PAR_DINT[932]		SPARE //	DINT	0	
933	PAR_DINT[933]		SPARE //	DINT	0	
934	PAR_DINT[934]		SPARE //	DINT	0	
935	PAR_DINT[935]		SPARE //	DINT	0	
936	PAR_DINT[936]		SPARE //	DINT	0	
937	PAR_DINT[937]		SPARE //	DINT	0	
938	PAR_DINT[938]		SPARE //	DINT	0	
939	PAR_DINT[939]		SPARE //	DINT	0	
940	PAR_DINT[940]		SPARE //	DINT	0	
941	PAR_DINT[941]		SPARE //	DINT	0	
942	PAR_DINT[942]		SPARE //	DINT	0	
943	PAR_DINT[943]		SPARE //	DINT	0	
944	PAR_DINT[944]		SPARE //	DINT	0	

Rev.	Date/ Sign.	Description

Tetra Therm Aseptic VTIS
T5844130774
Parameter list

Doc.type:

Dept.	Design/Drawn	Template doc. rev.	Date	Revision
BU DBF	**TOJ/**	**1.00.30**	**2016-09-28**	**-**

Tetra Pak
LUND **SWEDEN**
PLCP5844130774

This document and its content are our exclusive property and must not be copied, reproduced, transmitted or communicated to any other party or used for purposes not expressly permitted by us. Only to the extent expressly agreed by us this document may constitute a contractual obligation on our part.

Program parameter list.

Reg. No	Address	Symbol	Description	Unit:	Original	Changed
945	PAR_DINT[945]		SPARE //	DINT	0	
946	PAR_DINT[946]		SPARE //	DINT	0	
947	PAR_DINT[947]		SPARE //	DINT	0	
948	PAR_DINT[948]		SPARE //	DINT	0	
949	PAR_DINT[949]		SPARE //	DINT	0	
950	PAR_DINT[950]		SPARE //	DINT	0	
951	PAR_DINT[951]		SPARE //	DINT	0	
952	PAR_DINT[952]		SPARE //	DINT	0	
953	PAR_DINT[953]		SPARE //	DINT	0	
954	PAR_DINT[954]		SPARE //	DINT	0	
955	PAR_DINT[955]		SPARE //	DINT	0	
956	PAR_DINT[956]		SPARE //	DINT	0	
957	PAR_DINT[957]		SPARE //	DINT	0	
958	PAR_DINT[958]		SPARE //	DINT	0	
959	PAR_DINT[959]		SPARE //	DINT	0	
960	PAR_DINT[960]		SPARE //	DINT	0	
961	PAR_DINT[961]		SPARE //	DINT	0	
962	PAR_DINT[962]		SPARE //	DINT	0	
963	PAR_DINT[963]		SPARE //	DINT	0	
964	PAR_DINT[964]		SPARE //	DINT	0	
965	PAR_DINT[965]		SPARE //	DINT	0	
966	PAR_DINT[966]		SPARE //	DINT	0	
967	PAR_DINT[967]		SPARE //	DINT	0	
968	PAR_DINT[968]		SPARE //	DINT	0	
969	PAR_DINT[969]		SPARE //	DINT	0	
970	PAR_DINT[970]		SPARE //	DINT	0	
971	PAR_DINT[971]		SPARE //	DINT	0	
972	PAR_DINT[972]		SPARE //	DINT	0	
973	PAR_DINT[973]		SPARE //	DINT	0	
974	PAR_DINT[974]		SPARE //	DINT	0	
975	PAR_DINT[975]		SPARE //	DINT	0	
976	PAR_DINT[976]		SPARE //	DINT	0	
977	PAR_DINT[977]		SPARE //	DINT	0	
978	PAR_DINT[978]		SPARE //	DINT	0	
979	PAR_DINT[979]		SPARE //	DINT	0	

Rev.	Date/ Sign.	Description

Tetra Therm Aseptic VTIS
T5844130774
Parameter list

Tetra Pak
LUND **SWEDEN**

Doc.type:					
Dept.	Design/Drawn	Template doc. rev.	Date	Revision	
BU DBF	**TOJ/**	**1.00.30**	**2016-09-28**	**-**	**PLCP5844130774**

This document and its content are our exclusive property and must not be copied, reproduced, transmitted or communicated to any other party or used for purposes not expressly permitted by us. Only to the extent expressly agreed by us this document may constitute a contractual obligation on our part.

Program parameter list.

Reg. No	Address	Symbol	Description	Unit:	Original	Changed
980	PAR_DINT[980]		SPARE //	DINT	0	
981	PAR_DINT[981]		SPARE //	DINT	0	
982	PAR_DINT[982]		SPARE //	DINT	0	
983	PAR_DINT[983]		SPARE //	DINT	0	
984	PAR_DINT[984]		SPARE //	DINT	0	
985	PAR_DINT[985]		SPARE //	DINT	0	
986	PAR_DINT[986]		SPARE //	DINT	0	
987	PAR_DINT[987]		SPARE //	DINT	0	
988	PAR_DINT[988]		SPARE //	DINT	0	
989	PAR_DINT[989]		SPARE //	DINT	0	
990	PAR_DINT[990]		SPARE //	DINT	0	
991	PAR_DINT[991]		SPARE //	DINT	0	
992	PAR_DINT[992]		SPARE //	DINT	0	
993	PAR_DINT[993]		SPARE //	DINT	0	
994	PAR_DINT[994]		SPARE //	DINT	0	
995	PAR_DINT[995]		SPARE //	DINT	0	
996	PAR_DINT[996]		SPARE //	DINT	0	
997	PAR_DINT[997]		SPARE //	DINT	0	
998	PAR_DINT[998]		SPARE //	DINT	0	
999	PAR_DINT[999]		SPARE //	DINT	0	

Rev.	Date/ Sign.	Description

Tetra Therm Aseptic VTIS
T5844130774
Parameter list

Doc.type:

Dept.	Design/Drawn	Template doc. rev.	Date	Revision
BU DBF	**TOJ/**	**1.00.30**	**2016-09-28**	**-**

Tetra Pak
LUND **SWEDEN**
PLCP5844130774

This document and its content are our exclusive property and must not be copied, reproduced, transmitted or communicated to any other party or used for purposes not expressly permitted by us. Only to the extent expressly agreed by us this document may constitute a contractual obligation on our part.

Program parameter list.

Reg. No	Address	Symbol	Description	Unit:	Original	Changed
1000	PAR_REAL[0]		Spare //	REAL	70	
1001	PAR_REAL[1]		Spare //	REAL	80	
1002	PAR_REAL[2]		Spare //	REAL	70	
1003	PAR_REAL[3]		Spare //	REAL	60	
1004	PAR_REAL[4]		Spare //	REAL	50	
1005	PAR_REAL[5]		Spare //	REAL	50	
1006	PAR_REAL[6]		Spare //	REAL	50	
1007	PAR_REAL[7]		Spare //	REAL	50	
1008	PAR_REAL[8]		M2_BACKFLUSH // BACKFLUSH	REAL	50	
1009	PAR_REAL[9]		M2_SHUT_D // SHUT DOWN	REAL	80	
1010	PAR_REAL[10]		M2_H_CIP // HIGH TEMP CIP	REAL	93	
1011	PAR_REAL[11]		M2_L_CIP // LOW TEMP CIP	REAL	99	
1012	PAR_REAL[12]		M2_PRE_1_6 //	REAL	83	
1013	PAR_REAL[13]		M2_7_11 //	REAL	84	
1014	PAR_REAL[14]		M2_HIBERNATION // HIBERNATION	REAL	67	
1015	PAR_REAL[15]		M2_INC_DEC_STEP // INCREASE AND DECREASE STEP FOR SELECTION BLOCK	REAL	1	
1016	PAR_REAL[16]		Spare //	REAL	1	
1017	PAR_REAL[17]		M2_START_VALUE // START VALUE FOR RAMP BLOCK	REAL	30	
1018	PAR_REAL[18]		M2_MAX // MAX OUTPUT FOR RAMP BLOCK NOT USED IN LOGIX	REAL	100	
1019	PAR_REAL[19]		M2_MIN // MAX OUTPUT FOR RAMP BLOCK NOT USED IN LOGIX	REAL	0	
1020	PAR_REAL[20]		Spare //	REAL	90	
1021	PAR_REAL[21]		Spare //	REAL	90	
1022	PAR_REAL[22]		Spare //	REAL	80	
1023	PAR_REAL[23]		Spare //	REAL	70	
1024	PAR_REAL[24]		Spare //	REAL	60	
1025	PAR_REAL[25]		Spare //	REAL	50	
1026	PAR_REAL[26]		Spare //	REAL	50	
1027	PAR_REAL[27]		Spare //	REAL	50	
1028	PAR_REAL[28]		Spare //	REAL	50	
1029	PAR_REAL[29]		Spare //	REAL	50	
1030	PAR_REAL[30]		M4_SHUT_D //	REAL	55	
1031	PAR_REAL[31]		M4_H_CIP //	REAL	90	
1032	PAR_REAL[32]		M4_L_CIP //	REAL	90	
1033	PAR_REAL[33]		M4_PRE_1_11 //	REAL	50	
1034	PAR_REAL[34]		M4_STEP 312 //	REAL	50	

Rev.	Date/ Sign.	Description

Tetra Therm Aseptic VTIS
T5844130774
Parameter list

Doc.type:

Dept.	Design/Drawn	Template doc. rev.	Date	Revision
BU DBF	**TOJ/**	**1.00.30**	**2016-09-28**	**-**

Tetra Pak
LUND **SWEDEN**
PLCP5844130774

This document and its content are our exclusive property and must not be copied, reproduced, transmitted or communicated to any other party or used for purposes not expressly permitted by us. Only to the extent expressly agreed by us this document may constitute a contractual obligation on our part.

Program parameter list.

Reg. No	Address	Symbol	Description	Unit:	Original	Changed
1035	PAR_REAL[35]		M4_HIBERNATION // HIBERNATION	REAL	40	
1036	PAR_REAL[36]		M4_INC_DEC_STEP // INCREASE AND DECREASE STEP FOR SELECTION BLOCK	REAL	1	
1037	PAR_REAL[37]		Spare148 // INCREASE AND DECREASE STEP FOR RAMP BLOCK	REAL	1	
1038	PAR_REAL[38]		M4_START_VALUE // START VALUE FOR RAMP BLOCK	REAL	30	
1039	PAR_REAL[39]		M4_MAX // MAX OUTPUT FOR RAMP BLOCK NOT USED IN LOGIX	REAL	100	
1040	PAR_REAL[40]		M4_MIN // MAX OUTPUT FOR RAMP BLOCK NOT USED IN LOGIX	REAL	0	
1041	PAR_REAL[41]		M4_FT_BROKEN_VALUE //	REAL	54,99083	
1042	PAR_REAL[42]		QoutM2_FC04 // splitt % M2	REAL	48	
1043	PAR_REAL[43]		QoutM3_FC04 // splitt % M3	REAL	65	
1044	PAR_REAL[44]		M4_STEP 312 //Aseptic	REAL	50	
1045	PAR_REAL[45]		M4_STEP 312 //Not Aseptic	REAL	50	
1046	PAR_REAL[46]		Spare // M5	REAL	50	
1047	PAR_REAL[47]		Spare // M5	REAL	45	
1048	PAR_REAL[48]		Spare // M5	REAL	70	
1049	PAR_REAL[49]		Spare // M5	REAL	70	
1050	PAR_REAL[50]		Spare // M5	REAL	70	
1051	PAR_REAL[51]		M305_SHUT_D //	REAL	70	
1052	PAR_REAL[52]		M305_H_CIP //	REAL	75	
1053	PAR_REAL[53]		M305_L_CIP //	REAL	75	
1054	PAR_REAL[54]		M305_PRE_1_11 //	REAL	60	
1055	PAR_REAL[55]		M305_SPARE //	REAL	70	
1056	PAR_REAL[56]		M305_HIB //	REAL	60	
1057	PAR_REAL[57]		M305_INC_DEC_STEP // INCREASE AND DECREASE STEP FOR SELECTION BLOCK	REAL	1	
1058	PAR_REAL[58]		M305_Spare //	REAL	1	
1059	PAR_REAL[59]		M305_START_VALUE // START VALUE FOR RAMP BLOCK	REAL	30	
1060	PAR_REAL[60]		M305_MAX // MAX OUTPUT FOR RAMP BLOCK NOT USED IN LOGIX	REAL	100	
1061	PAR_REAL[61]		M305_MIN // MAX OUTPUT FOR RAMP BLOCK NOT USED IN LOGIX	REAL	0	
1062	PAR_REAL[62]		M305_Spare //	REAL	0	
1063	PAR_REAL[63]		M6_CAP1 //	REAL	93,74101	
1064	PAR_REAL[64]		M6_CAP2 //	REAL	55,87751	
1065	PAR_REAL[65]		M6_CAP3 //	REAL	30,55275	
1066	PAR_REAL[66]		M6_CAP4 //	REAL	28,57102	
1067	PAR_REAL[67]		M6_CAP5 //	REAL	25	
1068	PAR_REAL[68]		M6_CAP6 //	REAL	22	
1069	PAR_REAL[69]		M6_Spare //	REAL	50	

Rev.	Date/ Sign.	Description

Tetra Therm Aseptic VTIS
T5844130774
Parameter list

Tetra Pak
LUND **SWEDEN**

Doc.type:					
Dept.	Design/Drawn	Template doc. rev.	Date	Revision	
BU DBF	**TOJ/**	**1.00.30**	**2016-09-28**	**-**	**PLCP5844130774**

This document and its content are our exclusive property and must not be copied, reproduced, transmitted or communicated to any other party or used for purposes not expressly permitted by us. Only to the extent expressly agreed by us this document may constitute a contractual obligation on our part.

Program parameter list.

Reg. No	Address	Symbol	Description	Unit:	Original	Changed
1070	PAR_REAL[70]		M6_Spare //	REAL	50	
1071	PAR_REAL[71]		M6_Spare //	REAL	50	
1072	PAR_REAL[72]		M6_SHUT_D // USED IN LC306 IF CONT. IS IN MANUAL MODE. ONLY VTIS AND PLUS	REAL	80	
1073	PAR_REAL[73]		M6_H_CIP // USED IN LC306 IF CONT. IS IN MANUAL MODE. ONLY VTIS AND PLUS	REAL	50	
1074	PAR_REAL[74]		M6_L_CIP // USED IN LC306 IF CONT. IS IN MANUAL MODE. ONLY VTIS AND PLUS	REAL	90	
1075	PAR_REAL[75]		M6_STER // USED IN LC306 IF CONT. IS IN MANUAL MODE. ONLY VTIS AND PLUS	REAL	30	
1076	PAR_REAL[76]		M6_Spare //	REAL	58	
1077	PAR_REAL[77]		M6_Spare //	REAL	50	
1078	PAR_REAL[78]		M6_INC_DEC_STEP // INCREASE AND DECREASE STEP FOR SELECTION BLOCK	REAL	1	
1079	PAR_REAL[79]		M6_RAMP_STEP // INCREASE AND DECREASE STEP FOR RAMP BLOCK	REAL	0,25	
1080	PAR_REAL[80]		M6_START_VALUE // START VALUE FOR RAMP BLOCK	REAL	2	
1081	PAR_REAL[81]		M6_MAX // MAX OUTPUT FOR RAMP BLOCK NOT USED IN LOGIX	REAL	100	
1082	PAR_REAL[82]		M6_MIN // MAX OUTPUT FOR RAMP BLOCK NOT USED IN LOGIX	REAL	0	
1083	PAR_REAL[83]		M6_HIBERNATION // HIBERNATION	REAL	19,28809	
1084	PAR_REAL[84]		Spare //	REAL	0,1	
1085	PAR_REAL[85]		Spare //	REAL	3	
1086	PAR_REAL[86]		Spare //	REAL	70	
1087	PAR_REAL[87]		Spare //	REAL	60	
1088	PAR_REAL[88]		Spare //	REAL	50	
1089	PAR_REAL[89]		Spare //	REAL	50	
1090	PAR_REAL[90]		LowHWFlowRatio // Low hot water flow ratio (max expected run time <= 24h)	REAL	1,1	
1091	PAR_REAL[91]		HighHWFlowRatio // High hot water flow ratio (max expected run time > 24h)	REAL	1,2	
1092	PAR_REAL[92]		Spare //	REAL	50	
1093	PAR_REAL[93]		drymatter value // Dry Matter Ratio alarm setpoint, not in production step 29	REAL	3	
1094	PAR_REAL[94]		Spare //	REAL	90	
1095	PAR_REAL[95]		Spare //	REAL	90	
1096	PAR_REAL[96]		MaxTimeCleanMachine // Max time in production for sampling start val for iCIP (h)	REAL	0,5	
1097	PAR_REAL[97]		Spare //	REAL	50	
1098	PAR_REAL[98]		Spare //	REAL	40	
1099	PAR_REAL[99]		BTD_TimeToFill // Time to fill product BTD with some margin (s)	REAL	2	
1100	PAR_REAL[100]		BTD100_C1_Diameter // (mm)	REAL	395	
1101	PAR_REAL[101]		BTD100_C1_Height // (mm)	REAL	670	
1102	PAR_REAL[102]		BTD100_C1_ZeroOffset // (mm)	REAL	40	
1103	PAR_REAL[103]		BTD100_C2_Diameter // (mm)	REAL	0	
1104	PAR_REAL[104]		BTD100_C2_TotalHeight // Total height incl C1 (mm)	REAL	0	

Rev.	Date/ Sign.	Description

Tetra Therm Aseptic VTIS
T5844130774
Parameter list

Doc.type:

Dept.	Design/Drawn	Template doc. rev.	Date	Revision
BU DBF	**TOJ/**	**1.00.30**	**2016-09-28**	**-**

Tetra Pak
LUND **SWEDEN**
PLCP5844130774

This document and its content are our exclusive property and must not be copied, reproduced, transmitted or communicated to any other party or used for purposes not expressly permitted by us. Only to the extent expressly agreed by us this document may constitute a contractual obligation on our part.

Program parameter list.

Reg. No	Address	Symbol	Description	Unit:	Original	Changed
1105	PAR_REAL[105]		BTD100_C2_StartLevelPerc // Level at C2 bottom (%)	REAL	0	
1106	PAR_REAL[106]		BTD200_C1_Diameter // (mm)	REAL	296	
1107	PAR_REAL[107]		BTD200_C1_Height // (mm)	REAL	298	
1108	PAR_REAL[108]		BTD200_C1_ZeroOffset // (mm)	REAL	27,5	
1109	PAR_REAL[109]		BTD200_C2_Diameter // (mm)	REAL	610	
1110	PAR_REAL[110]		BTD200_C2_TotalHeight // Total height incl C1 (mm)	REAL	878	
1111	PAR_REAL[111]		BTD200_C2_StartLevelPerc // Level at C2 bottom (%)	REAL	41	
1112	PAR_REAL[112]		BTD300_C1_Diameter // (mm)	REAL	399	
1113	PAR_REAL[113]		BTD300_C1_Height // (mm)	REAL	298	
1114	PAR_REAL[114]		BTD300_C1_ZeroOffset // (mm)	REAL	27,5	
1115	PAR_REAL[115]		BTD300_C2_Diameter // (mm)	REAL	790	
1116	PAR_REAL[116]		BTD300_C2_TotalHeight // Total height incl C1 (mm)	REAL	878	
1117	PAR_REAL[117]		BTD300_C2_StartLevelPerc //	REAL	41	
1118	PAR_REAL[118]		HB125_C1_Diameter // (mm)	REAL	496	
1119	PAR_REAL[119]		HB125_C1_Height // (mm)	REAL	662	
1120	PAR_REAL[120]		HB125_C1_ZeroOffset // (mm)	REAL	0	
1121	PAR_REAL[121]		HB125_C2_Diameter // (mm)	REAL	0	
1122	PAR_REAL[122]		HB125_C2_TotalHeight // Total height incl C1 (mm)	REAL	0	
1123	PAR_REAL[123]		HB125_C2_StartLevelPerc // Level at C2 bottom (%)	REAL	0	
1124	PAR_REAL[124]		HB210_C1_Diameter // (mm)	REAL	521	
1125	PAR_REAL[125]		HB210_C1_Height // (mm)	REAL	984	
1126	PAR_REAL[126]		HB210_C1_ZeroOffset // (mm)	REAL	0	
1127	PAR_REAL[127]		HB210_C2_Diameter // (mm)	REAL	0	
1128	PAR_REAL[128]		HB210_C2_TotalHeight // Total height incl C1 (mm)	REAL	0	
1129	PAR_REAL[129]		HB210_C2_StartLevelPerc // Level at C2 bottom (%)	REAL	0	
1130	PAR_REAL[130]		BTDspare_C1_Diameter // (mm)	REAL	0	
1131	PAR_REAL[131]		BTDspare_C1_Height // (mm)	REAL	0	
1132	PAR_REAL[132]		BTDspare_C1_ZeroOffset // (mm)	REAL	0	
1133	PAR_REAL[133]		BTDspare_C2_Diameter // (mm)	REAL	0	
1134	PAR_REAL[134]		BTDspare_C2_TotalHeight // Total height incl C1 (mm)	REAL	0	
1135	PAR_REAL[135]		BTDspare_C2_StartLevelPerc //	REAL	0	
1136	PAR_REAL[136]		HBspare_C1_Diameter // (mm)	REAL	0	
1137	PAR_REAL[137]		HBspare_C1_Height // (mm)	REAL	0	
1138	PAR_REAL[138]		HBspare_C1_ZeroOffset // (mm)	REAL	0	
1139	PAR_REAL[139]		HBspare_C2_Diameter // (mm)	REAL	0	

Rev.	Date/ Sign.	Description

Tetra Therm Aseptic VTIS
T5844130774
Parameter list

Tetra Pak
LUND **SWEDEN**

Doc.type:					
Dept.	Design/Drawn	Template doc. rev.	Date	Revision	
BU DBF	**TOJ/**	**1.00.30**	**2016-09-28**	**-**	**PLCP5844130774**

This document and its content are our exclusive property and must not be copied, reproduced, transmitted or communicated to any other party or used for purposes not expressly permitted by us. Only to the extent expressly agreed by us this document may constitute a contractual obligation on our part.

Program parameter list.

Reg. No	Address	Symbol	Description	Unit:	Original	Changed
1140	PAR_REAL[140]		HBspare_C2_TotalHeight // Total height incl C1 (mm)	REAL	0	
1141	PAR_REAL[141]		HBspare_C2_StartLevelPerc // Level at C2 bottom (%)	REAL	0	
1142	PAR_REAL[142]		Spare //	REAL	1	
1143	PAR_REAL[143]		Spare //	REAL	30	
1144	PAR_REAL[144]		Spare //	REAL	100	
1145	PAR_REAL[145]		Spare //	REAL	0	
1146	PAR_REAL[146]		Spare //	REAL	0	
1147	PAR_REAL[147]		Spare //	REAL	30	
1148	PAR_REAL[148]		Spare //	REAL	50	
1149	PAR_REAL[149]		Spare //	REAL	60	
1150	PAR_REAL[150]		Spare //	REAL	60	
1151	PAR_REAL[151]		Spare // V330	REAL	50	
1152	PAR_REAL[152]		Spare // V330	REAL	50	
1153	PAR_REAL[153]		Spare // V330	REAL	50	
1154	PAR_REAL[154]		Spare // V330	REAL	50	
1155	PAR_REAL[155]		V330_H_CIP_ACID //	REAL	50	
1156	PAR_REAL[156]		V330_SHUT_D //	REAL	30	
1157	PAR_REAL[157]		V330_H_CIP //	REAL	55	
1158	PAR_REAL[158]		V330_L_CIP //	REAL	5	
1159	PAR_REAL[159]		V330_PRE_1_6 //	REAL	50	
1160	PAR_REAL[160]		V330_7_11 //	REAL	55	
1161	PAR_REAL[161]		V330_Spare //	REAL	60	
1162	PAR_REAL[162]		V330_INC_DEC_STEP // INCREASE AND DECREASE STEP FOR SELECTION BLOCK	REAL	1	
1163	PAR_REAL[163]		V330_Spare //	REAL	1	
1164	PAR_REAL[164]		V330_START_VALUE // START VALUE FOR RAMP BLOCK	REAL	0	
1165	PAR_REAL[165]		V330_MAX // MAX OUTPUT FOR RAMP BLOCK NOT USED IN LOGIX	REAL	100	
1166	PAR_REAL[166]		V330_MIN // MAX OUTPUT FOR RAMP BLOCK NOT USED IN LOGIX	REAL	0	
1167	PAR_REAL[167]		V330_Spare //	REAL	0	
1168	PAR_REAL[168]		Spare //	REAL	70	
1169	PAR_REAL[169]		Spare //	REAL	80	
1170	PAR_REAL[170]		Spare //	REAL	70	
1171	PAR_REAL[171]		Spare //	REAL	60	
1172	PAR_REAL[172]		Spare //	REAL	50	
1173	PAR_REAL[173]		Spare // V354	REAL	50	
1174	PAR_REAL[174]		Spare // V354	REAL	50	

Rev.	Date/ Sign.	Description

Tetra Therm Aseptic VTIS
T5844130774
Parameter list

Tetra Pak
LUND **SWEDEN**

Doc.type:					
Dept.	Design/Drawn	Template doc. rev.	Date	Revision	
BU DBF	**TOJ/**	**1.00.30**	**2016-09-28**	**-**	**PLCP5844130774**

This document and its content are our exclusive property and must not be copied, reproduced, transmitted or communicated to any other party or used for purposes not expressly permitted by us. Only to the extent expressly agreed by us this document may constitute a contractual obligation on our part.

Program parameter list.

Reg. No	Address	Symbol	Description	Unit:	Original	Changed
1175	PAR_REAL[175]		Spare // V354	REAL	50	
1176	PAR_REAL[176]		V354_H_CIP_ACID // Use in future as SP13 ?	REAL	50	
1177	PAR_REAL[177]		V354_SHUT_D //	REAL	45	
1178	PAR_REAL[178]		V354_H_CIP //	REAL	78	
1179	PAR_REAL[179]		V354_L_CIP //	REAL	50	
1180	PAR_REAL[180]		V354_PRE_1_6 //	REAL	85	
1181	PAR_REAL[181]		V354_7_11 //	REAL	88	
1182	PAR_REAL[182]		V354_Spare //	REAL	100	
1183	PAR_REAL[183]		V354_INC_DEC_STEP // INCREASE AND DECREASE STEP FOR SELECTION BLOCK	REAL	1	
1184	PAR_REAL[184]		V354_Spare //	REAL	1	
1185	PAR_REAL[185]		V354_START_VALUE // START VALUE FOR RAMP BLOCK	REAL	0	
1186	PAR_REAL[186]		V354_MAX // MAX OUTPUT FOR RAMP BLOCK NOT USED IN LOGIX	REAL	100	
1187	PAR_REAL[187]		V354_MIN // MAX OUTPUT FOR RAMP BLOCK NOT USED IN LOGIX	REAL	0	
1188	PAR_REAL[188]		V354_Spare //	REAL	0	
1189	PAR_REAL[189]		V362_Spare //	REAL	39	
1190	PAR_REAL[190]		V362_Spare //	REAL	40	
1191	PAR_REAL[191]		V362_Spare //	REAL	45	
1192	PAR_REAL[192]		V362_Spare //	REAL	50	
1193	PAR_REAL[193]		V362_Spare //	REAL	40	
1194	PAR_REAL[194]		V362_Spare //	REAL	40	
1195	PAR_REAL[195]		V362_Spare //	REAL	0	
1196	PAR_REAL[196]		V362_Step4 //	REAL	50	
1197	PAR_REAL[197]		V362_DosRinseLTCIP //	REAL	10	
1198	PAR_REAL[198]		V362_SHUT_D //	REAL	20	
1199	PAR_REAL[199]		V362_H_CIP //	REAL	35	
1200	PAR_REAL[200]		V362_L_CIP //	REAL	20	
1201	PAR_REAL[201]		V362_PRE_1_6 //	REAL	25	
1202	PAR_REAL[202]		V362_7_11 //	REAL	20	
1203	PAR_REAL[203]		V362_HIB // HIB	REAL	25	
1204	PAR_REAL[204]		V362_INC_DEC_STEP // INCREASE AND DECREASE STEP FOR SELECTION BLOCK	REAL	1	
1205	PAR_REAL[205]		V362_Spare //	REAL	1	
1206	PAR_REAL[206]		V362_START_VALUE // START VALUE FOR RAMP BLOCK	REAL	0	
1207	PAR_REAL[207]		V362_MAX // MAX OUTPUT FOR RAMP BLOCK NOT USED IN LOGIX	REAL	100	
1208	PAR_REAL[208]		V362_MIN // MAX OUTPUT FOR RAMP BLOCK NOT USED IN LOGIX	REAL	0	
1209	PAR_REAL[209]		V362_Spare //	REAL	0	

Rev.	Date/ Sign.	Description

Tetra Therm Aseptic VTIS
T5844130774
Parameter list

Doc.type:

Dept.	Design/Drawn	Template doc. rev.	Date	Revision
BU DBF	**TOJ/**	**1.00.30**	**2016-09-28**	**-**

Tetra Pak
LUND **SWEDEN**
PLCP5844130774

This document and its content are our exclusive property and must not be copied, reproduced, transmitted or communicated to any other party or used for purposes not expressly permitted by us. Only to the extent expressly agreed by us this document may constitute a contractual obligation on our part.

Program parameter list.

Reg. No	Address	Symbol	Description	Unit:	Original	Changed
1210	PAR_REAL[210]		V65_CAP1 //	REAL	66	
1211	PAR_REAL[211]		V65_CAP2 //	REAL	43	
1212	PAR_REAL[212]		V65_CAP3 //	REAL	70	
1213	PAR_REAL[213]		V65_CAP4 //	REAL	70	
1214	PAR_REAL[214]		V65_CAP5 //	REAL	70	
1215	PAR_REAL[215]		V65_CAP6 //	REAL	70	
1216	PAR_REAL[216]		V65_Spare //	REAL	70	
1217	PAR_REAL[217]		V65_Spare //	REAL	70	
1218	PAR_REAL[218]		V65_Spare //	REAL	70	
1219	PAR_REAL[219]		V65_SHUT_D //	REAL	70	
1220	PAR_REAL[220]		V65_H_CIP //	REAL	75	
1221	PAR_REAL[221]		V65_L_CIP //	REAL	75	
1222	PAR_REAL[222]		V65_PRE_1_6 //	REAL	45	
1223	PAR_REAL[223]		V65_7_11 //	REAL	70	
1224	PAR_REAL[224]		V65_SPARE_1 //	REAL	66	
1225	PAR_REAL[225]		V65_INC_DEC_STEP // INCREASE AND DECREASE STEP FOR SELECTION BLOCK	REAL	1	
1226	PAR_REAL[226]		V65_RAMP_STEP // INCREASE AND DECREASE STEP FOR RAMP BLOCK	REAL	1	
1227	PAR_REAL[227]		V65_START_VALUE // START VALUE FOR RAMP BLOCK	REAL	0	
1228	PAR_REAL[228]		V65_MAX // MAX OUTPUT FOR RAMP BLOCK NOT USED IN LOGIX	REAL	100	
1229	PAR_REAL[229]		V65_MIN // MAX OUTPUT FOR RAMP BLOCK NOT USED IN LOGIX	REAL	0	
1230	PAR_REAL[230]		V65_Spare //	REAL	0	
1231	PAR_REAL[231]		Spare //	REAL	50	
1232	PAR_REAL[232]		Spare //	REAL	50	
1233	PAR_REAL[233]		Spare //	REAL	50	
1234	PAR_REAL[234]		Spare //	REAL	50	
1235	PAR_REAL[235]		Spare //	REAL	50	
1236	PAR_REAL[236]		Spare //	REAL	50	
1237	PAR_REAL[237]		Spare //	REAL	50	
1238	PAR_REAL[238]		Spare //	REAL	50	
1239	PAR_REAL[239]		Spare //	REAL	50	
1240	PAR_REAL[240]		V540_SHUT_D //	REAL	50	
1241	PAR_REAL[241]		V540_H_CIP //	REAL	50	
1242	PAR_REAL[242]		V540_L_CIP //	REAL	50	
1243	PAR_REAL[243]		V540_PRE_1_6 //	REAL	50	
1244	PAR_REAL[244]		V540_7_11 //	REAL	50	

Rev.	Date/ Sign.	Description

Tetra Therm Aseptic VTIS
T5844130774
Parameter list

Doc.type:

Dept.	Design/Drawn	Template doc. rev.	Date	Revision
BU DBF	**TOJ/**	**1.00.30**	**2016-09-28**	**-**

Tetra Pak
LUND **SWEDEN**
PLCP5844130774

This document and its content are our exclusive property and must not be copied, reproduced, transmitted or communicated to any other party or used for purposes not expressly permitted by us. Only to the extent expressly agreed by us this document may constitute a contractual obligation on our part.

Program parameter list.

Reg. No	Address	Symbol	Description	Unit:	Original	Changed
1245	PAR_REAL[245]		V540_HIBERNATION //	REAL	35	
1246	PAR_REAL[246]		V540_INC_DEC_STEP // INCREASE AND DECREASE STEP FOR SELECTION BLOCK	REAL	1	
1247	PAR_REAL[247]		V540_Spare //	REAL	1	
1248	PAR_REAL[248]		V540_START_VALUE // START VALUE FOR RAMP BLOCK	REAL	0	
1249	PAR_REAL[249]		V540_MAX // MAX OUTPUT FOR RAMP BLOCK NOT USED IN LOGIX	REAL	100	
1250	PAR_REAL[250]		V540_MIN // MAX OUTPUT FOR RAMP BLOCK NOT USED IN LOGIX	REAL	0	
1251	PAR_REAL[251]		V540_SPARE_2 //	REAL	0	
1252	PAR_REAL[252]		V97_SP1 //	REAL	0	
1253	PAR_REAL[253]		V97_SP2 //	REAL	51	
1254	PAR_REAL[254]		V97_SP3 //	REAL	76	
1255	PAR_REAL[255]		V97_SP4 //	REAL	100	
1256	PAR_REAL[256]		V97_SP5 //	REAL	70	
1257	PAR_REAL[257]		V97_SP6 //	REAL	70	
1258	PAR_REAL[258]		V97_SP7 //	REAL	70	
1259	PAR_REAL[259]		V97_SP8 //	REAL	70	
1260	PAR_REAL[260]		V97_SP9 //	REAL	70	
1261	PAR_REAL[261]		V97_SHUT_D //	REAL	70	
1262	PAR_REAL[262]		V97_H_CIP //	REAL	0	
1263	PAR_REAL[263]		V97_L_CIP //	REAL	70	
1264	PAR_REAL[264]		V97_Spare //	REAL	70	
1265	PAR_REAL[265]		V97_Spare //	REAL	70	
1266	PAR_REAL[266]		V97_Spare //	REAL	70	
1267	PAR_REAL[267]		V97_INC_DEC_STEP // INCREASE AND DECREASE STEP FOR SELECTION BLOCK	REAL	1	
1268	PAR_REAL[268]		V97_RAMP_STEP_FAST // INCREASE AND DECREASE STEP FOR RAMP BLOCK	REAL	1	
1269	PAR_REAL[269]		V97_START_VALUE // START VALUE FOR RAMP BLOCK	REAL	0	
1270	PAR_REAL[270]		V97_MAX // MAX OUTPUT FOR RAMP BLOCK NOT USED IN LOGIX	REAL	100	
1271	PAR_REAL[271]		V97_MIN // MAX OUTPUT FOR RAMP BLOCK NOT USED IN LOGIX	REAL	0	
1272	PAR_REAL[272]		V97_RAMP_STEP_SLOW //	REAL	0,5	
1273	PAR_REAL[273]		Spare //	REAL	35	
1274	PAR_REAL[274]		Spare //	REAL	50	
1275	PAR_REAL[275]		Spare //	REAL	40	
1276	PAR_REAL[276]		Spare //	REAL	25	
1277	PAR_REAL[277]		Spare //	REAL	40	
1278	PAR_REAL[278]		Spare //	REAL	30	
1279	PAR_REAL[279]		Spare //	REAL	30	

Rev.	Date/ Sign.	Description

Tetra Therm Aseptic VTIS
T5844130774
Parameter list

Tetra Pak
LUND **SWEDEN**

Doc.type:					
Dept.	Design/Drawn	Template doc. rev.	Date	Revision	
BU DBF	**TOJ/**	**1.00.30**	**2016-09-28**	**-**	**PLCP5844130774**

This document and its content are our exclusive property and must not be copied, reproduced, transmitted or communicated to any other party or used for purposes not expressly permitted by us. Only to the extent expressly agreed by us this document may constitute a contractual obligation on our part.

Program parameter list.

Reg. No	Address	Symbol	Description	Unit:	Original	Changed
1280	PAR_REAL[280]		Spare //	REAL	30	
1281	PAR_REAL[281]		Spare //	REAL	30	
1282	PAR_REAL[282]		Spare //	REAL	4	
1283	PAR_REAL[283]		CIPHB_LL_SP // CIP HB low level setpoint	REAL	0,5	
1284	PAR_REAL[284]		CIPHB_LL_SP_st25_26 // Calculated SP used in step 25_26	REAL	8,333333	
1285	PAR_REAL[285]		CIPHB_HYST // Old CIP HB hysteresis %	REAL	5	
1286	PAR_REAL[286]		Spare //	REAL	50	
1287	PAR_REAL[287]		Spare //	REAL	1	
1288	PAR_REAL[288]		Spare //	REAL	10	
1289	PAR_REAL[289]		Spare //	REAL	10	
1290	PAR_REAL[290]		Spare //	REAL	10	
1291	PAR_REAL[291]		INITIAL_RAMP_TC49 // ADJUSTABLE INITIAL RAMP FOR TIC49	REAL	10	
1292	PAR_REAL[292]		INITIAL_RAMP_TC50// ADJUSTABLE INITIAL RAMP FOR TIC50	REAL	10	
1293	PAR_REAL[293]		V29 activation in end of step in CIP rinse. Percentage of stepvolume (%)	REAL	65	
1294	PAR_REAL[294]		Spare //	REAL	45	
1295	PAR_REAL[295]		Spare //	REAL	44	
1296	PAR_REAL[296]		Spare //	REAL	50	
1297	PAR_REAL[297]		V331_PercOutActV334 //	REAL	5	
1298	PAR_REAL[298]		V331 SP step 10 // setpoint step 10	REAL	50	
1299	PAR_REAL[299]		V331 Ramp Step // increas and decreas for ramp block	REAL	0,2	
1300	PAR_REAL[300]		V331 Start Value // start value for ramp block	REAL	0	
1301	PAR_REAL[301]		V331 Max // max output for ramp blockl	REAL	100	
1302	PAR_REAL[302]		V331 Min // Min output for ramp block	REAL	0	
1303	PAR_REAL[303]		Spare //	REAL	70	
1304	PAR_REAL[304]		TC60_OUTP_STEP11 //	REAL	50	
1305	PAR_REAL[305]		WaterTankHL // Water tank high Level (l) - used in step 21	REAL	125	
1306	PAR_REAL[306]		WaterTankML // Water tank mid Level (l) - used in step 25 & 26	REAL	80	
1307	PAR_REAL[307]		Spare //	REAL	10	
1308	PAR_REAL[308]		TC381 output step 3 // Forced output TC381 in step 3	REAL	10	
1309	PAR_REAL[309]		LC8_ADD_SP_MET_DOS // Add this to SP10 in Wait for metering and Dosing	REAL	30	
1310	PAR_REAL[310]		V08_OUTP_FINAL_RINSE // Forced output to V08 in final CIP rinse steps	REAL	20	
1311	PAR_REAL[311]		SP_NHL_BTD_RESET // NOT HIGH LEVEL IN PRODUCT BTD RESET HELP BIT THAT CLOSE V14	REAL	50	
1312	PAR_REAL[312]		SP_HL_BTD_SET // HIGH LEVEL IN PRODUCT BTD SET HELP BIT THAT CLOSE V14	REAL	95	
1313	PAR_REAL[313]		SP1_LL_WAT_BTD // LOW LEVEL BTD	REAL	45	
1314	PAR_REAL[314]		S_SP2_LL_FILL_EMPTY // LOW LEVEL WHEN FILL/EMPTY	REAL	45	

Rev.	Date/ Sign.	Description

Tetra Therm Aseptic VTIS
T5844130774
Parameter list

Doc.type:

Dept.	Design/Drawn	Template doc. rev.	Date	Revision
BU DBF	**TOJ/**	**1.00.30**	**2016-09-28**	**-**

Tetra Pak
LUND **SWEDEN**
PLCP5844130774

This document and its content are our exclusive property and must not be copied, reproduced, transmitted or communicated to any other party or used for purposes not expressly permitted by us. Only to the extent expressly agreed by us this document may constitute a contractual obligation on our part.

Program parameter list.

Reg. No	Address	Symbol	Description	Unit:	Original	Changed
1315	PAR_REAL[315]		SP3_LL_CIP_BTD // LOW LEVEL WHEN CIP INTO BTD	REAL	40	
1316	PAR_REAL[316]		SP4_LL_DOSING // LOW LEVEL DOSING	REAL	105	
1317	PAR_REAL[317]		SP5_LL_LL_BTD // LOW LEVEL ALARM	REAL	10	
1318	PAR_REAL[318]		SP6_LL_SPARE_BTD // SPARE	REAL	10	
1319	PAR_REAL[319]		SP7_LL_PRODUCTION_BTD // LOW LEVEL IN PRODUCTION	REAL	35	
1320	PAR_REAL[320]		S_HYSTERES_FLOW // USED FOR DETERMINAT HIGH- OR LOW CAPACITY	REAL	25	
1321	PAR_REAL[321]		S_SWITCH_POINT_LOW_CAP // USED FOR DETERMINAT HIGH- OR LOW CAPACITY	REAL	7000	
1322	PAR_REAL[322]		Spare //	REAL	60	
1323	PAR_REAL[323]		S_SWITCH_POINT_V22_1 // Product flow	REAL	25	
1324	PAR_REAL[324]		S_SWITCH_POINT_V22_2 // Product flow	REAL	25	
1325	PAR_REAL[325]		S_SWITCH_POINT_V22_3 // Product flow	REAL	25	
1326	PAR_REAL[326]		FLOW_DIF_VAL // HYSTERESIS FOR FLOW FAULT	REAL	2250	
1327	PAR_REAL[327]		Spare //	REAL	105	
1328	PAR_REAL[328]		Spare //	REAL	20	
1329	PAR_REAL[329]		M5_SHUT_D // SHUT DOWN	REAL	70	
1330	PAR_REAL[330]		M5_H_CIP // HIGH TEMP CIP	REAL	70	
1331	PAR_REAL[331]		M5_L_CIP // LOW TEMP CIP	REAL	70	
1332	PAR_REAL[332]		M5_PRE_1_6 //	REAL	70	
1333	PAR_REAL[333]		M5_7_11 //	REAL	70	
1334	PAR_REAL[334]		M5_HIBERNATION // HIBERNATION	REAL	70	
1335	PAR_REAL[335]		M5_INC_DEC_STEP // INCREASE AND DECREASE STEP FOR SELECTION BLOCK	REAL	1	
1336	PAR_REAL[336]		Spare //	REAL	70	
1337	PAR_REAL[337]		M5_START_VALUE // START VALUE FOR RAMP BLOCK	REAL	50	
1338	PAR_REAL[338]		M5_MAX // MAX OUTPUT FOR RAMP BLOCK NOT USED IN LOGIX	REAL	100	
1339	PAR_REAL[339]		M5_MIN // MAX OUTPUT FOR RAMP BLOCK NOT USED IN LOGIX	REAL	0	
1340	PAR_REAL[340]		M7_SHUT_D //	REAL	50	
1341	PAR_REAL[341]		M7_H_CIP //	REAL	70	
1342	PAR_REAL[342]		M7_L_CIP //	REAL	90	
1343	PAR_REAL[343]		M7_STEP_1_6 //	REAL	45	
1344	PAR_REAL[344]		M7_STEP_7_11 //	REAL	45	
1345	PAR_REAL[345]		M7_HIBERNATION //	REAL	40	
1346	PAR_REAL[346]		M7_Spare	REAL	0	
1347	PAR_REAL[347]		M7_Spare //	REAL	0	
1348	PAR_REAL[348]		M7_INC_DEC_STEP //	REAL	1	
1349	PAR_REAL[349]		Spare //	REAL	0	

Rev.	Date/ Sign.	Description

Tetra Therm Aseptic VTIS
T5844130774
Parameter list

Tetra Pak
LUND **SWEDEN**

Doc.type:					
Dept.	Design/Drawn	Template doc. rev.	Date	Revision	
BU DBF	**TOJ/**	**1.00.30**	**2016-09-28**	**-**	**PLCP5844130774**

This document and its content are our exclusive property and must not be copied, reproduced, transmitted or communicated to any other party or used for purposes not expressly permitted by us. Only to the extent expressly agreed by us this document may constitute a contractual obligation on our part.

Program parameter list.

Reg. No	Address	Symbol	Description	Unit:	Original	Changed
1350	PAR_REAL[350]		M7_START_VALUE //	REAL	40	
1351	PAR_REAL[351]		M7_MAX //	REAL	100	
1352	PAR_REAL[352]		M7_MIN //	REAL	0	
1353	PAR_REAL[353]		Spare //	REAL	0	
1354	PAR_REAL[354]		Spare //	REAL	0	
1355	PAR_REAL[355]		INITIAL_RAMP_TC43 // ADJUSTABLE INITIAL RAMP FOR TC43	REAL	0,5	
1356	PAR_REAL[356]		INITIAL_RAMP_TC344 // ADJUSTABLE INITIAL RAMP FOR TC344	REAL	0,4	
1357	PAR_REAL[357]		INITIAL_RAMP_TC60 // ADJUSTABLE INITIAL RAMP FOR TC60	REAL	0,5	
1358	PAR_REAL[358]		Spare //	REAL	0,5	
1359	PAR_REAL[359]		INITIAL_RAMP_PC330 // ADJUSTABLE INITIAL RAMP FOR PC330	REAL	1	
1360	PAR_REAL[360]		INITIAL_RAMP_TC44_VTIS // ADJUSTABLE INITIAL RAMP FOR TC44_VTIS	REAL	1	
1361	PAR_REAL[361]		INITIAL_RAMP_TC44_FLEX // ADJUSTABLE INITIAL RAMP FOR TC44_FLEX	REAL	1	
1362	PAR_REAL[362]		INITIAL_RAMP_TC544 // ADJUSTABLE INITIAL RAMP FOR TC544	REAL	0,1	
1363	PAR_REAL[363]		Spare //	REAL	0,1	
1364	PAR_REAL[364]		Spare //	REAL	0,3	
1365	PAR_REAL[365]		SP_ActHiTempSterHomo // Set point value (TI71) for activation of Hi temp ster in Alex V816 / V817	REAL	100	
1366	PAR_REAL[366]		LOW_LEVEL_VC // LOW LEVEL IN VACUUM CHAMBER FOR ALLOW V344 TO OPEN.	REAL	90	
1367	PAR_REAL[367]		FC9_START_VALUE // START VALUE FOR SETPOINT RAMP BLOCK FC9	REAL	8000	
1368	PAR_REAL[368]		FC9_RAMP_STEP // INCREASE AND DECREASE STEP FOR SETPOINT RAMP BLOCK FC9	REAL	30	
1369	PAR_REAL[369]		TC344_START_VALUE // START VALUE FOR SETPOINT RAMP BLOCK TC344	REAL	80	
1370	PAR_REAL[370]		TC344_RAMP_STEP // INCREASE AND DECREASE STEP FOR SETPOINT RAMP BLOCK TC344	REAL	0,06	
1371	PAR_REAL[371]		TC544_START_VALUE // START VALUE FOR SETPOINT RAMP BLOCK TC544	REAL	80	
1372	PAR_REAL[372]		TC544_RAMP_STEP // INCREASE AND DECREASE STEP FOR SETPOINT RAMP BLOCK TC544	REAL	0,1	
1373	PAR_REAL[373]		TC44_VTIS START_VALUE // START VALUE FOR SETPOINT RAMP BLOCK TC44_VTIS	REAL	0	
1374	PAR_REAL[374]		TC44_VTIS_RAMP_STEP // INCREASE AND DECREASE STEP FOR SETPOINT RAMP BLOCK TC44_VTIS	REAL	0,5	
1375	PAR_REAL[375]		TC44_FLEX_START_VALUE // START VALUE FOR SETPOINT RAMP BLOCK TC44_FLEX	REAL	85	
1376	PAR_REAL[376]		TC44_FLEX_RAMP_STEP // INCREASE AND DECREASE STEP FOR SETPOINT RAMP BLOCK TC44_FLEX	REAL	0,1	
1377	PAR_REAL[377]		LC504_START_VALUE //	REAL	0	
1378	PAR_REAL[378]		LC504_RAMP_STEP //	REAL	1	
1379	PAR_REAL[379]		SIM_TC44_PV // SIMULATED PRE HEAT TEMP TC 44 PV (0-160,0°C)	REAL	80	
1380	PAR_REAL[380]		SIM_TC_544_PV // SIMULATED STER TEMP TC 544 PV (0-160,0°C)	REAL	140	
1381	PAR_REAL[381]		SIM_BOLT_L_MES // SIMULATED BOLT L- MESUREMENT.	REAL	30	
1382	PAR_REAL[382]		SIM_CAP // CAPACITY FOR HC SIMULATION.	REAL	14000	
1383	PAR_REAL[383]		SIM_DENSITY_PROD // PRODUCT DESITY KG / L AT FLOW METER.	REAL	1,1	
1384	PAR_REAL[384]		SIM_REQ_HC_TIME // REQUESTED HC TIME FOR SIMULATION	REAL	4	

Rev.	Date/ Sign.	Description

Tetra Therm Aseptic VTIS
T5844130774
Parameter list

Doc.type:

Dept.	Design/Drawn	Template doc. rev.	Date	Revision
BU DBF	**TOJ/**	**1.00.30**	**2016-09-28**	**-**

Tetra Pak
LUND **SWEDEN**
PLCP5844130774

This document and its content are our exclusive property and must not be copied, reproduced, transmitted or communicated to any other party or used for purposes not expressly permitted by us. Only to the extent expressly agreed by us this document may constitute a contractual obligation on our part.

Program parameter list.

Reg. No	Address	Symbol	Description	Unit:	Original	Changed
1385	PAR_REAL[385]		Spare //	REAL	35	
1386	PAR_REAL[386]		Spare //	REAL	3	
1387	PAR_REAL[387]		Spare //	REAL	0	
1388	PAR_REAL[388]		Spare //	REAL	0,1	
1389	PAR_REAL[389]		Start output value for LC32	REAL	40	
1390	PAR_REAL[390]		TC381_START_VALUE // START VALUE FOR SETPOINT RAMP BLOCK TC381	REAL	0	
1391	PAR_REAL[391]		TC381_RAMP_STEP // INCREASE AND DECREASE STEP FOR SETPOINT RAMP BLOCK TC381	REAL	0,08	
1392	PAR_REAL[392]		RAMP STEP OUTPUT INITIAL RAMP AND START OF STEP 7	REAL	0,05	
1393	PAR_REAL[393]		START VALUE FOR SETPOINT RAMP BLOCK FC04	REAL	18000	
1394	PAR_REAL[394]		INCREASE AND DECREASE STEP FOR SETPOINT RAMP BLOCK FC04	REAL	15	
1395	PAR_REAL[395]		RAMP STEP OUTPUT IN END OF STEP 7	REAL	0,15	
1396	PAR_REAL[396]		INCREASE AND DECREASE STEP FOR SETPOINT RAMP BLOCK FC04 IN CIP	REAL	100	
1397	PAR_REAL[397]		INCREASE AND DECREASE STEP FOR SETPOINT RAMP BLOCK FC10S, TC08M ramping SP for TC08M Min out value, if option 72 co	REAL	40	
1398	PAR_REAL[398]		INCREASE AND DECREASE STEP FOR SETPOINT RAMP BLOCK FC04, FC06 if option 72 config (l/sec)	REAL	30	
1399	PAR_REAL[399]		Spare //	REAL	0	
1400	PAR_REAL[400]		Spare //	REAL	0	
1401	PAR_REAL[401]		LIC10ManOutputStep501 // LIC10 manual output in step 501 (%)	REAL	0	
1402	PAR_REAL[402]		LIC10SaveLevel // LIC10 percent level of setpoint, used when saving LIC10 output in dosing (%)	REAL	80	
1403	PAR_REAL[403]		STARTVALUE FIC6 // NOT USED IN LOGIX	REAL	10000	
1404	PAR_REAL[404]		INCREASE DECREACE SETPONT RAMP FOR FIC6 per scan in EU	REAL	50	
1405	PAR_REAL[405]		Spare //	REAL	100	
1406	PAR_REAL[406]		Spare //	REAL	0	
1407	PAR_REAL[407]		FC4_MAX_OUT // MAX OUTPUT SIGNAL (0.0 - 100.0%) NOT USED IN LOGIX	REAL	100	
1408	PAR_REAL[408]		FC4_MIN_OUT // MIN OUTPUT SIGNAL (0.0 - 100.0%) NOT USED IN LOGIX	REAL	0	
1409	PAR_REAL[409]		FC6_MAX_OUT // MAX OUTPUT SIGNAL (0.0 - 100.0%) NOT USED IN LOGIX	REAL	100	
1410	PAR_REAL[410]		FC6_MIN_OUT // MIN OUTPUT SIGNAL (0.0 - 100.0%) NOT USED IN LOGIX	REAL	0	
1411	PAR_REAL[411]		LC305_MAX_OUT // MAX OUTPUT SIGNAL (0.0 - 100.0%) NOT USED IN LOGIX	REAL	100	
1412	PAR_REAL[412]		LC305_MIN_OUT // MIN OUTPUT SIGNAL (0.0 - 100.0%) NOT USED IN LOGIX	REAL	0	
1413	PAR_REAL[413]		FC9_MAX_OUT // MAX OUTPUT SIGNAL (0.0 - 100.0%) NOT USED IN LOGIX	REAL	100	
1414	PAR_REAL[414]		FC9_MIN_OUT // MIN OUTPUT SIGNAL (0.0 - 100.0%) NOT USED IN LOGIX	REAL	0	
1415	PAR_REAL[415]		FC10_MAX_OUT // MAX OUTPUT SIGNAL (0.0 - 100.0%) NOT USED IN LOGIX	REAL	100	
1416	PAR_REAL[416]		FC10_MIN_OUT // MIN OUTPUT SIGNAL (0.0 - 100.0%) NOT USED IN LOGIX	REAL	0	
1417	PAR_REAL[417]		LC306_MAX_OUT // MAX OUTPUT SIGNAL (0.0 - 100.0%) NOT USED IN LOGIX	REAL	100	
1418	PAR_REAL[418]		LC306_MIN_OUT // MIN OUTPUT SIGNAL (0.0 - 100.0%) NOT USED IN LOGIX	REAL	0	
1419	PAR_REAL[419]		LC8_MAX_OUT // MAX OUTPUT SIGNAL (0.0 - 100.0%) NOT USED IN LOGIX	REAL	100	

Rev.	Date/ Sign.	Description

Tetra Therm Aseptic VTIS
T5844130774
Parameter list
Doc.type:

Dept.	Design/Drawn	Template doc. rev.	Date	Revision
BU DBF	**TOJ/**	**1.00.30**	**2016-09-28**	**-**

Tetra Pak
LUND **SWEDEN**
PLCP5844130774

This document and its content are our exclusive property and must not be copied, reproduced, transmitted or communicated to any other party or used for purposes not expressly permitted by us. Only to the extent expressly agreed by us this document may constitute a contractual obligation on our part.

Program parameter list.

Reg. No	Address	Symbol	Description	Unit:	Original	Changed
1420	PAR_REAL[420]		LC8_MIN_OUT // MIN OUTPUT SIGNAL (0.0 - 100.0%) NOT USED IN LOGIX	REAL	0	
1421	PAR_REAL[421]		LC32_MAX_OUT // MAX OUTPUT SIGNAL (0.0 - 100.0%) NOT USED IN LOGIX	REAL	100	
1422	PAR_REAL[422]		LC32_MIN_OUT // MIN OUTPUT SIGNAL (0.0 - 100.0%) NOT USED IN LOGIX	REAL	0	
1423	PAR_REAL[423]		TC26_MAX_OUT // MAX OUTPUT SIGNAL (0.0 - 100.0%) NOT USED IN LOGIX	REAL	100	
1424	PAR_REAL[424]		TC26_MIN_OUT // MIN OUTPUT SIGNAL (0.0 - 100.0%) NOT USED IN LOGIX	REAL	0	
1425	PAR_REAL[425]		TC331_MAX_OUT // MAX OUTPUT SIGNAL (0.0 - 100.0%) NOT USED IN LOGIX	REAL	100	
1426	PAR_REAL[426]		TC331_MIN_OUT // MIN OUTPUT SIGNAL (0.0 - 100.0%) NOT USED IN LOGIX	REAL	0	
1427	PAR_REAL[427]		TC36_MAX_OUT // MAX OUTPUT SIGNAL (0.0 - 100.0%) NOT USED IN LOGIX	REAL	100	
1428	PAR_REAL[428]		TC36_MIN_OUT // MIN OUTPUT SIGNAL (0.0 - 100.0%) NOT USED IN LOGIX	REAL	0	
1429	PAR_REAL[429]		TC95_MAX_OUT // MAX OUTPUT SIGNAL (0.0 - 100.0%) NOT USED IN LOGIX	REAL	100	
1430	PAR_REAL[430]		TC95_MIN_OUT // MIN OUTPUT SIGNAL (0.0 - 100.0%) NOT USED IN LOGIX	REAL	0	
1431	PAR_REAL[431]		TC381_MAX_OUT // MAX OUTPUT SIGNAL (0.0 - 100.0%)	REAL	25	
1432	PAR_REAL[432]		TC381_MIN_OUT // MIN OUTPUT SIGNAL (0.0 - 100.0%) NOT USED IN LOGIX	REAL	0	
1433	PAR_REAL[433]		TC43_MAX_OUT // MAX OUTPUT RAMP CV SIGNAL (0.0 - 100.0%)	REAL	100	
1434	PAR_REAL[434]		TC43_MIN_OUT // MIN OUTPUT SIGNAL (0.0 - 100.0%) NOT USED IN LOGIX	REAL	0	
1435	PAR_REAL[435]		TC44_FLEX_MAX_OUT // MAX OUTPUT RAMP CV SIGNAL (0.0 - 100.0%)	REAL	100	
1436	PAR_REAL[436]		TC44_FLEX_MIN_OUT // MIN OUTPUT SIGNAL (0.0 - 100.0%) NOT USED IN LOGIX	REAL	0	
1437	PAR_REAL[437]		TC44_VTIS_MAX_OUT // MAX OUTPUT RAMP CV SIGNAL (0.0 - 100.0%)	REAL	100	
1438	PAR_REAL[438]		TC44_VTIS_MIN_OUT // MIN OUTPUT SIGNAL (0.0 - 100.0%) NOT USED IN LOGIX	REAL	0	
1439	PAR_REAL[439]		TC344_MAX_OUT // MAX OUTPUT RAMP CV SIGNAL (0.0 - 100.0%)	REAL	100	
1440	PAR_REAL[440]		TC344_MIN_OUT // MIN OUTPUT SIGNAL (0.0 - 100.0%) NOT USED IN LOGIX	REAL	0	
1441	PAR_REAL[441]		TC50_MAX_OUT // MAX OUTPUT RAMP CV SIGNAL (0.0 - 100.0%)	REAL	100	
1442	PAR_REAL[442]		TC50_MIN_OUT // MIN OUTPUT SIGNAL (0.0 - 100.0%) NOT USED IN LOGIX	REAL	0	
1443	PAR_REAL[443]		TC49_MAX_OUT // MAX OUTPUT RAMP CV SIGNAL (0.0 - 100.0%)	REAL	100	
1444	PAR_REAL[444]		TC49_MIN_OUT // MIN OUTPUT SIGNAL (0.0 - 100.0%) NOT USED IN LOGIX	REAL	0	
1445	PAR_REAL[445]		TC56_MAX_OUT // MAX OUTPUT SIGNAL (0.0 - 100.0%) NOT USED IN LOGIX	REAL	100	
1446	PAR_REAL[446]		TC56_MIN_OUT // MIN OUTPUT SIGNAL (0.0 - 100.0%) NOT USED IN LOGIX	REAL	0	
1447	PAR_REAL[447]		TC08M_MAX_OUT // MAX OUTPUT SIGNAL (0.0 - 100.0%)	REAL	87,5	
1448	PAR_REAL[448]		TC08M_MIN_OUT // MIN OUTPUT SIGNAL (0.0 - 100.0%)	REAL	0	
1449	PAR_REAL[449]		Spare //	REAL	100	
1450	PAR_REAL[450]		Spare //	REAL	0	
1451	PAR_REAL[451]		LC10_MAX_OUT // MIN OUTPUT SIGNAL (0.0 - 100.0%) NOT USED IN LOGIX	REAL	100	
1452	PAR_REAL[452]		LC10_MIN_OUT // MIN OUTPUT SIGNAL (0.0 - 100.0%) NOT USED IN LOGIX	REAL	0	
1453	PAR_REAL[453]		TC60_MAX_OUT // MAX OUTPUT SIGNAL (0.0 - 100.0%) NOT USED IN LOGIX	REAL	100	
1454	PAR_REAL[454]		TC60_MIN_OUT // MIN OUTPUT SIGNAL (0.0 - 100.0%) NOT USED IN LOGIX	REAL	0	

Rev.	Date/ Sign.	Description

Tetra Therm Aseptic VTIS
T5844130774
Parameter list

Doc.type:

Dept.	Design/Drawn	Template doc. rev.	Date	Revision
BU DBF	**TOJ/**	**1.00.30**	**2016-09-28**	**-**

Tetra Pak
LUND **SWEDEN**
PLCP5844130774

This document and its content are our exclusive property and must not be copied, reproduced, transmitted or communicated to any other party or used for purposes not expressly permitted by us. Only to the extent expressly agreed by us this document may constitute a contractual obligation on our part.

Program parameter list.

Reg. No	Address	Symbol	Description	Unit:	Original	Changed
1455	PAR_REAL[455]		Spare //	REAL	100	
1456	PAR_REAL[456]		Spare //	REAL	0	
1457	PAR_REAL[457]		TC63_MAX_OUT // MAX OUTPUT SIGNAL (0.0 - 100.0%) NOT USED IN LOGIX	REAL	100	
1458	PAR_REAL[458]		TC63_MIN_OUT // MIN OUTPUT SIGNAL (0.0 - 100.0%) NOT USED IN LOGIX	REAL	0	
1459	PAR_REAL[459]		TC64_MAX_OUT // MAX OUTPUT SIGNAL (0.0 - 100.0%) NOT USED IN LOGIX	REAL	100	
1460	PAR_REAL[460]		TC64_MIN_OUT // MIN OUTPUT SIGNAL (0.0 - 100.0%) NOT USED IN LOGIX	REAL	0	
1461	PAR_REAL[461]		TC67_MAX_OUT // MAX OUTPUT SIGNAL (0.0 - 100.0%) NOT USED IN LOGIX	REAL	100	
1462	PAR_REAL[462]		TC67_MIN_OUT // MIN OUTPUT SIGNAL (0.0 - 100.0%) NOT USED IN LOGIX	REAL	0	
1463	PAR_REAL[463]		TC99_MAX_OUT // MAX OUTPUT SIGNAL (0.0 - 100.0%) NOT USED IN LOGIX	REAL	100	
1464	PAR_REAL[464]		TC99_MIN_OUT // MIN OUTPUT SIGNAL (0.0 - 100.0%) NOT USED IN LOGIX	REAL	0	
1465	PAR_REAL[465]		TC99S_MAX_OUT // MAX OUTPUT SIGNAL (0.0 - 100.0%) NOT USED IN LOGIX	REAL	100	
1466	PAR_REAL[466]		TC99S_MIN_OUT // MIN OUTPUT SIGNAL (0.0 - 100.0%) NOT USED IN LOGIX	REAL	0	
1467	PAR_REAL[467]		PC4_MAX_OUT // MAX OUTPUT SIGNAL (0.0 - 100.0%) NOT USED IN LOGIX	REAL	100	
1468	PAR_REAL[468]		PC4_MIN_OUT // MIN OUTPUT SIGNAL (0.0 - 100.0%) NOT USED IN LOGIX	REAL	0	
1469	PAR_REAL[469]		PC330_MAX_OUT // MAX OUTPUT SIGNAL (0.0 - 100.0%)	REAL	100	
1470	PAR_REAL[470]		PC330_MIN_OUT // MIN OUTPUT SIGNAL (0.0 - 100.0%) NOT USED IN LOGIX	REAL	0	
1471	PAR_REAL[471]		Spare //	REAL	137780	
1472	PAR_REAL[472]		TC39_MAX_OUT // MAX OUTPUT SIGNAL (0.0 - 100.0%) NOT USED IN LOGIX	REAL	100	
1473	PAR_REAL[473]		TC39_MIN_OUT // MIN OUTPUT SIGNAL (0.0 - 100.0%) NOT USED IN LOGIX	REAL	0	
1474	PAR_REAL[474]		PC827_MAX_OUT // MAX OUTPUT SIGNAL (0.0 - 100.0%) NOT USED IN LOGIX	REAL	100	
1475	PAR_REAL[475]		PC827_MIN_OUT // MIN OUTPUT SIGNAL (0.0 - 100.0%) NOT USED IN LOGIX	REAL	0	
1476	PAR_REAL[476]		PC827_2_MAX_OUT // MAX OUTPUT SIGNAL (0.0 - 100.0%) NOT USED IN LOGIX	REAL	100	
1477	PAR_REAL[477]		PC827_2_MIN_OUT // MIN OUTPUT SIGNAL (0.0 - 100.0%) NOT USED IN LOGIX	REAL	0	
1478	PAR_REAL[478]		LC504_MAX_OUT // MAX OUTPUT SIGNAL (0.0 - 100.0%) NOT USED IN LOGIX	REAL	100	
1479	PAR_REAL[479]		LC504_MIN_OUT // MIN OUTPUT SIGNAL (0.0 - 100.0%) NOT USED IN LOGIX	REAL	0	
1480	PAR_REAL[480]		TIC544_MAX_OUT // MAX OUTPUT SIGNAL (0.0 - 100.0%) NOT USED IN LOGIX	REAL	100	
1481	PAR_REAL[481]		TIC544_MIN_OUT // MIN OUTPUT SIGNAL (0.0 - 100.0%) NOT USED IN LOGIX	REAL	0	
1482	PAR_REAL[482]		TIC529_MAX_OUT // MAX OUTPUT SIGNAL (0.0 - 100.0%) NOT USED IN LOGIX	REAL	100	
1483	PAR_REAL[483]		TIC529_MIN_OUT // MIN OUTPUT SIGNAL (0.0 - 100.0%) NOT USED IN LOGIX	REAL	0	
1484	PAR_REAL[484]		Spare //	REAL	0,5	
1485	PAR_REAL[485]		TT2_GainFF // FLEX	REAL	10	
1486	PAR_REAL[486]		TT2_FilterTimeFF // FLEX	REAL	30	
1487	PAR_REAL[487]		Spare //	REAL	0	
1488	PAR_REAL[488]		Spare //	REAL	0	
1489	PAR_REAL[489]		Spare //	REAL	15	

Rev.	Date/ Sign.	Description

Tetra Therm Aseptic VTIS
T5844130774
Parameter list

Tetra Pak
LUND **SWEDEN**

Doc.type:					
Dept.	Design/Drawn	Template doc. rev.	Date	Revision	
BU DBF	**TOJ/**	**1.00.30**	**2016-09-28**	**-**	**PLCP5844130774**

This document and its content are our exclusive property and must not be copied, reproduced, transmitted or communicated to any other party or used for purposes not expressly permitted by us. Only to the extent expressly agreed by us this document may constitute a contractual obligation on our part.

Program parameter list.

Reg. No	Address	Symbol	Description	Unit:	Original	Changed
1490	PAR_REAL[490]		S_TT44_GainFF //	REAL	10	
1491	PAR_REAL[491]		S_TT44_FilterTimeFF //	REAL	30	
1492	PAR_REAL[492]		S_TT4_GainFF //	REAL	10	
1493	PAR_REAL[493]		S_TT4_FilterTimeFF //	REAL	30	
1494	PAR_REAL[494]		S_TT10_GainFF //	REAL	10	
1495	PAR_REAL[495]		S_TT10_FilterTimeFF //	REAL	30	
1496	PAR_REAL[496]		FC10S_MIN_SP // MIN OUTPUT SIGNAL (0.0 - 100.0%)	REAL	0	
1497	PAR_REAL[497]		FC10S_MAX_SP // MAX OUTPUT SIGNAL (0.0 - 100.0%)	REAL	35000	
1498	PAR_REAL[498]		S_TC99S_MIN_SP // MIN OUTPUT SIGNAL (0.0 - 100.0%)	REAL	37,5	
1499	PAR_REAL[499]		S_TC99S_MAX_SP // MAX OUTPUT SIGNAL (0.0 - 100.0%)	REAL	59	
1500	PAR_REAL[500]		OutTIC56_AIC	REAL	8	
1501	PAR_REAL[501]		OutTIC56_CIP	REAL	15	
1502	PAR_REAL[502]		OutTIC56_Step71_85_122	REAL	100	
1503	PAR_REAL[503]		S_TIC44_F0_START_VALUE // START VALUE FOR SETPOINT RAMP BLOCK TC44_FLEX	REAL	85	
1504	PAR_REAL[504]		S_TIC44_F0_RAMP_STEP // INCREASE AND DECREASE STEP FOR SETPOINT RAMP BLOCK TIC44_FLEX	REAL	0,25	
1505	PAR_REAL[505]		Spare //	REAL	0,25	
1506	PAR_REAL[506]		Add sp to TC44 % of step 27	REAL	80	
1507	PAR_REAL[507]		Spare //	REAL	0	
1508	PAR_REAL[508]		PC827_HystSaveStartvalue // Hysteresis for condition to save startvalue	REAL	1	
1509	PAR_REAL[509]		Spare //	REAL	0	
1510	PAR_REAL[510]		Spare //	REAL	0	
1511	PAR_REAL[511]		HOMO_STAGE1_INC_DEC_STEP //	REAL	1	
1512	PAR_REAL[512]		Spare //	REAL	0	
1513	PAR_REAL[513]		Spare //	REAL	0	
1514	PAR_REAL[514]		Spare //	REAL	0	
1515	PAR_REAL[515]		S_TIC344_F0_START_VALUE // START VALUE FOR SETPOINT RAMP BLOCK TC344	REAL	85	
1516	PAR_REAL[516]		S_TIC344_F0_RAMP_STEP // INCREASE AND DECREASE STEP FOR SETPOINT RAMP BLOCK TIC344	REAL	0,15	
1517	PAR_REAL[517]		UI Real Parameters	REAL	0	
1518	PAR_REAL[518]		UI Real Parameters	REAL	0	
1519	PAR_REAL[519]		Spare //	REAL	0	
1520	PAR_REAL[520]		Spare //	REAL	0	
1521	PAR_REAL[521]		HOMO_STAGE2_INC_DEC_STEP //	REAL	1	
1522	PAR_REAL[522]		Spare //	REAL	0	
1523	PAR_REAL[523]		Spare //	REAL	0	
1524	PAR_REAL[524]		Spare //	REAL	0	

Rev.	Date/ Sign.	Description

Tetra Therm Aseptic VTIS
T5844130774
Parameter list

Doc.type:

Dept.	Design/Drawn	Template doc. rev.	Date	Revision
BU DBF	**TOJ/**	**1.00.30**	**2016-09-28**	**-**

Tetra Pak
LUND **SWEDEN**
PLCP5844130774

This document and its content are our exclusive property and must not be copied, reproduced, transmitted or communicated to any other party or used for purposes not expressly permitted by us. Only to the extent expressly agreed by us this document may constitute a contractual obligation on our part.

Program parameter list.

Reg. No	Address	Symbol	Description	Unit:	Original	Changed
1525	PAR_REAL[525]		Spare //	REAL	0	
1526	PAR_REAL[526]		RefillDamperTime // Time to refill homo dampers 901// Minutes	REAL	60	
1527	PAR_REAL[527]		HC_EFF_OP // HOLDING CELLS EFF. FROM TPOP IN %	REAL	85	
1528	PAR_REAL[528]		RefillDamperTime // Time to refill homo dampers 902// Minutes	REAL	60	
1529	PAR_REAL[529]		FLIP_V505_HEATING // Lim < TT 544 Flip V505 in heating.	REAL	110	
1530	PAR_REAL[530]		MIN_T_F_V505_TT502 // Min temp TT544 for flip V505 if low temp TT502.	REAL	110	
1531	PAR_REAL[531]		FLIP_TT502_LOW // Lim > TT502 flip V505 in sterilising.	REAL	125	
1532	PAR_REAL[532]		V535 HYST. ACT V535 IF TT504 < SP TC544	REAL	1	
1533	PAR_REAL[533]		LOW_TEMP_PROD_INF // 0 - 160 or (0 - 350 US)	REAL	130	
1534	PAR_REAL[534]		LC504_RMP_ADD // ADD SETPOINT WHEN RAMPING IN STEP 12 LC504	REAL	8	
1535	PAR_REAL[535]		Add sp to TC344/TC544 % of step 27	REAL	80	
1536	PAR_REAL[536]		ADD_TC544_COOLING // ADD TO SET POINT TC544 IN COOLING 0 - 160.0°C	REAL	3	
1537	PAR_REAL[537]		ADJUST_BOLT_LENGHT // LENGT OF ADJUSMENT BOLT INFUSER IN 1/10 MM	REAL	30	
1538	PAR_REAL[538]		Spare //	REAL	35	
1539	PAR_REAL[539]		Add sp to LC504 % of step 27	REAL	40	
1540	PAR_REAL[540]		S_LC504_ADD_START_ST7 // ADD TO SETPOINT IN BEGINNING OF STEP 7 LC504 (%)	REAL	40	
1541	PAR_REAL[541]		INFLUENSE_ON_LC504 // INFLUENSE ON V504 FROM FLOW	REAL	100	
1542	PAR_REAL[542]		MAX_INFLUENS_FF_V504 // FROM FLOW	REAL	25	
1543	PAR_REAL[543]		Spare //	REAL	3	
1544	PAR_REAL[544]		INFLUENSE_LC504_PRES // INFLUENSE ON V504 FROM PRESS. IN INFUSER	REAL	100	
1545	PAR_REAL[545]		MAX_INFLUENSE_V504_P // MAX INFLUENSE ON V50 FROM PRESS. IN INFUSER	REAL	25	
1546	PAR_REAL[546]		MaxOutStep7 // Forced out LC504 in start of cooling	REAL	0	
1547	PAR_REAL[547]		SP_TEMP_V61A_B_ST5 // SETPOINT FOR CHANGE FROM V61 A to B IN STEP 5 (CMP WITH TT1)	REAL	80	
1548	PAR_REAL[548]		Spare //	REAL	10	
1549	PAR_REAL[549]		Spare //	REAL	4	
1550	PAR_REAL[550]		Spare //	REAL	60	
1551	PAR_REAL[551]		HC2_TIM // HOLDING CELL 2 NOMINIAL TIME SEC	REAL	4	
1552	PAR_REAL[552]		HC3_TIM // HOLDING CELL 3 NOMINIAL TIME SEC	REAL	4	
1553	PAR_REAL[553]		HC1_TIM // HOLDING CELL 1 NOMINIAL TIME SEC	REAL	4	
1554	PAR_REAL[554]		HC4_TIM // HOLDING CELL 4 NOMINIAL TIME SEC	REAL	15	
1555	PAR_REAL[555]		HC5_TIM // HOLDING CELL 5 NOMINIAL TIME SEC	REAL	4	
1556	PAR_REAL[556]		Spare //	REAL	16	
1557	PAR_REAL[557]		HC1 US Legal limit FSH (GPM)	REAL	16	
1558	PAR_REAL[558]		HC2 US Legal limit FSH (GPM)	REAL	17	
1559	PAR_REAL[559]		HC3 US Legal limit FSH (GPM)	REAL	18	

Rev.	Date/ Sign.	Description

Tetra Therm Aseptic VTIS
T5844130774
Parameter list

Doc.type:

Dept.	Design/Drawn	Template doc. rev.	Date	Revision
BU DBF	**TOJ/**	**1.00.30**	**2016-09-28**	**-**

Tetra Pak
LUND **SWEDEN**
PLCP5844130774

This document and its content are our exclusive property and must not be copied, reproduced, transmitted or communicated to any other party or used for purposes not expressly permitted by us. Only to the extent expressly agreed by us this document may constitute a contractual obligation on our part.

Program parameter list.

Reg. No	Address	Symbol	Description	Unit:	Original	Changed
1560	PAR_REAL[560]		HC4 US Legal limit FSH (GPM)	REAL	19	
1561	PAR_REAL[561]		HC5 US Legal limit FSH (GPM)	REAL	59	
1562	PAR_REAL[562]		Spare //	REAL	21	
1563	PAR_REAL[563]		Spare //	REAL	18	
1564	PAR_REAL[564]		Spare //	REAL	100	
1565	PAR_REAL[565]		Z-value low acid // Zvalue for low acid =9.4 "ESL"	REAL	9,4	
1566	PAR_REAL[566]		Z-value low acid // Zvalue for low acid =10 "UHT"	REAL	10	
1567	PAR_REAL[567]		Z-value high acid // Zvalue for high acid =7	REAL	7	
1568	PAR_REAL[568]		Spare //	REAL	7	
1569	PAR_REAL[569]		Spare //	REAL	50	
1570	PAR_REAL[570]		MAX_TEMP_SP_TC344 // Limmit the max temperature for F0 temperature to TC344	REAL	145	
1571	PAR_REAL[571]		Spare //	REAL	121,1	
1572	PAR_REAL[572]		Spare //	REAL	80	
1573	PAR_REAL[573]		Spare //	REAL	50	
1574	PAR_REAL[574]		Spare //	REAL	50	
1575	PAR_REAL[575]		Spare //	REAL	200	
1576	PAR_REAL[576]		Spare //	REAL	50	
1577	PAR_REAL[577]		M308_SHUT_D //	REAL	60	
1578	PAR_REAL[578]		M308_H_CIP //	REAL	65	
1579	PAR_REAL[579]		M308_L_CIP //	REAL	40	
1580	PAR_REAL[580]		M308_PRE_1_6 //	REAL	55	
1581	PAR_REAL[581]		M308_7_11	REAL	60	
1582	PAR_REAL[582]		M308_HIBERNATION // HIBERNATION	REAL	55	
1583	PAR_REAL[583]		M308_INC_DEC_STEP // INCREASE AND DECREASE STEP FOR SELECTION BLOCK	REAL	1	
1584	PAR_REAL[584]		M308_Spare //	REAL	1	
1585	PAR_REAL[585]		M308_START_VALUE // START VALUE FOR RAMP BLOCK	REAL	0	
1586	PAR_REAL[586]		M308_MAX // MAX OUTPUT FOR RAMP BLOCK NOT USED IN LOGIX	REAL	100	
1587	PAR_REAL[587]		M308_MIN // MIN OUTPUT FOR RAMP BLOCK NOT USED IN LOGIX	REAL	0	
1588	PAR_REAL[588]		M308_S_M308_DosRinseLTCIP //	REAL	44	
1589	PAR_REAL[589]		M308_Step4 //	REAL	78	
1590	PAR_REAL[590]		M308_Spare //	REAL	50	
1591	PAR_REAL[591]		M308_Spare //	REAL	50	
1592	PAR_REAL[592]		M308_Spare //	REAL	50	
1593	PAR_REAL[593]		Spare //	REAL	50	
1594	PAR_REAL[594]		Spare //	REAL	50	

Rev.	Date/ Sign.	Description

Tetra Therm Aseptic VTIS
T5844130774
Parameter list

Tetra Pak
LUND **SWEDEN**

Doc.type:					
Dept.	Design/Drawn	Template doc. rev.	Date	Revision	
BU DBF	**TOJ/**	**1.00.30**	**2016-09-28**	**-**	**PLCP5844130774**

This document and its content are our exclusive property and must not be copied, reproduced, transmitted or communicated to any other party or used for purposes not expressly permitted by us. Only to the extent expressly agreed by us this document may constitute a contractual obligation on our part.

Program parameter list.

Reg. No	Address	Symbol	Description	Unit:	Original	Changed
1595	PAR_REAL[595]		Spare //	REAL	50	
1596	PAR_REAL[596]		Spare //	REAL	50	
1597	PAR_REAL[597]		Spare //	REAL	50	
1598	PAR_REAL[598]		Spare //	REAL	50	
1599	PAR_REAL[599]		PAC_SplitTime_Lt_Ht // When PAC Lt/Ht cleaning split total circ time (% Lt time)	REAL	50	
1600	PAR_REAL[600]		FLIP_V527_HEATING //	REAL	95	
1601	PAR_REAL[601]		FLIP_V527_HEATING_CIP //	REAL	95	
1602	PAR_REAL[602]		M9_SHUT_D //	REAL	50	
1603	PAR_REAL[603]		M9_H_CIP //	REAL	55	
1604	PAR_REAL[604]		M9_L_CIP //	REAL	77	
1605	PAR_REAL[605]		M9_PRE_1_6//	REAL	40	
1606	PAR_REAL[606]		M9_PRE_7_11 //	REAL	65	
1607	PAR_REAL[607]		M9_HIBERNATION // HIBERNATION	REAL	40	
1608	PAR_REAL[608]		M9_SPARE_2 //	REAL	0	
1609	PAR_REAL[609]		M9_SPARE_3 //	REAL	0	
1610	PAR_REAL[610]		M9_INC_DEC_STEP // INCREASE AND DECREASE STEP FOR SELECTION BLOCK	REAL	1	
1611	PAR_REAL[611]		M9 Spare //	REAL	1	
1612	PAR_REAL[612]		M9_START_VALUE // START VALUE FOR RAMP BLOCK	REAL	30	
1613	PAR_REAL[613]		M9_MAX // MAX OUTPUT FOR RAMP BLOCK NOT USED IN LOGIX	REAL	100	
1614	PAR_REAL[614]		M9_MIN // MAX OUTPUT FOR RAMP BLOCK NOT USED IN LOGIX	REAL	0	
1615	PAR_REAL[615]		Spare // M9	REAL	50	
1616	PAR_REAL[616]		Spare // M9	REAL	50	
1617	PAR_REAL[617]		Spare // M9	REAL	50	
1618	PAR_REAL[618]		Spare // M9	REAL	50	
1619	PAR_REAL[619]		Spare //	REAL	50	
1620	PAR_REAL[620]		TC44FlexAddSetpRampUp // (°C) Add to actual setpoint if ramping up the product flow	REAL	1,5	
1621	PAR_REAL[621]		TC44FlexAddSetpRampDown // (°C) Add to actual setpoint if ramping down the product flow	REAL	0,5	
1622	PAR_REAL[622]		Spare //	REAL	0	
1623	PAR_REAL[623]		TC44VtisAddSetpRampUp // (°C) Add to actual setpoint if ramping up the product flow	REAL	0,5	
1624	PAR_REAL[624]		TC44VtisAddSetpRampDown // (°C) Add to actual setpoint if ramping down the product flow	REAL	0,5	
1625	PAR_REAL[625]		Spare //	REAL	0	
1626	PAR_REAL[626]		Spare //	REAL	50	
1627	PAR_REAL[627]		Spare //	REAL	50	
1628	PAR_REAL[628]		Spare //	REAL	50	
1629	PAR_REAL[629]		Limit max out for M305 in LT CIP	REAL	90	

Rev.	Date/ Sign.	Description

Tetra Therm Aseptic VTIS
T5844130774
Parameter list

Tetra Pak
LUND **SWEDEN**

Doc.type:					
Dept.	Design/Drawn	Template doc. rev.	Date	Revision	
BU DBF	**TOJ/**	**1.00.30**	**2016-09-28**	**-**	**PLCP5844130774**

This document and its content are our exclusive property and must not be copied, reproduced, transmitted or communicated to any other party or used for purposes not expressly permitted by us. Only to the extent expressly agreed by us this document may constitute a contractual obligation on our part.

Program parameter list.

Reg. No	Address	Symbol	Description	Unit:	Original	Changed
1630	PAR_REAL[630]		V19.2 CIP Rinse Volume (litre)	REAL	50	
1631	PAR_REAL[631]		DosRinse_VolSCPerc //	REAL	75	
1632	PAR_REAL[632]		Limit max out for M305 when V315 is activated	REAL	25	
1633	PAR_REAL[633]		RinseSC_VolAPerc_Step602 // Rinse SC - Percent of volume A used for step 602 (%)	REAL	80	
1634	PAR_REAL[634]		RinseSC_VolSCPerc // Rinse SC - Percent of volume in SC used for "Fill pure water" steps (%)	REAL	150	
1635	PAR_REAL[635]		VOL_STEP_600 // Rinse SC - Idle	REAL	0	
1636	PAR_REAL[636]		VOL_STEP_601 // Rinse SC - Empty SC	REAL	0	
1637	PAR_REAL[637]		VOL_STEP_602 // Rinse SC - Wait for pure water	REAL	620,56	
1638	PAR_REAL[638]		VOL_STEP_603 // Rinse SC - Fill pure water 1	REAL	30	
1639	PAR_REAL[639]		VOL_STEP_604 // Rinse SC - Rinse nossle	REAL	0	
1640	PAR_REAL[640]		VOL_STEP_605 // Rinse SC - Fill pure water 2	REAL	30	
1641	PAR_REAL[641]		VOL_STEP_606 // Rinse SC - Rinse V314	REAL	0	
1642	PAR_REAL[642]		VOL_STEP_607 // Rinse SC - Fill pure water 3	REAL	30	
1643	PAR_REAL[643]		VOL_STEP_608 // Rinse SC - Serial rinse forward	REAL	0	
1644	PAR_REAL[644]		Spare //	REAL	50	
1645	PAR_REAL[645]		Spare //	REAL	50	
1646	PAR_REAL[646]		Spare // M10	REAL	50	
1647	PAR_REAL[647]		Spare // M10	REAL	50	
1648	PAR_REAL[648]		Spare // M10	REAL	50	
1649	PAR_REAL[649]		Spare // M10	REAL	50	
1650	PAR_REAL[650]		Spare // M10	REAL	50	
1651	PAR_REAL[651]		M10_SHUT_D //	REAL	72	
1652	PAR_REAL[652]		M10_H_CIP //	REAL	72	
1653	PAR_REAL[653]		M10_L_CIP //	REAL	80	
1654	PAR_REAL[654]		M10_PRE_1_11 //	REAL	70	
1655	PAR_REAL[655]		M10_spare	REAL	28	
1656	PAR_REAL[656]		M10_HIBERNATION // HIBERNATION	REAL	45	
1657	PAR_REAL[657]		M10_SPARE_2 //	REAL	0	
1658	PAR_REAL[658]		M10_SPARE_3 //	REAL	0	
1659	PAR_REAL[659]		M10_INC_DEC_STEP // INCREASE AND DECREASE STEP FOR SELECTION BLOCK	REAL	1	
1660	PAR_REAL[660]		M10_SPARE_4 //	REAL	1	
1661	PAR_REAL[661]		M10_START_VALUE // START VALUE FOR RAMP BLOCK	REAL	30	
1662	PAR_REAL[662]		M10_MAX // MAX OUTPUT FOR RAMP BLOCK NOT USED IN LOGIX	REAL	100	
1663	PAR_REAL[663]		M10_MIN // MAX OUTPUT FOR RAMP BLOCK NOT USED IN LOGIX	REAL	0	
1664	PAR_REAL[664]		BASE_VOLUME_A // Volume in steriliser from M2 up to AFM / Alsafe	REAL	700	

Rev.	Date/ Sign.	Description

Tetra Therm Aseptic VTIS
T5844130774
Parameter list

Doc.type:

Dept.	Design/Drawn	Template doc. rev.	Date	Revision
BU DBF	**TOJ/**	**1.00.30**	**2016-09-28**	**-**

Tetra Pak
LUND **SWEDEN**
PLCP5844130774

This document and its content are our exclusive property and must not be copied, reproduced, transmitted or communicated to any other party or used for purposes not expressly permitted by us. Only to the extent expressly agreed by us this document may constitute a contractual obligation on our part.

Program parameter list.

Reg. No	Address	Symbol	Description	Unit:	Original	Changed
1665	PAR_REAL[665]		ADD_VOLUME_A // Total volume for connected extra equipment	REAL	75,7	
1666	PAR_REAL[666]		TOTAL_VOLUME_A // Total volume from M2 up to AFM / Alsafe	REAL	775,7	
1667	PAR_REAL[667]		VOLUME_B_TOTAL // Volume in pipe from AFM / Alsafe and back to V75	REAL	200	
1668	PAR_REAL[668]		VOLUME_B // Volume in pipe from AFM / Alsafe and back to V75	REAL	200	
1669	PAR_REAL[669]		VOLUME_C // Volume in pipe from V75 to reclaim tank	REAL	0	
1670	PAR_REAL[670]		VOLUME_D // Volume in pipe between reclaim tank and WW tank	REAL	150	
1671	PAR_REAL[671]		VOLUME_ // Spare	REAL	0	
1672	PAR_REAL[672]		VOLUME_E_FILL // Total mix volume filling e1 + e2.	REAL	50	
1673	PAR_REAL[673]		Spare	REAL	100	
1674	PAR_REAL[674]		Spare	REAL	60	
1675	PAR_REAL[675]		VOLUME_E_EMPTY // Total mix volume emptying e3 + e4.	REAL	60	
1676	PAR_REAL[676]		Spare	REAL	85	
1677	PAR_REAL[677]		Spare	REAL	100	
1678	PAR_REAL[678]		VOLUME_J_SUPPLY_LINE // J = Volume of supply line	REAL	0	
1679	PAR_REAL[679]		VOLUME_Kf_SUPPLY_LINE // Kf = Mix volume supply line	REAL	0	
1680	PAR_REAL[680]		VOL_STAB_HC // Volume to be added IF 60 - 120 SEC	REAL	61	
1681	PAR_REAL[681]		VOL_HC2 // Volume to be added IF HC2	REAL	21,5	
1682	PAR_REAL[682]		VOL_HC3 // Volume to be added if HC3	REAL	43,5	
1683	PAR_REAL[683]		VOL_HC1 // Volume to be added if HC1 4 SEC default	REAL	14,7	
1684	PAR_REAL[684]		VOL_HC4 // Volume to be added if HC4	REAL	59	
1685	PAR_REAL[685]		VOL_HC5 // Volume to be added if HC5	REAL	0	
1686	PAR_REAL[686]		VOL_EXTRA_COOL_2 // Volume to be added if Extra cooler 2	REAL	192	
1687	PAR_REAL[687]		VOL_DEAREATOR // Volume to be added if Dearator connected	REAL	10	
1688	PAR_REAL[688]		VOL_INFUSER // Volume to be added if Infuser	REAL	1100	
1689	PAR_REAL[689]		VOL_AB // Volume to be added if alsafe and AFM	REAL	6	
1690	PAR_REAL[690]		VOL_TIMING_PUMP // Volume to be subbstracted if timing pump	REAL	10	
1691	PAR_REAL[691]		S_VOL_HeatingSec9 // Volume to be subbstracted if heater sect 9 NOT connected	REAL	0	
1692	PAR_REAL[692]		S_VOL_HeatingSec8 // Volume to be subbstracted if heater 8 NOT connected	REAL	0	
1693	PAR_REAL[693]		S_VOL_P // Volume to be added if	REAL	20	
1694	PAR_REAL[694]		S_VOL_HeatinSec10 // Volume to be subbstracted if heater 10 NOT connected	REAL	0	
1695	PAR_REAL[695]		S_VOL_Section 16/16.1 // Volume to be added if US ESL	REAL	0	
1696	PAR_REAL[696]		VOL_SPARE_9 // Volume to be added if	REAL	0	
1697	PAR_REAL[697]		VOL_SPARE_10 // Volume to be added if	REAL	0	
1698	PAR_REAL[698]		VOL_SPARE_11 // Volume to be added if	REAL	0	
1699	PAR_REAL[699]		VOL_SPARE_12 // Volume to be added if	REAL	0	

Rev.	Date/ Sign.	Description

Tetra Therm Aseptic VTIS
T5844130774
Parameter list

Doc.type:

Dept.	Design/Drawn	Template doc. rev.	Date	Revision
BU DBF	**TOJ/**	**1.00.30**	**2016-09-28**	**-**

Tetra Pak
LUND **SWEDEN**
PLCP5844130774

This document and its content are our exclusive property and must not be copied, reproduced, transmitted or communicated to any other party or used for purposes not expressly permitted by us. Only to the extent expressly agreed by us this document may constitute a contractual obligation on our part.

Program parameter list.

Reg. No	Address	Symbol	Description	Unit:	Original	Changed
1700	PAR_REAL[700]		VOL_STEP_0 //	REAL	0	
1701	PAR_REAL[701]		VOL_STEP_1 // VOL_STEP 1 ACT.VALVES	REAL	0	
1702	PAR_REAL[702]		VOL_STEP_2 // VOL_STEP 2 ACT PUMPS	REAL	0	
1703	PAR_REAL[703]		VOL_STEP_3 // VOL_STEP 3 FILL UP PLANT see PAR_REAL 666-667	REAL	487,85	
1704	PAR_REAL[704]		VOL_STEP_4 // VOL_STEP 4 ACT.STEAM	REAL	0	
1705	PAR_REAL[705]		VOL_STEP_5 // VOL_STEP 5 HEATING	REAL	0	
1706	PAR_REAL[706]		VOL_STEP_6 // VOL_STEP 6 STERILIZING	REAL	0	
1707	PAR_REAL[707]		VOL_STEP_7 // VOL_STEP 7 COOLING 1	REAL	0	
1708	PAR_REAL[708]		VOL_STEP_8 //	REAL	0	
1709	PAR_REAL[709]		VOL_STEP_9 //	REAL	0	
1710	PAR_REAL[710]		VOL_STEP_10 // VOL_STEP 10 COOLING 2	REAL	0	
1711	PAR_REAL[711]		VOL_STEP_11 // VOL_STEP 11 COOLING 3	REAL	0	
1712	PAR_REAL[712]		VOL_STEP_12 // VOL_STEP 12 STABILISING	REAL	0	
1713	PAR_REAL[713]		VOL_STEP_13 // Change flow control	REAL	0	
1714	PAR_REAL[714]		VOL_STEP_14 //	REAL	0	
1715	PAR_REAL[715]		VOL_STEP_15 //	REAL	0	
1716	PAR_REAL[716]		VOL_STEP_16 //	REAL	0	
1717	PAR_REAL[717]		VOL_STEP_17 // VOL_STEP 17 STERILE WATER	REAL	0	
1718	PAR_REAL[718]		VOL_STEP_18 //	REAL	0	
1719	PAR_REAL[719]		VOL_STEP_19 //	REAL	0	
1720	PAR_REAL[720]		VOL_STEP_20 // Fill up supply line with water	REAL	0	
1721	PAR_REAL[721]		VOL_STEP_21 // Prepare production	REAL	0	
1722	PAR_REAL[722]		VOL_STEP_22 // Fill supply line, mix zone to BTD	REAL	0	
1723	PAR_REAL[723]		VOL_STEP_23 // Fill pure product in line into BTD	REAL	0	
1724	PAR_REAL[724]		VOL_STEP_24 // Empty BTD	REAL	0	
1725	PAR_REAL[725]		VOL_STEP_25 // Water from HB tank	REAL	0	
1726	PAR_REAL[726]		VOL_STEP_26 // Fill BTD over LL	REAL	100	
1727	PAR_REAL[727]		VOL_STEP_27 // Fill machine, mix zone to connection point	REAL	775,7	
1728	PAR_REAL[728]		VOL_STEP_28 // Fill machine, pure product to connection point	REAL	50	
1729	PAR_REAL[729]		VOL_STEP_29 // Production	REAL	0	
1730	PAR_REAL[730]		VOL_STEP_30 // Empty tank line	REAL	0	
1731	PAR_REAL[731]		VOL_STEP_31 // Empty supply line	REAL	0	
1732	PAR_REAL[732]		VOL_STEP_32 //	REAL	0	
1733	PAR_REAL[733]		VOL_STEP_33 //	REAL	0	
1734	PAR_REAL[734]		VOL_STEP_34 //	REAL	0	

Rev.	Date/ Sign.	Description

Tetra Therm Aseptic VTIS
T5844130774
Parameter list

Tetra Pak

LUND **SWEDEN**

Doc.type:					
Dept.	Design/Drawn	Template doc. rev.	Date	Revision	
BU DBF	**TOJ/**	**1.00.30**	**2016-09-28**	**-**	**PLCP5844130774**

This document and its content are our exclusive property and must not be copied, reproduced, transmitted or communicated to any other party or used for purposes not expressly permitted by us. Only to the extent expressly agreed by us this document may constitute a contractual obligation on our part.

Program parameter list.

Reg. No	Address	Symbol	Description	Unit:	Original	Changed
1735	PAR_REAL[735]		VOL_STEP_35 //	REAL	0	
1736	PAR_REAL[736]		VOL_STEP_36 //	REAL	0	
1737	PAR_REAL[737]		VOL_STEP_37 //	REAL	0	
1738	PAR_REAL[738]		VOL_STEP_38 //	REAL	0	
1739	PAR_REAL[739]		VOL_STEP_39 //	REAL	0	
1740	PAR_REAL[740]		VOL_STEP_40 // Empty BTD	REAL	0	
1741	PAR_REAL[741]		VOL_STEP_41 // Fill mix zone HP into BTD	REAL	0	
1742	PAR_REAL[742]		VOL_STEP_42 // Empty BTD	REAL	0	
1743	PAR_REAL[743]		VOL_STEP_43 // Empty machine	REAL	750,7	
1744	PAR_REAL[744]		VOL_STEP_44 // Empty machine to reclaim	REAL	435	
1745	PAR_REAL[745]		VOL_STEP_45 // Rinse machine	REAL	120	
1746	PAR_REAL[746]		VOL_STEP_46 //	REAL	100	
1747	PAR_REAL[747]		VOL_STEP_47 //	REAL	100	
1748	PAR_REAL[748]		VOL_STEP_48 //	REAL	100	
1749	PAR_REAL[749]		VOL_STEP_49 //	REAL	0	
1750	PAR_REAL[750]		VOL_STEP_50 //	REAL	0	
1751	PAR_REAL[751]		VOL_STEP_51 // VOL_STEP 51 WAITING FOR METERING	REAL	0	
1752	PAR_REAL[752]		VOL_STEP_52 // VOL_STEP 52 CAUSTIC DOSING see PAR_REAL 666-667	REAL	1075,7	
1753	PAR_REAL[753]		VOL_STEP_53 // VOL_STEP 53 CAUSTIC CIRCULATION	REAL	0	
1754	PAR_REAL[754]		VOL_STEP_54 // VOL_STEP 54 BTD EMPTYING	REAL	0	
1755	PAR_REAL[755]		VOL_STEP_55 // VOL_STEP 55 RINSING	REAL	975,7	
1756	PAR_REAL[756]		VOL_STEP_56 //	REAL	0	
1757	PAR_REAL[757]		VOL_STEP_57 // VOL_STEP 57 ACID DOSING see PAR_REAL 666-667	REAL	975,7	
1758	PAR_REAL[758]		VOL_STEP_58 //	REAL	0	
1759	PAR_REAL[759]		VOL_STEP_59 //	REAL	0	
1760	PAR_REAL[760]		VOL_STEP_60 // VOL_STEP 60 ACID CIRCULATION see PAR_REAL 666-667	REAL	0	
1761	PAR_REAL[761]		VOL_STEP_61 // VOL_STEP 61 BTD EMPTYING	REAL	0	
1762	PAR_REAL[762]		VOL_STEP_62 // VOL_STEP 62 RINSING see PAR_REAL 666-667	REAL	975,7	
1763	PAR_REAL[763]		VOL_STEP_63 //	REAL	0	
1764	PAR_REAL[764]		VOL_STEP_64 //	REAL	0	
1765	PAR_REAL[765]		VOL_STEP_65 //	REAL	0	
1766	PAR_REAL[766]		VOL_STEP_66 //	REAL	0	
1767	PAR_REAL[767]		VOL_STEP_67 //	REAL	0	
1768	PAR_REAL[768]		VOL_STEP_68 //	REAL	0	
1769	PAR_REAL[769]		VOL_STEP_69 //	REAL	0	

Rev.	Date/ Sign.	Description

Tetra Therm Aseptic VTIS
T5844130774
Parameter list

Doc.type:

Dept.	Design/Drawn	Template doc. rev.	Date	Revision
BU DBF	**TOJ/**	**1.00.30**	**2016-09-28**	**-**

Tetra Pak
LUND **SWEDEN**
PLCP5844130774

This document and its content are our exclusive property and must not be copied, reproduced, transmitted or communicated to any other party or used for purposes not expressly permitted by us. Only to the extent expressly agreed by us this document may constitute a contractual obligation on our part.

Program parameter list.

Reg. No	Address	Symbol	Description	Unit:	Original	Changed
1770	PAR_REAL[770]		VOL_STEP_70 // VOL_STEP 70 BTD EMPTYING	REAL	0	
1771	PAR_REAL[771]		VOL_STEP_71 // VOL_STEP 71 RINSING	REAL	0	
1772	PAR_REAL[772]		VOL_STEP_72 //	REAL	0	
1773	PAR_REAL[773]		VOL_STEP_73 //	REAL	0	
1774	PAR_REAL[774]		VOL_STEP_74 //	REAL	0	
1775	PAR_REAL[775]		VOL_STEP_75 //	REAL	0	
1776	PAR_REAL[776]		VOL_STEP_76 //	REAL	0	
1777	PAR_REAL[777]		VOL_STEP_77 //	REAL	0	
1778	PAR_REAL[778]		VOL_STEP_78 //	REAL	0	
1779	PAR_REAL[779]		VOL_STEP_79 //	REAL	0	
1780	PAR_REAL[780]		VOL_STEP_80 // Step 80 Activate valves	REAL	0	
1781	PAR_REAL[781]		VOL_STEP_81 // Step 81 Activate motors / Empty tank line	REAL	0	
1782	PAR_REAL[782]		VOL_STEP_82 // Step 82 Empty supply line	REAL	0	
1783	PAR_REAL[783]		VOL_STEP_83 // Step 83 Empty BTD	REAL	0	
1784	PAR_REAL[784]		VOL_STEP_84 // Step 84 Empty to reclaim	REAL	1185,7	
1785	PAR_REAL[785]		VOL_STEP_85 // Step 85 Rinsing	REAL	120	
1786	PAR_REAL[786]		VOL_STEP_86 //	REAL	0	
1787	PAR_REAL[787]		VOL_STEP_87 //	REAL	0	
1788	PAR_REAL[788]		VOL_STEP_88 //	REAL	0	
1789	PAR_REAL[789]		VOL_STEP_89 //	REAL	0	
1790	PAR_REAL[790]		VOL_STEP_90 //	REAL	0	
1791	PAR_REAL[791]		VOL_STEP_91 //	REAL	0	
1792	PAR_REAL[792]		VOL_STEP_92 //	REAL	0	
1793	PAR_REAL[793]		VOL_STEP_93 //	REAL	0	
1794	PAR_REAL[794]		VOL_STEP_94 //	REAL	0	
1795	PAR_REAL[795]		VOL_STEP_95 //	REAL	0	
1796	PAR_REAL[796]		VOL_STEP_96 //	REAL	0	
1797	PAR_REAL[797]		VOL_STEP_97 //	REAL	0	
1798	PAR_REAL[798]		VOL_STEP_98 //	REAL	0	
1799	PAR_REAL[799]		VOL_STEP_99 //	REAL	0	
1800	PAR_REAL[800]		VOL_STEP_100 //	REAL	0	
1801	PAR_REAL[801]		VOL_STEP_101 // VOL_STEP 101 ACT. VALVES	REAL	0	
1802	PAR_REAL[802]		VOL_STEP_102 // VOL_STEP 102 ACT. PUMPS	REAL	0	
1803	PAR_REAL[803]		VOL_STEP_103 // VOL_STEP 103 FILL UP PLANT see PAR_REAL 666-667	REAL	487,85	
1804	PAR_REAL[804]		VOL_STEP_104 // VOL_STEP 104 ACT. STEAM	REAL	0	

Rev.	Date/ Sign.	Description

Tetra Therm Aseptic VTIS
T5844130774
Parameter list

Doc.type:

Dept.	Design/Drawn	Template doc. rev.	Date	Revision
BU DBF	**TOJ/**	**1.00.30**	**2016-09-28**	**-**

Tetra Pak
LUND **SWEDEN**
PLCP5844130774

This document and its content are our exclusive property and must not be copied, reproduced, transmitted or communicated to any other party or used for purposes not expressly permitted by us. Only to the extent expressly agreed by us this document may constitute a contractual obligation on our part.

Program parameter list.

Reg. No	Address	Symbol	Description	Unit:	Original	Changed
1805	PAR_REAL[805]		VOL_STEP_105 //	REAL	0	
1806	PAR_REAL[806]		VOL_STEP_106 //	REAL	0	
1807	PAR_REAL[807]		VOL_STEP_107 //	REAL	0	
1808	PAR_REAL[808]		VOL_STEP_108 //	REAL	0	
1809	PAR_REAL[809]		VOL_STEP_109 //	REAL	0	
1810	PAR_REAL[810]		VOL_STEP_110 //	REAL	0	
1811	PAR_REAL[811]		VOL_STEP_111 // VOL_STEP 111 RINSING 1 see PAR_REAL 666-667	REAL	975,7	
1812	PAR_REAL[812]		VOL_STEP_112 // VOL_STEP 112 WAITING FOR METERING	REAL	0	
1813	PAR_REAL[813]		VOL_STEP_113 // VOL_STEP 113 CAUSTIC VOL_STEP DOSING	REAL	1075,7	
1814	PAR_REAL[814]		VOL_STEP_114 // VOL_STEP 114 CAUSTIC CIRCULATION	REAL	0	
1815	PAR_REAL[815]		VOL_STEP_115 // VOL_STEP 115 BTD EMPTYING	REAL	0	
1816	PAR_REAL[816]		VOL_STEP_116 //	REAL	0	
1817	PAR_REAL[817]		VOL_STEP_117 //	REAL	0	
1818	PAR_REAL[818]		VOL_STEP_118 //	REAL	0	
1819	PAR_REAL[819]		VOL_STEP_119 //	REAL	0	
1820	PAR_REAL[820]		VOL_STEP_120 //	REAL	0	
1821	PAR_REAL[821]		VOL_STEP_121 // VOL_STEP 121 RINSING + METERING see PAR_REAL 666-667	REAL	975,7	
1822	PAR_REAL[822]		VOL_STEP_122 // VOL_STEP 122 RELEASE VACUUM	REAL	0	
1823	PAR_REAL[823]		VOL_STEP_123 // VOL_STEP 123 WAITING FOR METERING	REAL	0	
1824	PAR_REAL[824]		VOL_STEP_124 // VOL_STEP 124 ACID DOSING see PAR_REAL 666-667	REAL	1075,7	
1825	PAR_REAL[825]		VOL_STEP_125 // VOL_STEP 125 ACID CIRCULATION	REAL	0	
1826	PAR_REAL[826]		VOL_STEP_126 // VOL_STEP 126 BTD EMPTYING	REAL	0	
1827	PAR_REAL[827]		VOL_STEP_127 //	REAL	0	
1828	PAR_REAL[828]		VOL_STEP_128 //	REAL	0	
1829	PAR_REAL[829]		VOL_STEP_129 //	REAL	0	
1830	PAR_REAL[830]		VOL_STEP_130 //	REAL	0	
1831	PAR_REAL[831]		VOL_STEP_131 // VOL_STEP 131 RINSING + METERING see PAR_REAL 666-667	REAL	990,7	
1832	PAR_REAL[832]		VOL_STEP_132 // VOL_STEP 132 WAITING FOR METERING	REAL	0	
1833	PAR_REAL[833]		VOL_STEP_133 // VOL_STEP 133 CAUSTIC DOSING see PAR_REAL 666-667	REAL	1090,7	
1834	PAR_REAL[834]		VOL_STEP_134 // VOL_STEP 134 CAUSTIC CIRCULATION	REAL	0	
1835	PAR_REAL[835]		VOL_STEP_135 // VOL_STEP 135 BTD EMPTYING	REAL	0	
1836	PAR_REAL[836]		VOL_STEP_136 // VOL_STEP 136 RINSE + METERING see PAR_REAL 666-667	REAL	990,7	
1837	PAR_REAL[837]		VOL_STEP_137 //	REAL	0	
1838	PAR_REAL[838]		VOL_STEP_138 //	REAL	0	
1839	PAR_REAL[839]		VOL_STEP_139 //	REAL	0	

Rev.	Date/ Sign.	Description

Tetra Therm Aseptic VTIS
T5844130774
Parameter list

Tetra Pak
LUND **SWEDEN**

Doc.type:					
Dept.	Design/Drawn	Template doc. rev.	Date	Revision	
BU DBF	**TOJ/**	**1.00.30**	**2016-09-28**	**-**	**PLCP5844130774**

This document and its content are our exclusive property and must not be copied, reproduced, transmitted or communicated to any other party or used for purposes not expressly permitted by us. Only to the extent expressly agreed by us this document may constitute a contractual obligation on our part.

Program parameter list.

Reg. No	Address	Symbol	Description	Unit:	Original	Changed
1840	PAR_REAL[840]		VOL_STEP_140 //	REAL	0	
1841	PAR_REAL[841]		VOL_STEP_141 // VOL_STEP 141 RINSING + METERING see PAR_REAL 666-667	REAL	990,7	
1842	PAR_REAL[842]		VOL_STEP_142 // VOL_STEP 142 WAITING FOR METERING	REAL	0	
1843	PAR_REAL[843]		VOL_STEP_143 // VOL_STEP 143 ACID DOSING see PAR_REAL 666-667	REAL	1090,7	
1844	PAR_REAL[844]		VOL_STEP_144 // VOL_STEP 144 ACID CIRCULATION LT	REAL	0	
1845	PAR_REAL[845]		VOL_STEP_145 // VOL_STEP 145 ACID CIRCULATION HT	REAL	0	
1846	PAR_REAL[846]		VOL_STEP_146 // VOL_STEP 146 BTD EMPTYING	REAL	600	
1847	PAR_REAL[847]		VOL_STEP_147 // VOL_STEP 147 RINSING HT see PAR_REAL 666-667	REAL	700	
1848	PAR_REAL[848]		VOL_STEP_148 // VOL_STEP 148 RINSING LT	REAL	990,7	
1849	PAR_REAL[849]		VOL_STEP_149 // VOL_STEP 149 RINSING	REAL	1981,4	
1850	PAR_REAL[850]		VOL_STEP_150 //	REAL	0	
1851	PAR_REAL[851]		VOL_STEP_151 //	REAL	0	
1852	PAR_REAL[852]		VOL_STEP_152 //	REAL	0	
1853	PAR_REAL[853]		VOL_STEP_153 //	REAL	0	
1854	PAR_REAL[854]		VOL_STEP_154 //	REAL	0	
1855	PAR_REAL[855]		VOL_STEP_155 //	REAL	0	
1856	PAR_REAL[856]		VOL_STEP_156 //	REAL	0	
1857	PAR_REAL[857]		VOL_STEP_157 //	REAL	0	
1858	PAR_REAL[858]		VOL_STEP_158 //	REAL	0	
1859	PAR_REAL[859]		VOL_STEP_159 //	REAL	0	
1860	PAR_REAL[860]		EXTR_DOST52 // Extra dosing to drain step 52	REAL	100	
1861	PAR_REAL[861]		EXTR_DOSTxx // Extra dosing to drain step xx	REAL	0	
1862	PAR_REAL[862]		EXTR_DOST113 // Extra dosing to drain step 113	REAL	100	
1863	PAR_REAL[863]		EXTR_DOST124 // Extra dosing to drain step 124	REAL	100	
1864	PAR_REAL[864]		EXTR_DOST133 // Extra dosing to drain step 133	REAL	100	
1865	PAR_REAL[865]		EXTR_DOST143 // Extra dosing to drain step 143	REAL	100	
1866	PAR_REAL[866]		ACT_EXTR_VOL_DOS // Actual extra volume in dosing	REAL	0	
1867	PAR_REAL[867]		SP_ACT_V75_DOS // Set point volume act V75 in dosing.	REAL	990,7	
1868	PAR_REAL[868]		VOLUME_M // M = volume from V71/QT78 out to first AFM/Alsafe (only used if option for V71/QT78)	REAL	0	
1869	PAR_REAL[869]		VOLUME_N // N = volume from first AFM/Alsafe back to V71 (only used if option for V71)	REAL	0	
1870	PAR_REAL[870]		S_VOLUME_SC // Spray condense	REAL	20	
1871	PAR_REAL[871]		SAFETY_B_UP_EMPTY // Back up constant emptying steps 100 = 100%	REAL	95	
1872	PAR_REAL[872]		SAFETY_B_UP_FILL // Back up constant Filling steps 100 = 100%	REAL	105	
1873	PAR_REAL[873]		SAFETY_BACK_UP_W // Back up constant water steps 100 = 100%	REAL	100	
1874	PAR_REAL[874]		DLY_TIM_VCL_ALSAFE // Delay time in Alsafe for open VCL default 80s	REAL	8	

Rev.	Date/ Sign.	Description

Tetra Therm Aseptic VTIS
T5844130774
Parameter list
Doc.type:

Dept.	Design/Drawn	Template doc. rev.	Date	Revision
BU DBF	**TOJ/**	**1.00.30**	**2016-09-28**	**-**

Tetra Pak
LUND **SWEDEN**
PLCP5844130774

This document and its content are our exclusive property and must not be copied, reproduced, transmitted or communicated to any other party or used for purposes not expressly permitted by us. Only to the extent expressly agreed by us this document may constitute a contractual obligation on our part.

Program parameter list.

Reg. No	Address	Symbol	Description	Unit:	Original	Changed
1875	PAR_REAL[875]		GAIN_FILL_UP_VOL // Gain faktor fill up vol G *(A + B) [100 = 100%] (min 50 - max 200 in TPOP)	REAL	50	
1876	PAR_REAL[876]		GAIN_RINSE_CIP_VOL // Gain faktor rinse vol G *(A + B) [100 = 100%]	REAL	100	
1877	PAR_REAL[877]		Spare //	REAL	0	
1878	PAR_REAL[878]		DlyTimeVclA1 // Delay time for cooling Valve cluster A1	REAL	8	
1879	PAR_REAL[879]		DlyTimeVclA2 // Delay time for cooling Valve cluster A2	REAL	8	
1880	PAR_REAL[880]		DlyTimeVclA3 // Delay time for cooling Valve cluster A3	REAL	8	
1881	PAR_REAL[881]		F0_MinTemp_Sp_Rmp_Step // F0:INCREASE AND DECREASE STEP FOR RAMP BLOCK	REAL	0,1	
1882	PAR_REAL[882]		F0_Spare // F0:	REAL	30	
1883	PAR_REAL[883]		F0_MinTemp_Max // F0:MAX OUTPUT FOR RAMP BLOCK	REAL	160	
1884	PAR_REAL[884]		F0_MinTemp_Min // F0:MAX OUTPUT FOR RAMP BLOCK	REAL	0	
1885	PAR_REAL[885]		HC_Stab_Efficiency // F0	REAL	100	
1886	PAR_REAL[886]		HC2_Efficiency // F0	REAL	100	
1887	PAR_REAL[887]		HC3_Efficiency // F0	REAL	100	
1888	PAR_REAL[888]		HC1_Efficiency // F0	REAL	100	
1889	PAR_REAL[889]		HC4_Efficiency // F0	REAL	100	
1890	PAR_REAL[890]		HC5_Efficiency // F0	REAL	100	
1891	PAR_REAL[891]		TS_Spare // Step condition temperature Spare SP1	REAL	95	
1892	PAR_REAL[892]		TS_Spare // Step condition temperature Spare SP2	REAL	5	
1893	PAR_REAL[893]		TS_Spare // Step condition temperature Spare SP3	REAL	10	
1894	PAR_REAL[894]		TS_Spare // Step condition temperature Spare SP4	REAL	80	
1895	PAR_REAL[895]		TS64_Maxi_Goto10 // Step condition temperature SP5	REAL	0	
1896	PAR_REAL[896]		TS06_Maxi_Goto11 // Step condition temperature SP6	REAL	0	
1897	PAR_REAL[897]		TS71_Maxi_Goto12 // Step condition temperature SP7	REAL	0	
1898	PAR_REAL[898]		TS31_Vtis_Goto10 // Step condition temperature SP8	REAL	110	
1899	PAR_REAL[899]		TS06_Vtis_Goto11 // Step condition temperature SP9	REAL	95	
1900	PAR_REAL[900]		TS71_Vtis_Goto12 // Step condition temperature SP10	REAL	93	
1901	PAR_REAL[901]		TS44_FLEX GOTO203 // Step condition temperature SP11	REAL	75	
1902	PAR_REAL[902]		TS331_VTIS_GOTO 5 // Step condition temperature SP12	REAL	110	
1903	PAR_REAL[903]		TS_Spare // Step condition temperature SP13	REAL	0	
1904	PAR_REAL[904]		TS_Spare // Step condition temperature SP14	REAL	0	
1905	PAR_REAL[905]		TS04_Flex_Goto_LTCIP // Step condition temperature SP15	REAL	105	
1906	PAR_REAL[906]		TS06_Goto22_24 // Step condition temperature SP16	REAL	30	
1907	PAR_REAL[907]		V74_SHUT_D //	REAL	10	
1908	PAR_REAL[908]		V74_H_CIP //	REAL	5	
1909	PAR_REAL[909]		V74_L_CIP //	REAL	5	

Rev.	Date/ Sign.	Description

Tetra Therm Aseptic VTIS
T5844130774
Parameter list

Doc.type:

Dept.	Design/Drawn	Template doc. rev.	Date	Revision
BU DBF	**TOJ/**	**1.00.30**	**2016-09-28**	**-**

Tetra Pak
LUND **SWEDEN**
PLCP5844130774

This document and its content are our exclusive property and must not be copied, reproduced, transmitted or communicated to any other party or used for purposes not expressly permitted by us. Only to the extent expressly agreed by us this document may constitute a contractual obligation on our part.

Program parameter list.

Reg. No	Address	Symbol	Description	Unit:	Original	Changed
1910	PAR_REAL[910]		V74_PRE_1_6 //	REAL	45	
1911	PAR_REAL[911]		V74_7_11 //	REAL	40	
1912	PAR_REAL[912]		V74_HIBERNATION // HIBERNATION	REAL	20	
1913	PAR_REAL[913]		V74_INC_DEC_STEP // INCREASE AND DECREASE STEP FOR SELECTION BLOCK	REAL	1	
1914	PAR_REAL[914]		V74_Spare //	REAL	1	
1915	PAR_REAL[915]		V74_START_VALUE // START VALUE FOR RAMP BLOCK	REAL	0	
1916	PAR_REAL[916]		V74_MAX // MAX OUTPUT FOR RAMP BLOCK NOT USED IN LOGIX	REAL	100	
1917	PAR_REAL[917]		V74_MIN // MAX OUTPUT FOR RAMP BLOCK NOT USED IN LOGIX	REAL	0	
1918	PAR_REAL[918]		V74_Spare //	REAL	0	
1919	PAR_REAL[919]		V78_SHUT_D //	REAL	25	
1920	PAR_REAL[920]		V78_H_CIP //	REAL	35	
1921	PAR_REAL[921]		V78_L_CIP //	REAL	0	
1922	PAR_REAL[922]		V78_PRE_1_6 //	REAL	40	
1923	PAR_REAL[923]		V78_7_11	REAL	50	
1924	PAR_REAL[924]		V78_HIBERNATION // HIBERNATION	REAL	60	
1925	PAR_REAL[925]		V78_INC_DEC_STEP // INCREASE AND DECREASE STEP FOR SELECTION BLOCK	REAL	1	
1926	PAR_REAL[926]		V78_Spare //	REAL	1	
1927	PAR_REAL[927]		V78_START_VALUE // START VALUE FOR RAMP BLOCK	REAL	0	
1928	PAR_REAL[928]		V78_MAX // MAX OUTPUT FOR RAMP BLOCK NOT USED IN LOGIX	REAL	100	
1929	PAR_REAL[929]		V78_MIN // MAX OUTPUT FOR RAMP BLOCK NOT USED IN LOGIX	REAL	0	
1930	PAR_REAL[930]		V78_Spare //	REAL	0	
1931	PAR_REAL[931]		Spare //	REAL	0	
1932	PAR_REAL[932]		Spare //	REAL	0	
1933	PAR_REAL[933]		Spare //	REAL	0	
1934	PAR_REAL[934]		Spare //	REAL	0	
1935	PAR_REAL[935]		Spare //	REAL	0	
1936	PAR_REAL[936]		Afm1C1 // AFM 1 Capacity 1	REAL	1500	
1937	PAR_REAL[937]		Afm1C2 // AFM 1 Capacity 2	REAL	6000	
1938	PAR_REAL[938]		Afm1C3 // AFM 1 Capacity 3	REAL	0	
1939	PAR_REAL[939]		Afm1C4 // AFM 1 Capacity 4	REAL	0	
1940	PAR_REAL[940]		Afm1ExtCap // AFM 1 Extra capacity	REAL	300	
1941	PAR_REAL[941]		Afm2C1 // AFM 2 Capacity 1	REAL	6000	
1942	PAR_REAL[942]		Afm2C2 // AFM 2 Capacity 2	REAL	0	
1943	PAR_REAL[943]		Afm2C3 // AFM 2 Capacity 3	REAL	0	
1944	PAR_REAL[944]		Afm2C4 // AFM 2 Capacity 4	REAL	0	

Rev.	Date/ Sign.	Description

Tetra Therm Aseptic VTIS
T5844130774
Parameter list

Doc.type:

Dept.	Design/Drawn	Template doc. rev.	Date	Revision
BU DBF	**TOJ/**	**1.00.30**	**2016-09-28**	**-**

Tetra Pak
LUND **SWEDEN**
PLCP5844130774

This document and its content are our exclusive property and must not be copied, reproduced, transmitted or communicated to any other party or used for purposes not expressly permitted by us. Only to the extent expressly agreed by us this document may constitute a contractual obligation on our part.

Program parameter list.

Reg. No	Address	Symbol	Description	Unit:	Original	Changed
1945	PAR_REAL[945]		Afm2ExtCap // AFM 2 Extra capacity	REAL	210	
1946	PAR_REAL[946]		Afm3C1 // AFM 3 Capacity 1	REAL	1500	
1947	PAR_REAL[947]		Afm3C2 // AFM 3 Capacity 2	REAL	2500	
1948	PAR_REAL[948]		Afm3C3 // AFM 3 Capacity 3	REAL	0	
1949	PAR_REAL[949]		Afm3C4 // AFM 3 Capacity 4	REAL	0	
1950	PAR_REAL[950]		Afm3ExtCap // AFM 3 Extra capacity	REAL	202	
1951	PAR_REAL[951]		Afm4C1 // AFM 4 Capacity 1	REAL	8000	
1952	PAR_REAL[952]		Afm4C2 // AFM 4 Capacity 2	REAL	0	
1953	PAR_REAL[953]		Afm4C3 // AFM 4 Capacity 3	REAL	0	
1954	PAR_REAL[954]		Afm4C4 // AFM 4 Capacity 4	REAL	0	
1955	PAR_REAL[955]		Afm4ExtCap // AFM 4 Extra capacity	REAL	300	
1956	PAR_REAL[956]		Afm5C1 // AFM 5 Capacity 1	REAL	0	
1957	PAR_REAL[957]		Afm5C2 // AFM 5 Capacity 2	REAL	0	
1958	PAR_REAL[958]		Afm5C3 // AFM 5 Capacity 3	REAL	0	
1959	PAR_REAL[959]		Afm5C4 // AFM 5 Capacity 4	REAL	0	
1960	PAR_REAL[960]		Afm5ExtCap // AFM 5 Extra capacity	REAL	0	
1961	PAR_REAL[961]		Afm6C1 // AFM 6 Capacity 1	REAL	0	
1962	PAR_REAL[962]		Afm6C2 // AFM 6 Capacity 2	REAL	0	
1963	PAR_REAL[963]		Afm6C3 // AFM 6 Capacity 3	REAL	0	
1964	PAR_REAL[964]		Afm6C4 // AFM 6 Capacity 4	REAL	0	
1965	PAR_REAL[965]		Afm6ExtCap // AFM 6 Extra capacity	REAL	0	
1966	PAR_REAL[966]		M2_spare	REAL	0	
1967	PAR_REAL[967]		M2_spare	REAL	0	
1968	PAR_REAL[968]		M2_spare	REAL	0	
1969	PAR_REAL[969]		M2_spare	REAL	0	
1970	PAR_REAL[970]		M2_spare	REAL	0	
1971	PAR_REAL[971]		V74_spare	REAL	0	
1972	PAR_REAL[972]		V74_spare	REAL	0	
1973	PAR_REAL[973]		V74_spare	REAL	0	
1974	PAR_REAL[974]		V74_spare	REAL	0	
1975	PAR_REAL[975]		Spare //	REAL	0	
1976	PAR_REAL[976]		V78_spare	REAL	0	
1977	PAR_REAL[977]		V78_spare	REAL	0	
1978	PAR_REAL[978]		V78_spare	REAL	0	
1979	PAR_REAL[979]		V78_spare	REAL	0	

Rev.	Date/ Sign.	Description

Tetra Therm Aseptic VTIS
T5844130774
Parameter list

Tetra Pak
LUND **SWEDEN**

Doc.type:					
Dept.	Design/Drawn	Template doc. rev.	Date	Revision	
BU DBF	**TOJ/**	**1.00.30**	**2016-09-28**	**-**	**PLCP5844130774**

This document and its content are our exclusive property and must not be copied, reproduced, transmitted or communicated to any other party or used for purposes not expressly permitted by us. Only to the extent expressly agreed by us this document may constitute a contractual obligation on our part.

Program parameter list.

Reg. No	Address	Symbol	Description	Unit:	Original	Changed
1980	PAR_REAL[980]		Spare //	REAL	0.0	
1981	PAR_REAL[981]		Spare //	REAL	0.0	
1982	PAR_REAL[982]		Spare //	REAL	0.0	
1983	PAR_REAL[983]		Spare //	REAL	0.0	
1984	PAR_REAL[984]		Spare //	REAL	0.0	
1985	PAR_REAL[985]		Spare //	REAL	0.0	
1986	PAR_REAL[986]		Spare //	REAL	0.0	
1987	PAR_REAL[987]		V73_SHUT_D //	REAL	44.0	
1988	PAR_REAL[988]		V73_H_CIP //	REAL	40.0	
1989	PAR_REAL[989]		V73_L_CIP //	REAL	50.0	
1990	PAR_REAL[990]		V73_PRE_1_6 //	REAL	30.0	
1991	PAR_REAL[991]		V73_7_11 //	REAL	33.0	
1992	PAR_REAL[992]		V73_HIBERNATION // HIBERNATION	REAL	33.0	
1993	PAR_REAL[993]		V73_INC_DEC_STEP // INCREASE AND DECREASE STEP FOR SELECTION BLOCK	REAL	1.0	
1994	PAR_REAL[994]		V73_Spare //	REAL	0.0	
1995	PAR_REAL[995]		V73_START_VALUE // START VALUE FOR RAMP BLOCK	REAL	0.0	
1996	PAR_REAL[996]		V73_MAX // MAX OUTPUT FOR RAMP BLOCK NOT USED IN LOGIX	REAL	0.0	
1997	PAR_REAL[997]		V73_MIN // MAX OUTPUT FOR RAMP BLOCK NOT USED IN LOGIX	REAL	0.0	
1998	PAR_REAL[998]		Spare //	REAL	0.0	
1999	PAR_REAL[999]		Spare //	REAL	0.0	
2000						
2001						
2002						
2003						
2004						
2005						
2006						
2007						
2008						
2009						
2010						
2011						
2012						
2013						
2014						

Rev.	Date/ Sign.	Description

Tetra Therm Aseptic VTIS
T5844130774
Parameter list

Doc.type:

Dept.	Design/Drawn	Template doc. rev.	Date	Revision
BU DBF	**TOJ/**	**1.00.30**	**2016-09-28**	**-**

Tetra Pak
LUND **SWEDEN**
PLCP5844130774

This document and its content are our exclusive property and must not be copied, reproduced, transmitted or communicated to any other party or used for purposes not expressly permitted by us. Only to the extent expressly agreed by us this document may constitute a contractual obligation on our part.

Product recipe list.

Recipe #

#	Name	Description	Used in mode	Unit:	Original	Changed
0	Material_ID	500 = Milk 13%, 501= XX,	Common	#		
1	PB_SelectionIdle	Bit code for selected equipment in idle - This must be the same when changing recipe in step 17	Common	#	64	
2	PB_SelectionRun	Bit code for selected equipment - Equipment that can be changed flying, E.g Cooler 1	Common	#	0	
3	PID_Recipe	PID recipe 4 - 9 reserved for production. (Recipe 1 presterilisation, Recipe 2 CIP)	Common	# 4 - 9	4	
4	TherminalExpansion	Compensation for flow in HC normaly 6%	Common	%	6	
5	VolumeAddedBySteam	Compensation for flow in HC only for direct system, normaly 12%	Vtis/Plus	%	12	
6	TSL42	Holding cell temperature guard	Common	°C	3	
7	FlowGuard	Flow deviation / HC time alarm	Common	%	5	
8	TSL830	Steam barrier M6	Common	°C	95	
9	TSL831	Steam barrier M6	Common	°C	95	
10	LevelGuardVessel	Level deviation Deaerator / Flash vessel (option in TA Flex)	Common	%	90	
11	PSL61	Diffpressure product / water (option)	Common	bar	0.5	
12	PSL62	Diffpressure product / water (option)	Common	bar	0.5	
13	PSL63	Diffpressure product / water (option)	Common	bar	0.5	
14	PSL64	Diffpressure product / water (option)	Common	bar	0.5	
15	PSL65	Diffpressure product / water (option)	Common	bar	0.5	
16	PSL67	Diffpressure product / water (option)	Common	bar	0.5	
17	MinSPHCTemp	Minimum setpoint HC temp when F0 compensation °C	Common	°C	135.0	
18	AddTempHC	°C Extra temp HC filling/emptying - TC44	Common	°C	0.0	
19	TSH6	Outlet destination temperature guard	Common	°C	95.0	
20	ReqConcLye	Requested CIP concentration lye	Common	%	1.8	
21	ReqConcAcid	Requested CIP concentration acid	Common	%	1.5	
22	SavedParRec	Saved Parameter Recipe nr for Recipe Manager	Common	# 1 - 39	1.0	
23	Spare5		Common			
24	CIP_Temp_TSL71	CIP circulation temp	Common	°C	45	
25	PSL827	Homogeniser stage 1 pressure guard option	Common	bar	200.0	
26	PSH827	Homogeniser stage 1 pressure guard option	Common	bar	255.0	
27	GRD_Spare4					
28	Spare6					
29	Spare7					
30	TC26	Extra cooler 1, Option	Common	°C	20	
31	TC36	Extra cooler 2, Option	Common	°C	5	
32	TC63	Return cooler BTD	Common	°C	85	
33	TC60	Intermediate cooler TA PLUS	TA PLUS	°C	107	
34	Con_Spare1					

Rev.	Date/ Sign.	Description

Tetra Therm Aseptic VTIS
T5844130774
Recipe

Doc.type: PROGRAM RECIPE LIST

Dept.	Design/Drawn	Template doc. rev.	Date	Revision
BU DBF	**TOJ/**	**1.00.13**	**2016-09-28**	**-**

Tetra Pak
LUND **SWEDEN**
PLCRP5844130774

This document and its content are our exclusive property and must not be copied, reproduced, transmitted or communicated to any other party or used for purposes not expressly permitted by us. Only to the extent expressly agreed by us this document may constitute a contractual obligation on our part.

Product recipe list.

Recipe #

Reg.	Name	Description	Used in	Unit:	Original	Changed
35	Con_Spare2					
36	Con_Spare3					
37	Con_Spare4					
38	PC827	Homogeniser pressure stage 1, Option	Common	bar	250	
39	PC827_2	Homogeniser pressure stage 2, Option	Common	bar	50	
40	HomoStage1	Analog setting homogeniser stage 1, (0 - 100%), Option	Common	%	60	
41	HomoStage2	Analog setting homogeniser stage 2, (0 - 100%), Option	Common	%	40	
42	M4_Cap1_Spare	Cap 1 analog fixed setting speed M4, (0-100%) not used		%	80	
43	M4_Cap2_Spare	Cap 2 analog fixed setting speed M4, (0-100%) not used		%	70	
44	M4_Cap3_Spare	Cap 3 analog fixed setting speed M4, (0-100%) not used		%	60	
45	M4_Cap4_Spare	Cap 4 analog fixed setting speed M4, (0-100%) not used		%	50	
46	M4_Cap5_Spare	Cap 5 analog fixed setting speed M4, (0-100%) not used		%	45	
47	M4_Cap6_Spare	Cap 6 analog fixed setting speed M4, (0-100%) not used		%	40	
48	M4_RampSpeed_Spare	Ramping rate, greater value gives faster ramping. Value added / subtracted per second in ramp.		% / sec	0.2	
49	M4_Spare					
50	V74_Cap1	Cap 1 analog fixed setting V74, (0-100%)	Common	%	78.0	
51	V74_Cap2	Cap 2 analog fixed setting V74, (0-100%)	Common	%	70.0	
52	V74_Cap3	Cap 3 analog fixed setting V74, (0-100%)	Common	%	60.0	
53	V74_Cap4	Cap 4 analog fixed setting V74, (0-100%)	Common	%	55.0	
54	V74_Cap5	Cap 5 analog fixed setting V74, (0-100%)	Common	%	50.0	
55	V74_Cap6	Cap 6 analog fixed setting V74, (0-100%)	Common	%	45.0	
56	V74_RampSpeed	Ramping rate, greater value gives faster ramping. Value added / subtracted per second in ramp.	Common	% / sec	0.2	
57	V74_Spare1					
58	V74_Spare2					
59	V74_Spare3					
60	V78_Cap1	Cap 1 analog fixed setting V78, (0-100%)	Common	%	80.0	
61	V78_Cap2	Cap 2 analog fixed setting V78, (0-100%)	Common	%	75.0	
62	V78_Cap3	Cap 3 analog fixed setting V78, (0-100%)	Common	%	70.0	
63	V78_Cap4	Cap 4 analog fixed setting V78, (0-100%)	Common	%	60.0	
64	V78_Cap5	Cap 5 analog fixed setting V78, (0-100%)	Common	%	50.0	
65	V78_Cap6	Cap 6 analog fixed setting V78, (0-100%)	Common	%	45.0	
66	V78_RampSpeed	Ramping rate, greater value gives faster ramping. Value added / subtracted per second in ramp.	Common	% / sec	0.2	
67	V78_Spare1					
68	V78_Spare2					
69	V78_Spare3					

Rev.	Date/ Sign.	Description
0	0	
0		
0		
0		
0		

Tetra Therm Aseptic VTIS

Recipe

Doc.type: PROGRAM RECIPE LIST

Dept.	Design/Drawn	Template doc. rev.	Date	Revision
BU DBF	**TOJ/**	**1.00.13**	**2016-09-28**	**-**

Tetra Pak

LUND **SWEDEN**

PLCRP5844130774

This document and its content are our exclusive property and must not be copied, reproduced, transmitted or communicated to any other party or used for purposes not expressly permitted by us. Only to the extent expressly agreed by us this document may constitute a contractual obligation on our part.

Product recipe list.

Recipe #

Reg.	Name	Description	Used in	Unit:	Original	Changed
70	V78_Spare4					
71	M10_Cap1	Cap 1 analog fixed setting speed M10, (0-100%)	Flex	%	90.0	
72	M10_Cap2	Cap 2 analog fixed setting speed M10, (0-100%)	Flex	%	80.0	
73	M10_Cap3	Cap 3 analog fixed setting speed M10, (0-100%)	Flex	%	70.0	
74	M10_Cap4	Cap 4 analog fixed setting speed M10, (0-100%)	Flex	%	60.0	
75	M10_Cap5	Cap 5 analog fixed setting speed M10, (0-100%)	Flex	%	50.0	
76	M10_Cap6	Cap 6 analog fixed setting speed M10, (0-100%)	Flex	%	45.0	
77	M10_RampSpeed	Ramping rate, greater value gives faster ramping. Value added / subtracted per second in ramp.	Flex	% / sec	0.2	
150	DryMatterRatio	Temp balance pre heat / flash cooling (TIC44 / TIC31)	Vtis	°C	1.0	
151	VTIS_Spare1					
152	HC_GuardTimeInfuser	Holding cell time set point Infuser, Option	Vtis/Infuser	sec	3.8	
153	LSH504	High level alarm set point Infuser vessel, (0- 100%) Option	Vtis/Infuser	%	90.0	
154	ProductDensity	Density of product, Option	Vtis/Infuser	kg/l	0.96	
155	HC_TimeInfuser	Holding cell time, Option	Vtis/Infuser	sec	4.0	
156	AddTempHC	Extra temp in HC Filling / Emptying, Option	Vtis/Infuser	°C	1.5	
157	P46SP	P46 (STLR) Setpoint Selection 1-5 , Option	US VER	#		
158	AddPercLevelLC504	Extra level in HC Filling / Emptying, Option	Vtis/Infuser	%	2.0	
159	VTIS_Spare6					
160	TC331	Temperature PID controller set point, (0 - 160.0 °C)	Vtis	°C	81.0	
161	TC381	Temperature PID controller set point, (0 - 160.0 °C)	Vtis	°C	30.0	
162	TC44V	Temperature PID controller set point, (0 - 160.0 °C)	Vtis	°C	80.0	
163	TC344	Temperature PID controller set point, (0 - 160.0 °C)	Vtis	°C	140.0	
164	TC544	Temperature PID controller set point, (0 - 160.0 °C) , Option	Vtis/Infuser	°C	140.0	
165	VTIS_Spare7	Temperature PID controller set point, (0 - 160.0 °C)	Vtis	°C		
166	LC305_306	Level PID controller set point, (0 - 100.0 %)	Vtis	°C	60.0	
167	PC330	Pressuer PID controller set point, (0 - 10.0 bar) , Option	Vtis	°C	4.5	
168	PC305	Pressuer PID controller set point, (0 - 10.0 bar) , Option	Vtis	°C	3.2	
169	VTIS_Spare8					
170	M305_Cap1	Cap 1 analog fixed setting speed M305, (0-100%)	Vtis	%	70.0	
171	M305_Cap2	Cap 2 analog fixed setting speed M305, (0-100%)	Vtis	%	65.0	
172	M305_Cap3	Cap 3 analog fixed setting speed M305, (0-100%)	Vtis	%	60.0	
173	M305_Cap4	Cap 4 analog fixed setting speed M305, (0-100%)	Vtis	%	55.0	
174	M305_Cap5	Cap 5 analog fixed setting speed M305, (0-100%)	Vtis	%	50.0	
175	M305_Cap6	Cap 6 analog fixed setting speed M305, (0-100%)	Vtis	%	45.0	
176	M305_RampSpeed	Ramping rate, greater value gives faster ramping. Value added / subtracted per second in ramp.	Vtis	% / sec	0.2	

Rev.	Date/ Sign.	Description
0	0	
0		
0		
0		
0		

Tetra Therm Aseptic VTIS

Recipe

Doc.type: PROGRAM RECIPE LIST

Dept.	Design/Drawn	Template doc. rev.	Date	Revision
BU DBF	**TOJ/**	**1.00.13**	**2016-09-28**	**-**

Tetra Pak

LUND **SWEDEN**

PLCRP5844130774

This document and its content are our exclusive property and must not be copied, reproduced, transmitted or communicated to any other party or used for purposes not expressly permitted by us. Only to the extent expressly agreed by us this document may constitute a contractual obligation on our part.

Product recipe list.

Recipe #

Reg.	Name	Description	Used in	Unit:	Original	Changed
177	M305_Spare1					
178	M305_Spare2					
179	M305_Spare3					
180	M9_Cap1	Cap 1 analog fixed setting speed M9, (0-100%)	Common	%	80.0	
181	M9_Cap2	Cap 2 analog fixed setting speed M9, (0-100%)	Common	%	75.0	
182	M9_Cap3	Cap 3 analog fixed setting speed M9, (0-100%)	Common	%	70.0	
183	M9_Cap4	Cap 4 analog fixed setting speed M9, (0-100%)	Common	%	65.0	
184	M9_Cap5	Cap 5 analog fixed setting speed M9, (0-100%)	Common	%	60.0	
185	M9_Cap6	Cap 6 analog fixed setting speed M9, (0-100%)	Common	%	55.0	
186	M9_RampSpeed	Ramping rate, greater value gives faster ramping. Value added / subtracted per second in ramp.	Common	% / sec	0.2	
187	M9_Spare1					
188	M9_Spare2					
189	M9_Spare3					
190	V330_Cap1	Cap 1 analog fixed setting V330, (0-100%)	Vtis	%	60.0	
191	V330_Cap2	Cap 2 analog fixed setting V330, (0-100%)	Vtis	%	56.0	
192	V330_Cap3	Cap 3 analog fixed setting V330, (0-100%)	Vtis	%	50.0	
193	V330_Cap4	Cap 4 analog fixed setting V330, (0-100%)	Vtis	%	48.0	
194	V330_Cap5	Cap 5 analog fixed setting V330, (0-100%)	Vtis	%	45.0	
195	V330_Cap6	Cap 6 analog fixed setting V330, (0-100%)	Vtis	%	40.0	
196	V330_Hib	Hibernation analog fixed setting V330, (0-100%)	Vtis	%	35.0	
197	V330_RampSpeed	Ramping rate, greater value gives faster ramping. Value added / subtracted per second in ramp.	Vtis	% / sec	0.2	
198	V330_Spare2					
199	V330_Spare3					
200	V354_Cap1	Cap 1 analog fixed setting V354, (0-100%)	Vtis	%	80.0	
201	V354_Cap2	Cap 2 analog fixed setting V354, (0-100%)	Vtis	%	75.0	
202	V354_Cap3	Cap 3 analog fixed setting V354, (0-100%)	Vtis	%	70.0	
203	V354_Cap4	Cap 4 analog fixed setting V354, (0-100%)	Vtis	%	65.0	
204	V354_Cap5	Cap 5 analog fixed setting V354, (0-100%)	Vtis	%	60.0	
205	V354_Cap6	Cap 6 analog fixed setting V354, (0-100%)	Vtis	%	55.0	
206	V354_Hib	Hibernation analog fixed setting V354, (0-100%)	Vtis	%	50.0	
207	V354_RampSpeed	Ramping rate, greater value gives faster ramping. Value added / subtracted per second in ramp.	Vtis	% / sec	0.2	
208	V354_Spare2					
209	V354_Spare3					
210	V540_Cap1	Cap 1 analog fixed setting V540, (0-100%) ,Option	Vtis/Infuser	%	50.0	
211	V540_Cap2	Cap 2 analog fixed setting V540, (0-100%) ,Option	Vtis/Infuser	%	50.0	

Rev.	Date/ Sign.	Description
0	0	
0		
0		
0		
0		

Tetra Therm Aseptic VTIS

Recipe

Doc.type: PROGRAM RECIPE LIST

Dept.	Design/Drawn	Template doc. rev.	Date	Revision
BU DBF	**TOJ/**	**1.00.13**	**2016-09-28**	**-**

Tetra Pak

LUND **SWEDEN**

PLCRP5844130774

This document and its content are our exclusive property and must not be copied, reproduced, transmitted or communicated to any other party or used for purposes not expressly permitted by us. Only to the extent expressly agreed by us this document may constitute a contractual obligation on our part.

Product recipe list.

Recipe #

Reg.	Name	Description	Used in	Unit:	Original	Changed
212	V540_Cap3	Cap 3 analog fixed setting V540, (0-100%) ,Option	Vtis/Infuser	%	50.0	
213	V540_Cap4	Cap 4 analog fixed setting V540, (0-100%) ,Option	Vtis/Infuser	%	50.0	
214	V540_Cap5	Cap 5 analog fixed setting V540, (0-100%) ,Option	Vtis/Infuser	%	50.0	
215	V540_Cap6	Cap 6 analog fixed setting V540, (0-100%) ,Option	Vtis/Infuser	%	50.0	
216	V540_RampSpeed	Ramping rate, greater value gives faster ramping. Value added / subtracted per second in ramp.	Vtis/Infuser	% / sec	1.0	
217	V540_Spare1					
218	V540_Spare2					
219	V540_Spare3					
220	M308_Cap1	Cap 1 analog fixed setting M308, (0-100%) ,Option	Vtis	%	80.0	
221	M308_Cap2	Cap 2 analog fixed setting M308, (0-100%) ,Option	Vtis	%	75.0	
222	M308_Cap3	Cap 3 analog fixed setting M308, (0-100%) ,Option	Vtis	%	70.0	
223	M308_Cap4	Cap 4 analog fixed setting M308, (0-100%) ,Option	Vtis	%	65.0	
224	M308_Cap5	Cap 5 analog fixed setting M308, (0-100%) ,Option	Vtis	%	60.0	
225	M308_Cap6	Cap 6 analog fixed setting M308, (0-100%) ,Option	Vtis	%	55.0	
226	M308_RampSpeed	Ramping rate, greater value gives faster ramping. Value added / subtracted per second in ramp.	Vtis	% / sec	0.2	
227	M308_Spare1					
228	M308_Spare2					
229	M308_Spare3					
230	V73_Cap1	Cap 1 analog fixed setting V73, (0-100%) ,US version	Vtis	%	80.0	
231	V73_Cap2	Cap 2 analog fixed setting V73, (0-100%) ,US version	Vtis	%	75.0	
232	V73_Cap3	Cap 3 analog fixed setting V73, (0-100%) ,US version	Vtis	%	70.0	
233	V73_Cap4	Cap 4 analog fixed setting V73, (0-100%) ,US version	Vtis	%	65.0	
234	V73_Cap5	Cap 5 analog fixed setting V73, (0-100%) ,US version	Vtis	%	60.0	
235	V73_Cap6	Cap 6 analog fixed setting V73, (0-100%) ,US version	Vtis	%	55.0	
236	V73_RampSpeed	Ramping rate, greater value gives faster ramping. Value added / subtracted per second in ramp.	Vtis	% / sec	0.2	
237	V73_Spare1					
238	V73_Spare2					
239	V362_Cap1	Cap 1 analog fixed setting V362, (0-100%)	Vtis	%	80.0	
240	V362_Cap2	Cap 2 analog fixed setting V362, (0-100%)	Vtis	%	75.0	
241	V362_Cap3	Cap 3 analog fixed setting V362, (0-100%)	Vtis	%	70.0	
242	V362_Cap4	Cap 4 analog fixed setting V362, (0-100%)	Vtis	%	65.0	
243	V362_Cap5	Cap 5 analog fixed setting V362, (0-100%)	Vtis	%	60.0	
244	V362_Cap6	Cap 6 analog fixed setting V362, (0-100%)	Vtis	%	55.0	
245	V362_RampSpeed	Ramping rate, greater value gives faster ramping. Value added / subtracted per second in ramp.	Vtis	% / sec	0.2	
246	V362_Spare1					

Rev.	Date/ Sign.	Description
0	0	
0		
0		
0		
0		

Tetra Therm Aseptic VTIS

Recipe

Doc.type:	PROGRAM RECIPE LIST			
Dept.	Design/Drawn	Template doc. rev.	Date	Revision
BU DBF	**TOJ/**	**1.00.13**	**2016-09-28**	**-**

Tetra Pak

LUND **SWEDEN**

PLCRP5844130774

This document and its content are our exclusive property and must not be copied, reproduced, transmitted or communicated to any other party or used for purposes not expressly permitted by us. Only to the extent expressly agreed by us this document may constitute a contractual obligation on our part.

Product recipe list.

Recipe #

Reg.	Name	Description	Used in	Unit:	Original	Changed
247	V362_Spare2					
248	VTIS_Spare18					
249	VTIS_Spare19					
250	VTIS_Spare20					
251	VTIS_Spare21					
252	VTIS_Spare22					
253	VTIS_Spare23					
254	VTIS_Spare24					
255	VTIS_Spare25					
256	VTIS_Spare26					
257	VTIS_Spare27					
258	VTIS_Spare28					
259	VTIS_Spare29					
260	iCIP.iCIP_Spare0					
261	iCIP.iCIP_MaxProdTime	Max production time before full CIP program	Common	h	24.0	
262	iCIP.iCIP_MaxTemp	Max temperature diff. Water / product before full CIP program	Flex	°C	10.0	
263	iCIP.iCIP_MaxPres_PT60	Max pressure PT60 before full CIP program.	Flex	bar	16.0	
264	iCIP.iCIP_MaxIncr_FC04	Max speed increase before full CIP program	Vtis	%	2.0	
265	iCIP.iCIP_Spare1					
266	iCIP.iCIP_Spare2					
267	iCIP.iCIP_Spare3					
268	iCIP.iCIP_Spare4					
269	iCIP.iCIP_Spare5					

Rev.	Date/ Sign.	Description
0	0	
0		
0		
0		
0		

Tetra Therm Aseptic VTIS

Recipe

Doc.type:	PROGRAM RECIPE LIST			
Dept.	Design/Drawn	Template doc. rev.	Date	Revision
BU DBF	**TOJ/**	**1.00.13**	**2016-09-28**	**-**

Tetra Pak

LUND **SWEDEN**

PLCRP5844130774

This document and its content are our exclusive property and must not be copied, reproduced, transmitted or communicated to any other party or used for purposes not expressly permitted by us. Only to the extent expressly agreed by us this document may constitute a contractual obligation on our part.

Product recipe list.

	Recipe #					
Reg.	**Name**	**Description**	**Used in**	**Unit:**	**Original**	**Changed**
277	TSL44_US_Preheater_SP	TSL44 US preheater Setpoint	Common	°C		
278	TSLx42_US_Sterilization	TSLx42 US sterilization	Common	°C		
279	TSLx42_US_Production	TSLx42 US production	Common	°C		

Rev.	Date/ Sign.	Description
0	0	
0		
0		
0		
0		

Tetra Therm Aseptic VTIS

Recipe

Doc.type:	PROGRAM RECIPE LIST			
Dept.	Design/Drawn	Template doc. rev.	Date	Revision
BU DBF	**TOJ/**	**1.00.13**	**2016-09-28**	**-**

Tetra Pak

LUND **SWEDEN**

PLCRP5844130774

This document and its content are our exclusive property and must not be copied, reproduced, transmitted or communicated to any other party or used for purposes not expressly permitted by us. Only to the extent expressly agreed by us this document may constitute a contractual obligation on our part.

PID recipe list.

Recipe 0 recipe manager (Not used), Recipe 1 Sterilisation (step 1- 13), Recipe 2 CIP, Recipe 3 Spare (not used),
Recipe 4 - 9 Production (step 17 - 62)

Recipe #

#	Name	Description	Used in mode	Unit:	Original	Changed
0	TC26.PID1.P	P -value (Gain) for controller, parameter set up 1, used for high capacity.	Common	#		
1	TC26.PID1.I	I - time (Integration) for controller, parameter set up 1, used for high capacity.	Common	sec		
2	TC26.PID1.D	D - time (Derivation) for controller, parameter set up 1, used for high capacity.	Common	sec		
3	TC26.PID2.P	P -value (Gain) for controller, parameter set up 2, used for low capacity.	Common	#		
4	TC26.PID2.I	I - time (Integration) for controller, parameter set up 2, used for low capacity.	Common	sec		
5	TC26.PID2.D	D - time (Derivation) for controller, parameter set up 2, used for low capacity.	Common	sec		
6	TC26.PID3.P	P -value (Gain) for controller, parameter set up 3, spare.	Common	#		
7	TC26.PID3.I	I - time (Integration) for controller, parameter set up 3, spare.	Common	sec		
8	TC26.PID3.D	D - time (Derivation) for controller, parameter set up 3, spare.	Common	sec		
9	TC26_spare	Spare	Common			
10	TC36.PID1.P	P -value (Gain) for controller, parameter set up 1, used for high capacity.	Common	#		
11	TC36.PID1.I	I - time (Integration) for controller, parameter set up 1, used for high capacity.	Common	sec		
12	TC36.PID1.D	D - time (Derivation) for controller, parameter set up 1, used for high capacity.	Common	sec		
13	TC36.PID2.P	P -value (Gain) for controller, parameter set up 2, used for low capacity.	Common	#		
14	TC36.PID2.I	I - time (Integration) for controller, parameter set up 2, used for low capacity.	Common	sec		
15	TC36.PID2.D	D - time (Derivation) for controller, parameter set up 2, used for low capacity.	Common	sec		
16	TC36.PID3.P	P -value (Gain) for controller, parameter set up 3, spare.	Common	#		
17	TC36.PID3.I	I - time (Integration) for controller, parameter set up 3, spare.	Common	sec		
18	TC36.PID3.D	D - time (Derivation) for controller, parameter set up 3, spare.	Common	sec		
19	TC36_spare	Spare	Common			
20	TC63.PID1.P	P -value (Gain) for controller, parameter set up 1, used for high capacity.	Common	#		
21	TC63.PID1.I	I - time (Integration) for controller, parameter set up 1, used for high capacity.	Common	sec		
22	TC63.PID1.D	D - time (Derivation) for controller, parameter set up 1, used for high capacity.	Common	sec		
23	TC63.PID2.P	P -value (Gain) for controller, parameter set up 2, used for low capacity.	Common	#		
24	TC63.PID2.I	I - time (Integration) for controller, parameter set up 2, used for low capacity.	Common	sec		
25	TC63.PID2.D	D - time (Derivation) for controller, parameter set up 2, used for low capacity.	Common	sec		
26	TC63.PID3.P	P -value (Gain) for controller, parameter set up 3, spare.	Common	#		
27	TC63.PID3.I	I - time (Integration) for controller, parameter set up 3, spare.	Common	sec		
28	TC63.PID3.D	D - time (Derivation) for controller, parameter set up 3, spare.	Common	sec		
29	TC63_spare	Spare	Common			
30	LC08.PID1.P	P -value (Gain) for controller, parameter set up 1, used for high capacity.	Common	#		
31	LC08.PID1.I	I - time (Integration) for controller, parameter set up 1, used for high capacity.	Common	sec		
32	LC08.PID1.D	D - time (Derivation) for controller, parameter set up 1, used for high capacity.	Common	sec		
33	LC08.PID2.P	P -value (Gain) for controller, parameter set up 2, used for low capacity.	Common	#		
34	LC08.PID2.I	I - time (Integration) for controller, parameter set up 2, used for low capacity.	Common	sec		
35	LC08.PID2.D	D - time (Derivation) for controller, parameter set up 2, used for low capacity.	Common	sec		
36	LC08.PID3.P	P -value (Gain) for controller, parameter set up 3, spare.	Common	#		
37	LC08.PID3.I	I - time (Integration) for controller, parameter set up 3, spare.	Common	sec		
38	LC08.PID3.D	D - time (Derivation) for controller, parameter set up 3, spare.	Common	sec		
39	LC08_spare	Spare	Common			

Rev.	Date/ Sign.	Description

Tetra Therm Aseptic VTIS
T5844130774
PID recipe

Doc.type: PROGRAM RECIPE LIST

Dept.	Design/Drawn	Template doc. rev.	Date	Revision
BU DBF	**TOJ/**	**1.00.13**	**2016-09-28**	**-**

Tetra Pak
LUND SWEDEN
PLCRP5844130774

This document and its content are our exclusive property and must not be copied, reproduced, transmitted or communicated to any other party or used for purposes not expressly permitted by us. Only to the extent expressly agreed by us this document may constitute a contractual obligation on our part.

PID recipe list.

Recipe #

Reg.	Name	Description	Used in	Unit:	Original	Changed
40	LC10.PID1.P	P -value (Gain) for controller, parameter set up 1, used for high capacity.	Common	#		
41	LC10.PID1.I	I - time (Integration) for controller, parameter set up 1, used for high capacity.	Common	sec		
42	LC10.PID1.D	D - time (Derivation) for controller, parameter set up 1, used for high capacity.	Common	sec		
43	LC10.PID2.P	P -value (Gain) for controller, parameter set up 2, used for low capacity.	Common	#		
44	LC10.PID2.I	I - time (Integration) for controller, parameter set up 2, used for low capacity.	Common	sec		
45	LC10.PID2.D	D - time (Derivation) for controller, parameter set up 2, used for low capacity.	Common	sec		
46	LC10.PID3.P	P -value (Gain) for controller, parameter set up 3, spare.	Common	#		
47	LC10.PID3.I	I - time (Integration) for controller, parameter set up 3, spare.	Common	sec		
48	LC10.PID3.D	D - time (Derivation) for controller, parameter set up 3, spare.	Common	sec		
49	LC10_spare	Spare	Common			
50	PIDSpare.PID1.P	P -value (Gain) for controller, parameter set up 1, used for high capacity.	Common	#		
51	PIDSpare.PID1.I	I - time (Integration) for controller, parameter set up 1, used for high capacity.	Common	sec		
52	PIDSpare.PID1.D	D - time (Derivation) for controller, parameter set up 1, used for high capacity.	Common	sec		
53	PIDSpare.PID2.P	P -value (Gain) for controller, parameter set up 2, used for low capacity.	Common	#		
54	PIDSpare.PID2.I	I - time (Integration) for controller, parameter set up 2, used for low capacity.	Common	sec		
55	PIDSpare.PID2.D	D - time (Derivation) for controller, parameter set up 2, used for low capacity.	Common	sec		
56	PIDSpare.PID3.P	P -value (Gain) for controller, parameter set up 3, spare.	Common	#		
57	PIDSpare.PID3.I	I - time (Integration) for controller, parameter set up 3, spare.	Common	sec		
58	PIDSpare.PID3.D	D - time (Derivation) for controller, parameter set up 3, spare.	Common	sec		
59	PIDSpare_spare	Spare	Common			
60	PIDSpare01.PID1.P	P -value (Gain) for controller, parameter set up 1, used for high capacity.	Common	#		
61	PIDSpare01.PID1.I	I - time (Integration) for controller, parameter set up 1, used for high capacity.	Common	sec		
62	PIDSpare01.PID1.D	D - time (Derivation) for controller, parameter set up 1, used for high capacity.	Common	sec		
63	PIDSpare01.PID2.P	P -value (Gain) for controller, parameter set up 2, used for low capacity.	Common	#		
64	PIDSpare01.PID2.I	I - time (Integration) for controller, parameter set up 2, used for low capacity.	Common	sec		
65	PIDSpare01.PID2.D	D - time (Derivation) for controller, parameter set up 2, used for low capacity.	Common	sec		
66	PIDSpare01.PID3.P	P -value (Gain) for controller, parameter set up 3, spare.	Common	#		
67	PIDSpare01.PID3.I	I - time (Integration) for controller, parameter set up 3, spare.	Common	sec		
68	PIDSpare01.PID3.D	D - time (Derivation) for controller, parameter set up 3, spare.	Common	sec		
69	PIDSpare01_spare	Spare	Common			
70	FC04.PID1.P	P -value (Gain) for controller, parameter set up 1, used for high capacity.	Common	#		
71	FC04.PID1.I	I - time (Integration) for controller, parameter set up 1, used for high capacity.	Common	sec		
72	FC04.PID1.D	D - time (Derivation) for controller, parameter set up 1, used for high capacity.	Common	sec		
73	FC04.PID2.P	P -value (Gain) for controller, parameter set up 2, used for low capacity.	Common	#		
74	FC04.PID2.I	I - time (Integration) for controller, parameter set up 2, used for low capacity.	Common	sec		
75	FC04.PID2.D	D - time (Derivation) for controller, parameter set up 2, used for low capacity.	Common	sec		
76	FC04.PID3.P	P -value (Gain) for controller, parameter set up 3, spare.	Common	#		
77	FC04.PID3.I	I - time (Integration) for controller, parameter set up 3, spare.	Common	sec		
78	FC04.PID3.D	D - time (Derivation) for controller, parameter set up 3, spare.	Common	sec		
79	FC04_spare	Spare	Common			

Rev.	Date/ Sign.	Description
0	0	
0		
0		
0		
0		

Tetra Therm Aseptic VTIS

PID recipe

Doc.type:	PROGRAM RECIPE LIST			
Dept.	Design/Drawn	Template doc. rev.	Date	Revision
BU DBF	**TOJ/**	**1.00.13**	**2016-09-28**	**-**

Tetra Pak

LUND **SWEDEN**

PLCRP5844130774

This document and its content are our exclusive property and must not be copied, reproduced, transmitted or communicated to any other party or used for purposes not expressly permitted by us. Only to the extent expressly agreed by us this document may constitute a contractual obligation on our part.

PID recipe list.

Recipe #

Reg.	Name	Description	Used in	Unit:	Original	Changed
80	FC06.PID1.P	P -value (Gain) for controller, parameter set up 1, used for high capacity.	Flex	#		
81	FC06.PID1.I	I - time (Integration) for controller, parameter set up 1, used for high capacity.	Flex	sec		
82	FC06.PID1.D	D - time (Derivation) for controller, parameter set up 1, used for high capacity.	Flex	sec		
83	FC06.PID2.P	P -value (Gain) for controller, parameter set up 2, used for low capacity.	Flex	#		
84	FC06.PID2.I	I - time (Integration) for controller, parameter set up 2, used for low capacity.	Flex	sec		
85	FC06.PID2.D	D - time (Derivation) for controller, parameter set up 2, used for low capacity.	Flex	sec		
86	FC06.PID3.P	P -value (Gain) for controller, parameter set up 3, spare.	Flex	#		
87	FC06.PID3.I	I - time (Integration) for controller, parameter set up 3, spare.	Flex	sec		
88	FC06.PID3.D	D - time (Derivation) for controller, parameter set up 3, spare.	Flex	sec		
89	FC06_spare	Spare	Flex			
90	FC10S.PID1.P	P -value (Gain) for controller, parameter set up 1, used for high capacity.	Flex	#		
91	FC10S.PID1.I	I - time (Integration) for controller, parameter set up 1, used for high capacity.	Flex	sec		
92	FC10S.PID1.D	D - time (Derivation) for controller, parameter set up 1, used for high capacity.	Flex	sec		
93	FC10S.PID2.P	P -value (Gain) for controller, parameter set up 2, used for low capacity.	Flex	#		
94	FC10S.PID2.I	I - time (Integration) for controller, parameter set up 2, used for low capacity.	Flex	sec		
95	FC10S.PID2.D	D - time (Derivation) for controller, parameter set up 2, used for low capacity.	Flex	sec		
96	FC10S.PID3.P	P -value (Gain) for controller, parameter set up 3, spare.	Flex	#		
97	FC10S.PID3.I	I - time (Integration) for controller, parameter set up 3, spare.	Flex	sec		
98	FC10S.PID3.D	D - time (Derivation) for controller, parameter set up 3, spare.	Flex	sec		
99	FC10S_spare	Spare	Flex			
100	LC32.PID1.P	P -value (Gain) for controller, parameter set up 1, used for high capacity.	Flex	#		
101	LC32.PID1.I	I - time (Integration) for controller, parameter set up 1, used for high capacity.	Flex	sec		
102	LC32.PID1.D	D - time (Derivation) for controller, parameter set up 1, used for high capacity.	Flex	sec		
103	LC32.PID2.P	P -value (Gain) for controller, parameter set up 2, used for low capacity.	Flex	#		
104	LC32.PID2.I	I - time (Integration) for controller, parameter set up 2, used for low capacity.	Flex	sec		
105	LC32.PID2.D	D - time (Derivation) for controller, parameter set up 2, used for low capacity.	Flex	sec		
106	LC32.PID3.P	P -value (Gain) for controller, parameter set up 3, spare.	Flex	#		
107	LC32.PID3.I	I - time (Integration) for controller, parameter set up 3, spare.	Flex	sec		
108	LC32.PID3.D	D - time (Derivation) for controller, parameter set up 3, spare.	Flex	sec		
109	LC32_spare	Spare	Flex			
110	PC04.PID1.P	P -value (Gain) for controller, parameter set up 1, used for high capacity.	Flex	#		
111	PC04.PID1.I	I - time (Integration) for controller, parameter set up 1, used for high capacity.	Flex	sec		
112	PC04.PID1.D	D - time (Derivation) for controller, parameter set up 1, used for high capacity.	Flex	sec		
113	PC04.PID2.P	P -value (Gain) for controller, parameter set up 2, used for low capacity.	Flex	#		
114	PC04.PID2.I	I - time (Integration) for controller, parameter set up 2, used for low capacity.	Flex	sec		
115	PC04.PID2.D	D - time (Derivation) for controller, parameter set up 2, used for low capacity.	Flex	sec		
116	PC04.PID3.P	P -value (Gain) for controller, parameter set up 3, spare.	Flex	#		
117	PC04.PID3.I	I - time (Integration) for controller, parameter set up 3, spare.	Flex	sec		
118	PC04.PID3.D	D - time (Derivation) for controller, parameter set up 3, spare.	Flex	sec		
119	PC04_spare	Spare	Flex			

Rev.	Date/ Sign.	Description
0	0	
0		
0		
0		
0		

Tetra Therm Aseptic VTIS

PID recipe

Doc.type:	PROGRAM RECIPE LIST				
Dept.	Design/Drawn	Template doc. rev.	Date	Revision	
BU DBF	**TOJ/**	**1.00.13**	**2016-09-28**	**-**	**PLCRP5844130774**

Tetra Pak

LUND **SWEDEN**

This document and its content are our exclusive property and must not be copied, reproduced, transmitted or communicated to any other party or used for purposes not expressly permitted by us. Only to the extent expressly agreed by us this document may constitute a contractual obligation on our part.

PID recipe list.

Recipe #

Reg.	Name	Description	Used in	Unit:	Original	Changed
120	TC43.PID1.P	P -value (Gain) for controller, parameter set up 1, used for high capacity.	Flex	#		
121	TC43.PID1.I	I - time (Integration) for controller, parameter set up 1, used for high capacity.	Flex	sec		
122	TC43.PID1.D	D - time (Derivation) for controller, parameter set up 1, used for high capacity.	Flex	sec		
123	TC43.PID2.P	P -value (Gain) for controller, parameter set up 2, used for low capacity.	Flex	#		
124	TC43.PID2.I	I - time (Integration) for controller, parameter set up 2, used for low capacity.	Flex	sec		
125	TC43.PID2.D	D - time (Derivation) for controller, parameter set up 2, used for low capacity.	Flex	sec		
126	TC43.PID3.P	P -value (Gain) for controller, parameter set up 3, spare.	Flex	#		
127	TC43.PID3.I	I - time (Integration) for controller, parameter set up 3, spare.	Flex	sec		
128	TC43.PID3.D	D - time (Derivation) for controller, parameter set up 3, spare.	Flex	sec		
129	TC43_spare	Spare	Flex			
130	TC44F.PID1.P	P -value (Gain) for controller, parameter set up 1, used for high capacity.	Flex	#		
131	TC44F.PID1.I	I - time (Integration) for controller, parameter set up 1, used for high capacity.	Flex	sec		
132	TC44F.PID1.D	D - time (Derivation) for controller, parameter set up 1, used for high capacity.	Flex	sec		
133	TC44F.PID2.P	P -value (Gain) for controller, parameter set up 2, used for low capacity.	Flex	#		
134	TC44F.PID2.I	I - time (Integration) for controller, parameter set up 2, used for low capacity.	Flex	sec		
135	TC44F.PID2.D	D - time (Derivation) for controller, parameter set up 2, used for low capacity.	Flex	sec		
136	TC44F.PID3.P	P -value (Gain) for controller, parameter set up 3, spare.	Flex	#		
137	TC44F.PID3.I	I - time (Integration) for controller, parameter set up 3, spare.	Flex	sec		
138	TC44F.PID3.D	D - time (Derivation) for controller, parameter set up 3, spare.	Flex	sec		
139	TC44F_spare	Spare	Flex			
140	TC49.PID1.P	P -value (Gain) for controller, parameter set up 1, used for high capacity.	Flex	#		
141	TC49.PID1.I	I - time (Integration) for controller, parameter set up 1, used for high capacity.	Flex	sec		
142	TC49.PID1.D	D - time (Derivation) for controller, parameter set up 1, used for high capacity.	Flex	sec		
143	TC49.PID2.P	P -value (Gain) for controller, parameter set up 2, used for low capacity.	Flex	#		
144	TC49.PID2.I	I - time (Integration) for controller, parameter set up 2, used for low capacity.	Flex	sec		
145	TC49.PID2.D	D - time (Derivation) for controller, parameter set up 2, used for low capacity.	Flex	sec		
146	TC49.PID3.P	P -value (Gain) for controller, parameter set up 3, spare.	Flex	#		
147	TC49.PID3.I	I - time (Integration) for controller, parameter set up 3, spare.	Flex	sec		
148	TC49.PID3.D	D - time (Derivation) for controller, parameter set up 3, spare.	Flex	sec		
149	TC49_spare	Spare	Flex			
150	TC56.PID1.P	P -value (Gain) for controller, parameter set up 1, used for high capacity.	Flex	#		
151	TC56.PID1.I	I - time (Integration) for controller, parameter set up 1, used for high capacity.	Flex	sec		
152	TC56.PID1.D	D - time (Derivation) for controller, parameter set up 1, used for high capacity.	Flex	sec		
153	TC56.PID2.P	P -value (Gain) for controller, parameter set up 2, used for low capacity.	Flex	#		
154	TC56.PID2.I	I - time (Integration) for controller, parameter set up 2, used for low capacity.	Flex	sec		
155	TC56.PID2.D	D - time (Derivation) for controller, parameter set up 2, used for low capacity.	Flex	sec		
156	TC56.PID3.P	P -value (Gain) for controller, parameter set up 3, spare.	Flex	#		
157	TC56.PID3.I	I - time (Integration) for controller, parameter set up 3, spare.	Flex	sec		
158	TC56.PID3.D	D - time (Derivation) for controller, parameter set up 3, spare.	Flex	sec		
159	TC56_spare	Spare	Flex			

Rev.	Date/ Sign.	Description
0	0	
0		
0		
0		
0		

Tetra Therm Aseptic VTIS

PID recipe

Doc.type:	PROGRAM RECIPE LIST				
Dept.	Design/Drawn	Template doc. rev.	Date	Revision	
BU DBF	**TOJ/**	**1.00.13**	**2016-09-28**	**-**	**PLCRP5844130774**

Tetra Pak

LUND **SWEDEN**

This document and its content are our exclusive property and must not be copied, reproduced, transmitted or communicated to any other party or used for purposes not expressly permitted by us. Only to the extent expressly agreed by us this document may constitute a contractual obligation on our part.

PID recipe list.

Recipe #

Reg.	Name	Description	Used in	Unit:	Original	Changed
160	TC60.PID1.P	P -value (Gain) for controller, parameter set up 1, used for high capacity.	Common	#		
161	TC60.PID1.I	I - time (Integration) for controller, parameter set up 1, used for high capacity.	Common	sec		
162	TC60.PID1.D	D - time (Derivation) for controller, parameter set up 1, used for high capacity.	Common	sec		
163	TC60.PID2.P	P -value (Gain) for controller, parameter set up 2, used for low capacity.	Common	#		
164	TC60.PID2.I	I - time (Integration) for controller, parameter set up 2, used for low capacity.	Common	sec		
165	TC60.PID2.D	D - time (Derivation) for controller, parameter set up 2, used for low capacity.	Common	sec		
166	TC60.PID3.P	P -value (Gain) for controller, parameter set up 3, spare.	Common	#		
167	TC60.PID3.I	I - time (Integration) for controller, parameter set up 3, spare.	Common	sec		
168	TC60.PID3.D	D - time (Derivation) for controller, parameter set up 3, spare.	Common	sec		
169	TC60_spare	Spare	Flex			
170	TC64.PID1.P	P -value (Gain) for controller, parameter set up 1, used for high capacity.	Flex	#		
171	TC64.PID1.I	I - time (Integration) for controller, parameter set up 1, used for high capacity.	Flex	sec		
172	TC64.PID1.D	D - time (Derivation) for controller, parameter set up 1, used for high capacity.	Flex	sec		
173	TC64.PID2.P	P -value (Gain) for controller, parameter set up 2, used for low capacity.	Flex	#		
174	TC64.PID2.I	I - time (Integration) for controller, parameter set up 2, used for low capacity.	Flex	sec		
175	TC64.PID2.D	D - time (Derivation) for controller, parameter set up 2, used for low capacity.	Flex	sec		
176	TC64.PID3.P	P -value (Gain) for controller, parameter set up 3, spare.	Flex	#		
177	TC64.PID3.I	I - time (Integration) for controller, parameter set up 3, spare.	Flex	sec		
178	TC64.PID3.D	D - time (Derivation) for controller, parameter set up 3, spare.	Flex	sec		
179	TC64_spare	Spare	Flex			
180	TC67.PID1.P	P -value (Gain) for controller, parameter set up 1, used for high capacity.	Flex	#		
181	TC67.PID1.I	I - time (Integration) for controller, parameter set up 1, used for high capacity.	Flex	sec		
182	TC67.PID1.D	D - time (Derivation) for controller, parameter set up 1, used for high capacity.	Flex	sec		
183	TC67.PID2.P	P -value (Gain) for controller, parameter set up 2, used for low capacity.	Flex	#		
184	TC67.PID2.I	I - time (Integration) for controller, parameter set up 2, used for low capacity.	Flex	sec		
185	TC67.PID2.D	D - time (Derivation) for controller, parameter set up 2, used for low capacity.	Flex	sec		
186	TC67.PID3.P	P -value (Gain) for controller, parameter set up 3, spare.	Flex	#		
187	TC67.PID3.I	I - time (Integration) for controller, parameter set up 3, spare.	Flex	sec		
188	TC67.PID3.D	D - time (Derivation) for controller, parameter set up 3, spare.	Flex	sec		
189	TC67_spare	Spare	Flex			
190	TC95.PID1.P	P -value (Gain) for controller, parameter set up 1, used for high capacity.	Flex	#		
191	TC95.PID1.I	I - time (Integration) for controller, parameter set up 1, used for high capacity.	Flex	sec		
192	TC95.PID1.D	D - time (Derivation) for controller, parameter set up 1, used for high capacity.	Flex	sec		
193	TC95.PID2.P	P -value (Gain) for controller, parameter set up 2, used for low capacity.	Flex	#		
194	TC95.PID2.I	I - time (Integration) for controller, parameter set up 2, used for low capacity.	Flex	sec		
195	TC95.PID2.D	D - time (Derivation) for controller, parameter set up 2, used for low capacity.	Flex	sec		
196	TC95.PID3.P	P -value (Gain) for controller, parameter set up 3, spare.	Flex	#		
197	TC95.PID3.I	I - time (Integration) for controller, parameter set up 3, spare.	Flex	sec		
198	TC95.PID3.D	D - time (Derivation) for controller, parameter set up 3, spare.	Flex	sec		
199	TC95_spare	Spare	Flex			

Rev.	Date/ Sign.	Description
0	0	
0		
0		
0		
0		

Tetra Therm Aseptic VTIS

PID recipe

Doc.type:	PROGRAM RECIPE LIST				
Dept.	Design/Drawn	Template doc. rev.	Date	Revision	
BU DBF	**TOJ/**	**1.00.13**	**2016-09-28**	**-**	**PLCRP5844130774**

Tetra Pak

LUND **SWEDEN**

This document and its content are our exclusive property and must not be copied, reproduced, transmitted or communicated to any other party or used for purposes not expressly permitted by us. Only to the extent expressly agreed by us this document may constitute a contractual obligation on our part.

PID recipe list.

Recipe #

Reg.	Name	Description	Used in	Unit:	Original	Changed
200	TC99.PID1.P	P -value (Gain) for controller, parameter set up 1, used for high capacity.	Flex	#		
201	TC99.PID1.I	I - time (Integration) for controller, parameter set up 1, used for high capacity.	Flex	sec		
202	TC99.PID1.D	D - time (Derivation) for controller, parameter set up 1, used for high capacity.	Flex	sec		
203	TC99.PID2.P	P -value (Gain) for controller, parameter set up 2, used for low capacity.	Flex	#		
204	TC99.PID2.I	I - time (Integration) for controller, parameter set up 2, used for low capacity.	Flex	sec		
205	TC99.PID2.D	D - time (Derivation) for controller, parameter set up 2, used for low capacity.	Flex	sec		
206	TC99.PID3.P	P -value (Gain) for controller, parameter set up 3, spare.	Flex	#		
207	TC99.PID3.I	I - time (Integration) for controller, parameter set up 3, spare.	Flex	sec		
208	TC99.PID3.D	D - time (Derivation) for controller, parameter set up 3, spare.	Flex	sec		
209	TC99_spare	Spare	Flex			
210	TC99S.PID1.P	P -value (Gain) for controller, parameter set up 1, used for high capacity.	Flex	#		
211	TC99S.PID1.I	I - time (Integration) for controller, parameter set up 1, used for high capacity.	Flex	sec		
212	TC99S.PID1.D	D - time (Derivation) for controller, parameter set up 1, used for high capacity.	Flex	sec		
213	TC99S.PID2.P	P -value (Gain) for controller, parameter set up 2, used for low capacity.	Flex	#		
214	TC99S.PID2.I	I - time (Integration) for controller, parameter set up 2, used for low capacity.	Flex	sec		
215	TC99S.PID2.D	D - time (Derivation) for controller, parameter set up 2, used for low capacity.	Flex	sec		
216	TC99S.PID3.P	P -value (Gain) for controller, parameter set up 3, spare.	Flex	#		
217	TC99S.PID3.I	I - time (Integration) for controller, parameter set up 3, spare.	Flex	sec		
218	TC99S.PID3.D	D - time (Derivation) for controller, parameter set up 3, spare.	Flex	sec		
219	TC99S_spare	Spare	Flex			
220	TC39.PID1.P	P -value (Gain) for controller, parameter set up 1, used for high capacity.	Vtis	#		
221	TC39.PID1.I	I - time (Integration) for controller, parameter set up 1, used for high capacity.	Vtis	sec		
222	TC39.PID1.D	D - time (Derivation) for controller, parameter set up 1, used for high capacity.	Vtis	sec		
223	TC39.PID2.P	P -value (Gain) for controller, parameter set up 2, used for low capacity.	Vtis	#		
224	TC39.PID2.I	I - time (Integration) for controller, parameter set up 2, used for low capacity.	Vtis	sec		
225	TC39.PID2.D	D - time (Derivation) for controller, parameter set up 2, used for low capacity.	Vtis	sec		
226	TC39.PID3.P	P -value (Gain) for controller, parameter set up 3, spare.	Vtis	#		
227	TC39.PID3.I	I - time (Integration) for controller, parameter set up 3, spare.	Vtis	sec		
228	TC39.PID3.D	D - time (Derivation) for controller, parameter set up 3, spare.	Vtis	sec		
229	TC39_spare	Spare	Vtis			
230	LC305.PID1.P	P -value (Gain) for controller, parameter set up 1, used for high capacity.	Vtis	#		
231	LC305.PID1.I	I - time (Integration) for controller, parameter set up 1, used for high capacity.	Vtis	sec		
232	LC305.PID1.D	D - time (Derivation) for controller, parameter set up 1, used for high capacity.	Vtis	sec		
233	LC305.PID2.P	P -value (Gain) for controller, parameter set up 2, used for low capacity.	Vtis	#		
234	LC305.PID2.I	I - time (Integration) for controller, parameter set up 2, used for low capacity.	Vtis	sec		
235	LC305.PID2.D	D - time (Derivation) for controller, parameter set up 2, used for low capacity.	Vtis	sec		
236	LC305.PID3.P	P -value (Gain) for controller, parameter set up 3, spare.	Vtis	#		
237	LC305.PID3.I	I - time (Integration) for controller, parameter set up 3, spare.	Vtis	sec		
238	LC305.PID3.D	D - time (Derivation) for controller, parameter set up 3, spare.	Vtis	sec		
239	LC305_spare	Spare	Vtis			

Rev.	Date/ Sign.	Description
0	0	
0		
0		
0		
0		

Tetra Therm Aseptic VTIS

PID recipe

Doc.type:	PROGRAM RECIPE LIST				
Dept.	Design/Drawn	Template doc. rev.	Date	Revision	
BU DBF	**TOJ/**	**1.00.13**	**2016-09-28**	**-**	**PLCRP5844130774**

Tetra Pak

LUND **SWEDEN**

This document and its content are our exclusive property and must not be copied, reproduced, transmitted or communicated to any other party or used for purposes not expressly permitted by us. Only to the extent expressly agreed by us this document may constitute a contractual obligation on our part.

PID recipe list.

Recipe #

Reg.	Name	Description	Used in	Unit:	Original	Changed
240	LC306.PID1.P	P -value (Gain) for controller, parameter set up 1, used for high capacity.	Vtis	#		
241	LC306.PID1.I	I - time (Integration) for controller, parameter set up 1, used for high capacity.	Vtis	sec		
242	LC306.PID1.D	D - time (Derivation) for controller, parameter set up 1, used for high capacity.	Vtis	sec		
243	LC306.PID2.P	P -value (Gain) for controller, parameter set up 2, used for low capacity.	Vtis	#		
244	LC306.PID2.I	I - time (Integration) for controller, parameter set up 2, used for low capacity.	Vtis	sec		
245	LC306.PID2.D	D - time (Derivation) for controller, parameter set up 2, used for low capacity.	Vtis	sec		
246	LC306.PID3.P	P -value (Gain) for controller, parameter set up 3, spare.	Vtis	#		
247	LC306.PID3.I	I - time (Integration) for controller, parameter set up 3, spare.	Vtis	sec		
248	LC306.PID3.D	D - time (Derivation) for controller, parameter set up 3, spare.	Vtis	sec		
249	LC306_spare	Spare	Vtis			
250	LC504.PID1.P	P -value (Gain) for controller, parameter set up 1, used for high capacity.	Infuser	#		
251	LC504.PID1.I	I - time (Integration) for controller, parameter set up 1, used for high capacity.	Infuser	sec		
252	LC504.PID1.D	D - time (Derivation) for controller, parameter set up 1, used for high capacity.	Infuser	sec		
253	LC504.PID2.P	P -value (Gain) for controller, parameter set up 2, used for low capacity.	Infuser	#		
254	LC504.PID2.I	I - time (Integration) for controller, parameter set up 2, used for low capacity.	Infuser	sec		
255	LC504.PID2.D	D - time (Derivation) for controller, parameter set up 2, used for low capacity.	Infuser	sec		
256	LC504.PID3.P	P -value (Gain) for controller, parameter set up 3, spare.	Infuser	#		
257	LC504.PID3.I	I - time (Integration) for controller, parameter set up 3, spare.	Infuser	sec		
258	LC504.PID3.D	D - time (Derivation) for controller, parameter set up 3, spare.	Infuser	sec		
259	LC504_spare	Spare	Infuser			
260	TC331.PID1.P	P -value (Gain) for controller, parameter set up 1, used for high capacity.	Vtis	#		
261	TC331.PID1.I	I - time (Integration) for controller, parameter set up 1, used for high capacity.	Vtis	sec		
262	TC331.PID1.D	D - time (Derivation) for controller, parameter set up 1, used for high capacity.	Vtis	sec		
263	TC331.PID2.P	P -value (Gain) for controller, parameter set up 2, used for low capacity.	Vtis	#		
264	TC331.PID2.I	I - time (Integration) for controller, parameter set up 2, used for low capacity.	Vtis	sec		
265	TC331.PID2.D	D - time (Derivation) for controller, parameter set up 2, used for low capacity.	Vtis	sec		
266	TC331.PID3.P	P -value (Gain) for controller, parameter set up 3, spare.	Vtis	#		
267	TC331.PID3.I	I - time (Integration) for controller, parameter set up 3, spare.	Vtis	sec		
268	TC331.PID3.D	D - time (Derivation) for controller, parameter set up 3, spare.	Vtis	sec		
269	TC331_spare	Spare	Vtis			
270	TC381.PID1.P	P -value (Gain) for controller, parameter set up 1, used for high capacity.	Vtis	#		
271	TC381.PID1.I	I - time (Integration) for controller, parameter set up 1, used for high capacity.	Vtis	sec		
272	TC381.PID1.D	D - time (Derivation) for controller, parameter set up 1, used for high capacity.	Vtis	sec		
273	TC381.PID2.P	P -value (Gain) for controller, parameter set up 2, used for low capacity.	Vtis	#		
274	TC381.PID2.I	I - time (Integration) for controller, parameter set up 2, used for low capacity.	Vtis	sec		
275	TC381.PID2.D	D - time (Derivation) for controller, parameter set up 2, used for low capacity.	Vtis	sec		
276	TC381.PID3.P	P -value (Gain) for controller, parameter set up 3, spare.	Vtis	#		
277	TC381.PID3.I	I - time (Integration) for controller, parameter set up 3, spare.	Vtis	sec		
278	TC381.PID3.D	D - time (Derivation) for controller, parameter set up 3, spare.	Vtis	sec		
279	TC381_spare	Spare	Vtis			

Rev.	Date/ Sign.	Description
0	0	
0		
0		
0		
0		

Tetra Therm Aseptic VTIS

PID recipe

Doc.type:	PROGRAM RECIPE LIST			
Dept.	Design/Drawn	Template doc. rev.	Date	Revision
BU DBF	**TOJ/**	**1.00.13**	**2016-09-28**	**-**

Tetra Pak

LUND **SWEDEN**

PLCRP5844130774

This document and its content are our exclusive property and must not be copied, reproduced, transmitted or communicated to any other party or used for purposes not expressly permitted by us. Only to the extent expressly agreed by us this document may constitute a contractual obligation on our part.

PID recipe list.

Recipe #

Reg.	Name	Description	Used in	Unit:	Original	Changed
280	TC44V.PID1.P	P -value (Gain) for controller, parameter set up 1, used for high capacity.	Vtis	#		
281	TC44V.PID1.I	I - time (Integration) for controller, parameter set up 1, used for high capacity.	Vtis	sec		
282	TC44V.PID1.D	D - time (Derivation) for controller, parameter set up 1, used for high capacity.	Vtis	sec		
283	TC44V.PID2.P	P -value (Gain) for controller, parameter set up 2, used for low capacity.	Vtis	#		
284	TC44V.PID2.I	I - time (Integration) for controller, parameter set up 2, used for low capacity.	Vtis	sec		
285	TC44V.PID2.D	D - time (Derivation) for controller, parameter set up 2, used for low capacity.	Vtis	sec		
286	TC44V.PID3.P	P -value (Gain) for controller, parameter set up 3, spare.	Vtis	#		
287	TC44V.PID3.I	I - time (Integration) for controller, parameter set up 3, spare.	Vtis	sec		
288	TC44V.PID3.D	D - time (Derivation) for controller, parameter set up 3, spare.	Vtis	sec		
289	TC44V_spare	Spare	Vtis			
290	TC344.PID1.P	P -value (Gain) for controller, parameter set up 1, used for high capacity.	Vtis	#		
291	TC344.PID1.I	I - time (Integration) for controller, parameter set up 1, used for high capacity.	Vtis	sec		
292	TC344.PID1.D	D - time (Derivation) for controller, parameter set up 1, used for high capacity.	Vtis	sec		
293	TC344.PID2.P	P -value (Gain) for controller, parameter set up 2, used for low capacity.	Vtis	#		
294	TC344.PID2.I	I - time (Integration) for controller, parameter set up 2, used for low capacity.	Vtis	sec		
295	TC344.PID2.D	D - time (Derivation) for controller, parameter set up 2, used for low capacity.	Vtis	sec		
296	TC344.PID3.P	P -value (Gain) for controller, parameter set up 3, spare.	Vtis	#		
297	TC344.PID3.I	I - time (Integration) for controller, parameter set up 3, spare.	Vtis	sec		
298	TC344.PID3.D	D - time (Derivation) for controller, parameter set up 3, spare.	Vtis	sec		
299	TC344_spare	Spare	Vtis			
300	TC544.PID1.P	P -value (Gain) for controller, parameter set up 1, used for high capacity.	Vtis	#		
301	TC544.PID1.I	I - time (Integration) for controller, parameter set up 1, used for high capacity.	Vtis	sec		
302	TC544.PID1.D	D - time (Derivation) for controller, parameter set up 1, used for high capacity.	Vtis	sec		
303	TC544.PID2.P	P -value (Gain) for controller, parameter set up 2, used for low capacity.	Vtis	#		
304	TC544.PID2.I	I - time (Integration) for controller, parameter set up 2, used for low capacity.	Vtis	sec		
305	TC544.PID2.D	D - time (Derivation) for controller, parameter set up 2, used for low capacity.	Vtis	sec		
306	TC544.PID3.P	P -value (Gain) for controller, parameter set up 3, spare.	Vtis	#		
307	TC544.PID3.I	I - time (Integration) for controller, parameter set up 3, spare.	Vtis	sec		
308	TC544.PID3.D	D - time (Derivation) for controller, parameter set up 3, spare.	Vtis	sec		
309	TC544_spare	Spare	Vtis			
310	TC41.PID1.P	P -value (Gain) for controller, parameter set up 1, used for high capacity.	Vtis	#		
311	TC41.PID1.I	I - time (Integration) for controller, parameter set up 1, used for high capacity.	Vtis	sec		
312	TC41.PID1.D	D - time (Derivation) for controller, parameter set up 1, used for high capacity.	Vtis	sec		
313	TC41.PID2.P	P -value (Gain) for controller, parameter set up 2, used for low capacity.	Vtis	#		
314	TC41.PID2.I	I - time (Integration) for controller, parameter set up 2, used for low capacity.	Vtis	sec		
315	TC41.PID2.D	D - time (Derivation) for controller, parameter set up 2, used for low capacity.	Vtis	sec		
316	TC41.PID3.P	P -value (Gain) for controller, parameter set up 3, spare.	Vtis	#		
317	TC41.PID3.I	I - time (Integration) for controller, parameter set up 3, spare.	Vtis	sec		
318	TC41.PID3.D	D - time (Derivation) for controller, parameter set up 3, spare.	Vtis	sec		
319	TC41_spare	Spare	Vtis			

Rev.	Date/ Sign.	Description
0	0	
0		
0		
0		
0		

Tetra Therm Aseptic VTIS

PID recipe

Doc.type:	PROGRAM RECIPE LIST				
Dept.	Design/Drawn	Template doc. rev.	Date	Revision	
BU DBF	**TOJ/**	**1.00.13**	**2016-09-28**	**-**	**PLCRP5844130774**

Tetra Pak

LUND **SWEDEN**

This document and its content are our exclusive property and must not be copied, reproduced, transmitted or communicated to any other party or used for purposes not expressly permitted by us. Only to the extent expressly agreed by us this document may constitute a contractual obligation on our part.

PID recipe list.

Recipe #

Reg.	Name	Description	Used in	Unit:	Original	Changed
320	TC529.PID1.P	P -value (Gain) for controller, parameter set up 1, used for high capacity.	Infuser	#		
321	TC529.PID1.I	I - time (Integration) for controller, parameter set up 1, used for high capacity.	Infuser	sec		
322	TC529.PID1.D	D - time (Derivation) for controller, parameter set up 1, used for high capacity.	Infuser	sec		
323	TC529.PID2.P	P -value (Gain) for controller, parameter set up 2, used for low capacity.	Infuser	#		
324	TC529.PID2.I	I - time (Integration) for controller, parameter set up 2, used for low capacity.	Infuser	sec		
325	TC529.PID2.D	D - time (Derivation) for controller, parameter set up 2, used for low capacity.	Infuser	sec		
326	TC529.PID3.P	P -value (Gain) for controller, parameter set up 3, spare.	Infuser	#		
327	TC529.PID3.I	I - time (Integration) for controller, parameter set up 3, spare.	Infuser	sec		
328	TC529.PID3.D	D - time (Derivation) for controller, parameter set up 3, spare.	Infuser	sec		
329	TC529_spare	Spare	Infuser			
330	PC330.PID1.P	P -value (Gain) for controller, parameter set up 1, used for high capacity.	Vtis	#		
331	PC330.PID1.I	I - time (Integration) for controller, parameter set up 1, used for high capacity.	Vtis	sec		
332	PC330.PID1.D	D - time (Derivation) for controller, parameter set up 1, used for high capacity.	Vtis	sec		
333	PC330.PID2.P	P -value (Gain) for controller, parameter set up 2, used for low capacity.	Vtis	#		
334	PC330.PID2.I	I - time (Integration) for controller, parameter set up 2, used for low capacity.	Vtis	sec		
335	PC330.PID2.D	D - time (Derivation) for controller, parameter set up 2, used for low capacity.	Vtis	sec		
336	PC330.PID3.P	P -value (Gain) for controller, parameter set up 3, spare.	Vtis	#		
337	PC330.PID3.I	I - time (Integration) for controller, parameter set up 3, spare.	Vtis	sec		
338	PC330.PID3.D	D - time (Derivation) for controller, parameter set up 3, spare.	Vtis	sec		
339	PC330_spare	Spare	Vtis			
340	PC827.PID1.P	P -value (Gain) for controller, parameter set up 1, used for high capacity.	Common	#		
341	PC827.PID1.I	I - time (Integration) for controller, parameter set up 1, used for high capacity.	Common	sec		
342	PC827.PID1.D	D - time (Derivation) for controller, parameter set up 1, used for high capacity.	Common	sec		
343	PC827.PID2.P	P -value (Gain) for controller, parameter set up 2, used for low capacity.	Common	#		
344	PC827.PID2.I	I - time (Integration) for controller, parameter set up 2, used for low capacity.	Common	sec		
345	PC827.PID2.D	D - time (Derivation) for controller, parameter set up 2, used for low capacity.	Common	sec		
346	PC827.PID3.P	P -value (Gain) for controller, parameter set up 3, spare.	Common	#		
347	PC827.PID3.I	I - time (Integration) for controller, parameter set up 3, spare.	Common	sec		
348	PC827.PID3.D	D - time (Derivation) for controller, parameter set up 3, spare.	Common	sec		
349	PC827_spare	Spare	Common			
350	PC827_2.PID1.P	P -value (Gain) for controller, parameter set up 1, used for high capacity.	Common	#		
351	PC827_2.PID1.I	I - time (Integration) for controller, parameter set up 1, used for high capacity.	Common	sec		
352	PC827_2.PID1.D	D - time (Derivation) for controller, parameter set up 1, used for high capacity.	Common	sec		
353	PC827_2.PID2.P	P -value (Gain) for controller, parameter set up 2, used for low capacity.	Common	#		
354	PC827_2.PID2.I	I - time (Integration) for controller, parameter set up 2, used for low capacity.	Common	sec		
355	PC827_2.PID2.D	D - time (Derivation) for controller, parameter set up 2, used for low capacity.	Common	sec		
356	PC827_2.PID3.P	P -value (Gain) for controller, parameter set up 3, spare.	Common	#		
357	PC827_2.PID3.I	I - time (Integration) for controller, parameter set up 3, spare.	Common	sec		
358	PC827_2.PID3.D	D - time (Derivation) for controller, parameter set up 3, spare.	Common	sec		
359	PC827_2_spare	Spare	Common			

Rev.	Date/ Sign.	Description
0	0	
0		
0		
0		
0		

Tetra Therm Aseptic VTIS

PID recipe

Doc.type:	PROGRAM RECIPE LIST			
Dept.	Design/Drawn	Template doc. rev.	Date	Revision
BU DBF	**TOJ/**	**1.00.13**	**2016-09-28**	**-**

Tetra Pak

LUND SWEDEN

PLCRP5844130774

This document and its content are our exclusive property and must not be copied, reproduced, transmitted or communicated to any other party or used for purposes not expressly permitted by us. Only to the extent expressly agreed by us this document may constitute a contractual obligation on our part.

PID recipe list.

Recipe #

Reg.	Name	Description	Used in	Unit:	Original	Changed
360	PC305.PID1.P	P -value (Gain) for controller, parameter set up 1, used for high capacity.	Vtis	#		
361	PC305.PID1.I	I - time (Integration) for controller, parameter set up 1, used for high capacity.	Vtis	sec		
362	PC305.PID1.D	D - time (Derivation) for controller, parameter set up 1, used for high capacity.	Vtis	sec		
363	PC305.PID2.P	P -value (Gain) for controller, parameter set up 2, used for low capacity.	Vtis	#		
364	PC305.PID2.I	I - time (Integration) for controller, parameter set up 2, used for low capacity.	Vtis	sec		
365	PC305.PID2.D	D - time (Derivation) for controller, parameter set up 2, used for low capacity.	Vtis	sec		
366	PC305.PID3.P	P -value (Gain) for controller, parameter set up 3, spare.	Vtis	#		
367	PC305.PID3.I	I - time (Integration) for controller, parameter set up 3, spare.	Vtis	sec		
368	PC305.PID3.D	D - time (Derivation) for controller, parameter set up 3, spare.	Vtis	sec		
369	PC305_spare	Spare	Vtis			
370	TC50.PID1.P	P -value (Gain) for controller, parameter set up 1, used for high capacity.	Flex	#		
371	TC50.PID1.I	I - time (Integration) for controller, parameter set up 1, used for high capacity.	Flex	sec		
372	TC50.PID1.D	D - time (Derivation) for controller, parameter set up 1, used for high capacity.	Flex	sec		
373	TC50.PID2.P	P -value (Gain) for controller, parameter set up 2, used for low capacity.	Flex	#		
374	TC50.PID2.I	I - time (Integration) for controller, parameter set up 2, used for low capacity.	Flex	sec		
375	TC50.PID2.D	D - time (Derivation) for controller, parameter set up 2, used for low capacity.	Flex	sec		
376	TC50.PID3.P	P -value (Gain) for controller, parameter set up 3, spare.	Flex	#		
377	TC50.PID3.I	I - time (Integration) for controller, parameter set up 3, spare.	Flex	sec		
378	TC50.PID3.D	D - time (Derivation) for controller, parameter set up 3, spare.	Flex	sec		
379	TC50_spare	Spare	Flex			
380	TC08M.PID1.P	P -value (Gain) for controller, parameter set up 1, used for high capacity.	Flex	#		
381	TC08M.PID1.I	I - time (Integration) for controller, parameter set up 1, used for high capacity.	Flex	sec		
382	TC08M.PID1.D	D - time (Derivation) for controller, parameter set up 1, used for high capacity.	Flex	sec		
383	TC08M.PID2.P	P -value (Gain) for controller, parameter set up 2, used for low capacity.	Flex	#		
384	TC08M.PID2.I	I - time (Integration) for controller, parameter set up 2, used for low capacity.	Flex	sec		
385	TC08M.PID2.D	D - time (Derivation) for controller, parameter set up 2, used for low capacity.	Flex	sec		
386	TC08M.PID3.P	P -value (Gain) for controller, parameter set up 3, spare.	Flex	#		
387	TC08M.PID3.I	I - time (Integration) for controller, parameter set up 3, spare.	Flex	sec		
388	TC08M.PID3.D	D - time (Derivation) for controller, parameter set up 3, spare.	Flex	sec		
389	TC08M_spare	Spare	Flex			
390	PIDSpare03.PID1.P	P -value (Gain) for controller, parameter set up 1, used for high capacity.	Common	#		
391	PIDSpare03.PID1.I	I - time (Integration) for controller, parameter set up 1, used for high capacity.	Common	sec		
392	PIDSpare03.PID1.D	D - time (Derivation) for controller, parameter set up 1, used for high capacity.	Common	sec		
393	PIDSpare03.PID2.P	P -value (Gain) for controller, parameter set up 2, used for low capacity.	Common	#		
394	PIDSpare03.PID2.I	I - time (Integration) for controller, parameter set up 2, used for low capacity.	Common	sec		
395	PIDSpare03.PID2.D	D - time (Derivation) for controller, parameter set up 2, used for low capacity.	Common	sec		
396	PIDSpare03.PID3.P	P -value (Gain) for controller, parameter set up 3, spare.	Common	#		
397	PIDSpare03.PID3.I	I - time (Integration) for controller, parameter set up 3, spare.	Common	sec		
398	PIDSpare03.PID3.D	D - time (Derivation) for controller, parameter set up 3, spare.	Common	sec		
399	PIDSpare03_spare	Spare	Common			

Rev.	Date/ Sign.	Description
0	0	
0		
0		
0		
0		

Tetra Therm Aseptic VTIS

PID recipe

Doc.type:	PROGRAM RECIPE LIST				
Dept.	Design/Drawn	Template doc. rev.	Date	Revision	
BU DBF	**TOJ/**	**1.00.13**	**2016-09-28**	**-**	**PLCRP5844130774**

Tetra Pak

LUND **SWEDEN**

This document and its content are our exclusive property and must not be copied, reproduced, transmitted or communicated to any other party or used for purposes not expressly permitted by us. Only to the extent expressly agreed by us this document may constitute a contractual obligation on our part.

Product/Model: **Tetra Therm Aseptic VTIS** Capacity:
Order No: **124198860** Machine number: **T5844130774**
Project: **Candia** Company name: **Tetra Pak**

Country: **France**

Issued by:	Issue date:
Approval by:	
Rev:	Date of rev:
Approval of rev:	Doc vers no: **1.00.05**

Programming of parameters for Danfoss Frequency Drive FC300

No field bus connection	**X**

Important information
Make sure that the switch (S201) for analogue input in the frequency converter is in position I (current)
Reset of all parameters to factory setting see Component Documentation for Danfoss frequency converter
The table below shows ONLY the parameters that differ from factory setting

Number	Description	Factory setting	New setting	SX02	SX03	SX04	SX305	SX06	SX308	SX09	SX10	
Group 14, Special function												
14-22	Operation Mode	[0] Normal operation	[2] Initialize									
Group 0, Operation and Display												
0-02	Motor Speed Unit	[0] RPM	[1] Hz									
0-24	Display Line 3 Large	[1602] Reference %	[1662] Analog Input 53									
Group 1, Load and Motor												
1-03	Torque Characteristics	[0] Constant torque	[1] Variable Torque *Only centrifugal pumps*									
1-04	Overload Mode	[0] High torque	[1] Normal torque *Only centrifugal pumps and Motor ≥ 11 kW and bigger than inverter*									
1-20	Motor Power [kW] (see motor plate)			15			15		15		7,5	
1-22	Motor Voltage (V) (see motor plate)			400			400		400		400	
1-23	Motor Frequency (Hz)) (see motor plate)			50			50		50		50	
1-24	Motor Current (A) (see motor plate)			26,2			26,2		26,2		13,5	
1-25	Motor Nominal Speed (rpm) (see motor plate)			2945			2945		2945		2903	
1-29	Automatic Motor Adaptation (AMA)	[0] Off	[1] Enable Complete AMA									
1-90	Motor Thermal Protection	[0] No protection	[4] ETR Trip 1									
Group 3, Reference and Ramps												
3-00	Reference Range	[1] -Max - + Max	[0] Min.-Max									
3-02	Minimum Reference	0,000 Hz	10.000 Hz									
3-03	Maximum Reference	50,000 Hz	xx Hz	Set maximum limit without exceeding max ampere value at motorplate								
3-41	Ramp 1 Ramp up	Size related	3sec									
3-42	Ramp 1 Ramp Down	-	3sec									
Group 5, Digital In/Out												
5-40	Function Relay	[0] No operation	[5] VLT Running									
Group 6, Analog In/Out												
6-12	Terminal 53 Low Current	0.14 mA	4mA									
6-15	Terminal 53 High Ref./Feedb. Value	1500.000 Unit	(same as 3-03) Hz									

NOTE: Save parameter settings to LCP			
Group 0, Operation and Display			
0-50	LCP Copy	[0] No Copy	[1] Transfer to LCP all parameters

Product/Model: **Tetra Therm Aseptic VTIS** Capacity: **0**
Order No: **124198860** Machine number: **T5844130774**
Project: **Candia** Company name: **Tetra Pak**

Country: **France**

Issued by:	Issue date:
Approval by:	
Rev:	Date of rev:
Approval of rev:	Doc vers no: **1.00.05**

Parameter setup of pressure switch, Endress + Hauser PTP31

Parameters that differ from factory settings are **bolded**

			PT66
Function group	**Parameter**		
Base	**Basic setting**	**Factory setting**	**New setting**
	UNIT	BAR	BAR
	ZERO	0.0	0.0
	GET'Z	0.0	0.0
	TAU	0.0	**2.0**
	DISP	PV	PV
	DESI	NO	NO
	SAFC	NO	NO
OUT	**Output 1**		

OUT2	**Output 2**		

4-20	**Analog output**	**Factory setting**	**New setting**
	SETL	0.0	0.0
	SETU	0.0	**10.0**
	GETL	0.0	0.0
	GETU	0.0	0.0
	FCUR	Max	**MIN.**
SERV	**Service functions**	**Factory setting**	**New setting**
	LOCK	0.0	**NO**
	CODE	0.0	0.0
	PRES	No	NO
	REV.C	0.0	0.0
	SIM	Off	Off
	SIM2	Off	Off
	MAX.	0.0	0.0
	MIN.	0.0	0.0

After programming is complete.
1. Go to BASE and hold E-button until SAVE is displayed.
2. Push + to select YES.
3. Push E again to save.

Product/Model: **Tetra Therm Aseptic VTIS** Capacity: **0**
Order No: **124198860** Machine number: **T5844130774**
Project: **Candia** Company name: **Tetra Pak**

Country: **France**

Issued by:	Issue date:
Approval by:	
Rev:	Date of rev:
Approval of rev:	Doc vers no: **1.00.05**

Parameter setup of Flow Transmitter Endress + Hauser Promag 50H

Parameters that differ from factory settings are **bolded**
Access code is 0050 for standard setup.
Access code is 4685 for service level access. Use when setting up CIP filter.

			FT02/FT04	FT03 (optional)	
Block	**Parameter**	**Factory setting**	**New setting**	**New setting**	**Unit**
SYSTEM UNITS	UNIT VOLUME FLOW	dm^3/m	**l/h**	**l/h**	
	UNIT VOLUME	dm^3	**l**	**l**	
	UNIT LENGTH	MILLIMETER	MILLIMETER	MILLIMETER	
OPERATION	LANGUAGE	ENGLISH	ENGLISH	ENGLISH	
	ACCESS CODE	0	0	0	
	DEF.PRIVATE CODE	50	50	50	
	STATUS ACCESS	LOCKED	LOCKED	LOCKED	
	ACCESS CODE CNTR	3	3	3	
USER INTERFACE	ASSIGN LINE 1	VOLUME FLOW	VOLUME FLOW	VOLUME FLOW	
	ASSIGN LINE 2	TOTALIZER 1	TOTALIZER 1	TOTALIZER 1	
	FORMAT	x.xxxx	x.xxxx	x.xxxx	
	DISPLAY DAMPING	3	3	3	s
	CONTRAST LCD	50	50	50	%
	BACKLIGHT	50	50	50	%
TOTALIZER 1	ASSIGN TOTALIZER	VOLUME FLOW	VOLUME FLOW	VOLUME FLOW	
	UNIT TOTALIZER	l	l	l	
	TOTALIZER MODE	BALANCE	BALANCE	BALANCE	
TOTALIZER 2	ASSIGN TOTALIZER	VOLUME FLOW	VOLUME FLOW	VOLUME FLOW	
	SUM	0	0	0	l
	OVERFLOW	0	0	0	E7 l
	UNIT TOTALIZER	l	l	l	
	TOTALIZER MODE	FORWARD	FORWARD	FORWARD	
HANDLING TOTAL	FAILSAFE ALL TOT	STOP	STOP	STOP	
CURRENT OUTPUT	ASSIGN CURRENT	VOLUME FLOW	VOLUME FLOW	VOLUME FLOW	
	CURRENT SPAN	4-20mA HART. NAM.	**4-20mA HART**	**4-20mA HART**	
	VALUE 20mA	36000	**18000**	**20000**	
	TIME CONSTANT	3.00	3.00	3.00	
	FAILSAFE MODE	MIN CURRENT	**MAX. CURRENT**	**MAX. CURRENT**	
	SIMULATION CURR.	OFF	OFF	OFF	
PULS/FREQ.OUT.	OPERATION MODE	PULSE	PULSE	PULSE	
	ASSIGN PULSE	VOLUME FLOW	VOLUME FLOW	VOLUME FLOW	
	PULSE VALUE	5.0000	**3.0 (see table)**	**2.0 (see table)**	l/P
	PULSE WIDTH	100.00	**300.00 (see table)**	**120.00 (see table)**	ms
	OUTPUT SIGNAL	PASSIVE/POSITIVE	PASSIVE/POSITIVE	PASSIVE/POSITIVE	
	FAILSAFE MODE	FALLBACK VALUE	FALLBACK VALUE	FALLBACK VALUE	
	SIMULATION PULSE	OFF	OFF	OFF	
COMMUNICATION	TAG NAME	--------	--------	--------	
	TAG DESCRIPTION	----------	----------	----------	
	FIELDBUS ADDRESS	0	0	0	
	HART PROTOCOL	ON	ON	ON	
	MANUFACT ID	ENDRESS+HAUSER	ENDRESS+HAUSER	ENDRESS+HAUSER	
	DEVICE ID	41 (hex)	41 (hex)	41 (hex)	
PROCESSPARAMETER	ASSIGN LF-CUTOFF	VOLUME FLOW	VOLUME FLOW	VOLUME FLOW	
	ON-VAL.LF-CUTOFF	180.0000	180.0000	180.0000	l/h
	OFFVAL.LF-CUTOFF	50	50	50	%
	EMPTY PIPE DET.	OFF	OFF	OFF	
	ECC	OFF	OFF	OFF	
	EPD ADJUSTMENT	OFF	OFF	OFF	
SYSTEM PARAMETER	INSTL.DIR.SENSOR	NORMAL FORWARD	NORMAL FORWARD	NORMAL FORWARD	
	MEASURING MODE	STANDARD	STANDARD	STANDARD	
	POS. ZERO RETURN	OFF	OFF	OFF	
	SYSTEM DAMPING	9	9	9	
	INTEGRATION TIME	20.0	20.0	20.0	ms
	SPECIAL FILTER	Standard	**Standard CIP**	**Standard CIP**	
	CIP SAMPLES	10	**20**	**20**	
	Delimeter	Low	**Strong**	**Strong**	

Product/Model: **Tetra Therm® Aseptic Flex**
Order No: **1234567**
Project: **Product of Skane**
Country: **Sweden**

Capacity: **21000 l/h**
Machine number: **T584XXXXXXX**
Company name: **Tetra Pak, Sweden**

Issued by:	Issue date:
Approval by:	
Rev:	Date of rev:
Approval of rev:	Doc vers no: **1.00.02**

Parameter setup of Differential Pressure Transmitter Endress + Hauser FMD 78

	Valid for:	TA VTIS	TA Flex with deaerator	TA Flex with iCIP 2.0	TA Flex with iCIP 2.0	TA Flex with iCIP 2.0	TA Flex with iCIP 2.0	TA Flex with iCIP 2.0	TA Flex with iCIP 2.0	
Parameters that differ from factory settings are **bolded**		**PT306**	**PT32**	**DPT11**	**DPT10**	**DPT9**	**DPT8**	**DPT6**	**DPT5**	
Block	**Parameter**	**Factory setting**	**New setting**	**New setting**	**New setting**	**New setting**	**New setting**	**New setting**	**New setting**	**Unit**
MEASURING MODE	MEASURING MODE	Pressure	Pressure	Pressure	Pressure	Pressure	Pressure	Pressure	Pressure	Pressure	
OPERATING MENU/SETTINGS/BASIC SETUP	PRESS. ENG. UNIT	mbar	mbar	mbar	**bar**	**bar**	**bar**	**bar**	**bar**	**bar**	
	SET LRV	0	**0**	**0**	**0**	**0**	**0**	**0**	**0**	**0**	mbar/ bar
	SET URV	500	**300**	**200**	*****	*****	*****	*****	*****	*****	mbar/ bar
	GET LRV	Abort	Abort	Abort	Abort	Abort	Abort	Abort	Abort	Abort	Abort	
	GET URV	Abort	Abort	Abort	Abort	Abort	Abort	Abort	Abort	Abort	Abort	
	DAMPING VALUE	2.0	1.0	1.0	1.0	1.0	1.0	1.0	1.0	1.0	sec
OPERATING MENU/SETTINGS/POS. ADJ.	POS. ZERO ADJUST	0	**Confirm**	**Confirm**	**Confirm**	**Confirm**	**Confirm**	**Confirm**	**Confirm**	**Confirm**	
OPERATING MENU/OUTPUT	OUTPUT CURRENT	---	---	---	---	---	---	---	---	---	
	CURR.CHARACT.	Linear	Linear	Linear	Linear	Linear	Linear	Linear	Linear	Linear	Linear	
	OUTPUT FAIL MODE	Max Alarm	**Min Alarm**	**Min Alarm**	Max Alarm	Max Alarm	Max Alarm	Max Alarm	Max Alarm	Max Alarm	
	ALT. CURR. OUTPUT	Normal	Normal	Normal	Normal	Normal	Normal	Normal	Normal	Normal	
	SET MAX. ALARM	22.00	22.00	22.00	22.00	22.00	22.00	22.00	22.00	22.00	
	SET MIN CURRENT	3.8	3.8	3.8	3.8	3.8	3.8	3.8	3.8	3.8	

Product/Model: **Tetra Therm Aseptic VTIS** Capacity: **0**
Order No: **124198860** Machine number: **T5844130774**
Project: **Candia** Company name: **Tetra Pak**

Country: **France**

Issued by:	Issue date:
Approval by:	
Rev:	Date of rev:
Approval of rev:	Doc vers no: **1.00.05**

Parameter setup of Conductivity Transmitter Endress + Hauser CLD132

Label name: (e.g QT76):
The setting are made in 2 steps;
1) Calibration
2) Quick set-up
Parameters that differ from factory settings are **bolded**

1) Calibration

Coding			Field	Selection or range (factory settings bold)	Display	Info
C			Function group CALIBRATION		CAL C CALIBRAT	Calibration settings.
	C1 (1)		Compensation of residual coupling	Airs = Airset (1) Cellc = cell constant (2) InstF = installation factor (3)	CAL HOLD AirS C1 Calibrat	The calibration of the sensor is to be performed in air. The sensor must be dry.
Remove sensor from the medium and dry **completely**.					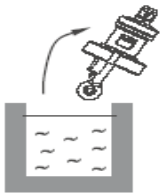	
		C111	Residual coupling start calibration (airset)	**current measured value**	CAL HOLD 0.0 µS/cm C111 AirSet	Start calibration with CAL.
		C112	Residual coupling is displayed (airset)	-80.0 ... 80.0 µS	CAL HOLD 5.3 µS/cm C112 AirSetVal	Residual coupling of measuring system (sensor and transmitter).
		C113	Calibration status is displayed	o.k. E xxx	CAL READY HOLD o.k. C113 Status	If the calibration status is not o.k., the second display line shows an explanation of the error.
		C114	Store calibration results?	yes no new	CAL READY HOLD yes C114 Store	If C113 = E xxx, then only no or **new**. If new, return to C. If yes/no, return to "Measurement".

1) Quick Set up

Press enter key

Enter code 22 to enter set up

Coding	Field	Factory setting	New setting	Unit
S	**Function group Service**			
S1	Selection of language	ENG	ENG	
A	**Function group SETUP 1**			
A1	Operating mode selection	cond = conductivity	cond = conductivity	
A2	Selection of concentration unit to be displayed	%	%	
A3	Selection of display format for concentration unit	XX.xx	**XXX.x**	
A4	Selection of unit to be displayed	auto	**mS/cm**	
A5	Enter cell constant for sensor connected	5,9	5,9	
A6	Installation factor	1	1	
A7	Enter measured value damping	1	1	
B	**Function group SETUP 2**			
B1	Selection of temperature sensor	Pt100	Pt100	
B2	Selection of temperature compensation type	lin = linear	lin = linear	
B3	Enter temperature coefficient α	2,1 %/K	2,1 %/K	
B4	Enter process temperature	25,0 °C	25,0 °C	
B5	Temperature sensor calibration	Entry and display of real temperature	Entry and display of real temperature	
B6	Temperature difference is displayed	0,0 °C	0,0 °C	
O	**Function group OUTPUT**			
O1	Selection of current output	Out1	Out1	
O2(1)	Enter linear characteristic	lin = linear	lin = linear	
O211	Selection of current range	4–20 mA	4–20 mA	
O212	0/4 mA value; enter corresponding measured value	0.00 µS/cm	0.00 µS/cm	
O213	20 mA value; enter corresponding measured value	2000 mS/cm	**200 mS/cm**	
O2(2)	Current output simulation	sim = simulation (2)	sim = simulation (2)	
O221	Enter simulation value	current value	current value	

Press PLUS and MINUS keys simultainously to return to measuring mode

Product/Model: **Tetra Therm Aseptic VTIS** Capacity: **0**
Order No: **124198860** Machine number: **T5844130774**
Project: **Candia** Company name: **Tetra Pak**

Country: **France**

Issued by:	Issue date:
Approval by:	
Rev:	Date of rev:
Approval of rev:	Doc vers no: **1.00.05**

Parameter setup of E/P regulator ITV1050/ITV2050

Label name: (e.g PX354):
Parameters that differ from factory settings are **bolded**
CAUTION!!
It is recommended that the settings are changed without supply pressure. The product operates as soon as maximum and minimum pressures are set and the <SET> key is pressed.

Set up of PX74

Coding	Field	Factory setting	New setting	Unit
F_1	Range at 4mA	0,00	0,00	MPa
F_2	Range at 20mA	0,90	**0,60**	MPa

Set up of PX78

Coding	Field	Factory setting	New setting	Unit
F_1	Range at 4mA	0,00	0,00	MPa
F_2	Range at 20mA	0,90	**0,60**	MPa

Set up of PX330

Coding	Field	Factory setting	New setting	Unit
F_1	Range at 4mA	0,00	0,00	MPa
F_2	Range at 20mA	0,90	**0,60**	MPa

Set up of PX354

Coding	Field	Factory setting	New setting	Unit
F_1	Range at 4mA	0,00	0,00	MPa
F_2	Range at 20mA	0,90	**0,60**	MPa

Product/Model: **Tetra Therm Aseptic VTIS** Capacity: **0**
Order No: **124198860** Machine number: **T5844130774**
Project: **Candia** Company name: **Tetra Pak**

Country: **France**

Issued by:	Issue date:
Approval by:	
Rev:	Date of rev:
Approval of rev:	Doc vers no: **1.00.05**

Parameter setup of Bardiani valve with Gemu positioner 1436 cPos

Label name: (e.g V56 or V57):
Parameters that differ from factory settings are **bolded**

Block	Parameter	Function	Value range	Factory setting	New setting V56	New setting V57
	Mode			Manual	**AUTO**	**AUTO**
1 Service	ActiveParaSet	Displays the current active parameter set	P1...P4	P1		
	Min-Pot-Max	Displays travel sensor position in percent				
	I w	Value of set value signal in mA				
	I x	Value of actual value signal in mA as a				
	W Proc X	Value of set value signal in relation to				
	W Pos X	Comparison of set value and valve position				
	Pot Abs	Travel sensor position				
	Valve 1:2:3:4	Displays the current position of the internal pilot valves				
	ProcCtrlIn	Deviation between set value and actual				
	ProcCtrlOut	Deviation between set value and actual				
	PosCtrlIn	Deviation between set value and actual				
	PosCtrlOut	Deviation between set value and actual value (positioner)				
	In w:x:1:2	Displays the current signals of the digital inputs				
	Relay K1:K2	Displays the current position of the				
	Code	Password entry	0...10000	0		
	Logout	Block access	OK			
	New Code: 1	Release the lowest priority	0...10000	0		
	New Code: 2	Release the medium priority	0...10000	0		
	New Code: 3	Release the top priority	0...10000	0		
	Error List	Displays error messages				
	hrs	Displays operating hours				
	Warnings	Superimpose warnings during operation	ON / OFF	ON		
	Errors	Superimpose errors during operation	ON / OFF	ON		
	SensTest	Switches sensor test on or off	Disable / Enable1	Disable		
	Clear Error List	Delete error list	OK			
	V:1.1.1.1	Displays current software version				
	S/N xxx	Displays current serial number				
	TAG1	11-digit ID number can be set				
	TAG2	11-digit ID number can be set				
Block	**Parameter**	**Function**	**Value range**	**Factory setting**	**New setting V56**	**New setting V57**
2 SetBasics	W-Input	Type of set value signal		4-20mA		
	X-Input	Type of actual value signal		4-20mA		
	Default	Reset to factory settings		Yes		
	PwrOnMode	Switch-on behaviour when the supply voltage is connected		safe		
	Init Valve	Starting initialisation		no init	**Run auto init. when installation/ after changes**	**Run auto init. when installation/ after changes**
	CalPointQty	Quantity of calibration points when initialising		9		
	D.Refresh	Time for display refresh		0.1s		
	Dlight	Setting the display lighting		On Key		

Block	Parameter	Function	Value range	Factory setting	New setting V56	New setting V57
2 SetBasics	AutoReturn	Time for an automatic return to the working level - Setup		5min		
	HelpText	Superimpose the help text		ON		
	HelpLanguage	Text language	D / GB / N	D	**GB**	**GB**
3 SetFunction	ProcCtrlMode			OFF		
	ProcCtrl					
	Proc-P			0,5		
	Proc-I			2,0s		
	Proc-D			0		
	Proc-T			1000ms		
	IxType			OFF		
	IxFilter			0,10s		
	PosCtrl					
	Pos P			1		
	Pos D			0		
	Pos T			100ms		
	MinPos			0		
	MaxPos	Stroke limitation = upper position of control range	0.0...100.0%	100.0%		
	CloseTight	Lower close tight function	0.0...10.0%	0.0%		
	OpenTight	Upper close tight function	90.0...100.0	100.0%		
	DeadBand	Permissible system deviation	0.1...25.0%	1.0%	**0,1%**	**0,1%**
	Digital Input	Submenu for setting the digital inputs				
	In W	Determines the function of the digital input “In		OFF		
	In X	Determines the function of the digital input “In X“		OFF		
	In 1	Determines the function of the digital input “In 1“		OFF		
	In 2	Determines the function of the digital		OFF		
	Digital Output	Submenu of digital outputs				
	K1 Switch	Defines the type of output	NC/NO	NO	**NC**	**NC**
	K1 Fn	Determines the function of output K1		no	**Error**	**Error**
	AlarmMaxK1	Switch point that switches after K1 is exceeded		10.0%		
	AlarmMinK1	Switch point that switches after K1 is		90.0%		
	SSE1Time	Delay time between error recognition and error message to K1	0.1…100.0s	5.0 s		
	K2 Switch	Defines the type of output	NC / NO	NO		
	K2 Fn	Determines the function of output K2		no		
	AlarmMaxK2	Switch point that switches after K2 is exceeded		10.0%		
	AlarmMinK2	Switch point that switches after K2 is	0.2...99.8%	90.0%		
	SSE2Time	Delay time between error recognition and error message to K2	0.1…100.0s	5.0 s		

Block	Parameter	Function	Value range	Factory setting	New setting V56	New setting V57
3 SetFunction	Error Time	Delay time between error recognition and error message	0.5...100.0s	0.2s		
	ErrorAction	Function of the process valve if there is an error message	Close/Open/	Close	**Open**	Close
	CpyParaSet	Copies parameters to various working memories (P1/P2/P3/P4)				
	AnalogOut	Sets the function of analog output	Poti / Ix	Poti		
4 SetCalibration	X-Direction	Determines the direction of the actual value signal (rising/falling)	rise / fall	rise		
	W-Direction	Determines the direction of the set	rise / fall	rise	**Fall**	Rise
	W-Function	The control curve is defined	lin./1:25/1:50/	lin.		
	Set W-free	10 control curve points can beprogrammed as desired				
	Y-Direction	Determines the direction of the process controller output (rising/falling)	rise / fall	rise		
	PotDir	Defines the direction of the actual value potentiometer of the valve	rise / fall	rise		
	OutMinPos	Valve position at actual value output signal 0/4mA	0.0...100.0%	0.0%		
	OutMaxPos	Valve position at actual value output signal 20mA	0.0...100.0%	100.0%		
	I Min W	Switch-off limit for cable break recognition of the set value	0.0...22.0 mA	3.5 mA		
	I Max W	Switch-off limit for excess current recognition of the set value	0.0...22.0 mA	20.5 mA		
	I Min X	Switch-off limit for cable break recognition of the actual value	0.0...22.0 mA	3.5 mA		
	I Max X	Switch-off limit for excess current recognition of the actual value	0.0...22.0 mA	20.5 mA		
	Scaling	Submenu for scaling the actual value and set value display				
	Scaling	Switches the scaled display on	ON / OFF	OFF		
	Decimalpoint	Determines the number of digits displayed after the decimal point	0...2	1		
	4mA	Defines the display which corresponds to a 0/4mA signal		0 %		
	20mA	Defines the display which corresponds to a 20mA signal		100 %		

Block	Parameter	Function	Value range	Factory setting	New setting V56	New setting V57
5 Communication	Fieldbus	Submenu for setting the Profibus connection	OFF	OFF		
	Webserver	Submenu for setting the server connection				
	ComPort	Defines the type of server connection	Auto (PC),Serial, Analog, PC/BT,	Auto (PC)		
	State	Shows the current connection status				

Product/Model: **Tetra Therm Aseptic VTIS** Capacity: **0**
Order No: **124198860** Machine number: **T5844130774**
Project: **Candia** Company name: **Tetra Pak**

Country: **France**

Issued by:	Issue date:
Approval by:	
Rev:	Date of rev:
Approval of rev:	Doc vers no: **1.00.05**

Parameter setup Turbidity meter ITM 3

Damping adjustment must be 1 or lower
Note: If high content cream product change
Meas. Range 1 to 0 - 200%

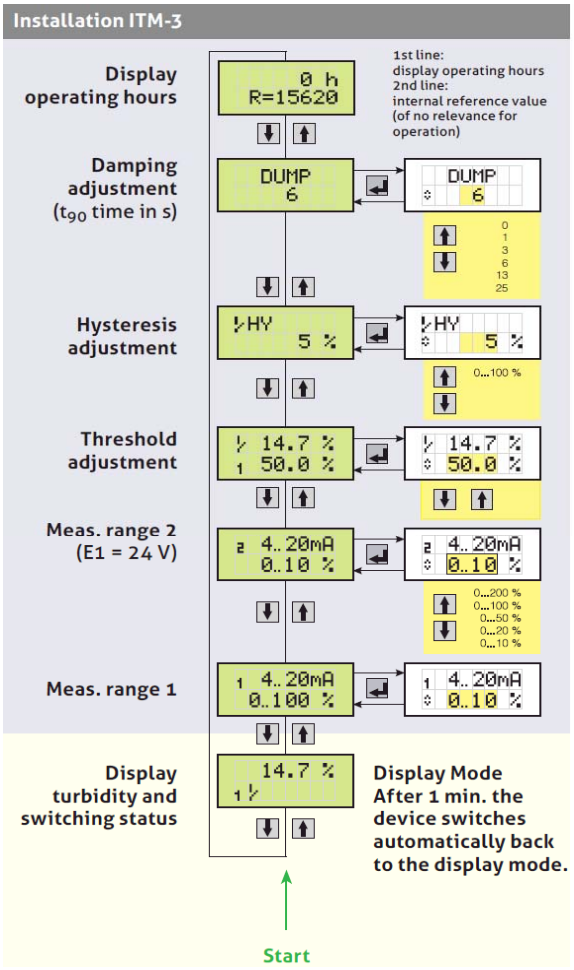

STERILISING

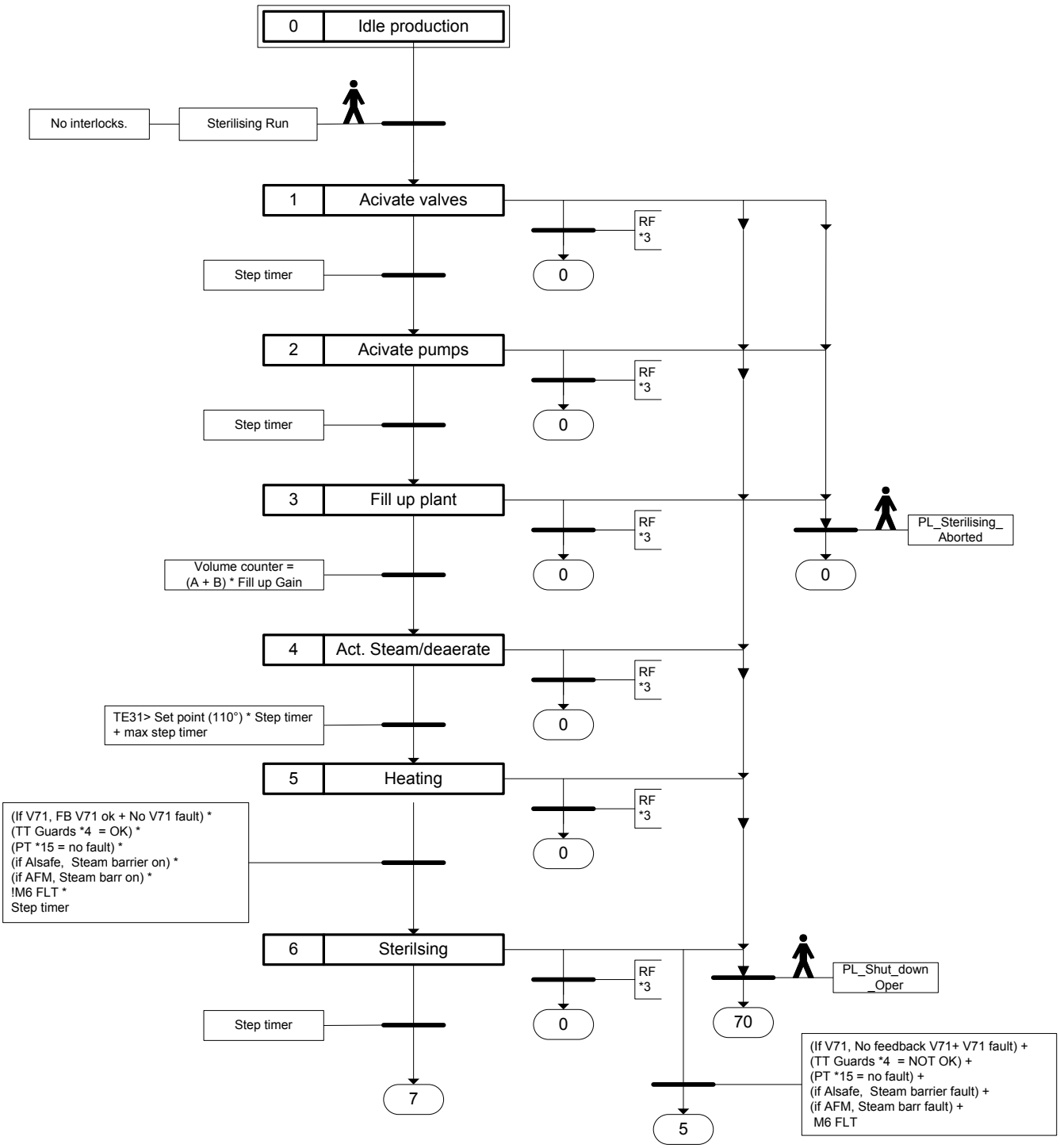

*3 = BTD_EMPTY_FLT + NO_POWER + EM_STOP + M2_FLT + M4_FLT + M5_FLT + (M6_FLT * !V51_CONF) + LT306_FLT + FUSE FLT

*4 = Guards.
TSL42 +TSL71 + TSL 381 +
(Options TSL47/51) + (Option TSL830/831) + (Option TSL901/902/909) + (Option TSL951) +
(Option TSL305/308/319/339/340/341/346/347) + (Option TSL502/504)

*15 = Options (PT61A Broken + PT62A Broken + PT63A Broken)

Rev.	Date/Sign.	Descrition

Tetra Therm Aseptic VTIS

Sterilising P1

Doc.type: Sequence Diagram

Dept.	Drawn	Appr.	Date		Doc. No.
BU DBF	Jönsson Rickard	SV	2016-11-15		SD5844130774

Tetra Pak

Tetra Pak Dairy & Beverage

Order No.

124198860

This document and its content are our exclusive property and must not be copied, reproduced, transmitted or communicated to any other party or used for purposes not expressly permitted by us. Only to the extent expressly agreed by us this document may constitute a contractual obligation on our part.

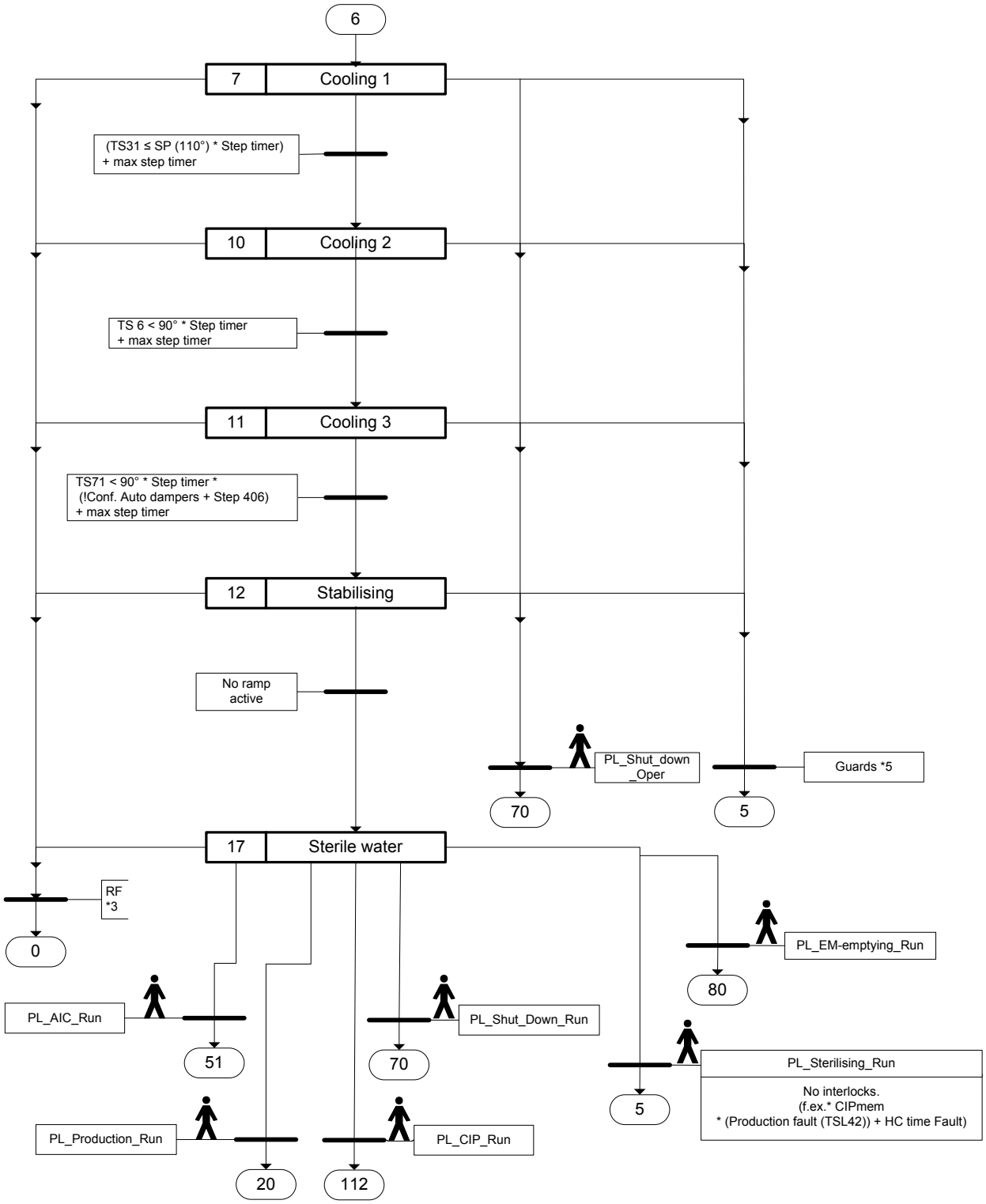

*3 = BTD_EMPTY_FLT + NO_POWER + EM_STOP + M2_FLT + M4_FLT + M5_FLT + (M6_FLT * !V51_CONF) + LT306_FLT + FUSE FLT

*5 = Guards.
Production fault (TSL42) + HC time Fault + Flow transmiter broken Fault + (Option HC time fault infuser)

Rev.	Date/Sign.	Descrition

Tetra Therm Aseptic VTIS

Sterilising P2

Doc.type: Sequence Diagram

Dept.	Drawn	Appr.	Date		Doc. No.
BU DBF	Jönsson Rickard	SV	2016-11-15		SD5844130774

Tetra Pak

Tetra Pak Dairy & Beverage

Order No.

124198860

This document and its content are our exclusive property and must not be copied, reproduced, transmitted or communicated to any other party or used for purposes not expressly permitted by us. Only to the extent expressly agreed by us this document may constitute a contractual obligation on our part.

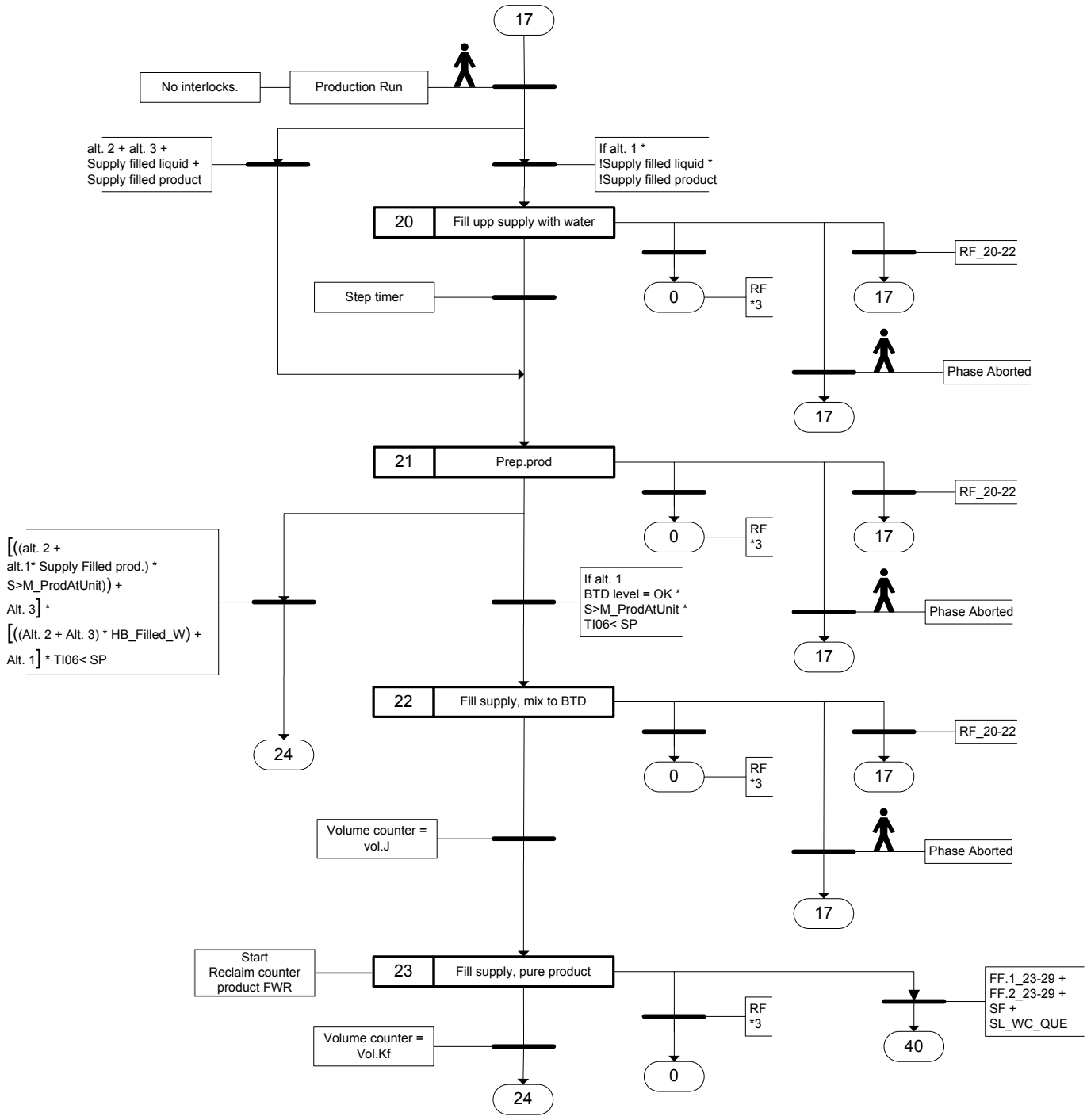

Alt. 1 = Installation for TPM when the machine is configured to take care of the filling and emptying of the supply line (j). The machine needs to utilise a number of extra program steps than when the source is handling the supply line.
Alt. 2 = Installation for TPM when the machine is configured for the situation that the source is taking care of the filling up and emptying of supply line.
Alt. 3 = Stand alone, when the machine is configured for the situation that the machine is installed to work with a minimum of signals. The filling and emptying of supply line (j) is manualy handled by operator.
In both alt: 2 and 3 some of the steps in the sequence are left out.

*3 = BTD_EMPTY_FLT + NO_POWER + EM_STOP + M2_FLT + M4_FLT + M5_FLT + (M6_FLT * !V51_CONF) + LT306_FLT + FUSE FLT

*2 = If Vtis + Plus + timing pump selected

RF_20-22 = Step 20 -22 * (M6_Fault + LL_BTD_Fault + Alsafe_fault + TSL42_Fault + HC_Time_Fault + LT504_Fault + Source fault + TSH331 + (Flow transmitter broken Fault *2)+ LB_ProdGuard)
FF.2_23-29 = Step 23 -28 * (M6_Fault + LL_BTD_Fault + Alsafe_fault + LL_Water_CIP_HB + TSH331)
FF.1_23-29 = Step 23 -28 * (TSL42_Fault + HC_Time_Fault + LT504_Fault + (Flow transmitter broken Fault *2) + LB_ProdGuard + TSHH331+ (Diff. Press. Broken *15))
SF = Step20-30 * !S>M_ProdEn +
[(alt.1 * (Step20 + Step31) * !S>N_WaterEn) + !alt.3 * (St23-29 * !S>M_ProdAtUnit)]

Rev.	Date/Sign.	Descrition

Tetra Therm Aseptic VTIS

Production P1

Doc.type: Sequence Diagram

Dept.	Drawn	Appr.	Date		Doc. No.
BU DBF	Jönsson Rickard	SV	2016-11-15		SD5844130774

Tetra Pak
Tetra Pak Dairy & Beverage

Order No.
124198860

This document and its content are our exclusive property and must not be copied, reproduced, transmitted or communicated to any other party or used for purposes not expressly permitted by us. Only to the extent expressly agreed by us this document may constitute a contractual obligation on our part.

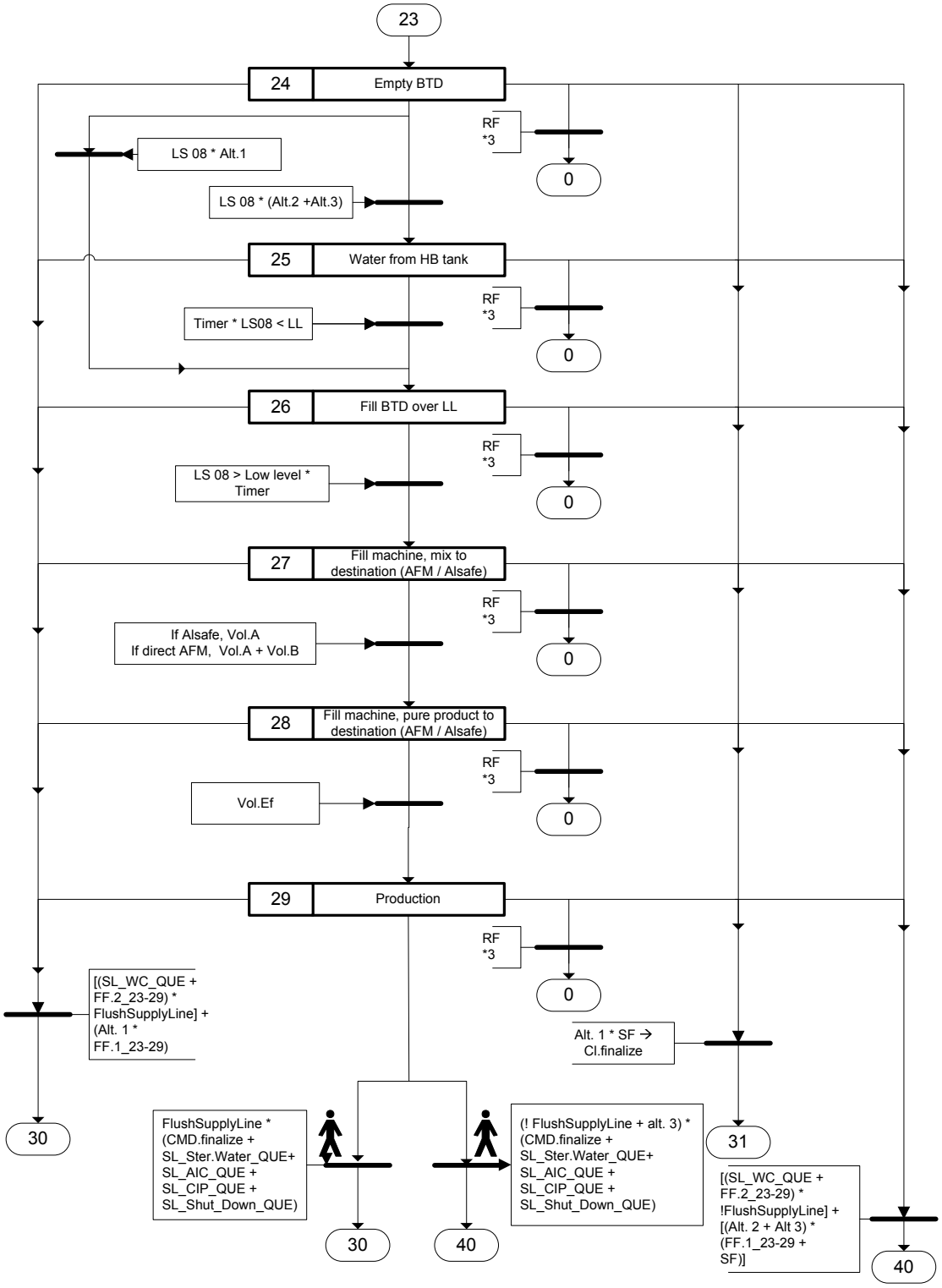

Alt. 1 = Installation for TPM when the machine is configured to take care of the filling and emptying of the supply line (j). The machine needs to utilise a number of extra program steps than when the source is handling the supply line.
Alt. 2 = Installation for TPM when the machine is configured for the situation that the source is taking care of the filling up and emptying of supply line.
Alt. 3 = Stand alone, when the machine is configured for the situation that the machine is installed to work with a minimum of signals. The filling and emptying of supply line (j) is manualy handled by operator.
In both alt: 2 and 3 some of the steps in the sequence are left out.

*3 = BTD_EMPTY_FLT + NO_POWER + EM_STOP + M2_FLT + M4_FLT + M5_FLT + (M6_FLT * !V51_CONF) + LT306_FLT + FUSE FLT

*2 = If Vtis + Plus + timing pump selected

If alt. 3 → FlushSupplyLine always = 0

RF_20-22 = Step 20 -22 * (M6_Fault + LL_BTD_Fault + Alsafe_fault + TSL42_Fault + HC_Time_Fault + LT504_Fault + Source fault + TSH331 + (Flow transmitter broken Fault *2)+ LB_ProdGuard)
FF.2_23-29 = Step 23 -28 * (M6_Fault + LL_BTD_Fault + Alsafe_fault + LL_Water_CIP_HB + TSH331)
FF.1_23-29 = Step 23 -28 * (TSL42_Fault + HC_Time_Fault + LT504_Fault + (Flow transmitter broken Fault *2) + LB_ProdGuard + TSHH331+ (Diff. Press. Broken *15))
SF = Step20-30 * !S>M_ProdEn +
[(alt.1 * (Step20 + Step31) * !S>D_WaterEn**)** + !alt.3 * (St23-29 * !S>M_ProdAtUnit)**]**

Rev.	Date/Sign.	Descrition

Tetra Therm Aseptic VTIS

Production P2

Doc.type: Sequence Diagram

Dept.	Drawn	Appr.	Date		Doc. No.
BU DBF	Jönsson Rickard	SV	2016-11-15		SD5844130774

Tetra Pak
Tetra Pak Dairy & Beverage

Order No.
124198860

This document and its content are our exclusive property and must not be copied, reproduced, transmitted or communicated to any other party or used for purposes not expressly permitted by us. Only to the extent expressly agreed by us this document may constitute a contractual obligation on our part.

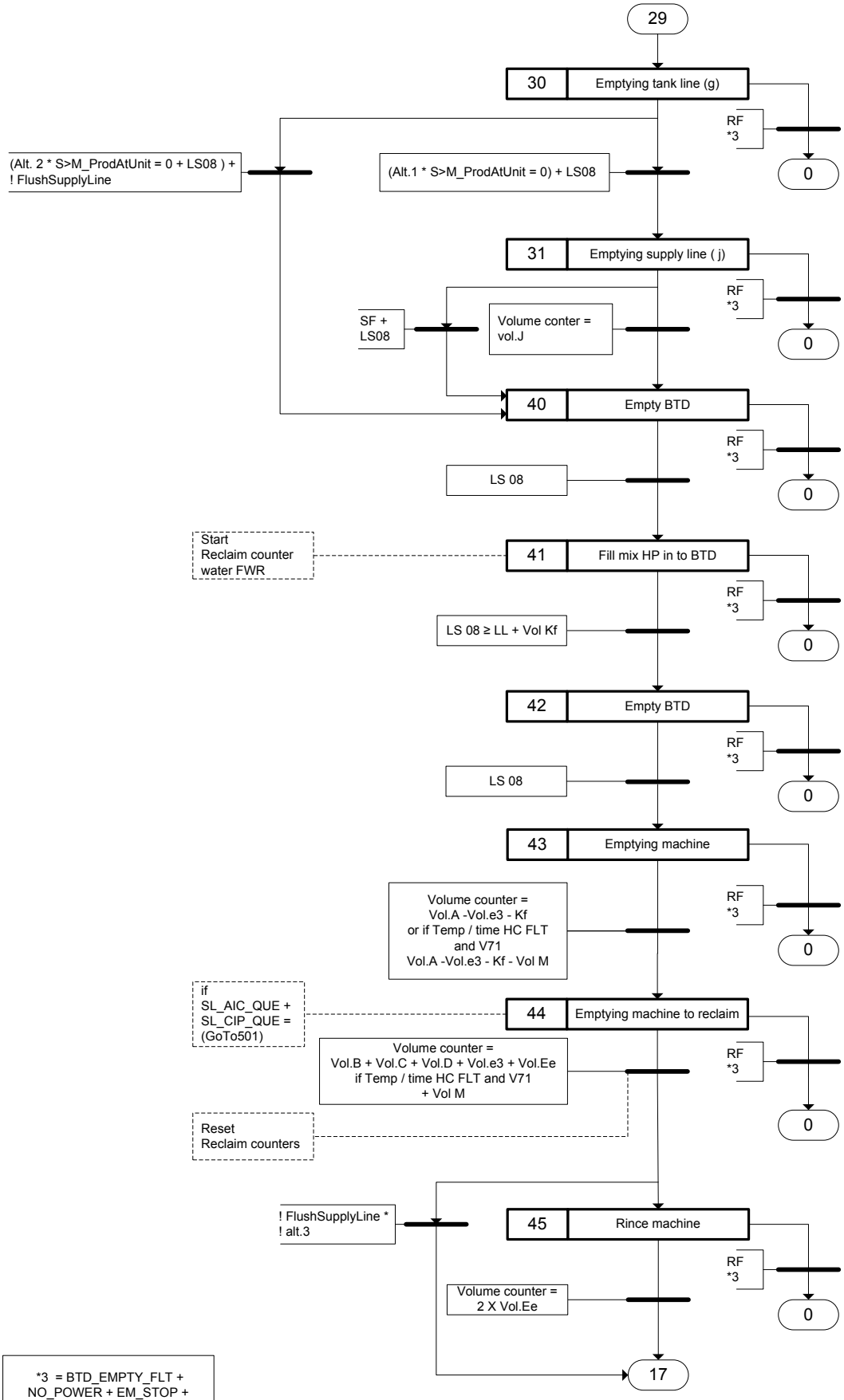

*3 = BTD_EMPTY_FLT + NO_POWER + EM_STOP + M2_FLT + M4_FLT + M5_FLT + (M6_FLT * !V51_CONF) + LT306_FLT + FUSE FLT

If alt. 3 → FlushSupplyLine always = 0

Rev.	Date/Sign.	Descrition

Tetra Therm Aseptic VTIS

Production P3

Doc.type: Sequence Diagram

Dept.	Drawn	Appr.	Date		Doc. No.
BU DBF	Jönsson Rickard	SV	2016-11-15		SD5844130774

Tetra Pak

Tetra Pak Dairy & Beverage

Order No.

124198860

This document and its content are our exclusive property and must not be copied, reproduced, transmitted or communicated to any other party or used for purposes not expressly permitted by us. Only to the extent expressly agreed by us this document may constitute a contractual obligation on our part.

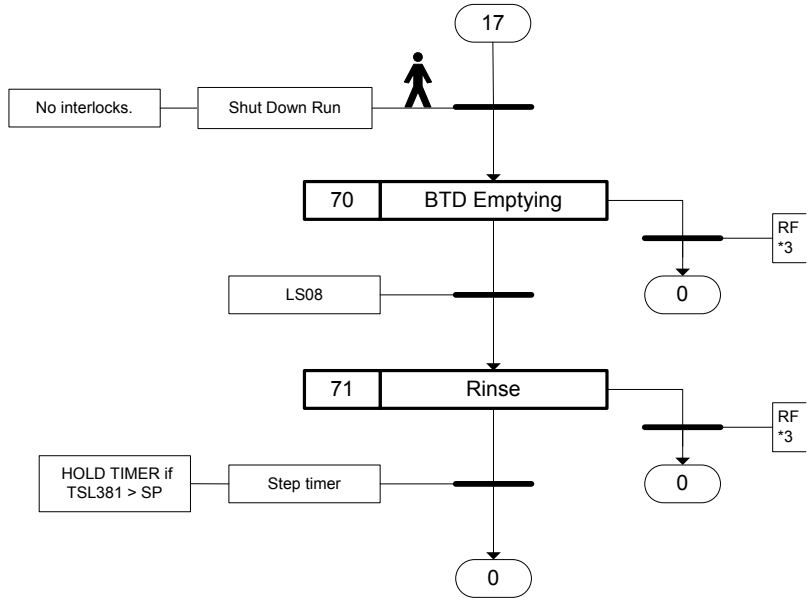

*3 = BTD_EMPTY_FLT + NO_POWER + EM_STOP + M2_FLT + M4_FLT + M5_FLT + (M6_FLT * !V51_CONF) + LT306_FLT + FUSE FLT

Rev.	Date/Sign.	Descrition

Tetra Therm Aseptic VTIS

Shut down

Doc.type: Sequence Diagram

Dept.	Drawn	Appr.	Date		Doc. No.
BU DBF	Jönsson Rickard	SV	2016-11-15		SD5844130774

Tetra Pak

Tetra Pak Dairy & Beverage

Order No.

124198860

This document and its content are our exclusive property and must not be copied, reproduced, transmitted or communicated to any other party or used for purposes not expressly permitted by us. Only to the extent expressly agreed by us this document may constitute a contractual obligation on our part.

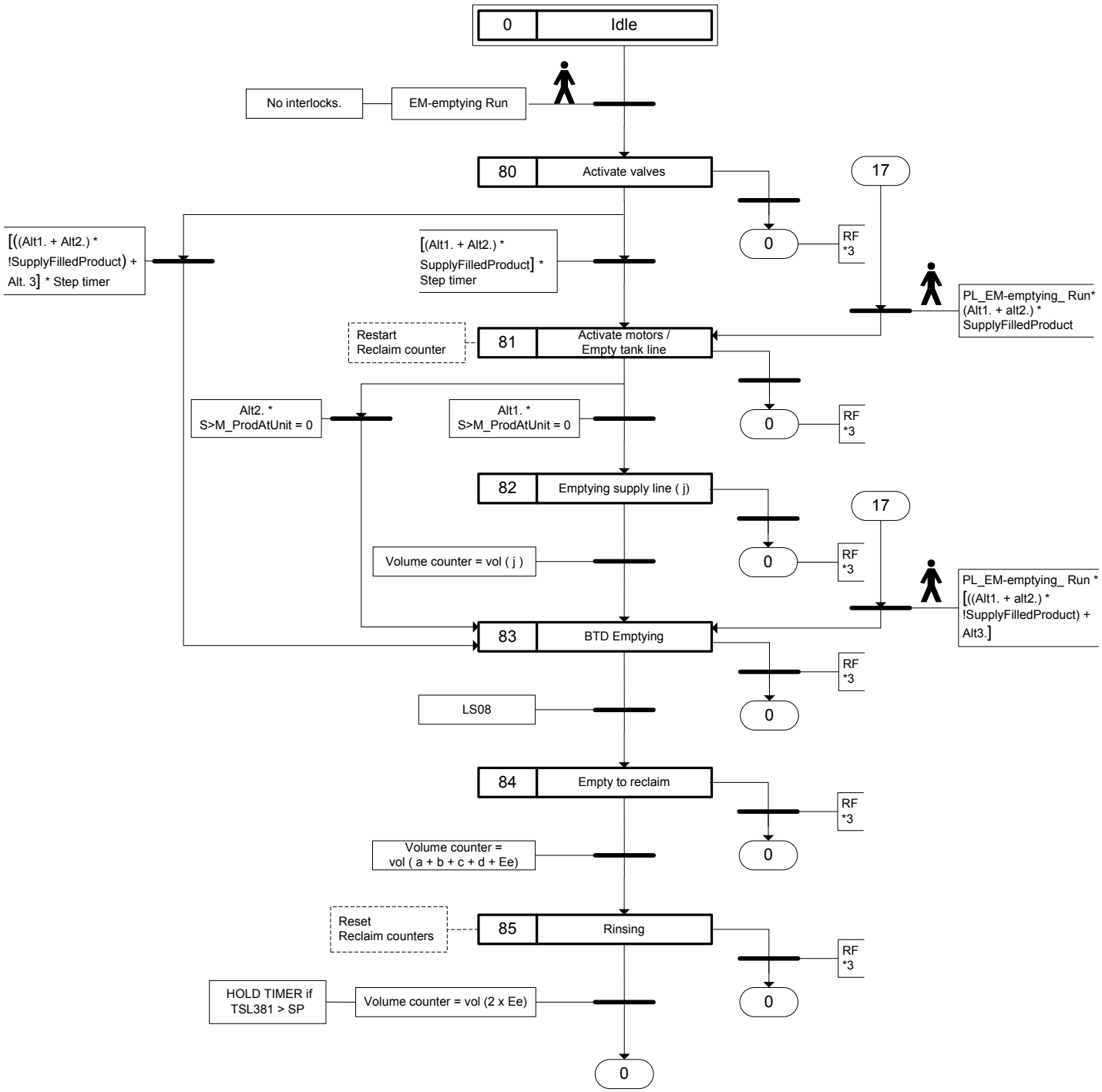

Alt. 1 = Installation for TPM when the machine is configured to take care of the filling and emptying of the supply line (j).
The machine needs to utilise a number of extra program steps than when the source is handling the supply line.
Alt. 2 = Installation for TPM when the machine is configured for the situation that the source is taking care of the filling up and emptying of supply line.
Alt. 3 = Stand alone, when the machine is configured for the situation that the machine is installed to work with a minimum of signals. The filling and emptying of supply line (j) is manualy handled by operator.
In both alt: 2 and 3 some of the steps in the sequence are left out.

*3 = BTD_EMPTY_FLT + NO_POWER + EM_STOP + M2_FLT + M4_FLT + M5_FLT + (M6_FLT * !V51_CONF) + LT306_FLT + FUSE FLT

Rev.	Date/Sign.	Descrition

Tetra Therm Aseptic VTIS

EM-empty

Doc.type: Sequence Diagram

Dept.	Drawn	Appr.	Date		Doc. No.
BU DBF	Jönsson Rickard	SV	2016-11-15		SD5844130774

Tetra Pak

Tetra Pak Dairy & Beverage

Order No.

124198860

This document and its content are our exclusive property and must not be copied, reproduced, transmitted or communicated to any other party or used for purposes not expressly permitted by us. Only to the extent expressly agreed by us this document may constitute a contractual obligation on our part.

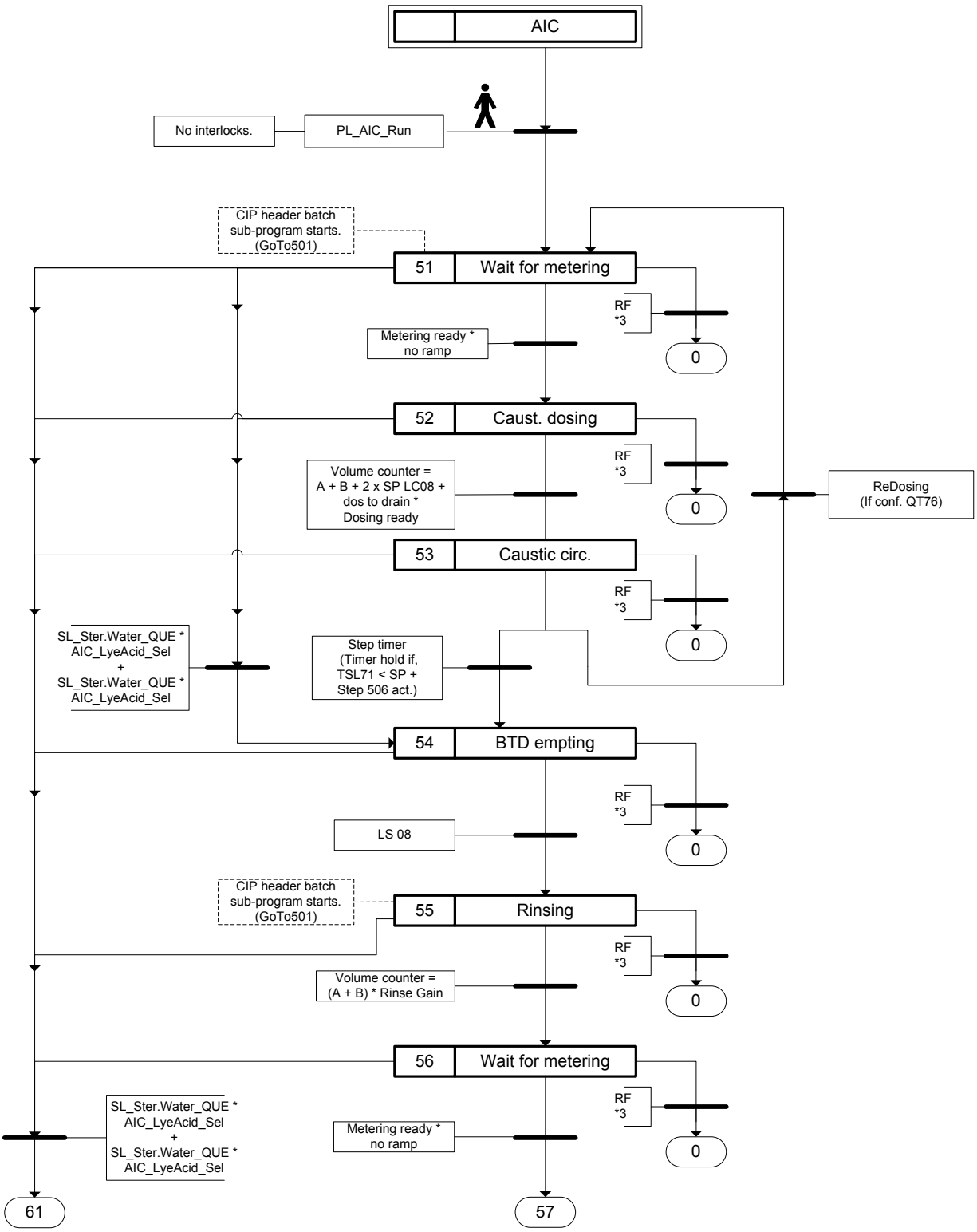

*3 = BTD_EMPTY_FLT + NO_POWER + EM_STOP + M2_FLT + M4_FLT + M5_FLT + (M6_FLT * !V51_CONF) + LT306_FLT + FUSE FLT
+ CONF. US ver. * CONF Aseptic (Not ESL) * (Alsafe Diverted CIP AIC (alarm131)
+ CONF. US ver. * FDV FB Fault (alarm 130))

Rev.	Date/Sign.	Descrition

Tetra Therm Aseptic VTIS

AIC CA-P1

Doc.type: Sequence Diagram

Dept.	Drawn	Appr.	Date		Doc. No.
BU DBF	**Jönsson Rickard**	**SV**	**2016-11-15**		**SD5844130774**

Tetra Pak

Tetra Pak Dairy & Beverage

Order No.

124198860

This document and its content are our exclusive property and must not be copied, reproduced, transmitted or communicated to any other party or used for purposes not expressly permitted by us. Only to the extent expressly agreed by us this document may constitute a contractual obligation on our part.

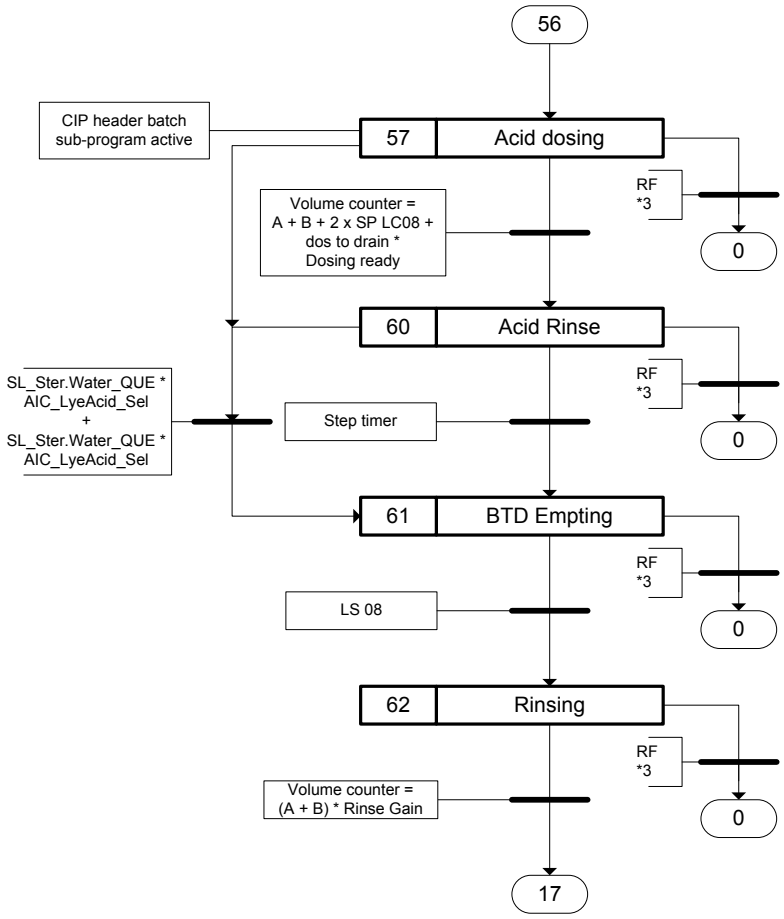

*3 = BTD_EMPTY_FLT + NO_POWER + EM_STOP + M2_FLT + M4_FLT + M5_FLT + (M6_FLT * !V51_CONF) +LT306_FLT + FUSE FLT
+ CONF. US ver. * CONF Aseptic (Not ESL) * (Alsafe Diverted CIP AIC (alarm131)
+ CONF. US ver. * FDV FB Fault (alarm 130))

Rev.	Date/Sign.	Descrition

Tetra Therm Aseptic VTIS

AIC CA-P2

Doc.type: Sequence Diagram

Dept.	Drawn	Appr.	Date		Doc. No.
BU DBF	**Jönsson Rickard**	**SV**	**2016-11-15**		**SD5844130774**

Tetra Pak

Tetra Pak Dairy & Beverage

Order No.

124198860

This document and its content are our exclusive property and must not be copied, reproduced, transmitted or communicated to any other party or used for purposes not expressly permitted by us. Only to the extent expressly agreed by us this document may constitute a contractual obligation on our part.

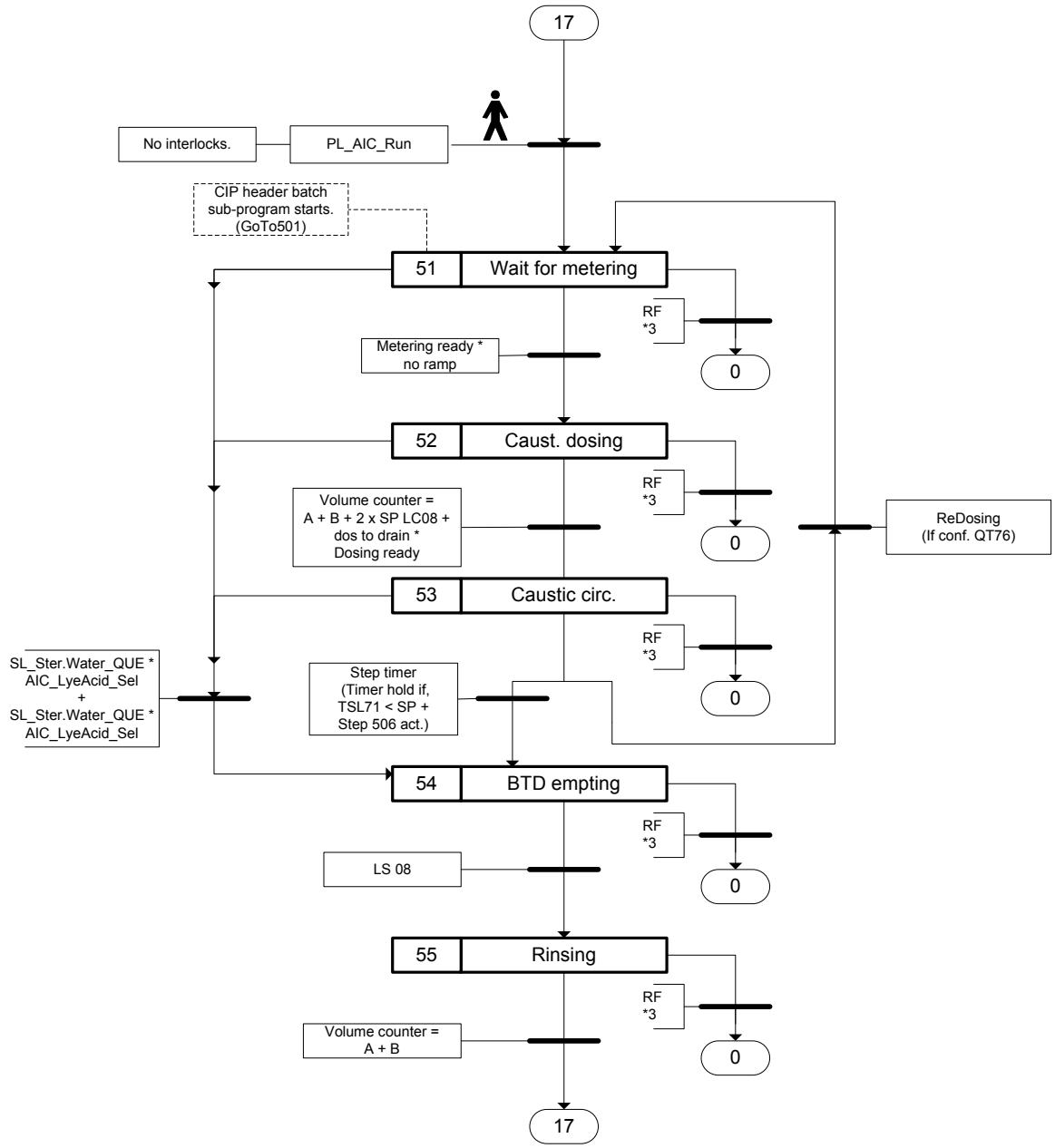

*3 = BTD_EMPTY_FLT + NO_POWER + EM_STOP + M2_FLT + M4_FLT + M5_FLT + (M6_FLT * !V51_CONF) + LT306_FLT + FUSE FLT
+ CONF. US ver. * CONF Aseptic (Not ESL) * (Alsafe Diverted CIP AIC (alarm131)
+ CONF. US ver. * FDV FB Fault (alarm 130))

Rev.	Date/Sign.	Descrition

Tetra Therm Aseptic VTIS

AIC C-P1

Doc.type: Sequence Diagram

Dept.	Drawn	Appr.	Date		Doc. No.
BU DBF	**Jönsson Rickard**	**SV**	**2016-11-15**		**SD5844130774**

Tetra Pak

Tetra Pak Dairy & Beverage

Order No.

124198860

This document and its content are our exclusive property and must not be copied, reproduced, transmitted or communicated to any other party or used for purposes not expressly permitted by us. Only to the extent expressly agreed by us this document may constitute a contractual obligation on our part.

CIP HEADER BATCH
SEQUENCE

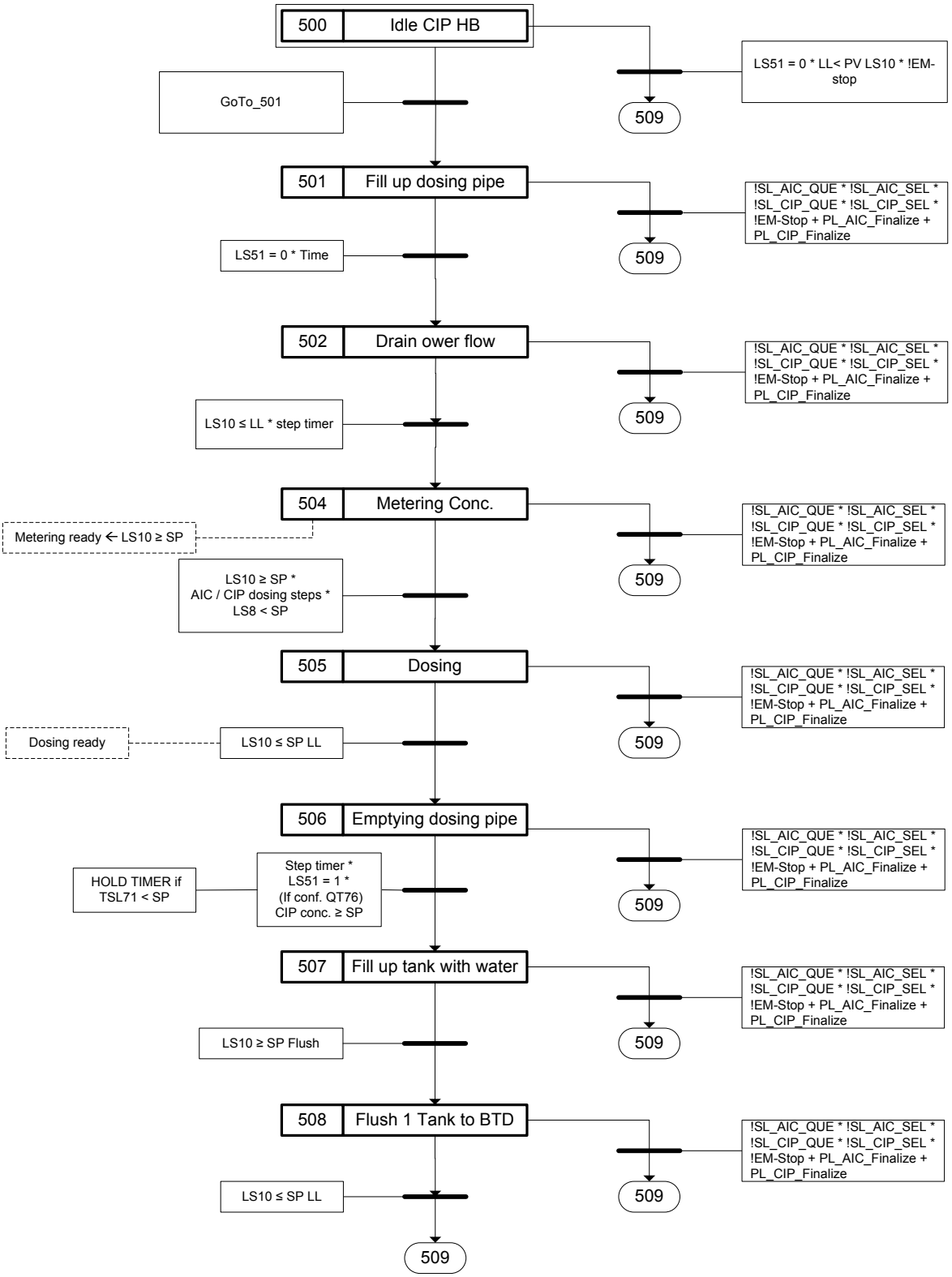

LS51 (empty tank) is NC ➔
LS51 =1 when no liquid in tank and = 0 when liquid in tank.

LS50 (over filled tank) is NC ➔
LS50 =1 when tank is not ower filled and = 0 when tank is over filled.

Rev.	Date/Sign.	Descrition

Tetra Therm Aseptic VTIS

Batch header P1

Doc.type: Sequence Diagram

Dept.	Drawn	Appr.	Date		Doc. No.
BU DBF	**Jönsson Rickard**	**SV**	**2016-11-15**		**SD5844130774**

Tetra Pak

Tetra Pak Dairy & Beverage

Order No.

124198860

This document and its content are our exclusive property and must not be copied, reproduced, transmitted or communicated to any other party or used for purposes not expressly permitted by us. Only to the extent expressly agreed by us this document may constitute a contractual obligation on our part.

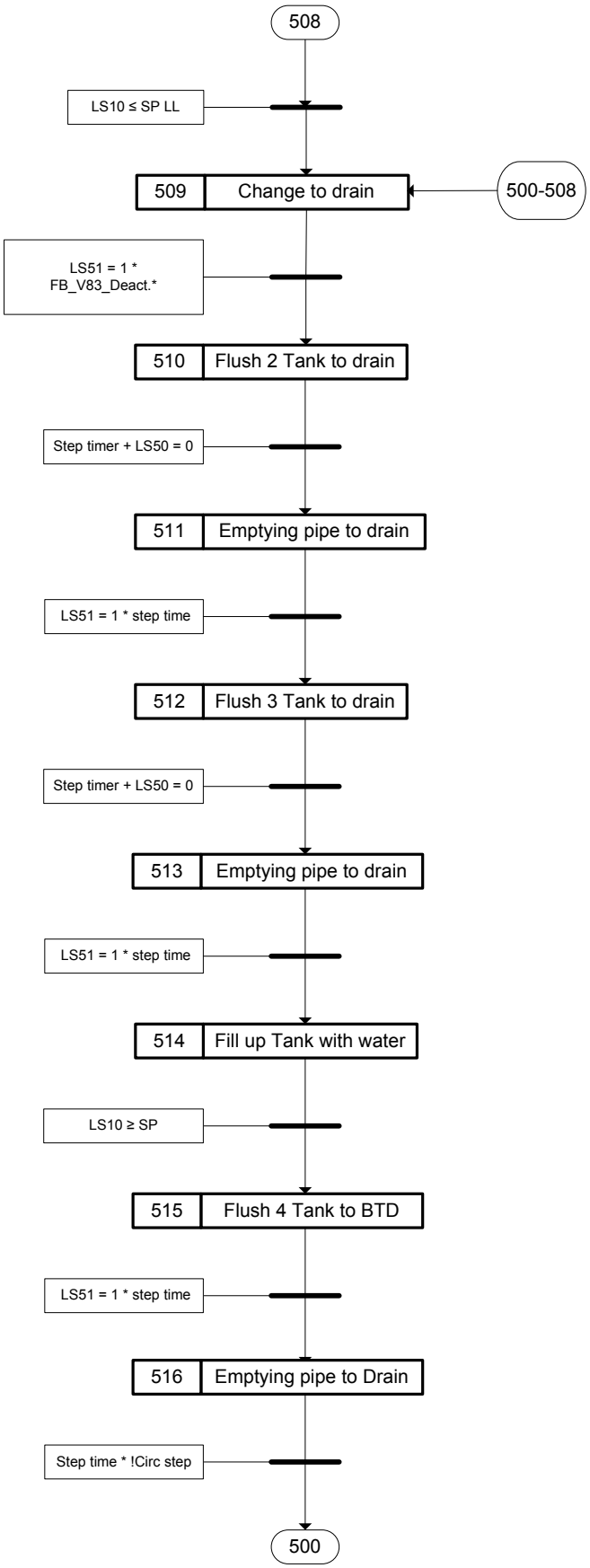

Rev.	Date/Sign.	Descrition

Tetra Therm Aseptic VTIS

Batch header P2

Doc.type: Sequence Diagram

Dept.	Drawn	Appr.	Date		Doc. No.
BU DBF	Jönsson Rickard	SV	2016-11-15		SD5844130774

Tetra Pak

Tetra Pak Dairy & Beverage

Order No.

124198860

This document and its content are our exclusive property and must not be copied, reproduced, transmitted or communicated to any other party or used for purposes not expressly permitted by us. Only to the extent expressly agreed by us this document may constitute a contractual obligation on our part.

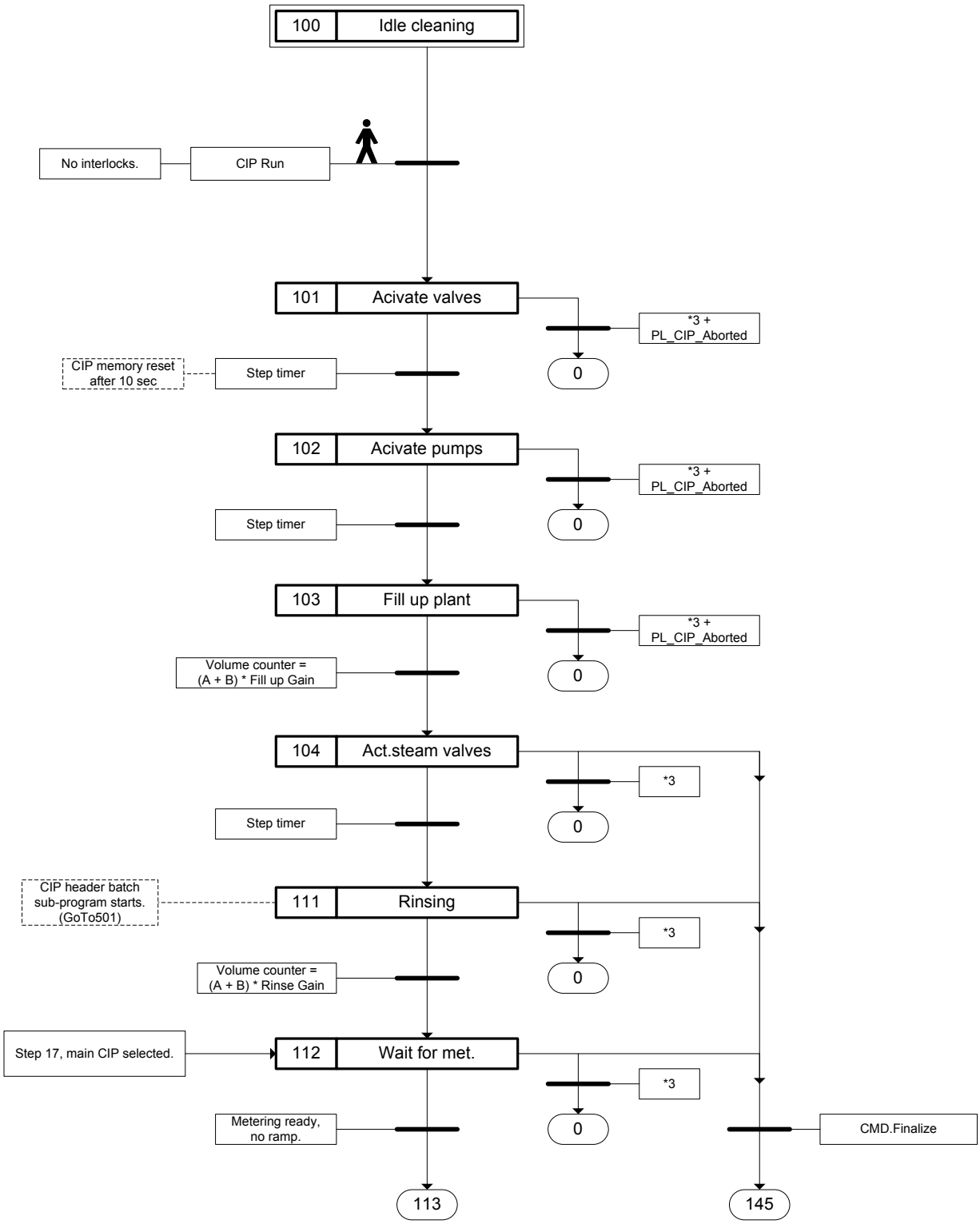

*3 = EM_Stop + Com_Power + FUSE FLT
+ CONF. US ver. * CONF Aseptic (Not ESL) * (Alsafe Diverted CIP AIC (alarm131)
+ CONF. US ver. * FDV FB Fault (alarm 130))

Rev.	Date/Sign.	Descrition

Tetra Therm Aseptic VTIS

VTIS CIP CCA P1

Doc.type: Sequence Diagram

Dept.	Drawn	Appr.	Date		Doc. No.
BU DBF	Jönsson Rickard	SV	2016-11-15		SD5844130774

Tetra Pak

Tetra Pak Dairy & Beverage

Order No.

124198860

This document and its content are our exclusive property and must not be copied, reproduced, transmitted or communicated to any other party or used for purposes not expressly permitted by us. Only to the extent expressly agreed by us this document may constitute a contractual obligation on our part.

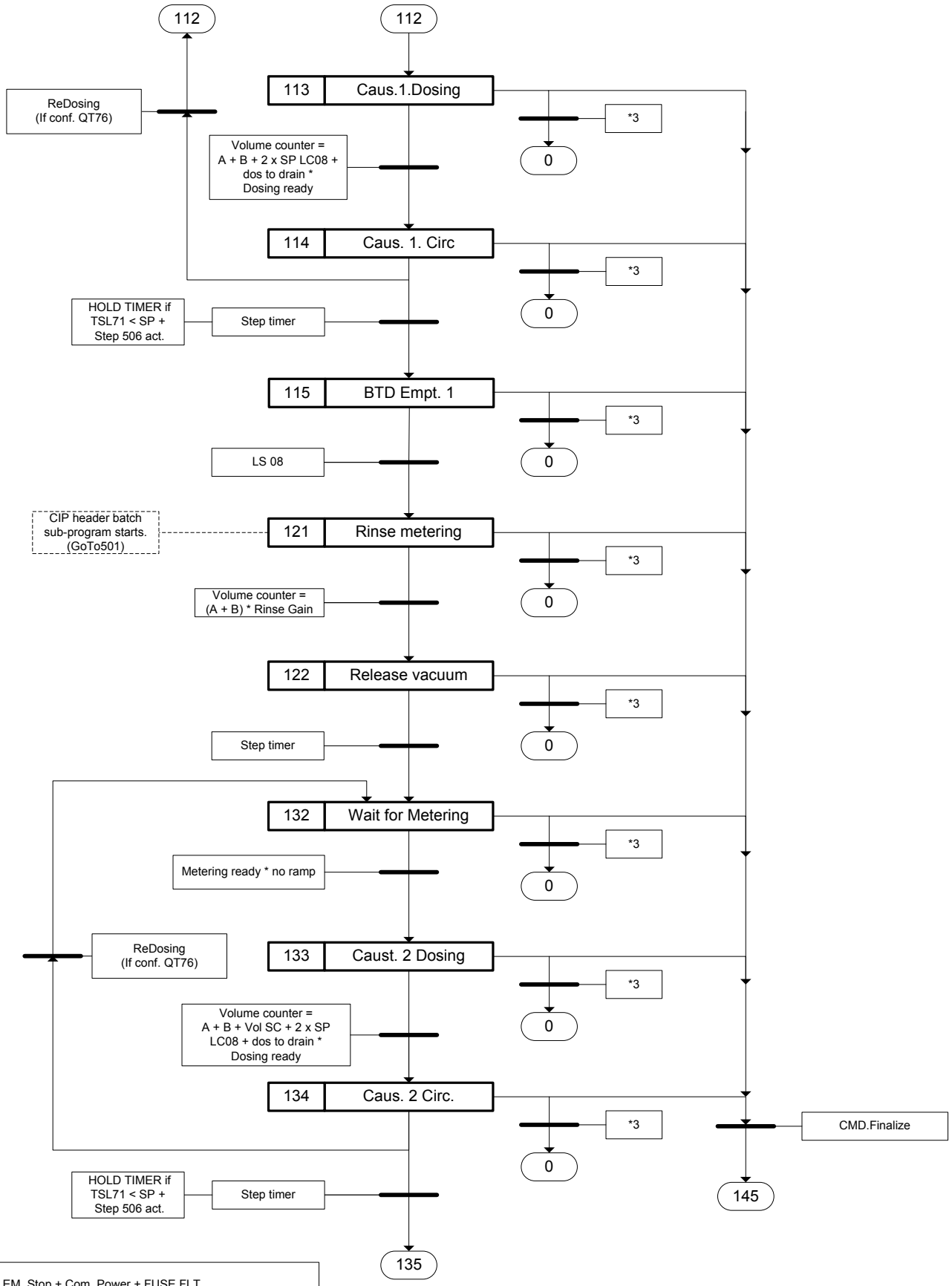

Rev.	Date/Sign.	Descrition

Tetra Therm Aseptic VTIS

VTIS CIP CCA P2

Doc.type: Sequence Diagram

Dept.	Drawn	Appr.	Date		Doc. No.
BU DBF	Jönsson Rickard	SV	2016-11-15		SD5844130774

Tetra Pak

Tetra Pak Dairy & Beverage

Order No.

124198860

This document and its content are our exclusive property and must not be copied, reproduced, transmitted or communicated to any other party or used for purposes not expressly permitted by us. Only to the extent expressly agreed by us this document may constitute a contractual obligation on our part.

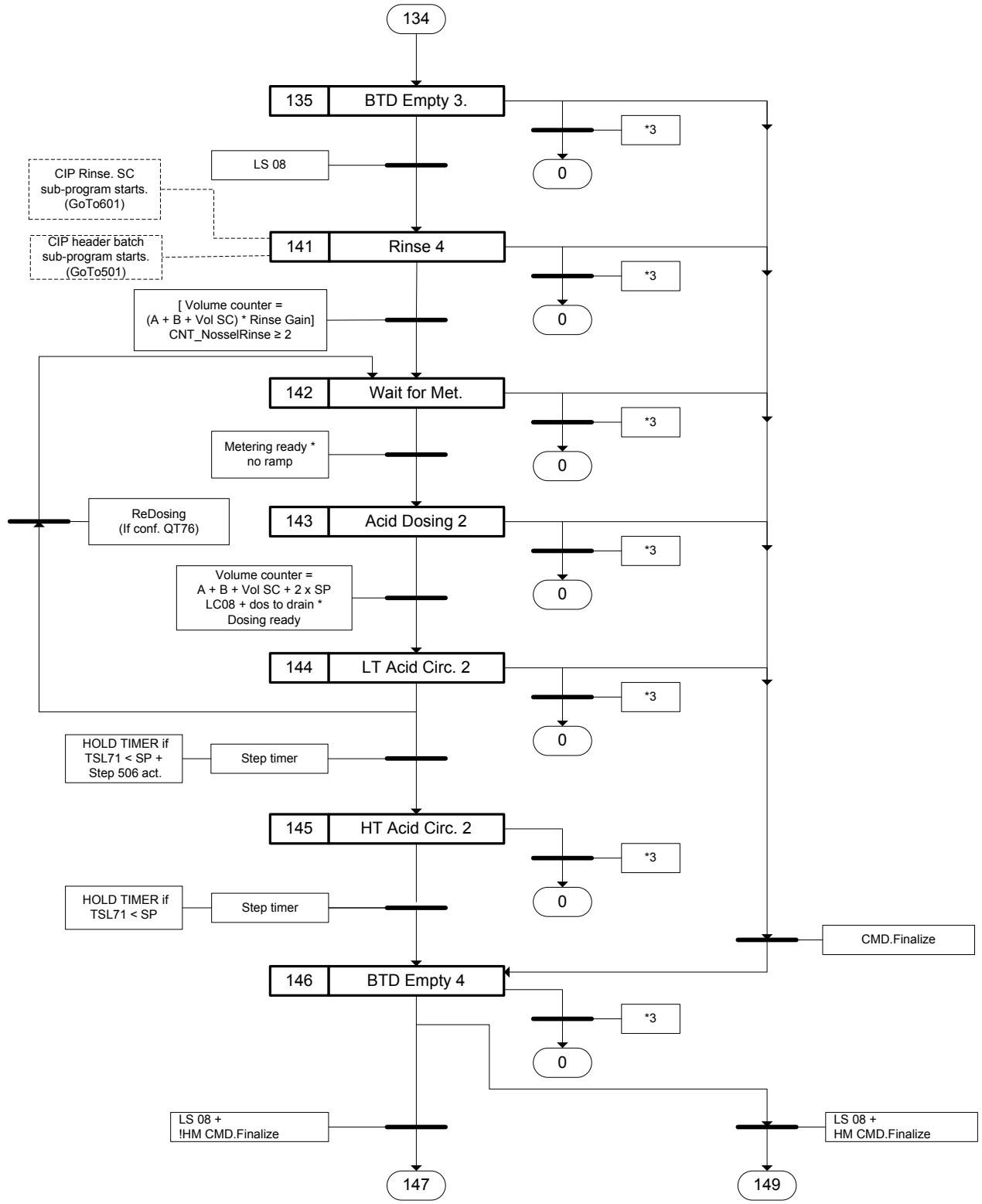

*3 = EM_Stop + Com_Power + FUSE FLT
+ CONF. US ver. * CONF Aseptic (Not ESL) * (Alsafe Diverted CIP AIC (alarm131)
+ CONF. US ver. * FDV FB Fault (alarm 130))

Rev.	Date/Sign.	Descrition

Tetra Therm Aseptic VTIS

VTIS CIP CCA P3

Doc.type: Sequence Diagram

Dept.	Drawn	Appr.	Date		Doc. No.
BU DBF	Jönsson Rickard	SV	2016-11-15		SD5844130774

Tetra Pak

Tetra Pak Dairy & Beverage

Order No.

124198860

This document and its content are our exclusive property and must not be copied, reproduced, transmitted or communicated to any other party or used for purposes not expressly permitted by us. Only to the extent expressly agreed by us this document may constitute a contractual obligation on our part.

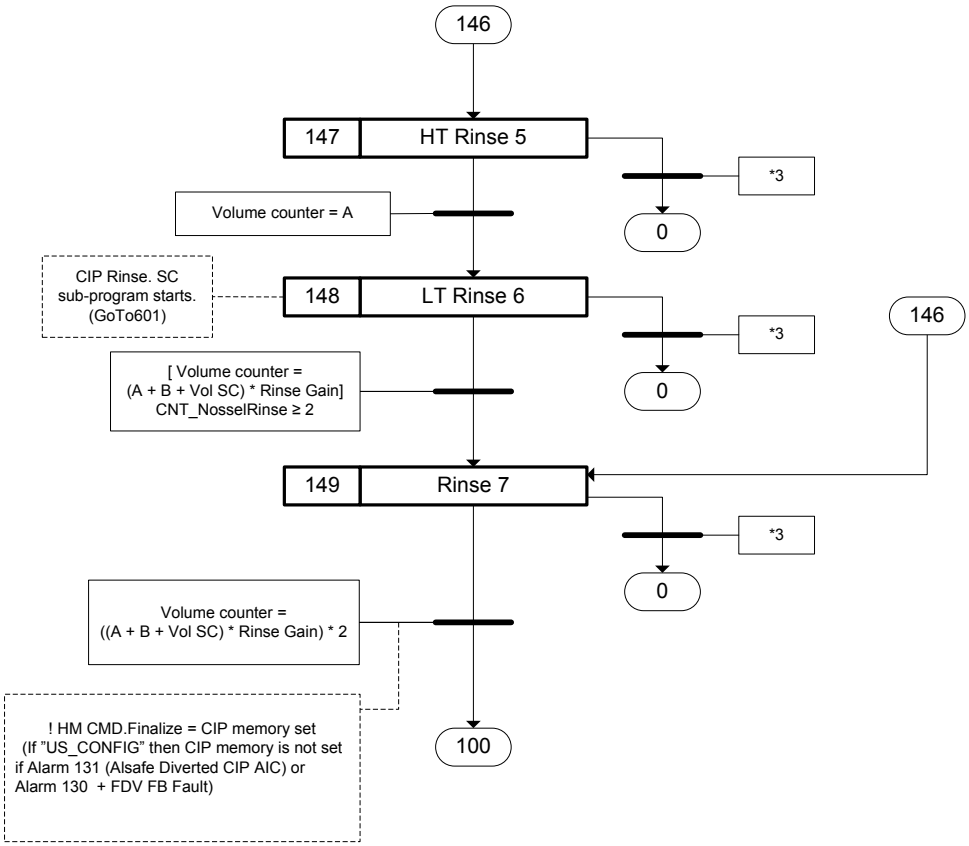

*3 = EM_Stop + Com_Power + FUSE FLT
+ CONF. US ver. * CONF Aseptic (Not ESL) * (Alsafe Diverted CIP AIC (alarm131)
+ CONF. US ver. * FDV FB Fault (alarm 130))

Rev.	Date/Sign.	Descrition

Tetra Therm Aseptic VTIS

VTIS CIP CCA P4

Doc.type: Sequence Diagram

Dept.	Drawn	Appr.	Date		Doc. No.
BU DBF	**Jönsson Rickard**	**SV**	**2016-11-15**		**SD5844130774**

Tetra Pak

Tetra Pak Dairy & Beverage

Order No.

124198860

This document and its content are our exclusive property and must not be copied, reproduced, transmitted or communicated to any other party or used for purposes not expressly permitted by us. Only to the extent expressly agreed by us this document may constitute a contractual obligation on our part.

CIP RINSE SPRAY CONDENSER
SEQUENCE

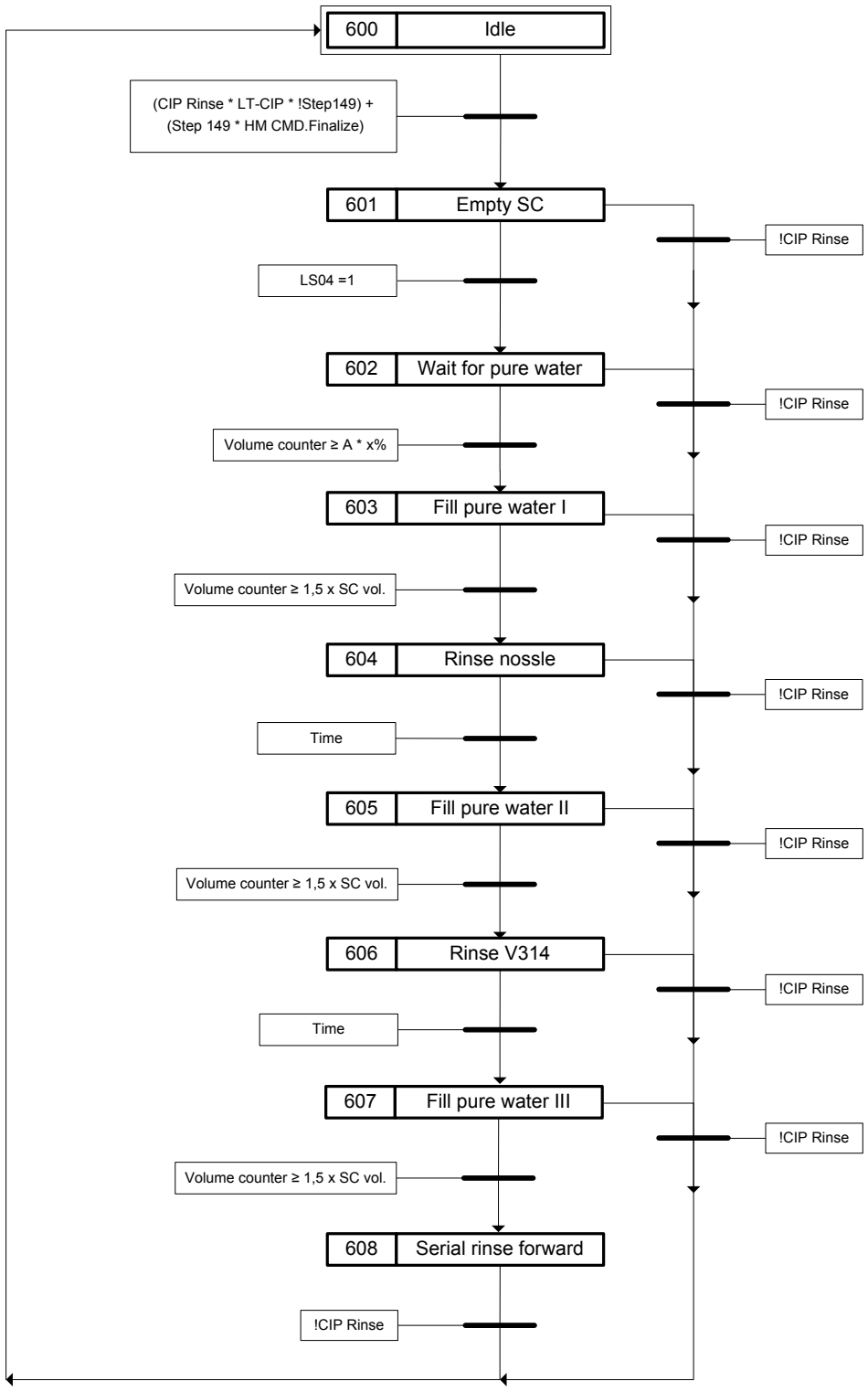

LS03 and LS04 are NC ➔LS04 =1 when no water in vessel

Rev.	Date/Sign.	Descrition

Tetra Therm Aseptic VTIS

RINSE SC

Doc.type: Sequence Diagram

Dept.	Drawn	Appr.	Date		Doc. No.
BU DBF	**Jönsson Rickard**	**SV**	**2016-11-15**		**SD5844130774**

Tetra Pak

Tetra Pak Dairy & Beverage

Order No.

124198860

This document and its content are our exclusive property and must not be copied, reproduced, transmitted or communicated to any other party or used for purposes not expressly permitted by us. Only to the extent expressly agreed by us this document may constitute a contractual obligation on our part.

PAC
Start sequence *

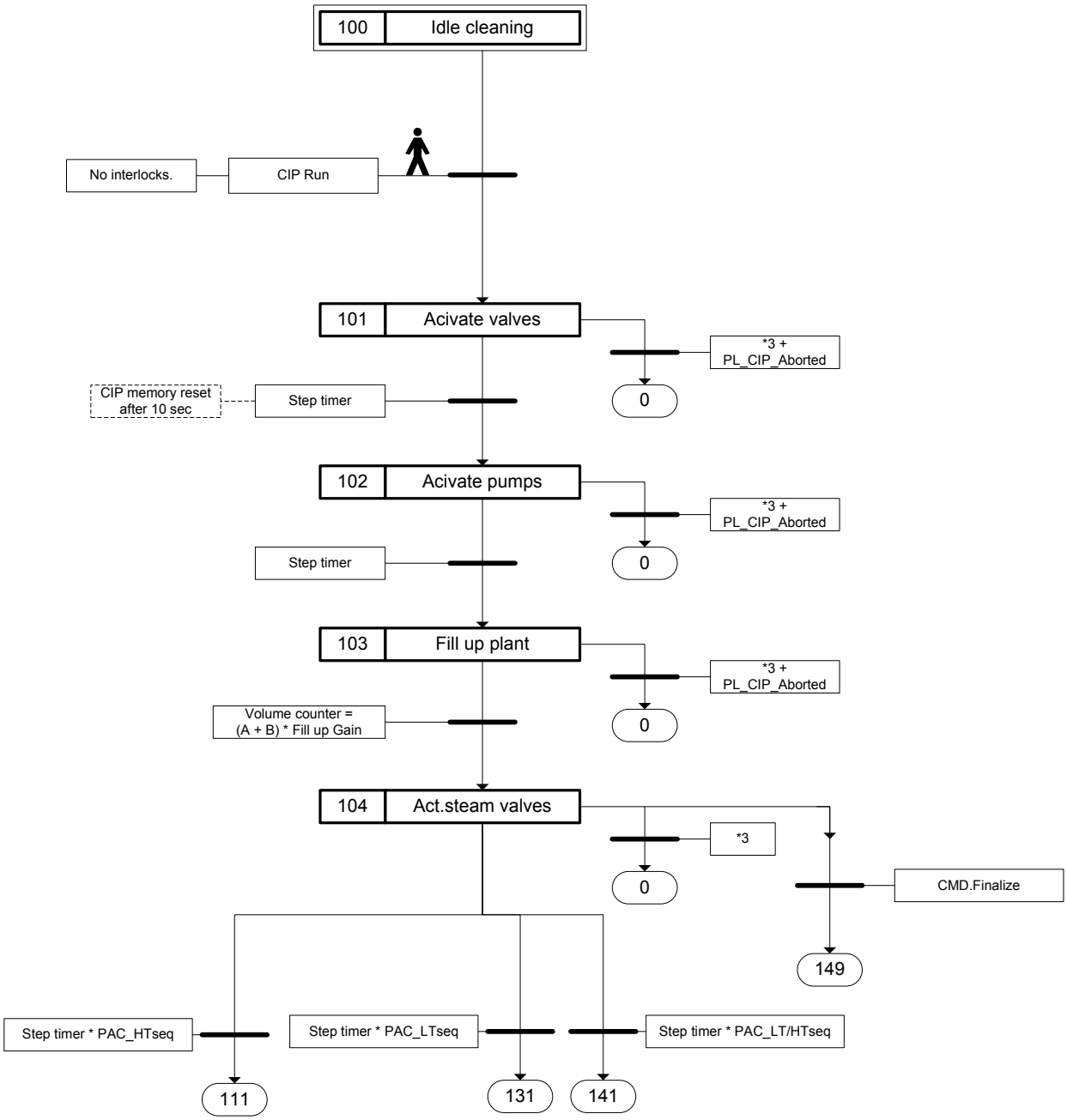

*3 = EM_Stop + Com_Power + FUSE FLT
+ CONF. US ver. * CONF Aseptic (Not ESL) * (Alsafe Diverted CIP AIC (alarm131)
+ CONF. US ver. * FDV FB Fault (alarm 130))

***Required parameters for sequence**:
Sequence order #
Circulation time [s]
Type of sequence (HT, LT, LT/HT)
Type of solution Lye / Acid
Concentration [%]

Rev.	Date/Sign.	Descrition

Tetra Therm Aseptic VTIS

PAC 1

Doc.type: Sequence Diagram

Dept.	Drawn	Appr.	Date		Doc. No.
BU DBF	**Jönsson Rickard**	**SV**	**2016-11-15**		**SD5844130774**

Tetra Pak
Tetra Pak Dairy & Beverage

Order No.
124198860

This document and its content are our exclusive property and must not be copied, reproduced, transmitted or communicated to any other party or used for purposes not expressly permitted by us. Only to the extent expressly agreed by us this document may constitute a contractual obligation on our part.

PAC
HT sequence *

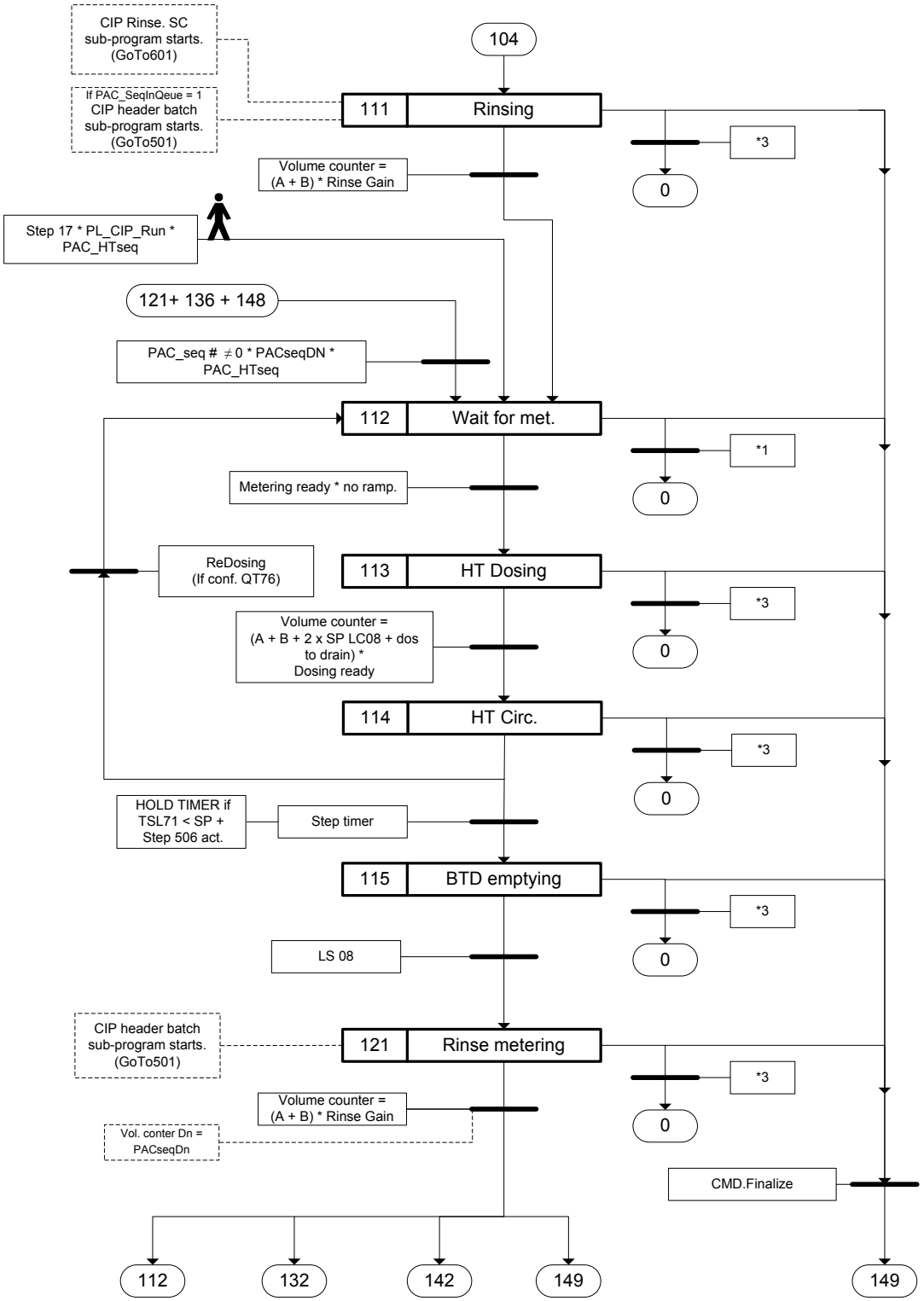

*3 = EM_Stop + Com_Power + FUSE FLT
+ CONF. US ver. * CONF Aseptic (Not ESL) * (Alsafe Diverted CIP AIC (alarm131)
+ CONF. US ver. * FDV FB Fault (alarm 130))

***Required parameters for sequence**:
Sequence order #
Circulation time [s]
Type of sequence (HT, LT, LT/HT)
Type of solution Lye / Acid
Concentration [%]

Rev.	Date/Sign.	Descrition

Tetra Therm Aseptic VTIS

PAC 2 HT Seq

Doc.type: Sequence Diagram

Dept.	Drawn	Appr.	Date		Doc. No.
BU DBF	**Jönsson Rickard**	**SV**	**2016-11-15**		**SD5844130774**

Tetra Pak
Tetra Pak Dairy & Beverage
Order No.
124198860

This document and its content are our exclusive property and must not be copied, reproduced, transmitted or communicated to any other party or used for purposes not expressly permitted by us. Only to the extent expressly agreed by us this document may constitute a contractual obligation on our part.

PAC
LT sequence *

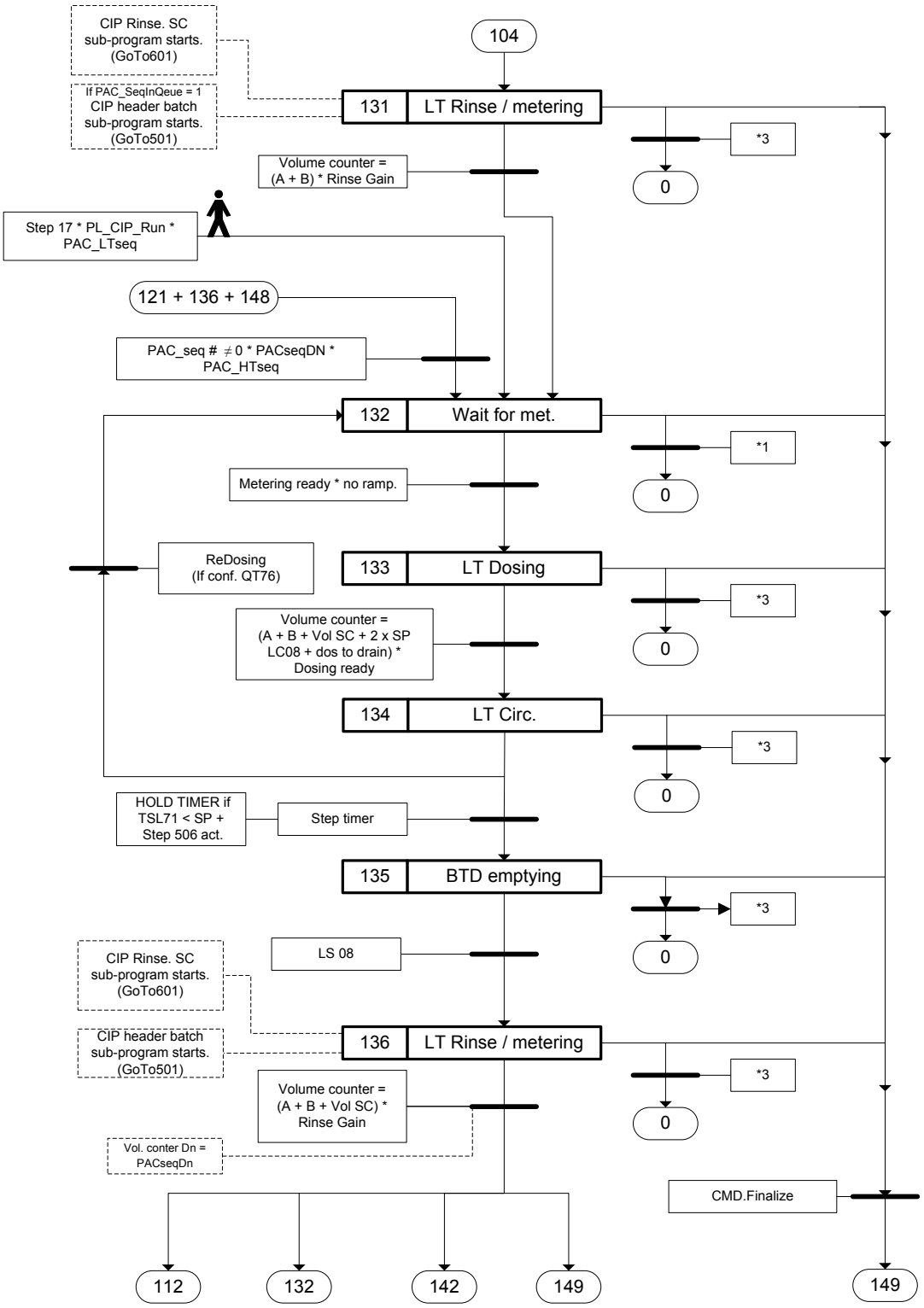

*3 = EM_Stop + Com_Power + FUSE FLT
+ CONF. US ver. * CONF Aseptic (Not ESL) * (Alsafe Diverted CIP AIC (alarm131)
+ CONF. US ver. * FDV FB Fault (alarm 130))

***Required parameters for sequence**:
Sequence order #
Circulation time [s]
Type of sequence (HT, LT, LT/HT)
Type of solution Lye / Acid
Concentration [%]

Rev.	Date/Sign.	Descrition

Tetra Therm Aseptic VTIS

PAC3 LT Seq

Doc.type: Sequence Diagram

Dept.	Drawn	Appr.	Date		Doc. No.
BU DBF	**Jönsson Rickard**	**SV**	**2016-11-15**		**SD5844130774**

Tetra Pak
Tetra Pak Dairy & Beverage

Order No.
124198860

This document and its content are our exclusive property and must not be copied, reproduced, transmitted or communicated to any other party or used for purposes not expressly permitted by us. Only to the extent expressly agreed by us this document may constitute a contractual obligation on our part.

PAC
LT/HT sequence *

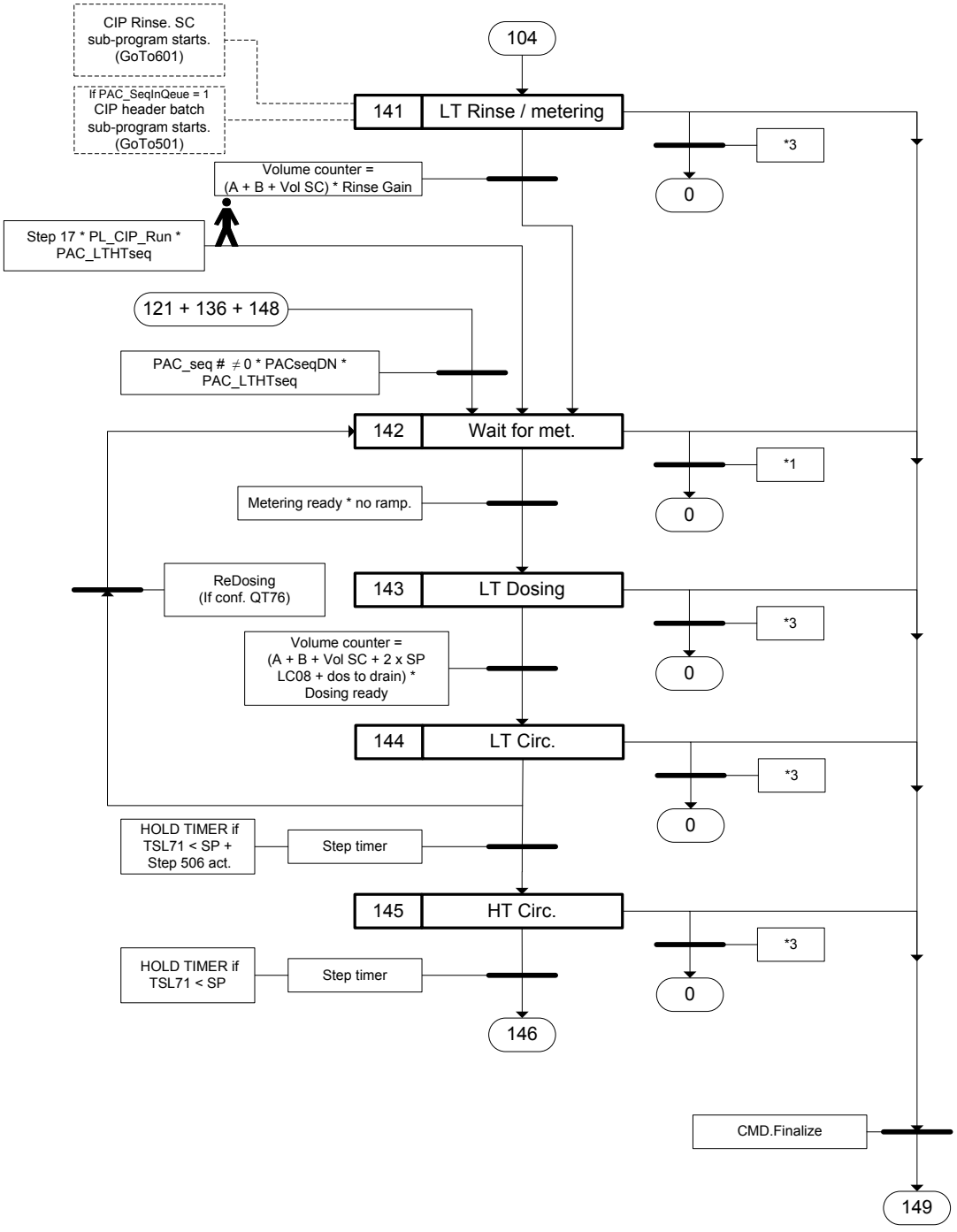

*3 = EM_Stop + Com_Power + FUSE FLT
+ CONF. US ver. * CONF Aseptic (Not ESL) * (Alsafe Diverted CIP AIC (alarm131)
+ CONF. US ver. * FDV FB Fault (alarm 130))

***Required parameters for sequence**:
Sequence order #
Circulation time [s]
Type of sequence (HT, LT, LT/HT)
Type of solution Lye / Acid
Concentration [%]

Rev.	Date/Sign.	Descrition

Tetra Therm Aseptic VTIS

PAC 4 LT / HT seq.

Doc.type: Sequence Diagram

Dept.	Drawn	Appr.	Date		Doc. No.
BU DBF	**Jönsson Rickard**	**SV**	**2016-11-15**		**SD5844130774**

Tetra Pak
Tetra Pak Dairy & Beverage

Order No.
124198860

This document and its content are our exclusive property and must not be copied, reproduced, transmitted or communicated to any other party or used for purposes not expressly permitted by us. Only to the extent expressly agreed by us this document may constitute a contractual obligation on our part.

PAC
LT/HT sequence *

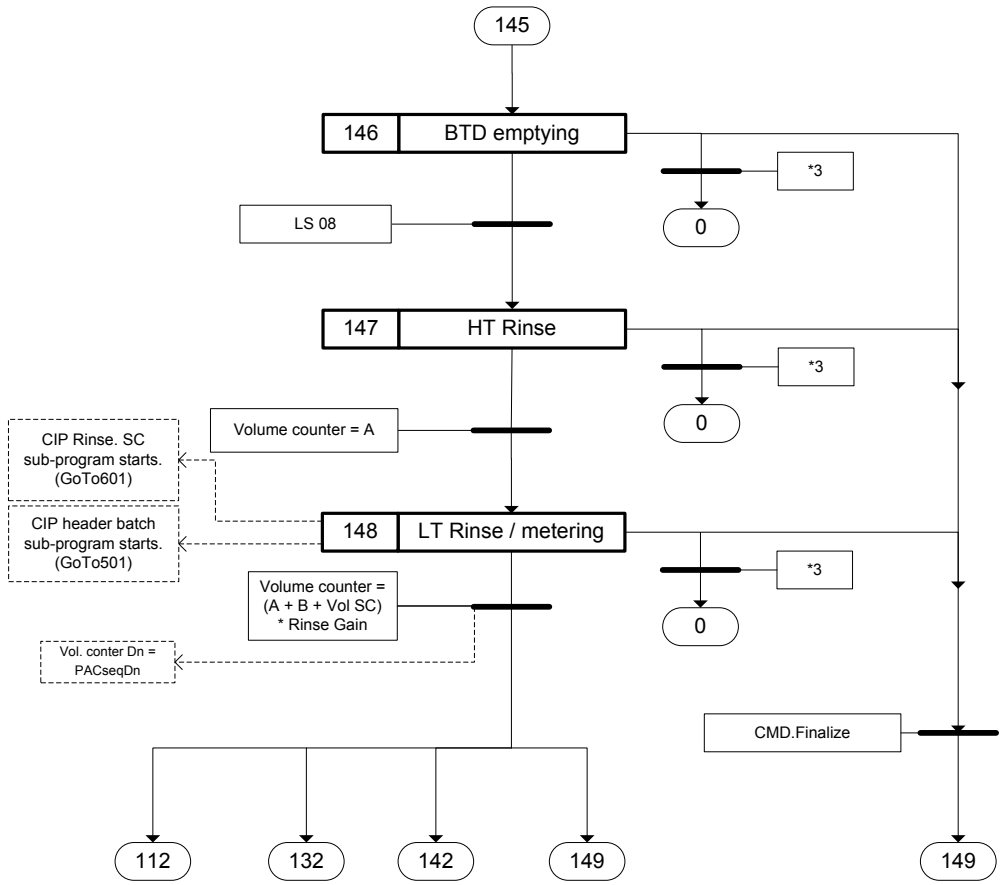

*3 = EM_Stop + Com_Power + FUSE FLT
+ CONF. US ver. * CONF Aseptic (Not ESL) * (Alsafe Diverted CIP AIC (alarm131)
+ CONF. US ver. * FDV FB Fault (alarm 130))

***Required parameters for sequence**:
Sequence order #
Circulation time [s]
Type of sequence (HT, LT, LT/HT)
Type of solution Lye / Acid
Concentration [%]

Rev.	Date/Sign.	Descrition

Tetra Therm Aseptic VTIS

PAC 5 LT/HT seq.

Doc.type: Sequence Diagram

Dept.	Drawn	Appr.	Date		Doc. No.
BU DBF	**Jönsson Rickard**	**SV**	**2016-11-15**		**SD5844130774**

Tetra Pak
Tetra Pak Dairy & Beverage

Order No.
124198860

This document and its content are our exclusive property and must not be copied, reproduced, transmitted or communicated to any other party or used for purposes not expressly permitted by us. Only to the extent expressly agreed by us this document may constitute a contractual obligation on our part.

Special CIP
Final rinse sequence *

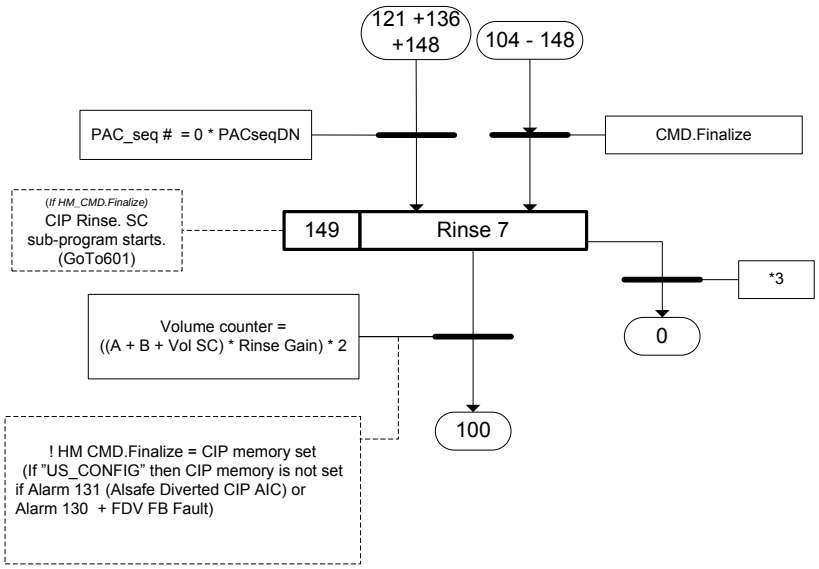

*3 = EM_Stop + Com_Power + FUSE FLT
+ CONF. US ver. * CONF Aseptic (Not ESL) * (Alsafe Diverted CIP AIC (alarm131)
+ CONF. US ver. * FDV FB Fault (alarm 130))

***Required parameters for sequence**:
Sequence order #
Circulation time [s]
Type of sequence (HT, LT, LT/HT)
Type of solution Lye / Acid
Concentration [%]

Rev.	Date/Sign.	Descrition

Tetra Therm Aseptic VTIS

PAC Rinse

Doc.type: Sequence Diagram

Dept.	Drawn	Appr.	Date		Doc. No.
BU DBF	**Jönsson Rickard**	**SV**	**2016-11-15**		**SD5844130774**

Tetra Pak
Tetra Pak Dairy & Beverage

Order No.
124198860

This document and its content are our exclusive property and must not be copied, reproduced, transmitted or communicated to any other party or used for purposes not expressly permitted by us. Only to the extent expressly agreed by us this document may constitute a contractual obligation on our part.

EU DECLARATION OF CONFORMITY

Identification: T58444130774

Name and address of the manufacturer:
Tetra Pak Dairy & Beverage Systems AB
Ruben Rausings Gata
SE-221 86 Lund
Sweden

This declaration is issued under the sole responsibility of the manufacturer.

Object of the declaration:
Tetra Therm® Aseptic VTIS

The object of the declaration described above is in conformity with the relevant Union harmonisation legislation:
2006/42/EC
2014/30/EU
2014/68/EU Conformity assessment procedure: B + F

References to relevant harmonised standards used or references to the other technical specifications in relation to which conformity is declared:

EN ISO 12100:2010
EN ISO 13857:2008
EN ISO 13850: 2008
EN 60204-1:2006+A1:2009
EN 1672-2: 2005+A1:2009
EN 61000-6-2:2005+AC:2005
EN 61000-6-4:2007+A1:2011
EN 13480 series
EN 13445 series
EN 287-1+A2
EN ISO 15614 series

Name, address and number of the notified body which carried out the conformity assessment:
Inspecta Sweden AB
Nordenskiöldsgatan 13
SE-201 21 Malmö
Sweden
Notified body number: 0409
Certificate number: B (16-1009102-103) + F

Additional information:
Person authorised to compile the technical file (2006/42/EC):
Manufacturer (see above)

The fulfilment of essential safety requirements set out in Annex I of Directive 2014/68/EU has been demonstrated.

Signed for and on behalf of the above named manufacturer:

Place and date of issue: Lund, Sweden
2016-10-31

Name, function: Dalida Bergman
Manager Operations Engineering

Signature: Dalida Bergman

TABULATION

Machine and type: Tetra Therm Aseptic VTIS

Serial number: T5844130773

Denomination	Article no.	Verification module	Remarks
Flash Vessel	6-32423 1573 1	H (III)	S-16, serial no. 160333
THE, HE01	2827571-0100	B + F	C85, serial no. 1163426
PHE, HE02	6-32871 0175 6	B + D	CB110
PHE, HE05	6-30360 0105 1	B + D	MS10, Serial no. 30109-16227
V347	90503-7704	B + D/D1	Leser 4414.4664
Homogeniser	2568800-0100	A	400
Steam filter F345	6-31801 9899 3	A1	VBA-193
Steam Separator SS353	90515-6394	B + D	S8
Piping	-	§4.3	-

Candia
116 Rue George Sand
42350 La Talaudière

Date 2016-11-09

Declaration of Compliance

"We confirm that the Tetra Therm Aseptic VTIS with serial number T5844130774, supplied by Tetra Pak, was at the time of delivery in compliance with relevant legislative demands;

- *Regulation (EC) No. 1935/2004 on materials and articles intended to come into contact with food* including underlying directives for specific materials and
- *Regulation (EU) No. 10/2011 on plastic materials and articles intended to come into contact with food* where applicable.

We also confirm compliance to

- *Regulation No. (EU) 2023/2006 on Good Manufacturing Practice on materials and articles intended to come into contact with food.*

We also confirm that for the purpose of this equipment, all spare parts and spare part kits of components intended for food contact currently delivered by Tetra Pak are in compliance with *Regulation (EC) No. 1935/2004* including underlying directives for specific materials and *Regulation (EU) No. 10/2011* where applicable."

Yours faithfully,

Davide Bergamo
- Manager Operations Engineering

Component Instructions

Document No.	Description	Section
Heat exchangers		1
1210229-0101	Brazed plate heat exchanger, CB	
1220922-0101	Plate Heat Exchanger, Tetra Plex C / Tetra Plex M / Tetra Plex T	
1223855-0101	Tubular Heat Exchanger, Tetra Spiraflo® C	
Pumps		2
1214246-0101	Centrifugal pump, LKH 5 - 90 / LKHSP 10 - 40	
1229146-0101	Vacuum pump, LEMA/LEMB with IE2 Motors	
Valves		3
1212676-0101	Air vent valve, Spirotop	
1212764-0101	Air vent valve, MST 21/21H	
1214498-0101	Constant-pressure modulating valve, CPM-2	
1215611-0101	Expansion valve, APC	
1215850-0101	Butterfly valve, LKB	
1216355-0101	Non-return valve, RK86/RK86A	
1218030-0101	On/off valve, 2000 / 2001 / 2002 / 2012	
1220118-0101	Safety valve, 433/441/442	
1221121-0101	Unique Single Seat Valve, Standard, SSV Stop valves	
1221122-0101	Unique Single Seat Valve, Standard, SSV Change-over Valves	
1221124-0101	Unique Single Seat Valve, Reverse acting, SSV Change-over Valves	
1221586-0101	Flow restrictor, REG	
1221734-0101	Reducing Valve, DR20	
1221736-0101	Indication unit, IndiTop	
1222444-0101	Unique Single Seat Valve, Aseptic, SSV Stop valves	
1222462-0101	Unique Single Seat Valve, Aseptic, SSV Change-over Valves	
1223553-0101	Back pressure valve, Diaphragm Tri Clamp	
1224238-0101	Ball valve, PS4/PZ4	
1224311-0101	Non-return valve, P750	
1224794-0101	Regulating Valve, 3241	
1224795-0101	Regulating Valve, 3244	
1224796-0101	Regulating Valve, 3321/3372-I/P	
1224799-0101	Regulating Valve, 3347 Barstock	
1224800-0101	Regulating Valve, 3323	
1226927-0101	Regulating valve, 8802	

TocTemplateComponents_01.pdf

Component Instructions

Document No.	Description	Section
1241004-0101	Regulating valve	
1241266-0101	Constant-pressure modulating valve, CPM-I-D60	
1241273-0101	Non-return valve, LKC-2	
3280255-0101	Top Control Head, 8695	
3282610-0101	Angle Seat Valve, 2000 INOX	
Sensors and transmitters		4
1212430-0101	Pressure gauge	
1218198-0101	Pressure switch, Ceraphant T PTP31/PTP35	
1218415-0101	Flow transmitter, Promag 10/50/53/55	
1219131-0101	Pressure transmitter, FMD 78	
1224261-0101	Level sensor	
1229086-0101	Pressure transmitter, PMC51, PMP51, PMP55	
1229491-0101	Flow Indicator, H250/RR/M40	
1241250-0101	Proximity switch, IF7020, IG5594, IG5596, II5846	
1241312-0101	Level transmitter, Type EVK	
3283723-0101	Level Switch, FTL33	
3283902-0101	Temperature Transmitter, TPT12	
3283946-0101	Conductivity Meter, Smartec CLD 18	
Tanks and vessels		5
1213378-0101	Balance tank, BTD-200	
1226601-0101	Flash Vessel, Type S	
3281944-0101	CIP Header Batch Tank, CIP HB version	
Other process components		6
1211779-0101	Steam trap, FT14-10/14	
1214605-0101	Steam separator	
1215497-0101	Particle steam filter, VBA housing	
1216067-0101	Steam barrier	
1224084-0101	E/P Regulator, ITV1050/ ITV2050	
1225994-0101	Steam trap, FT43	
1228796-0101	Control Panel, CCP T / CCP TA	
1241073-0101	Strainer, DN 25-50/DN 65-100	
1241164-0101	Air regulator	
1241195-0101	Steam injector	
1241301-0101	Strainer, LKVF	
1248349-0101	Vacuum breaker	
1248674-0101	Strainer	
3281785-0101	Trolley, Goldy 100/70 TP	

TocTemplateComponents_01.pdf

Component Instructions

Document No.	Description	Section
3283771-0101	Pressure Regulator, AC30	
3284690-0101	Safety Signs	

TocTemplateComponents_01.pdf

Maintenance & Spare Parts

Brazed plate heat exchanger

(Alfa Laval)

CB

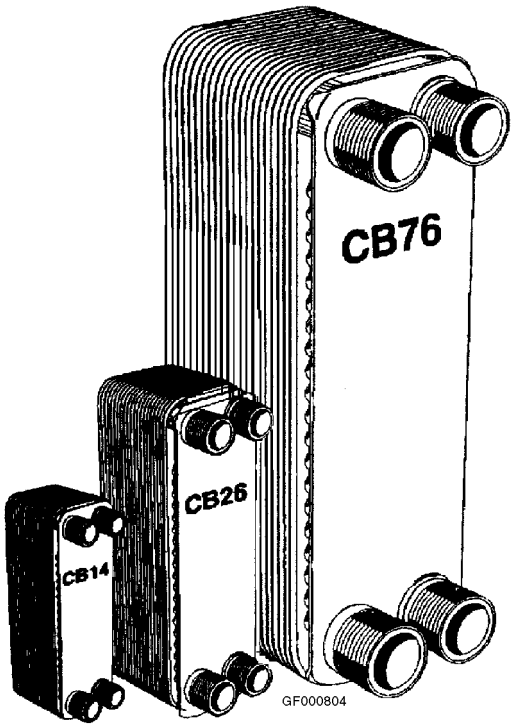

2.21210229-0101.fro

Tetra Pak

Doc No. 1210229-0101

Brazed plate heat exchanger

This document refers to components specified in Technical Manual, Maintenance & Spare Parts CD/DVD or on Tetra Pak Intranet.

2.21210229-0101.fro

Version 02

Doc No. 1210229-0101

Tetra Pak

Tetra Pak Processing Systems AB

Maintenance 1

Brazed plate heat exchanger 1

General 1

Cleaning the heat exchanger 2

Spare Parts 3

Not applicable for this component! 3

1.0 1210229-0101.TOC

This page intentionally left blank

Maintenance

Brazed plate heat exchanger

General

The brazed heat exchanger (BHE) concept is a variation of the traditional plate heat exchanger. Instead of having gaskets between the plates, the plates have been brazed together.

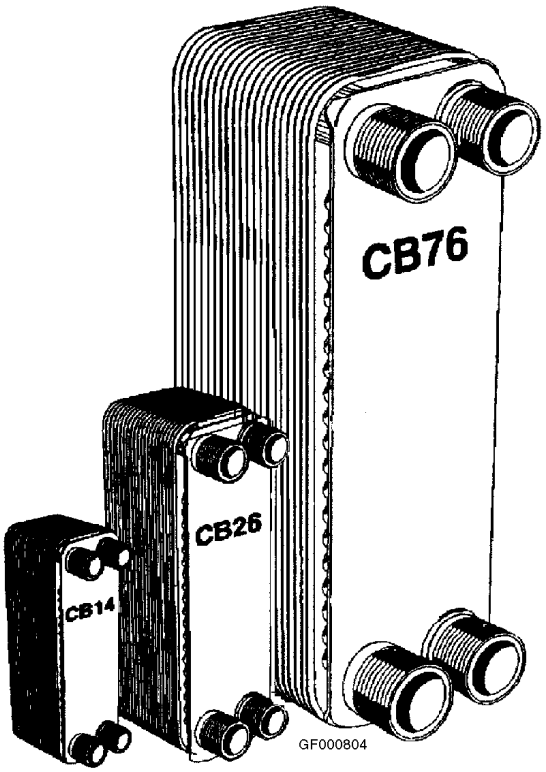

2.2TF000654.EN

Cleaning the heat exchanger

Risk of injury!
Never service the heat exchanger when it is hot!
The heat exchanger and the pipelines must **never** be pressurised when servicing the heat exchanger!
Always use protective gloves and protective eye-wear when handling the cleaning detergent.

If the channels are blocked with lime, it might be impossible to clean them. In that case, replace the unit with a new one.

Note! Never use liquids that are corrosive to copper or stainless steel (AlfaPhos, article number 6-31801-2612-5, is recommended as cleaning detergent).
It is important that the unit is not left on stand-by after cleaning.

a) Drain the heat exchanger.
b) Rinse with fresh water.
c) Drain the rinse water.
d) Fill with diluted AlfaPhos (1 part in 9 parts of water) at 50-70°C (122-158°F).
e) If possible, circulate the solution.
f) Drain the solution.
g) Rinse with fresh water until pH is neutral.

Drain the fresh water.

2.2TF000654.EN

Spare Parts

Not applicable for this component!

2.2TF000880.en

Tetra Pak

Maintenance & Spare Parts

Plate Heat Exchanger

(Tetra Pak)

Tetra Plex C / Tetra Plex M / Tetra Plex T

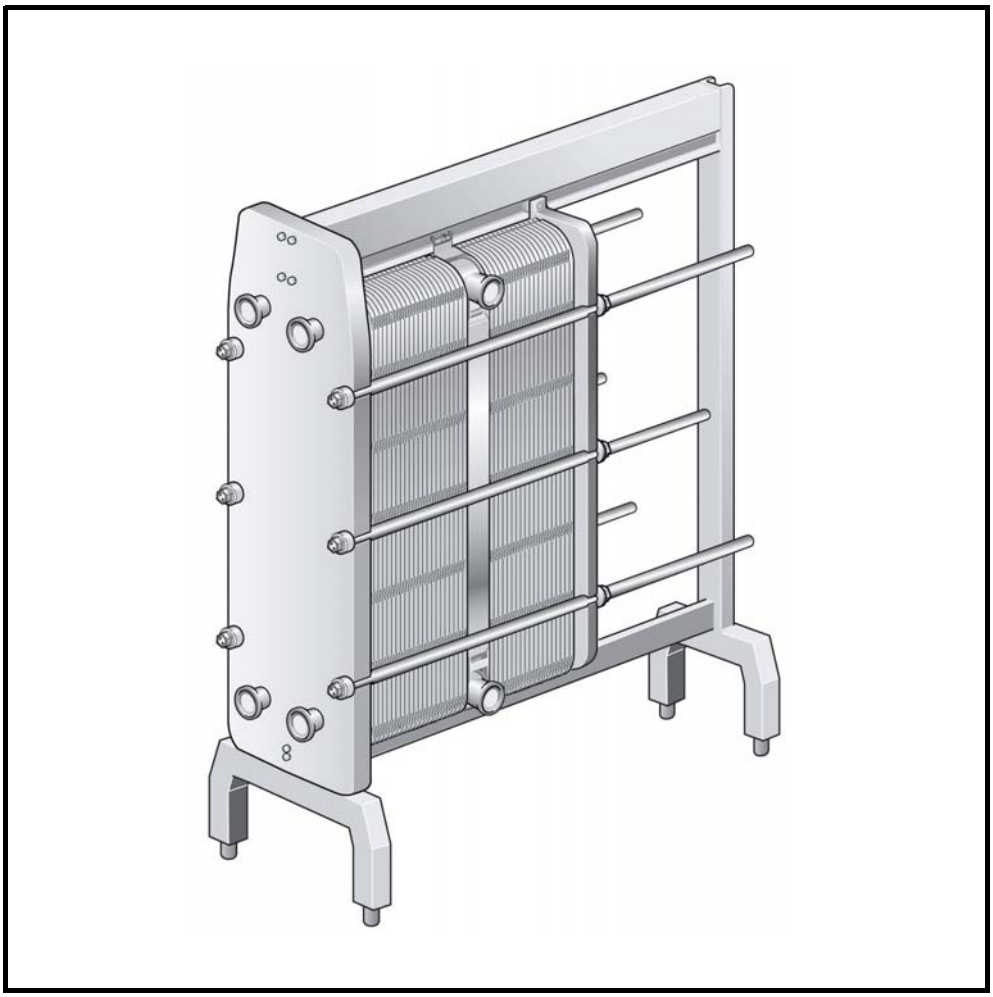

1.0 1220922-0101.fro

Tetra Pak

Doc No. 1220922-0101

Plate Heat Exchanger

Tetra Plex C / Tetra Plex M / Tetra Plex T

This document refers to components specified in Technical Manual, on Maintenance & Spare Parts CD/DVD or on Tetra Pak Intranet.

1.0 1220922-0101.fro

Version 02 Issue 2008-08

Doc No. 1220922-0101

Tetra Pak

Tetra Pak Processing Systems AB

Table of contents

General 1

Function description 1

Maintenance 2

General guidelines regarding maintenance 2

Opening and closing 4

Regasketing 11

Cleaning 12

Cleaning and sterilization - Product side. 12

Cleaning - Non-product side 15

Troubleshooting 16

Spare parts 17

1.0 1220922-0101.TOC

This page intentionally left blank

General

Function description

The plate heat exchanger is typically used for heating or cooling food or other products with low to medium viscosity. In the plate heat exchanger heat is transferred from one medium to another through thin metal plates, which have been pressed into a very special pattern. Because of the gasket arrangement on the plates, and the placing of “A” and “B” plates alternately, the two liquids enter alternate passages. The warmer medium drops in temperature, while the colder medium will increase its temperature.

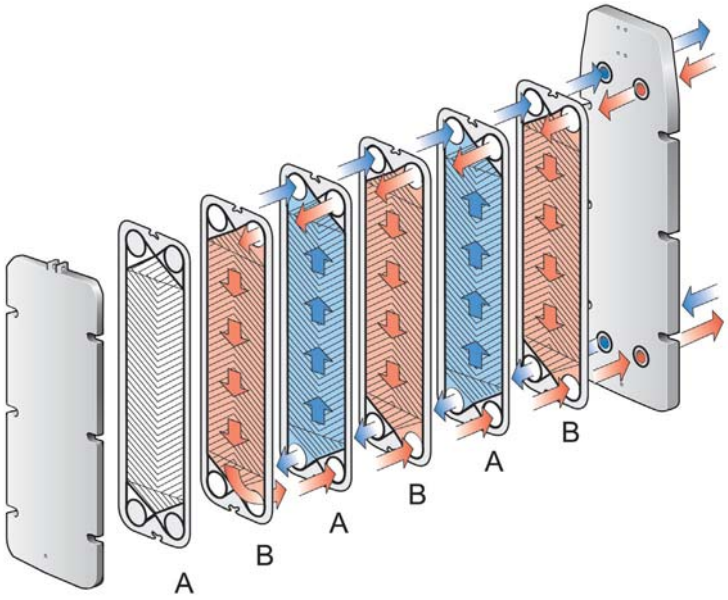

2.2tf5049O5.en

Maintenance

General guidelines regarding maintenance

Note! Please pay attention to and follow the information below while maintaining your Tetra Plex plate heat exchanger.

Plate Sheet material

Even stainless steel can corrode. Chlorine ions are hazardous.

Avoid cooling brines containing chlorine salts such as NaCI and CaCI2, which is the most harmful.

Inspect the plates regularly, for possible corrosion attacks, especially on a new installation and after changing the running conditions.

Gasket rubber

The storeroom for spare gaskets should be cool and dark. Gaskets must not be stored hanging or twisted or subject to great load.

Stainless steel surfaces

The stainless steel surfaces of the frame plate, the pressure plate and connection plates are glass blasted.

Clean with cloth wetted by paraffin oil. Do not degrease the surface!

Lubrication

Lubricate the bolt threads of the tightening bolts with an EP (extreme pressure) grease, for example Gleitmo 800 or equivalent.

Grease the suspension wheels on the pressure plate and the connection plates.

Connection plates – Dismantling

Most connection plates have corners, which easily can be exchanged or relocated. At normal service and maintenance the connection plates need to be touched only if the plate heat exchanger is rearranged for new duties. In such cases contact your supplier for advice on how to rebuild your plate heat exchanger.

(Cont'd)

2.2tf5049O5.en

(Cont'd)

Pressure plate – Dismounting

At rebuilding it may be necessary to remove the pressure plate. In such cases contact your supplier for advice on how to rebuild your plate heat exchanger.

Pressure test after maintenance

Before start-up of production, whenever plates or gaskets have been removed, inserted or exchanged, it is strongly recommended to perform a pressure test to confirm the internal and external tightness of the PHE. At this test, one media side at a time must be tested with the other media side open to the atmosphere. This also applies for the upside and the downside of a regenerative section.

The pressure testing shall be performed at a pressure equal to the operating pressure of the actual unit but never above the design pressure as stated on the name plate.

Please consult the local office/representative of the supplier for advice on pressure testing procedure.

2.2tf5049O5.en

Opening and closing

WARNING!

Risk of injury!
To avoid hand injuries owing to sharp edges, protective gloves should always be worn when handling plates and protective sheets.

Risk of injury!
If the heat exchanger is hot, wait until it has cooled down to about 40 °C (100 °F).

Risk of injury!
Liquid under pressure! Always use protective goggles and hard hat when handling the unit.

The tightening bolts have one lock washer and one guide washer each. The lock washer is placed under the nut and locks the nut. The guide washer is under the bolt head. With the nut locked it is possible to operate the bolts from the frame plate side with either pneumatic or manual spanners. Larger plate heat exchangers have a bearing box instead of a guide washer to facilitate opening and closing of the unit.

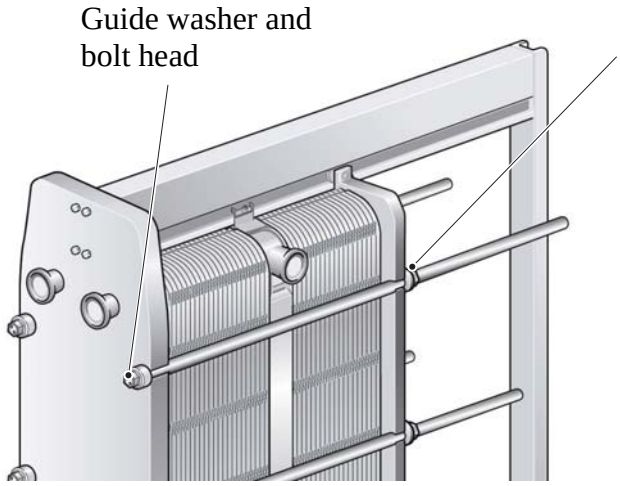

2.2tf5049O5.en

If needed the washers can be reversed with the lock washer under the bolt head and the guide washer under the nut, but then the plate heat exchanger needs to be opened with a manual spanner from the pressure plate side.

Opening

a) Shut down the heat exchanger.

b) Close the valves and isolate the heat exchanger from the rest of the system.

(Cont'd)

(Cont'd)

c) Drain the plate heat exchanger.

d) Remove the protective sheets, if any.

e) Dismantle pipes from the pressure plate and the connection plate(s) so that the pressure plate and the connection plate(s) are free to move along the carrying bar.

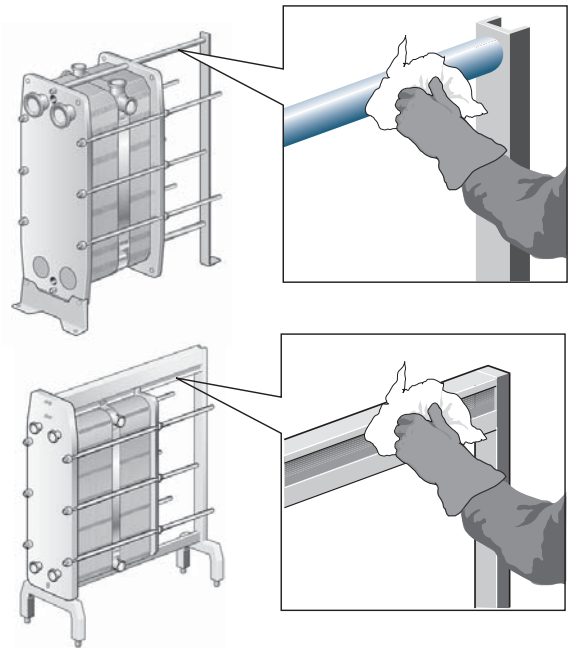

f) Inspect the sliding surfaces of the carrying bar and wipe clean.

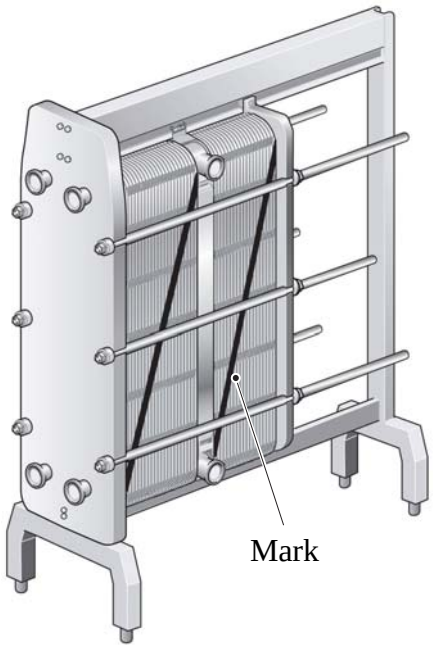

g) Mark the plate assembly on the outside by a diagonal line.

(Cont'd)

2.2tf5049O5.en

(Cont'd)

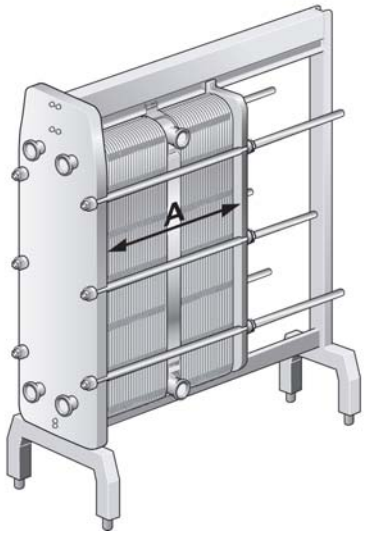

h) Measure and note the dimension A.

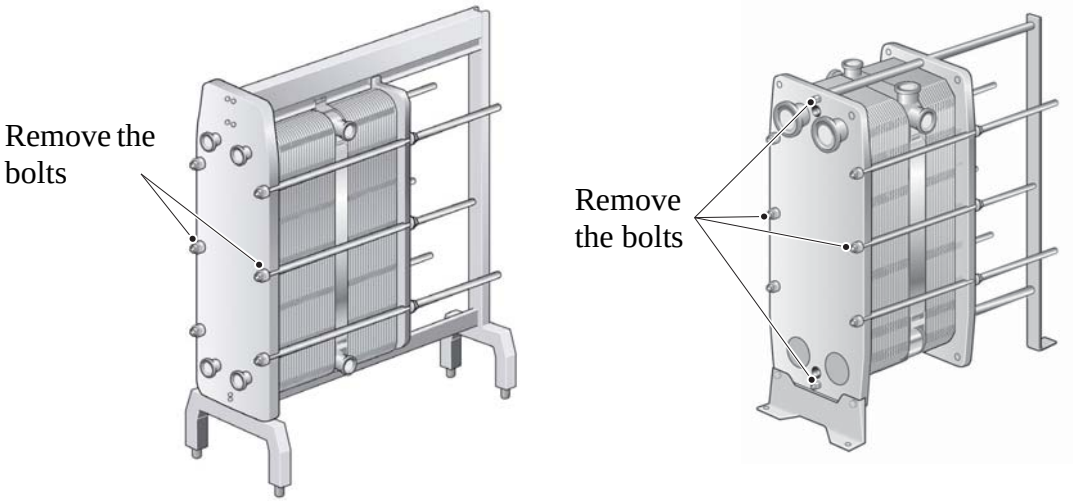

2.2tf5049O5.en

i) Loosen and remove the bolts as shown in the figures above.

j) Use the remaining four bolts to open the heat exchanger. On the larger heat exchangers these bolts are equipped with bearing boxes.

k) Pairs of bolts are opened alternately and diagonally in two steps, see figures below.

Step	Bolt No.	To dimension
1	1-2-3-4	1.05 A
2	1-2 or 3-4	Opening

Be careful so that the frame plate and pressure plate are always in parallel. Skewing of the pressure plate during opening must not exceed 10 mm (2 turns per bolt) across the width and 25 mm (5 turns per bolt) vertically.

(Cont'd)

(Cont'd)

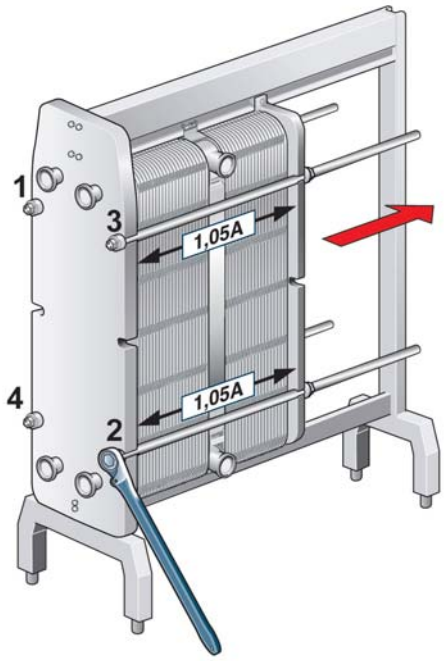

l) Step 1: Loosen the four bolts alternately and diagonally until the plate package measures 1.05A.

2.2tf5504905.en

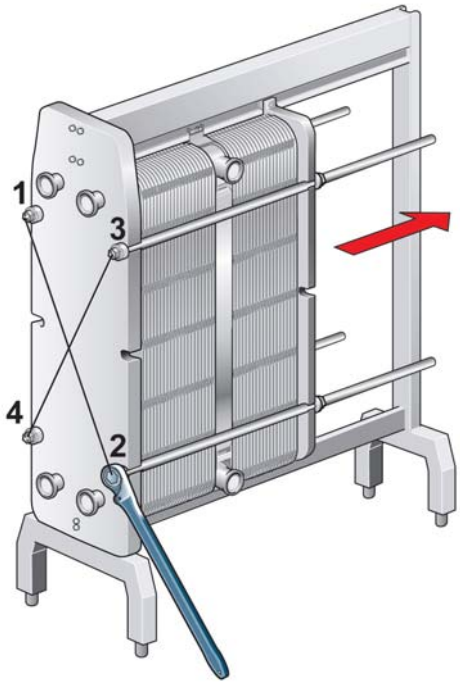

m) Step 2: Two diagonal bolts are loosened alternately, as shown in the figure above.

(Cont'd)

(Cont'd)

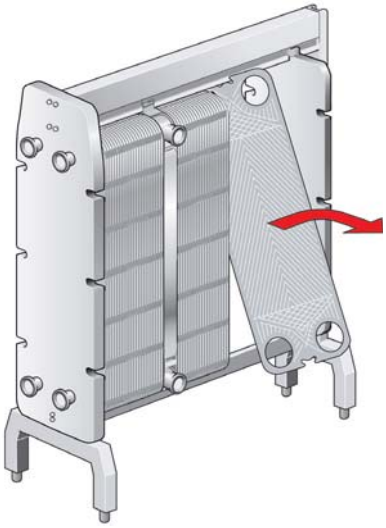

n) Open the plate pack by letting the pressure plate glide on the carrying bar. If plates are to be numbered, do this before removing the plates. Plates do not need to be removed if cleaning is done using only water, i.e. without cleaning agent.

Closing

If the plates have been taken out, insert A- and B-plates alternately, and with the gaskets turned towards the pressure plate or the frame plate depending on type of plate heat exchanger. On opening the PHE, check that all gaskets are clean, in good condition and correctly positioned in the grooves of plates and connections.

a) Check that all gaskets are correctly positioned in the grooves and that the sealing surfaces are clean. Even slight product remains or foreign particles may cause leakage. If a PHE is opened without previously having been efficiently cleaned by circulation, it is necessary to brush the plates manually and to rinse them with a waterhose.

b) Brush the threads of the bolts clean, using a steel wire brush. Lubricate the threads with a thin layer of grease, e.g. Gleitmo 800 or equivalent.

c) Check that all gaskets are properly attached to the plates.

Note! If the gasket is wrongly positioned, it will show by the fact that it rises out of the gasket groove or that it is positioned outside the groove.

(Cont'd)

2.2tf504905.en

(Cont'd)

d) Press the plate assembly together. Tightening is done in two steps, see figures below. Be careful so that the frame plate and the pressure plate are always in parallel.

Step	Bolt No.	To dimension
1	1-2 or 3-4	1.10 A
2	1-2-3-4	A

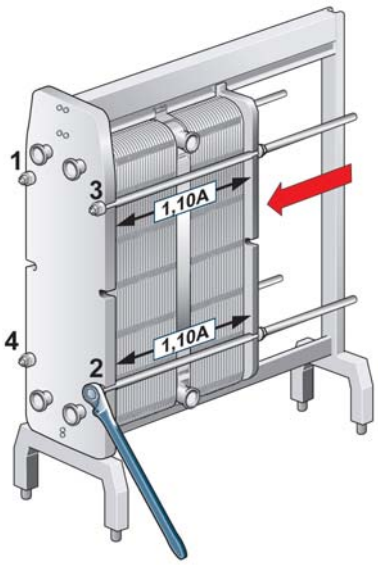

2.2tf5049O5.en

e) Step 1: Tighten the two diagonal bolts alternately until the plate package measures 1.10A.

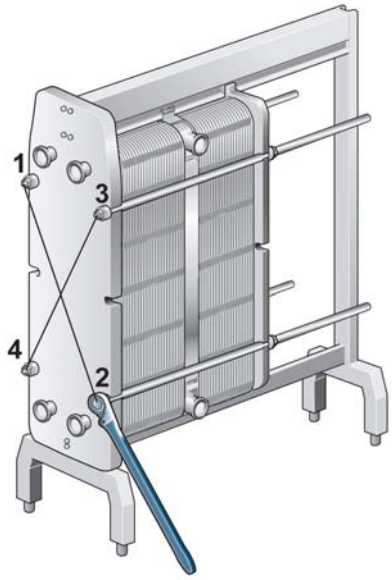

f) Step 2: After that, bolts are tightened alternately and diagonally, as shown in the figure below. Check the dimension A during tightening at the positions of the bolts that are being used.

(Cont'd)

(Cont'd)

g) If the plate pack has been marked on the outside, check this (see step “g” in section “Opening”.

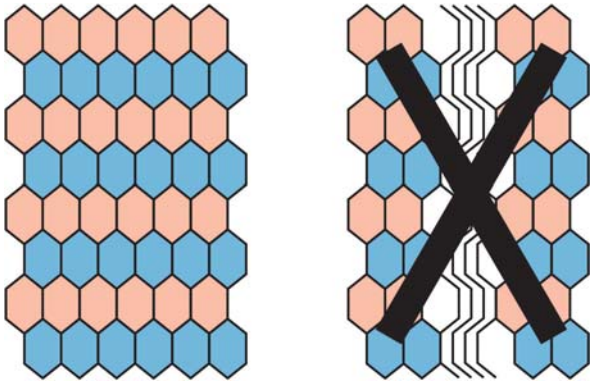

If the plates are correctly assembled (A/B/A/B etc.), the edges form a “honeycomb” pattern, see picture above.

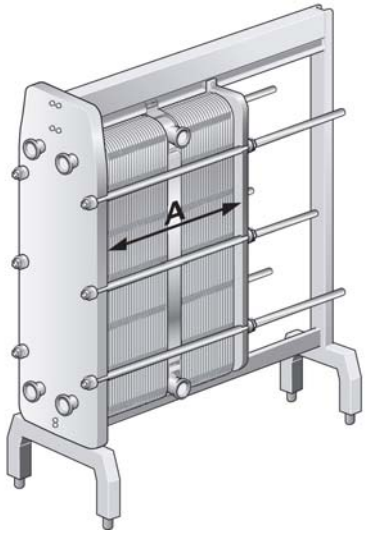

2.2tf5049O5.en

h) Mount remaining bolts and check measurement A on both sides, at top and bottom.

i) Mount protection sheets (if provided).

j) Connect pipes.

k) If the PHE does not seal when the measure A has been reached, it can be tightened further to A minus 0.5 %.

Regasketing

Clip-on gaskets

a) Open the plate heat exchanger according to previous section.

b) Remove the old gasket with the plate still hanging in the frame.

c) Attach the clip-on gasket to the plate. Slip the gasket prongs under the edge of the plate.

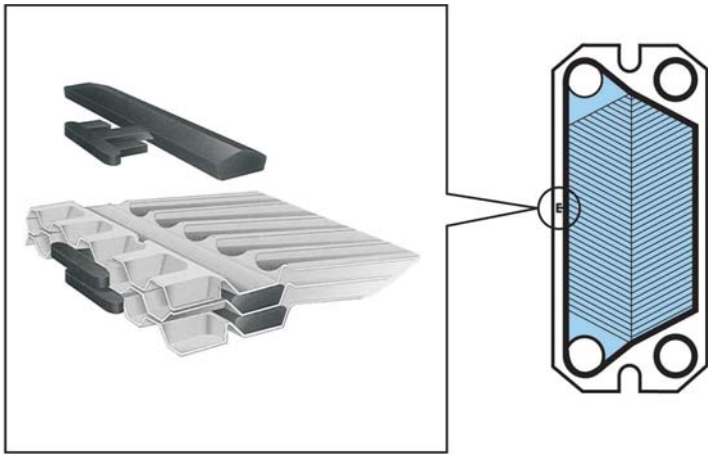

Note! Make sure the two gasket prongs are in correct position.

d) Be careful to check that the plates are hanging in correct order.

e) Close the plate heat exchanger according to previous section.

f) Perform a pressure test, see section “General guidelines”.

2.2tf5049O5.en

Glued gaskets

Separate gluing instructions will be delivered together with the glue.

Cleaning

Cleaning and sterilization - Product side

WARNING!

Risk of injury!
Sodium hydroxide and nitric acid can cause serious injuries to skin and mucous membranes. Handle with great care! Always use protective goggles and protect your hands with rubber gloves.

General

Immediately after a production cycle, the product side is normally cleaned by circulation of acid and/or lye, Cleaning-In-Place (CIP).
Sterilization is performed immediately before starting the next production cycle.

Cleaning

The CIP flow rate should always be at least the same as the production flow rate. Increased flow rate may be required in some cases, e.g. milk sterilisation and processing of viscous liquids or liquids containing particles.

2.2tf5049O5.en

Generic cleaning agents	Instructions
Lye solution	1 % by weight sodium hydroxide (NaOH) at max. 80 °C. Dissolve 1 kg of NaOH in 100 litres of water or mix 2.2 litres of 33 % NaOH solution in 100 litres of water.
Acid solution	0.5 % by weight nitric acid (HNO3) at max. 70 °C. Mix 0.7 litres of 53 % (36Be) HNO3 in 100 litres of water.

Detergents containing wetting and complex-formed agents may also be used in addition to the caustic soda or nitric acid.

The maximum NaOH and HNO3 concentrations by weight must be respected.

Water of more than 300 ppm Cl ions may not be used for preparation of cleaning solutions.

(Cont'd)

(Cont'd)

Note! After the first test run with product, the plate heat exchanger should be cleaned following a cleaning program applicable to the product in question, see chapter Cleaning below. The plate heat exchanger should then be opened, see section “Opening”, and the plate surfaces carefully inspected. The cleaning result should be checked at regular intervals.

Method	Instructions
By heat	Circulate water of 90 °C until all parts of the system have been kept at the required temperature for at least ten minutes.
Chemically by hypochlorite	Before introducing the hypochlorite solution, make sure that the equipment is clean, has cooled down and is free from deposits and that no acid residues are left. Gradually dose 100 cm3 of hypochlorite solution, containing max. 150 g/l active chlorine to 100 l of circulation water at a max. temperature of 20 °C. Treat for five minutes, up to maximum 15 minutes. Rinse well after sterilization.

2.2tf5049O5.en

(Cont'd)

(Cont'd)

Typical cleaning programs

Consult your supplier of cleaning chemicals for advice on suitable cleaning programmes.

Products rich in protein			Products poor in protein			
Coolers		Pasteurizers and other heaters	High content of insoluble components, e.g. nectar and tomato juice		Low content of insoluble components, e.g. beer and wine	
Daily	**Weekly**.	**Daily**	**Daily**	**Weekly**	**Daily****	**Weekly**
– Rinsing 5 min.	– Rinsing 5 min.	– Rinsing 5 min.	– Rinsing 10 min.	– Rinsing 10 min.	– Rinsing 5 min.	– Rinsing 5 min.
– Lye 20 min.	– Acid 15 min.	– Acid 15 min.	– Lye 30 min.	– Lye 30 min.	– Lye 15 min.	– Lye 15 min.
– Rinsing 10 min.	– Rinsing 5 min.	– Rinsing 5 min.	– Rinsing 10 min.	– Rinsing 5 min.*	– Rinsing 10 min.	– Rinsing 5 min.*
– Stop	– Lye 20 min.	– Lye 20 min.	– Stop	– Acid 15 min.*	– Stop	– Acid 15 min.*
– Sterilization 10 min.	– Rinsing 10 min.	– Rinsing 5 min.*	– Sterilization 10 min.	– Rinsing 10 min.	– Sterilization 10 min.	– Rinsing 10 min.
	– Stop	– Acid 15 min.*		– Stop		– Stop
	– Sterilization	– Rinsing 10 min.		– Sterilization 10 min.		– Sterilization 10 min.
		– Stop				

2.2tf5049O5.en

* The need for an additional acid cycle in order to remove calcium carbonate scaling depends on the product. In many cases it is possible to carry out cleaning at considerably longer intervals. Sometimes it is possible to eliminate acid cleaning altogether.

** In some cases, where the risk for growth of micro-organisms is low, it is possible to eliminate daily cleaning and replace it by the following procedure:
Rinsing 20 min – Stop – Sterilization 20 min.

Cleaning - Non-product side

Cleaning of deposits from cooling medium or heating medium

Solid deposits can be removed by opening the heat exchanger and cleaning the plates with a soft brush and 10 % nitric acid.

Note! Be careful to follow these instructions:

- Rinse well!
- Under no circumstances should hydrochloric acid be used with:

  - stainless steel plates

  - titanium plates.

- Water of more than 300 ppm Cl ions may not be used for preparation of cleaning solutions.
- Hydrofluoric acid should never be used with titanium plates.

Chlorine as a growth inhibitor

Chlorine, commonly used as growth inhibitor in cooling water systems, reduces the corrosion resistance of stainless steels (including high alloys like 20/18/6).

Chlorine weakens the protection layer of these steels making them more susceptible to corrosion attacks than they would otherwise be. It is a matter of time of exposure and concentration.

In every case where chlorination of non-titanium equipment cannot be avoided, your local representative must be consulted.

Note! Titanium is not affected by chlorine.

2.2tf5040905.en

Troubleshooting

Fault	Correction
Performance of the PHE with regard to heat transfer and/or pressure drop is abnormal	Check the platage. A consequence of wrongly located plates can be that some channels are bypassed, creating dead area. Stagnation will follow, making circulation cleaning impossible and creating immediate risk of corrosion and/ or product contamination.
Leakage to the outside	Check A-measure. If the leakage continues, mark the leaking plates, open and replace the gaskets in question.
Liquids mixing, inside leakage	Apply water pressure on one side of all the sections in the unit. Fill the other side with water and then open all connections on that side. If a plate is perforated, water will pour out on one side of the corresponding open connections. The plates of the faulty section are then examined by means of current crevice-detection liquids. A large plate section may be divided and the pressure test repeated in order to reduce the number of plates on which the crevice-detector has to be applied.

2.2tf5049O5.en

Spare parts

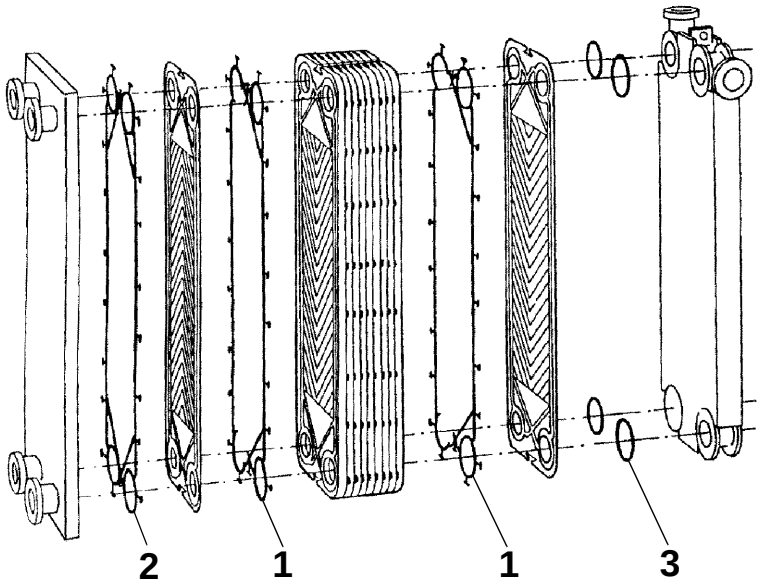

C3

Spare part article No.	Description	Pos	Qty
6-32235-2109-6	End plate gasket II, NBRP, Clip-on	2	1
End plate gasket II above could also be made of two Channel plate gaskets:			
6-32235-2104-6	Channel plate gasket: End plate gasket I, NBRP, Clip-on	1	1
6-1629584-01	Connection gasket, NBRP	3	1
6-1629584-02	Connection gasket, EPDMF	3	1
6-1629584-03	Connection gasket, NBRHTF	3	1

C6

Spare part article No.	Description	Pos	Qty
6-39005609-26	End plate gasket II, EPDMFF, Clip-on	2	1
6-39005609-27	End plate gasket II, NBRFF, Clip-on	2	1
End plate gasket II above could also be made of 2 pieces of Channel plate gasket:			
6-39005608-26	Channel plate gasket: End plate gasket I, EPDMFF, Clip-on	1	1
6-39005608-27	Channel plate gasket: End plate gasket I, NBRFF, Clip-on	1	1
6-34505262-02	Connection gasket, EPDMFF	3	1
6-34505262-01	Connection gasket, NBRFF	3	1

(Cont'd)

1.0 tf504906.en

(Cont'd)

C8

Spare part article No.	Description	Pos	Qty
6-39005611-26	End plate gasket II, EPDMFF, Clip-on	2	1
6-39005611-27	End plate gasket II, NBRFF, Clip-on	2	1
End plate gasket II above could also be made of 2 pieces of Channel plate gasket:			
6-39005610-26	Channel plate gasket: End plate gasket I, EPDMFF, Clip-on	1	1
6-39005610-27	Channel plate gasket: End plate gasket I, NBRFF, Clip-on	1	1
6-34505263-02	Connection gasket, EPDMFF	3	1
6-34505263-01	Connection gasket, NBRFF	3	1

C10

Spare part article No.	Description	Pos	Qty
6-39005613-26	End plate gasket II, EPDMFF, Clip-on	2	1
6-39005613-27	End plate gasket II, NBRFF, Clip-on	2	1
End plate gasket II above could also be made of 2 pieces of Channel plate gasket:			
6-39005612-26	Channel plate gasket: End plate gasket I, EPDMFF, Clip-on	1	1
6-39005612-27	Channel plate gasket: End plate gasket I, NBRFF, Clip-on	1	1
6-34505264-02	Connection gasket, EPDMFF	3	1
6-34505264-01	Connection gasket, NBRFF	3	1

1.0 tf504906.en

C15

Spare part article No.	Description	Pos	Qty
6-39005472-26	End plate gasket II, EPDMFF, Clip-on Consists of 2 Channel plate gaskets	2	2
6-39005472-27	End plate gasket II, NBRFF, Clip-on Consists of 2 Channel plate gaskets	2	2
6-39005472-26	Channel plate gasket: End plate gasket I, EPDMFF, Clip-on	1	1
6-39005472-27	Channel plate gasket: End plate gasket I, NBRFF, Clip-on	1	1
6-34504969-02	Connection gasket, EPDMFF	3	1
6-34504968-01	Connection gasket, NBRFF	3	1

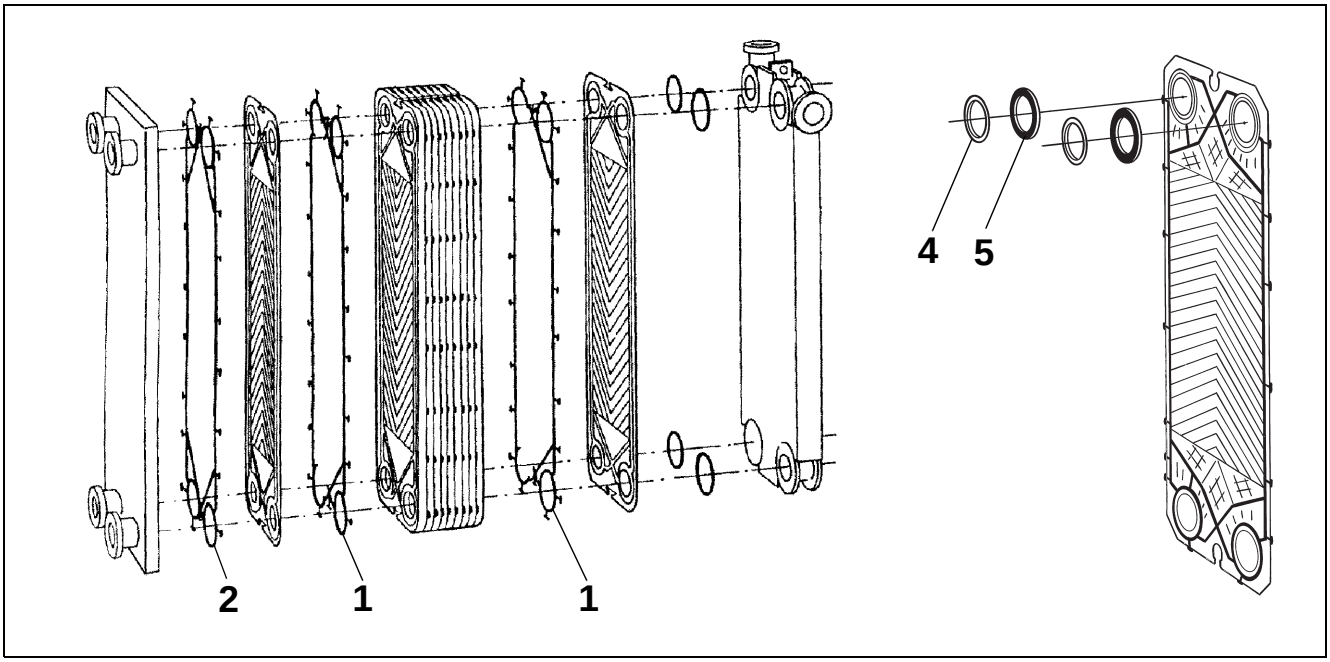

MS3

Spare part article No.	Description	Pos	Qty
6-32263-0952-8	End plate gasket II, EPDMF, Clip-on Consists of 2 Channel plate gaskets	2	2
6-32263-0954-6	End plate gasket II, NBRP, Clip-on Consists of 2 Channel plate gaskets	2	2
6-32263-0952-8	Channel plate gasket: End plate gasket I, EPDMF, Clip-on	1	1
6-32263-0954-6	Channel plate gasket: End plate gasket I, NBRP, Clip-on	1	1
6-32263-0982-8	Connection gasket for pressure plate, EPDMF, Flat	3	1
6-32263-0984-6	Connection gasket for pressure plate, NBRP, Flat	3	1

MS6

Spare part article No.	Description	Pos	Qty
6-39005614-26	End plate gasket II, EPDMFF, Clip-on Consists of 2 Channel plate gaskets	2	2
6-39005614-27	End plate gasket II, NBRFF, Clip-on Consists of 2 Channel plate gaskets	2	2
6-39005614-26	Channel plate gasket: End plate gasket I, EPDMFF, Clip-on	1	1
6-39005614-27	Channel plate gasket: End plate gasket I, NBRFF, Clip-on	1	1
6-32330-1424-6	End plate gasket II for transition plate, NBRP	2	1
6-39005615-26	Ring gasket for transition plate, EPDMFF	5	4
6-39005615-27	Ring gasket for transition plate, NBRFF	5	4

1.0 tf504906.en

Spare part article No.	Description	Pos	Qty
6-32330-8535-1	Collars for transition plate, Stainless steel	4	4
6-32330-8535-2	Collars for transition plate, Titanium	4	4
6-32330-8535-3	Collars for transition plate, Hast.C	4	4
6-32330-8535-4	Collars for transition plate, SMO	4	4

MN6

Spare part article No.	Description	Pos	Qty
6-32330-1404-6	End plate gasket II, NBRP, Clip-on Consists of 2 Channel plate gaskets	2	2
6-32330-1404-6	Channel plate gasket: End plate gasket I, NBRP, Clip-on	1	1
6-32330-6369-6	Ring gaskets for transition plate, NBRP	5	4
6-32324-7482-1	Collars for transition plate, Stainless steel	4	4
6-32324-7482-2	Collars for transition plate, Titanium	4	4
6-32330-1404-6	Channel plate gaskets for transition plate, 2 pieces, NBRP	1	2

MS10

Spare part article No.	Description	Pos	Qty
6-39005616-26	End plate gasket II, EPDMFF, Clip-on Peak Consists of 2 Channel plate gaskets	2	2
6-39005616-27	End plate gasket II, NBRFF, Clip-on Peak Consists of 2 Channel plate gaskets	2	2
6-39005616-26	Channel plate gasket: End plate gasket I, EPDMFF, Clip-on Peak	1	1
6-39005616-27	Channel plate gasket: End plate gasket I, NBRFF, Clip-on Peak	1	1
6-39005617-26	Ring gaskets for transition plate, EPDMFF	5	4
6-39005617-27	Ring gaskets for transition plate, NBRFF	5	4
6-32324-7367-1	Collars for transition plate, Stainless steel	4	4
6-32324-7367-2	Collars for transition plate, Titanium	4	4
6-32324-7367-4	Collars for transition plate, Hast.C	4	4
6-32324-7367-5	Collars for transition plate, SMO	4	4
6-32330-1509-6	Channel plate gaskets for transition plate, 2 pieces, NBRP, Clip-on Peak	1	2

(Cont'd)

1.0 tf504906.en

(Cont'd)

MN10

Spare part article No.	Description	Pos	Qty
6-32330-1652-8	End plate gasket II, EPDMF, Clip-on Rib Consists of 2 Channel plate gaskets	2	2
6-32330-1653-1	End plate gasket II, NBRHTF, Clip-on Rib Consists of 2 Channel plate gaskets	2	2
6-32330-1654-6	End plate gasket II, NBRP, Clip-on Rib Consists of 2 Channel plate gaskets	2	2
6-32330-1652-8	Channel plate gasket: End plate gasket I, EPDMF, Clip-on Rib	1	1
6-32330-1653-1	Channel plate gasket: End plate gasket I, NBRHTF, Clip-on Rib	1	1
6-32330-1654-6	Channel plate gasket: End plate gasket I, NBRP, Clip-on Rib	1	1
6-32330-6514-6	Ring gaskets for transition plate, NBRP	5	4
6-32324-7367-1	Collars for transition plate, Stainless steel	4	4
6-32324-7367-2	Collars for transition plate, Titanium	4	4
6-32324-7367-4	Collars for transition plate, Hast.C	4	4
6-32324-7367-5	Collars for transition plate, SMO	4	4
6-32330-1654-6	Channel plate gaskets for transition plate, 2 pieces, NBRP, Clip-on Rib	1	2

1.0 tf504906.en

MN11

Spare part article No.	Description	Pos	Qty
6-39004874-26	End plate gasket II, EPDMFF, Clip-on Consists of 2 Channel plate gaskets	2	2
6-39004874-27	End plate gasket II, NBRFF, Clip-on Consists of 2 Channel plate gaskets	2	2
6-39004874-26	Channel plate gasket End plate gasket I, EPDMFF, Clip-on	1	1
6-39004874-27	Channel plate gasket End plate gasket I, NBRFF, Clip-on	1	1
6-39004876-26	Ring gaskets for transition plate, EPDMFF	5	4
6-39004876-27	Ring gaskets for transition plate, NBRFF	5	4
6-39004932-01	Collars for transition plate, Stainless steel	4	4
6-39004872-07	Channel plate gaskets for transition plate, 2 pieces, NBRB, Clip-on	1	2

(Cont'd)

(Cont'd)

MS15

Spare part article No.	Description	Pos	Qty
6-32330-1802-8	End plate gasket II, EPDM, Clip-on Consists of 2 Channel plate gaskets	2	2
6-32330-1804-6	End plate gasket II, NBRP, Clip-on Consists of 2 Channel plate gaskets	2	2
6-32330-1802-8	Channel plate gasket: End plate gasket I, EPDM, Clip-on	1	1
6-32330-1804-6	Channel plate gasket: End plate gasket I, NBRP, Clip-on	1	1
6-32330-1807-8	Ring gaskets for transition plate, EPDMF	5	4
6-32330-1809-6	Ring gaskets for transition plate, NBRP	5	4
6-32330-8450-1	Collars for transition plate, Stainless steel	4	4
6-32330-8450-2	Collars for transition plate, Titanium	4	4
6-32330-8450-3	Collars for transition plate, SMO	4	4
6-32330-1804-6	Channel plate gaskets for transition plate, 2 pieces, NBRP, Clip-on	1	2

MN15

Spare part article No.	Description	Pos	Qty
6-32330-1817-8	End plate gasket II, EPDMF, Clip-on Consists of 2 Channel plate gaskets	2	2
6-32330-1819-6	End plate gasket II, NBRP, Clip-on Consists of 2 Channel plate gaskets	2	2
6-32330-1817-8	Channel plate gasket: End plate gasket I, EPDMF, Clip-on	1	1
6-32330-1819-6	Channel plate gasket: End plate gasket I, NBRP, Clip-on	1	1
6-32330-1822-8	Ring gaskets for transition plate, EPDMF	5	4
6-32330-1824-6	Ring gaskets for transition plate, NBRP	5	4
6-32330-8462-1	Collars for transition plate, Stainless steel	4	4
6-32330-8462-2	Collars for transition plate, Titanium	4	4
6-32330-8462-3	Collars for transition plate, Hast.C	4	4
6-32330-8462-5	Collars for transition plate, SMO	4	4
6-32330-1819-6	Channel plate gaskets for transition plate, 2 pieces, NBRP, Clip-on	1	2

1.0 tf504906.en

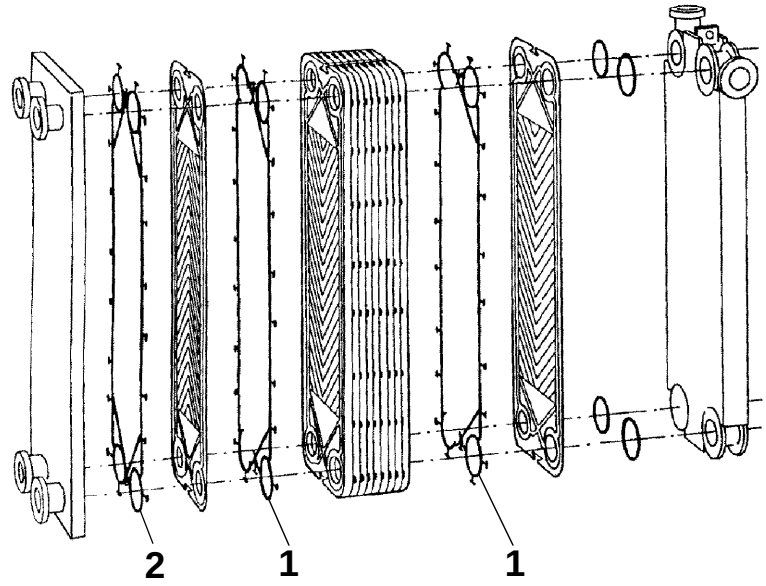

T6

Spare part article No.	Description	Pos	Qty
6-32330-2932-8	End plate gasket II, EPDMF, Clip-on Consists of 2 Channel plate gaskets	2	2
6-32330-2934-6	End plate gasket II, NBRP, Clip-on Consists of 2 Channel plate gaskets	2	2
6-32330-2933-7	End plate gasket II, HeatSealF™ (FKMT), Clip-on Consists of 2 Channel plate gaskets	2	2
6-32330-2932-8	Channel plate gasket: End plate gasket I, EPDMF, Clip-on	1	1
6-32330-2934-6	Channel plate gasket: End plate gasket I, NBRP, Clip-on	1	1
6-32330-2933-7	Channel plate gasket: End plate gasket I, HeatSealF™ (FKMT), Clip-on	1	1

1.0 tf504906.en

Tetra Pak

Maintenance & Spare Parts

Tubular Heat Exchanger

(Tetra Pak)

Tetra Spiraflo® C



1.0 1223855-0101.fro

Tetra Pak

Doc No. 1223855-0101

Tubular Heat Exchanger

Tetra Spiraflo® C

This document refers to components specified in Technical Manual, Maintenance & Spare Parts CD/DVD or on Tetra Pak Intranet.

1.0 1223855-0101.fro

Version 09 Issue 2014-11

Doc No. 1223855-0101

Tetra Pak

Tetra Pak Processing Systems AB

Function Description 1
Tetra Spiraflo C except CMR, CMRF and CC 1
Tetra Spiraflo CMR and CMRF 1
Configuration 3
Maintenance 4
General 4
Maintenance Stop 4
Maintenance Intervals 4
Torque Table 4
Check and Replace Procedure, Tetra Spiraflo C except CMRF and CC 5
Check and Replace Procedure, Tetra Spiraflo CMRF 12
Check and Replace Procedure, Tetra Spiraflo CC70 23
Check and Replace Procedure, Tetra Spiraflo CC108 28
Pressure Test 37
Cleaning 39
Cleaning - External 39
Cleaning - CIP 42
Spare Parts 47
Tetra Spiraflo C 47
Tetra Spiraflo C25/C29/C38 58
Tetra Spiraflo CC70 60
Tetra Spiraflo CC108 62
Tetra Spiraflo CMRF 64
Holding tube 66
Holding tube connections 66
Extended spanner for holding tube 66
Grease 66

1.0 1223855-0101.TOC

This page intentionally left blank

Function Description

The function of the heat exchanger is cooling down or heating up product with the help of a medium.

WARNING!

Risk of injury!
The intended use of this equipment is for food products and cleaning liquids. All other use is prohibited.

Tetra Spiraflo C except CMR, CMRF and CC

The figure below shows a heat exchanger that is cooling down the product.

The hot product enters the heat exchanger [3] and exits the heat exchanger [4].

The cooling medium enters the heat exchanger [2] and exits the heat exchanger [1].

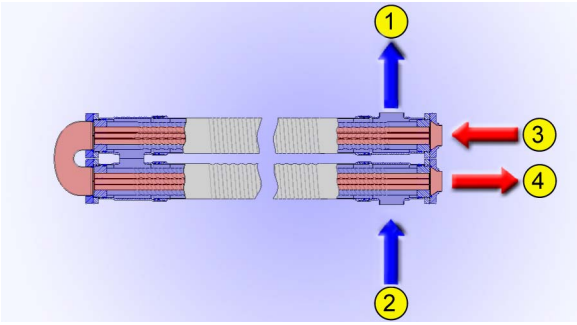

2.2tf506214.en

Tetra Spiraflo CMR and CMRF

Tetra Spiraflo CMR and CMRF are product-to-product heat recovery tubes. For these tubes the product is used as heating or cooling medium.

The figure below shows a heat exchanger that is cooling down the product with the product as the cooling medium.

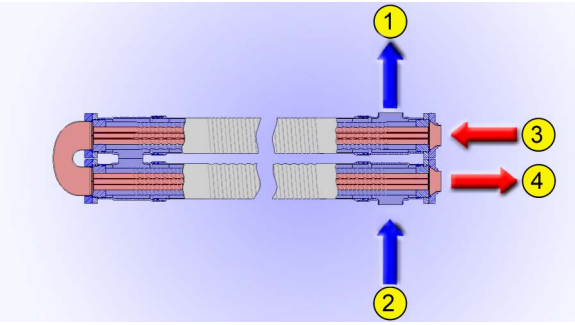

(Cont'd)

(Cont'd)

Tetra Spiraflo CC

The Tetra Spiraflo CC tube is a concentric tube where the product channel is surrounded by medium on both sides. The figure shows a heat exchanger that is cooling down the product with medium. The hot product enters the heat exchanger [3] and exits the heat exchanger [4] after cooling.

The outer cooling medium enters the heat exchanger [2] and exits the heat exchanger [1] and the inner cooling medium enters the heat exchanger [6] and exits the heat exchanger [5].

The product [9] is completely surrounded by the outer cooling medium [7] and the inner cooling medium [8].

Function overview and section of tube

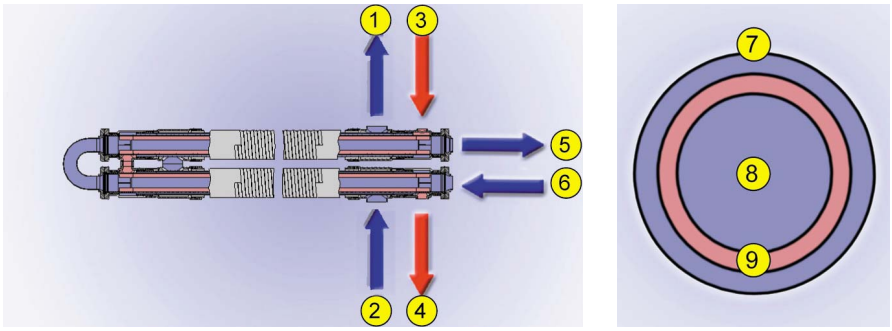

2.2tf506214.en

Configuration

The system is modular in its design and uses standardized items. This allows complete flexibility in system configuration.

The module design is based on a shell and tube concept having product flowing through exchangeable tube inserts contained within a surrounding shell carrying the heat exchange medium. Each module is connected to another unit by a series of shell interconnections (for media) and bends (for product). For Tetra Spiraflo CC tubes the product is transferred in the shell interconnections and the medium in the bends and interconnections. The medium and product can therefore be diverted vertically or horizontally to design requirements and be configured to operate various hot and cold functions within the same system. Each shell is held in position by shell supports. The shell supports are mounted on the base frame.

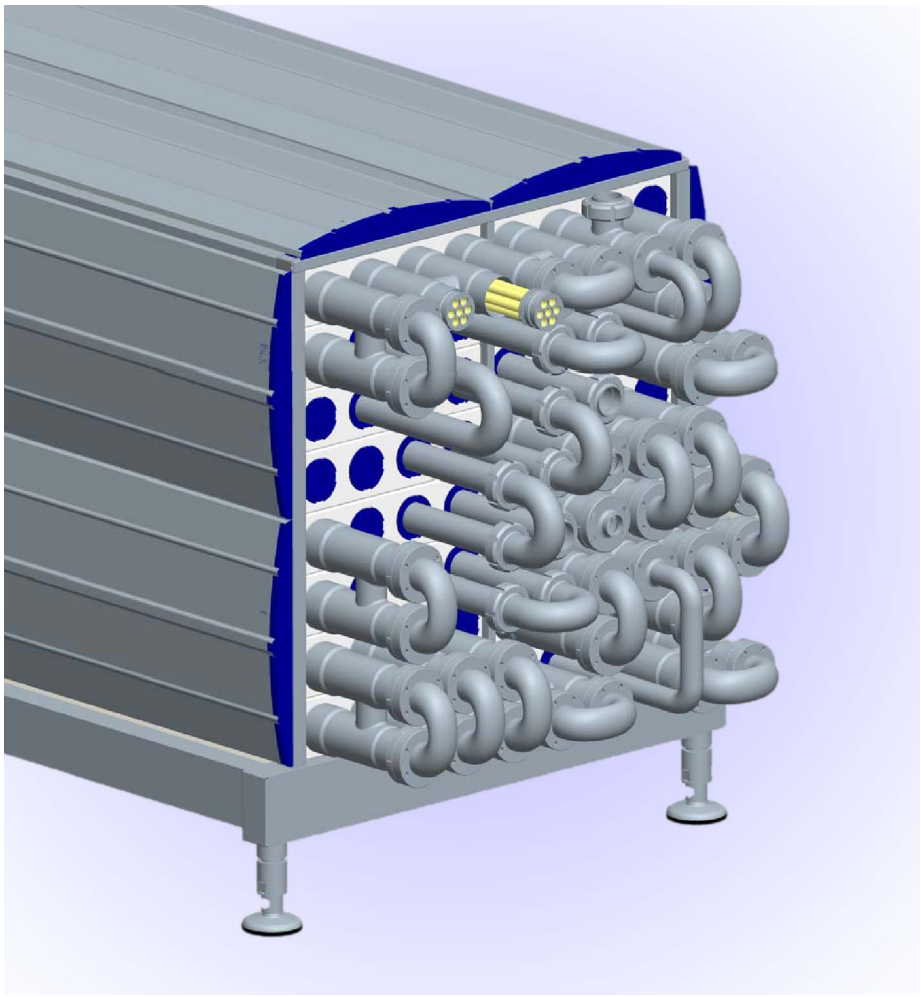

2.2tf506214.en

Maintenance

General

Maintenance Stop

DANGER!

Risk of burns!
Make sure that the heat exchanger is not pressurized.

DANGER!

Risk of crushing!
Risk that the shell connection/interconnection falls down, during assembling or disassembling. Two technicians are needed to carry out these tasks.

WARNING!

Risk of burns!
Hot surfaces. The heat exchanger is hot and it can result in personnel injury.

Before any work can be done on the Tetra Spiraflo unit a maintenance stop must be performed.

a) Make a CIP cleaning.

b) Make sure that the heat exchanger is not pressurized.

2.2tf506214.en

Maintenance Intervals

Maintenance interval depends on running conditions but a general recommendation is to replace the product seal rings and O-rings every second year or after 6,000 h depending on which comes first.

For Tetra Spiraflo CMR and CMRF with product recovery temperature above 90°C our maintenance interval recommendation is to replace the product seal rings and O-rings after 3,000 h.

All screws shall be replaced after 6 years.

Torque Table

This table is valid unless other torques are stated in the procedure.

M8	16 Nm
M10	32 Nm
M12	56 Nm

Check and Replace Procedure, Tetra Spiraflo C except CMRF and CC

Remove Product Bend or Connection

a) Remove the product bend or connection [2] from the two split rings [1] by removing the screws [3].

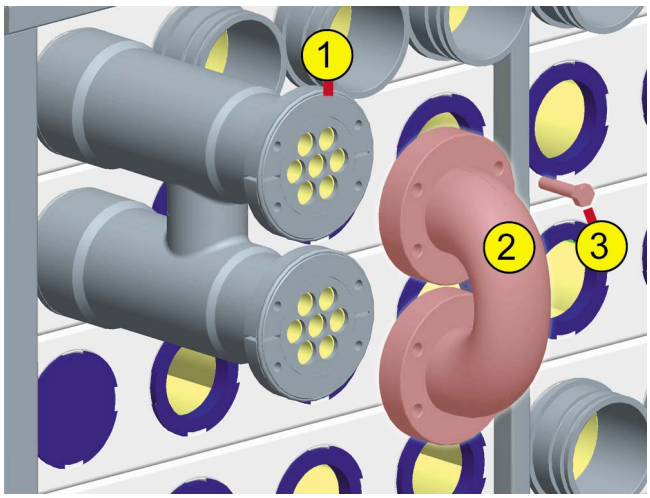

1 Split rings
2 Product bend
3 Screws

Note! The figure shows a product bend. It is the same procedure for connections.

2.2tf506214.en

Remove Split Ring

a) Hold the upper and lower split ring [1] and [2] together by hand and remove the O-ring [3].

b) Remove the upper and lower split ring [1] and [2].

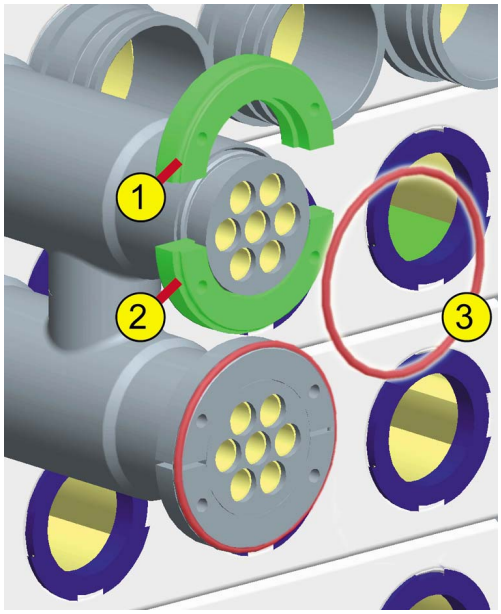

1 Upper split ring
2 Lower split ring
3 O-ring

Note! The purpose of the O-ring is only to hold the upper and lower split ring in place during the mounting and removing procedure.

2.2tf506214.en

Remove Shell Interconnection

a) Hook on the slide hammer [3] onto the shell interconnection [1] and force the weight [2] backwards to remove the shell interconnection [1].

b) Remove the shell interconnection [6] from the shell [4] and the tube inserts [5].

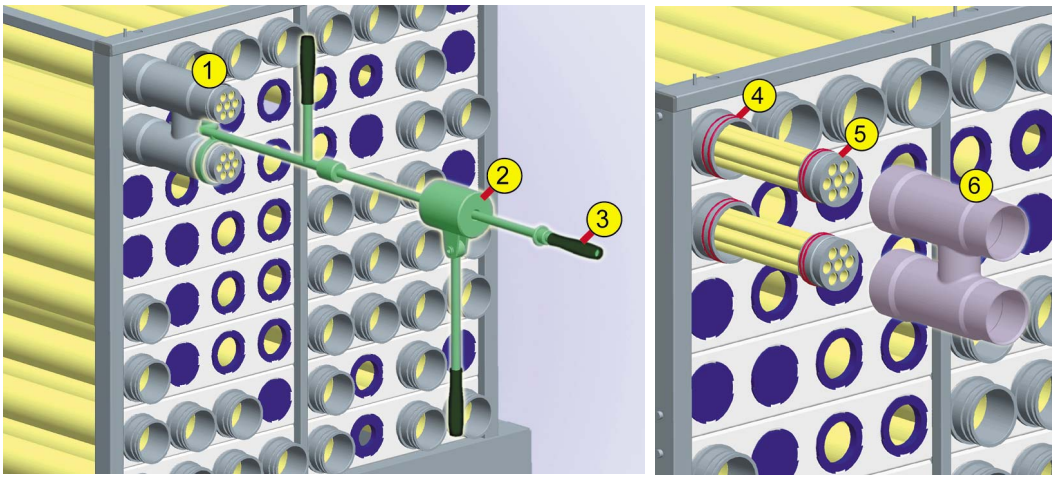

1 Shell interconnection
2 Weight
3 Slide hammer
4 Shell
5 Tube inserts
6 Shell interconnection

2.2tf506214.en

Note! If the shell interconnection is jammed or hard to remove, use the slide hammer and try to move the shell interconnection inwards. Then try to remove it again with a slightly different angle of the tool.

Note! Regarding the models C25-C38 no tools are provided to remove shell interconnection. If the shell interconnection [1] is jammed or hard to remove, fasten a plastic strap around the connection and pull the shell interconnection off.

Check / Replace Shell and Tube Inserts O-ring

a) Check / Replace the O-rings [1] on the shell [3]. Lubricate the O-rings.

b) Check / Replace the O-rings [2] on the tube inserts [4]. Lubricate the O-rings.

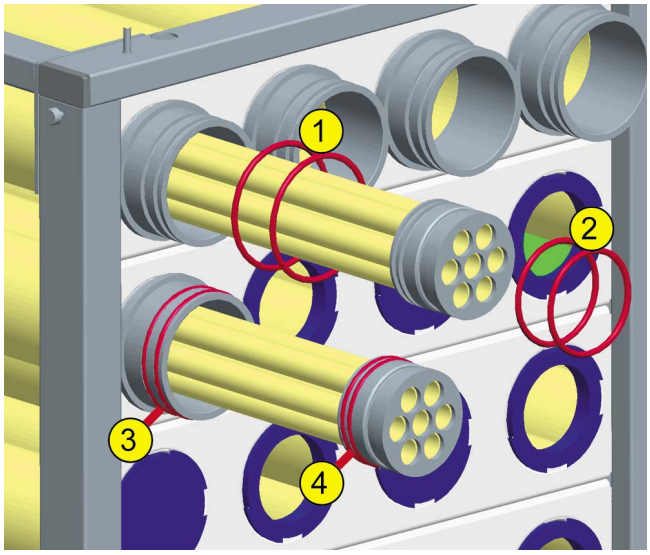

1 O-rings
2 O-rings
3 Shell
4 Tube inserts

Note! Recommended grease:
Klüber Unisilicon L 250 L (6-4722567601) or
Molycote SR Grease (6-164009905).

Note! Tetra Spiraflo C25-C38, CMR and CMRF have only one O-ring in each position [1] and [2].

Note! Tetra Spiraflo CMR and CMRF have different O-ring rubber quality.

2.2tf506214.en

Mount Shell Interconnection

a) Slide the shell interconnection [3] in and over the tube inserts [2] onto the shell [1].

b) Hook on the slide hammer [6] onto the shell interconnection [4] and force the weight [5] on the slide hammer forward to hammer the shell interconnection [4] into place on the shell.

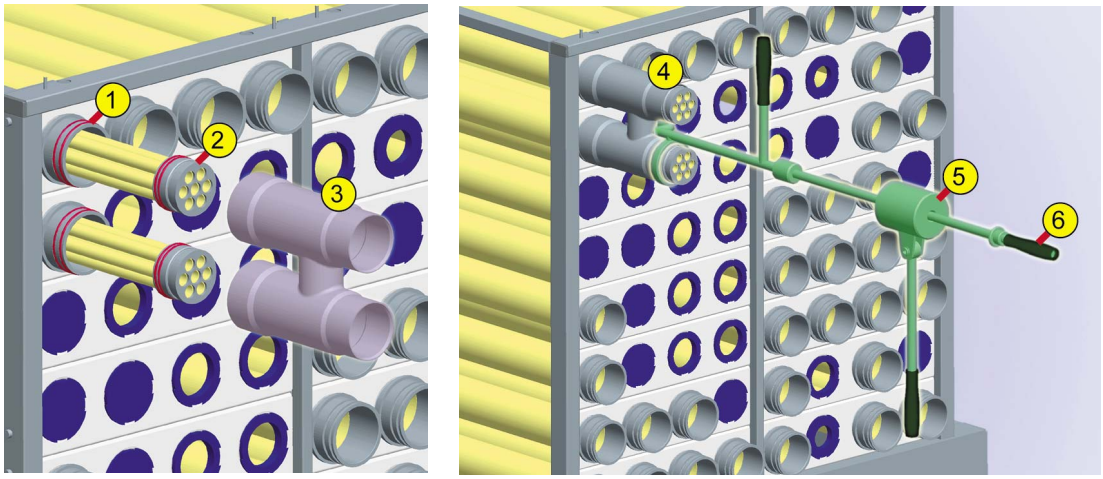

1 Shell
2 Tube inserts
3 Shell interconnection
4 Shell interconnection
5 Weight
6 Slide hammer

2.2tf506214.en

Note! If the tube insert is pushed into the shell go to the opposite end and push it back. A plastic hammer can be used.

Note! The pictures above show a shell interconnection.
The procedure is the same for a shell connection.

Note! The shell interconnection for C25-C38 is mounted by pushing it on by hand.

Mount Split Ring

a) Mount the upper and lower split ring [1] and [2] on the tube inserts in the shell interconnection. Hold them together by hand.

b) Mount the O-ring [3] on the upper and lower split ring [1] and [2].

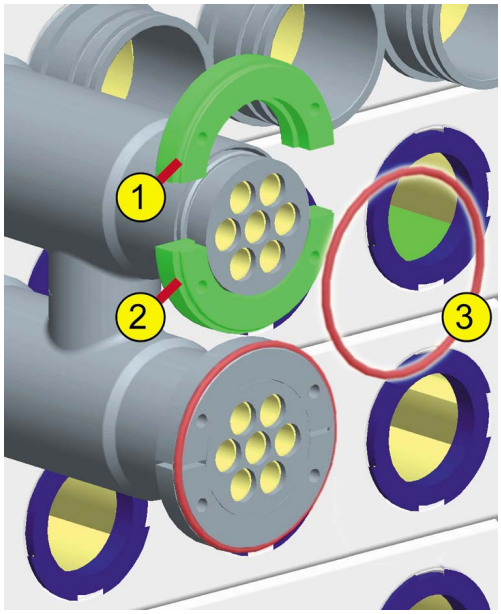

1 Upper split ring
2 Lower split ring
3 O-ring

2.2tf506214.en

Note! The purpose of the O-ring is only to hold the upper and lower split ring in place during the mounting and removing procedure.

Note! The picture above shows a shell interconnection.
The procedure is the same for a shell connection.

Mount Product Bend or Connection

a) Mount the two seal rings [2] on the product bend [1].

b) Mount the product bend [4] on the two split rings [3].

c) Tighten the screws [5] crosswise. Use lubricating paste.

Caution! If the unit contains a mix of material quality SMO v.s 316 it is very important that the bends of each material quality are put back in right position/place. The material quality is marked on the flanges of the bends.

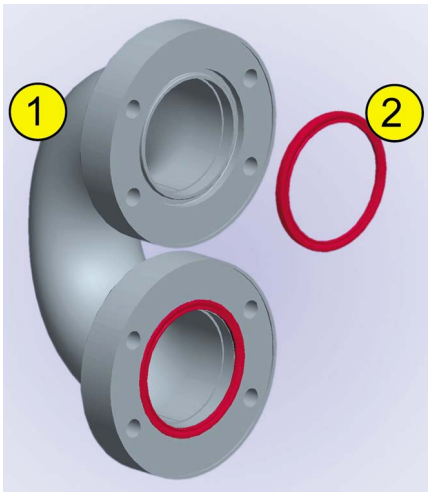

1 Product bend
2 Seal ring
3 Split rings

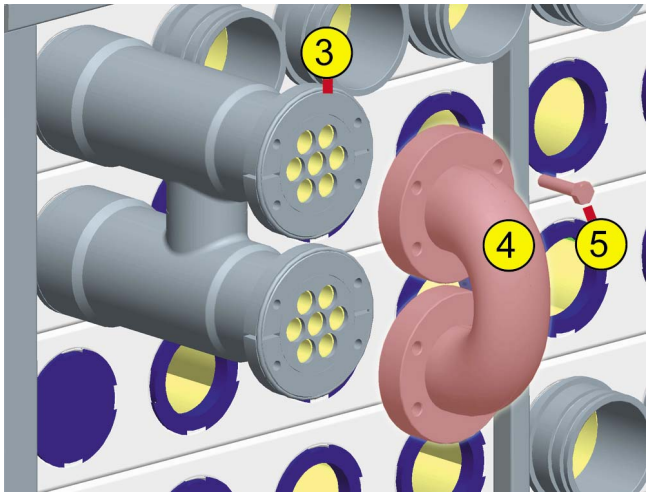

4 Product bend
5 Screws

2.2tf506214.en

Note! Do not use grease on the two seal rings in the product bend.

Note! PTFE seal rings can only be assembled once due to plastic deformation of the seal ring. If assembled a second time the seal ring might not seal properly.

Note! The figure shows a product bend. Same procedure for product connections.

Check and Replace Procedure, Tetra Spiraflo CMRF

Remove Product Bend or Connection

The spring package is always mounted on the front end.

a) Remove the product bend [2] or the connection from the two split rings [1] by removing the screws [3]. Do this on the front end and rear end.

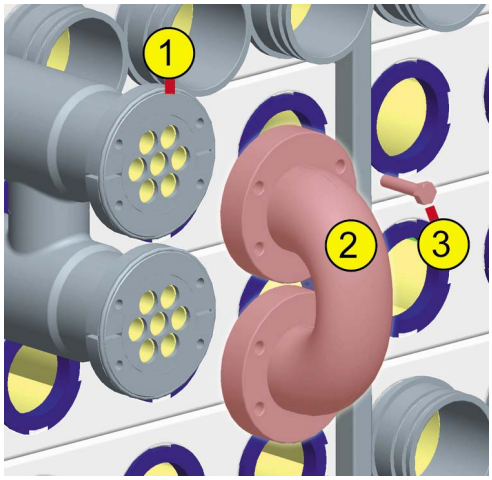

1 Split rings
2 Product bend
3 Screws

2.2tf506214.en

Note! The figure shows a product bend. Same procedure for product connections.

WARNING!

Remove Split Ring

Risk of injury!
Stand at the side of the heat exchanger when hydraulic pressure is applied.

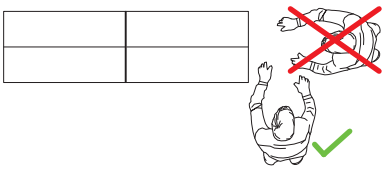

a) Mount the two threaded rods [3] on the shell, make sure that the rods are screwed into the stop nut.

b) Mount the compression tool [5] or the yoke [6] onto the rods [3] and secure it with the nuts.

c) Pump up [1] the hydraulic pressure until the manometer [2] shows a force according to the table below. The compression tool has now pushed the insert [4] backwards so it is possible to remove the split ring on the rear end.

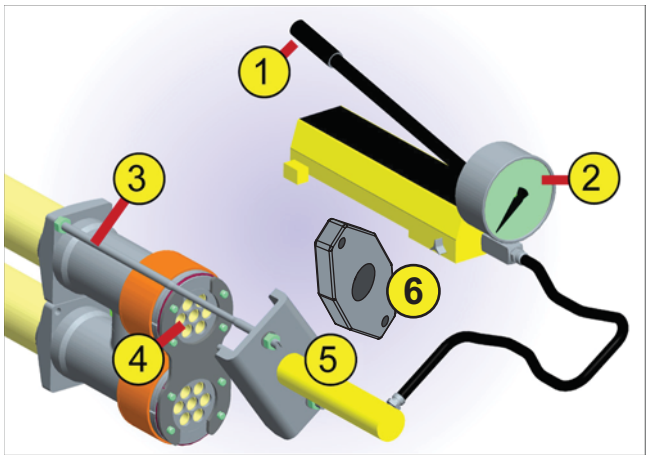

1 Pump handle
2 Manometer
3 Rods
4 Insert
5 Compression tool
6 Yoke CMRF 108 19x15/CMRF 129

2.2tf506214.en

Caution! **Possible machine damage.**
Do not exceed the force in the table below.

Model	Force
CMRF 70	22000 N
CMRF 85	26000 N
CMRF 108 7x25	22000 N
CMRF 108 19x15	41000 N
CMRF 129	50000 N

(Cont'd)

(Cont'd)

d) In the rear end, remove the upper [6] and lower [7] split ring by removing the O-ring [8] that holds the two parts together.

e) Release the pressure and remove the compression tool.

f) Remove the split ring in the front. If the insert is too far in use, a plastic hammer to move the insert forward in the rear end.

g) Repeat step a to f on next split ring.

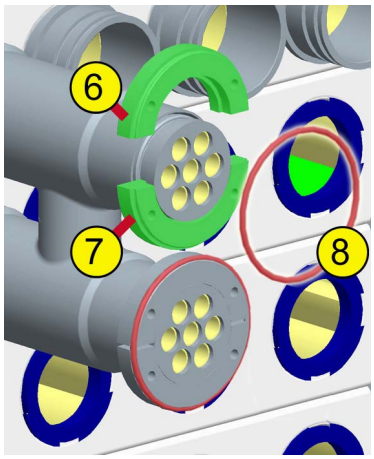

6 Upper split ring
7 Lower split ring
8 O-ring

Note! The purpose of the O-ring is only to hold the upper and lower split ring in place during the mounting of the product bend.

2.2tf506214.en

Remove Spring Package

a) Remove the spring package [2] from the shell interconnection [1].

b) Do the same with the lower spring package.

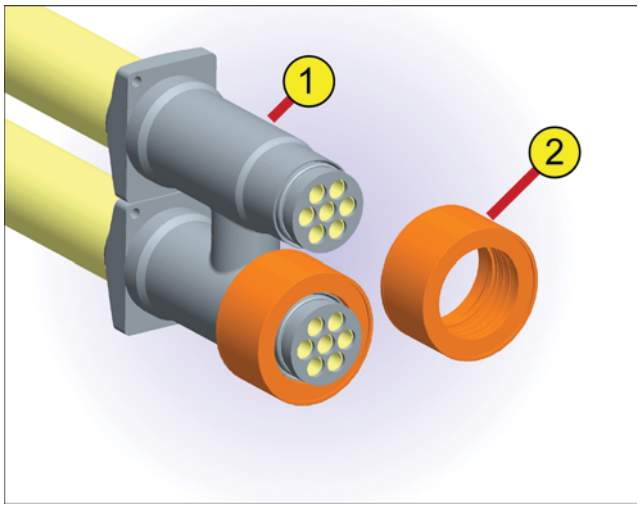

1 Shell interconnection
2 Spring package

Note! The picture above shows a shell interconnection.
Same procedure for shell connections.

Note! There are two variants of spring package for CMRF 108, 7x25 and 19x15.
Check spare part list to get correct variant.

2.2tf506214.en

Remove Shell Interconnection

a) Hook on the slide hammer [3] onto the shell interconnection [1] and force the weight [2] backwards to remove the shell interconnection [1].

b) Remove the shell interconnection [6] from the shell [4] and the tube inserts [5].

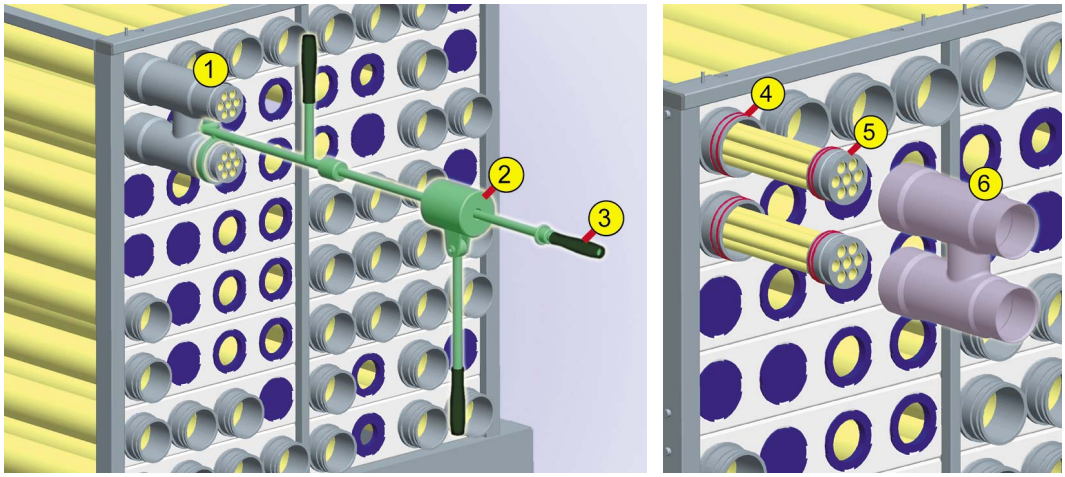

1 Shell interconnection
2 Weight
3 Slide hammer
4 Shell
5 Tube inserts
6 Shell interconnection

2.2tf506214.en

Note! The pictures above show a shell interconnection.
Same procedure for shell connections.

Note! If the shell connection is jammed or hard to remove, use the slide hammer and try to move the connection inwards. Then try to remove it again with a slightly different angle of the tool.

Check / Replace Shell and Tube Insert O-rings

a) Check / Replace the O-ring [1] on the shell [3]. Lubricate the O-ring.

b) Check / Replace the O-ring [2] on the tube inserts [4]. Lubricate the O-rings.

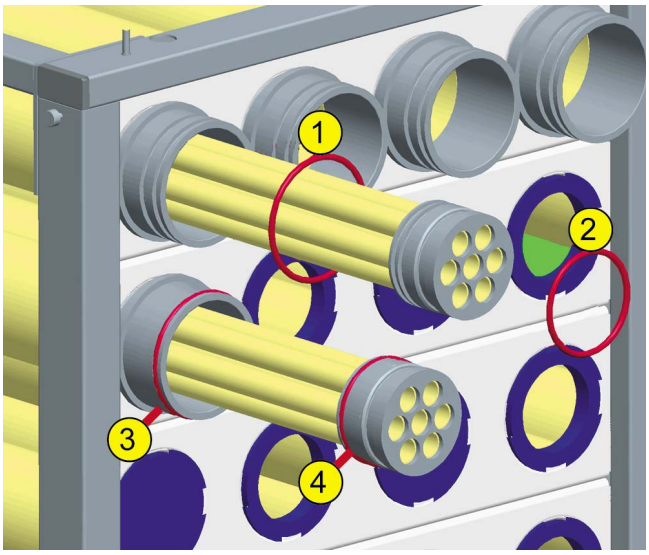

1 O-ring for shell
2 O-ring for tube insert
3 Shell
4 Tube inserts

Note! Recommended grease:
Klüber Unisilicon L 250 L-6-4722567601 or
Molycote SR Grease 6-164009905.

Note! Tetra Spiraflo CMR and CMRF has only one O-ring in each position [1] and [2].

Note! Tetra Spiraflo CMR and CMRF have different O-ring rubber quality.

2.2tf506214.en

Mount Shell Interconnection

a) Position the shell interconnection [3] in and over the tube inserts [2] to the shell [1].

b) Hook on the slide hammer [6] onto the shell interconnection [4] and force the weight [5] forward to move the shell interconnection [4] into place.

c) Repeat step a-b on the other side.

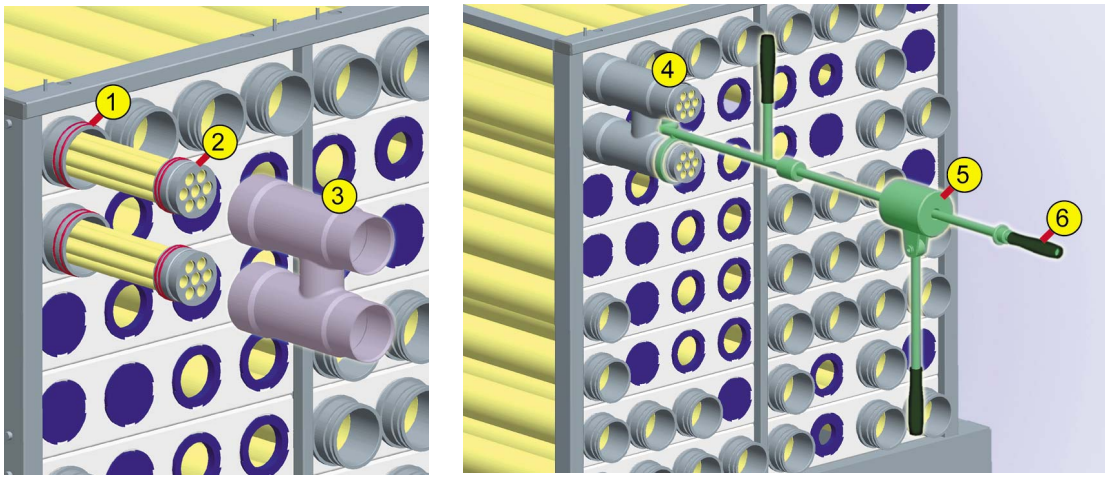

1 Shell
2 Tube inserts
3 Shell interconnection
4 Shell interconnection
5 Weight
6 Slide hammer

2.2tf506214.en

Note! The pictures above show a shell interconnection.
Same procedure for shell connections.

Note! If the tube insert is pushed into the shell, go to the opposite end and push it back. A plastic hammer can be used.

Mount Spring Package, Split Ring and Connection

The spring package is always mounted on the front end where all the connections are. The figure shows the spring package mounted on a shell interconnection. The mounting procedure is the same for shell connections.

a) Mount the spring package [3] on the shell interconnection [1] (shell connection).

b) From the rear end, push the insert [2] so that the groove on the insert [2] is visible at the front end.

c) In the front end, mount the upper [4] and lower [6] split ring in the groove of the insert [2]and mount the O-ring [5] that holds the two parts together.

d) Mount the eight stud screws [7] in to the upper [4] and lower [6] split rings.

e) Mount the guide plate [8] and rotate the split rings in order to align them so the guide plate [8] will fit onto the stud screws [7].

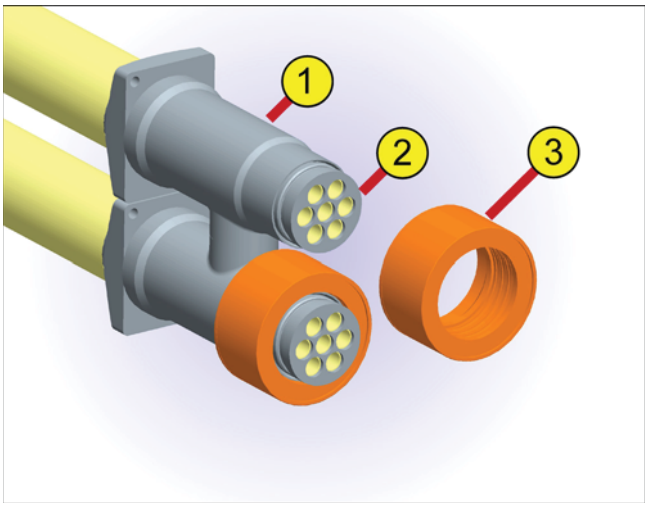

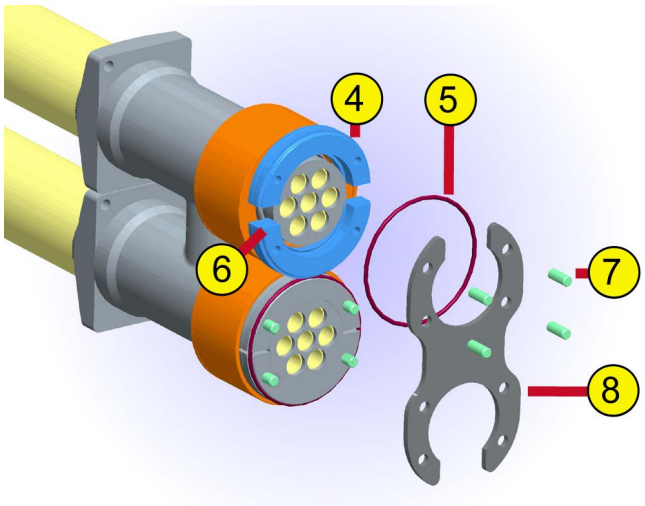

1 Shell interconnection
2 Insert
3 Spring package
4 Upper split ring
5 O-ring
6 Lower split ring
7 Stud screws
8 Guide plate

Note! There are two variants of spring package for CMRF 108, 7x25 and 19x15. Check spare part list to get correct variant

(Cont'd)

2.2tf506214.en

(Cont'd)

f) Mount the two threaded rods [3] on the shell. Make sure that the rods are screwed in to the stop nut.

g) Mount the compression tool [5] or the yoke [11] onto the rods [3] and secure it with the nuts.

WARNING!

h) **Risk of injury!**
Stand at the side of the heat exchanger when hydraulic pressure is applied.

i) Pump up [1] the hydraulic pressure merely for the split rings to be fixed. Remove the guiding plate [10] and the stud screws [9].

j) Pump up [1] the hydraulic pressure until the manometer [2] shows a force according to the table below. The compression tool has now pushed the insert [4] backwards so it is possible to mount the split rings on the rear end.

k) In the rear end mount the upper [6] and lower [7] split rings. In the groove of the split rings, mount the O-ring [8] that holds the two parts together.

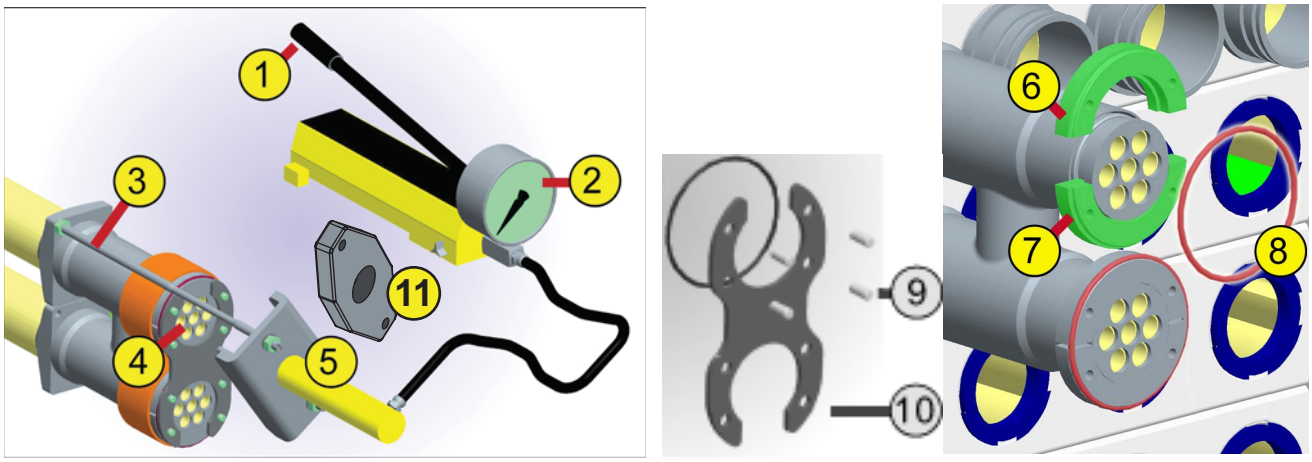

2.2tf506214.en

1 Pump handle
2 Manometer
3 Rods
4 Insert
5 Compression tool
6 Upper split ring
7 Lower split ring
8 O-ring
9 Stud screws
10 Guiding plate
11 Yoke CMRF 108 19x15/CMRF 129

Caution! **Possible machine damage.**
Do not exceed the force in the table below.

Model	Force
CMFR 70	22000 N
CMFR 85	26000 N
CMFR 108 7x25	22000 N
CMRF 108 19x15	41000 N
CMRF 129	50000 N

(Cont'd)

(Cont'd)

l) Mount the two seal rings [2] on the product bend [1].

m) On the rear end, rotate the split rings to align them to the product bend [4].

n) Mount the product bend [4] on the split rings [3] and tighten the screws [5] crosswise. Use lubricating paste for the screws.

Caution! If the unit contains a mix of material quality SMO v.s 316 it is very important that the bends of each material quality are put back in right position/place. The material quality is marked on the flanges of the bends.

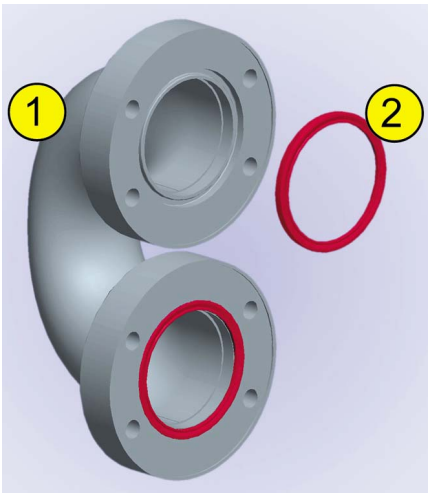

1 Product bend
2 Seal ring
3 Split ring

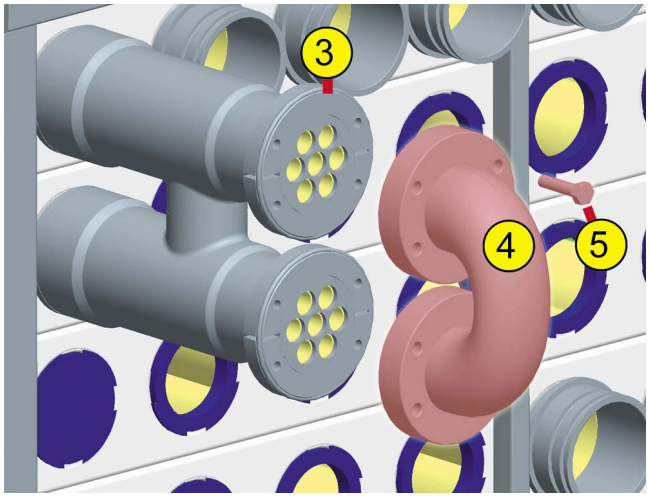

4 Product bend
5 Screws

2.2tf506214.en

Note! Do not use grease on the two seal rings in the product bend.

Note! The figure shows a product bend.
Same procedure for shell connections.

Note! PTFE seal rings can only be assembled once due to plastic deformation of the seal ring. If assembled a second time the seal ring might not seal properly.

(Cont'd)

(Cont'd)

o) Release the hydraulic pressure with the valve [6] on the pump. The compression tool [5] or [7] will move away from the insert [4] and the hydraulic pressure will drop, see the manometer [2].

p) Remove the two nuts on the threaded rod that holds the compression tool and remove the compression tool.

q) Remove the two threaded rods.

Repeat the procedure for the lower tube.

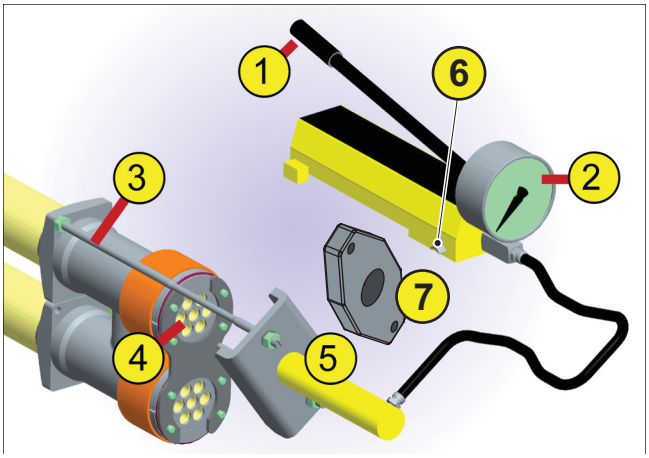

1 Pump handle
2 Manometer
3 Rod
4 Insert
5 Compression tool
6 Valve
7 Yoke CMRF 108 19x15/CMRF 129

2.2tf506214.en

Check and Replace Procedure, Tetra Spiraflo CC70

Remove Connection Block

a) Remove the medium connection [5] by removing the nut [6] from the inner tube [2].

b) Remove the connection block [4] onto the split rings [1] by removing the four bolts [3].

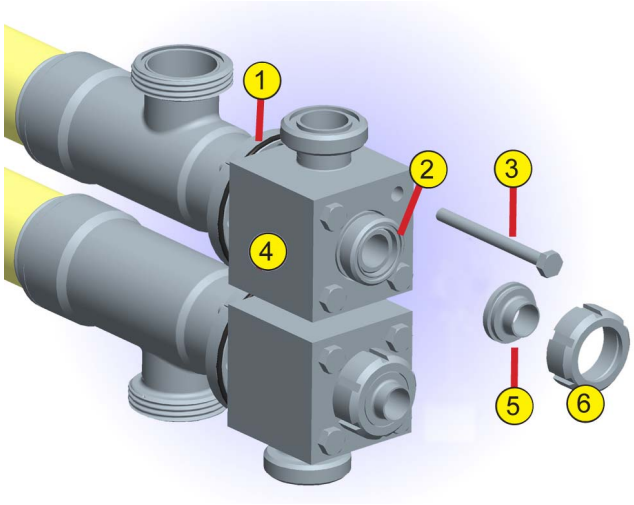

1 Split rings
2 Inner tube
3 Bolts
4 Connection block
5 Media connection
6 Nut

2.2tf506214.en

Remove Split Ring, Inner Tube and Torpedo

Caution! **Crushing hazard.**
Moving heavy loads.

a) Remove the O-ring [4].

b) Remove the upper and lower split ring [2] and [3] on the outer tube [1].

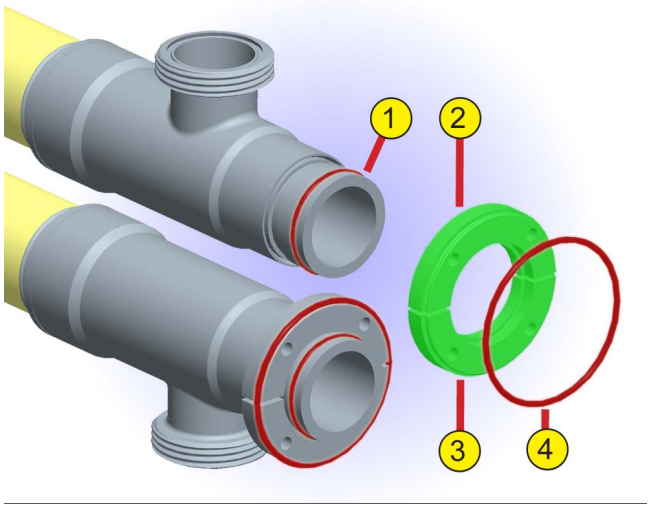

1 Outer tube
2 Upper split ring
3 Lower split ring
4 O-ring

2.2tf506214.en

Note! Let the distance from the tubes to the shell be equal on the front and rear end.

Note! Recommended grease:
Klüber Unisilicon L 250 L (6-4722567601) or
Molycote SR Grease (6-164009905).

Remove and Mount Tube Insert and Shell Connection

WARNING!

Crushing hazard!
Moving heavy loads.

a) Remove the shell connection [7] from the shell [1] and the outer tube [3] by using the slide hammer.
b) Replace the two O-rings [5] in the grooves on the shell [2].
c) Replace the three O-rings [6] in the grooves on the outer tube [4].
d) Lubricate the O-rings.
e) Mount the shell connection [7] by pressing it onto the shell [1] and the outer tube [3] by using the slide hammer.

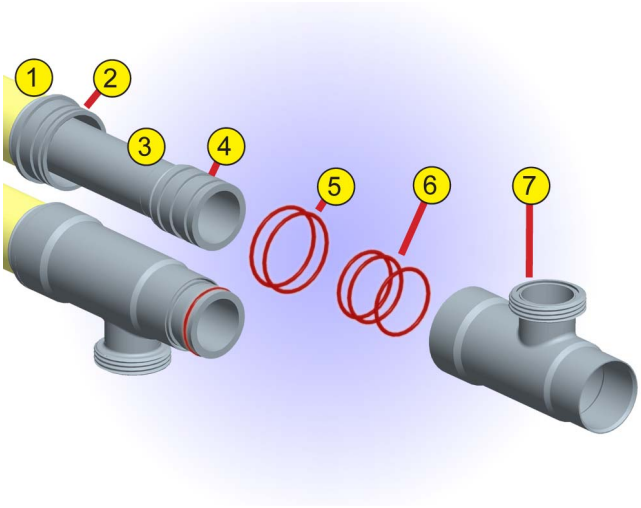

1 Shell
2 Grooves for O-rings
3 Outer tube
4 Grooves for O-rings
5 O-rings
6 O-rings
7 Shell connection

2.2tf506214.en

Note! Let the distance from the tubes to the shell be equal on the front and rear end.

Note! Recommended grease:
Klüber Unisilicon L 250 L (6-4722567601) or
Molycote SR Grease (6-164009905).

Note! The picture above shows a shell connection.
Same procedure for shell interconnections.

Mount Split Ring, Inner Tube and Torpedo

WARNING!

Crushing hazard!
Moving heavy loads.

a) Mount the upper and lower split rings [2] and [3] on the outer tube [1]. Hold them together by hand.
b) Mount the O-ring [4] on the upper and lower split ring [2] and [3].
c) Push out the torpedo [7] from the inner tube [5].
d) Mount the two O-rings [10] in the grooves on the inner tube [6].
e) Mount the O-ring [9] in to the grooves on the torpedo [8].
f) Lubricate the O-rings.
g) Push in the torpedo [7] into the inner tube [5].

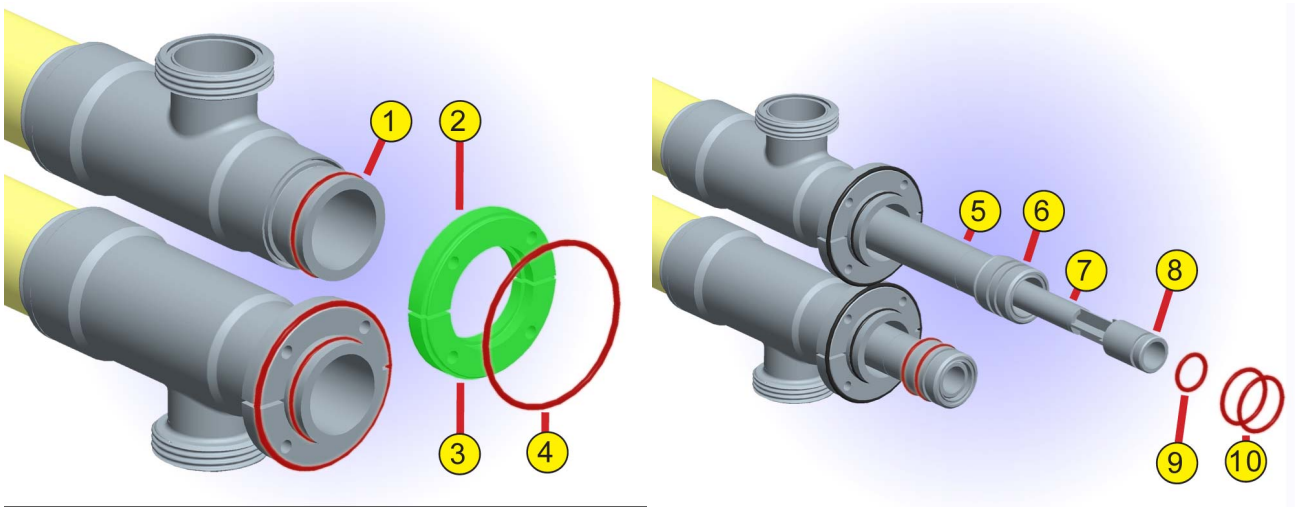

2.2tf506214.en

1 Outer tube
2 Upper split ring
3 Lower split ring
4 O-ring
5 Inner tube
6 Grooves for O-rings
7 Torpedo
8 Grooves for O-rings
9 O-ring
10 O-rings

Note! Let the distance from the tubes to the shell be equal on the front and rear end.

Note! Recommended grease:
Klüber Unisilicon L 250 L (6-4722567601) or
Molycote SR Grease (6-164009905).

Note! Tetra Spiraflo CC 70 - Wide gap does not have a torpedo.

Mount Connection Block

a) Mount the product seal ring [1] in the connection block [2].

b) Mount the connection block onto the split rings [3] and tighten the four bolts [5].

c) Mount the O-ring [6] in the groove in the front of the inner tube [4].

d) Mount the medium connection [7] by tightening the nut [8].

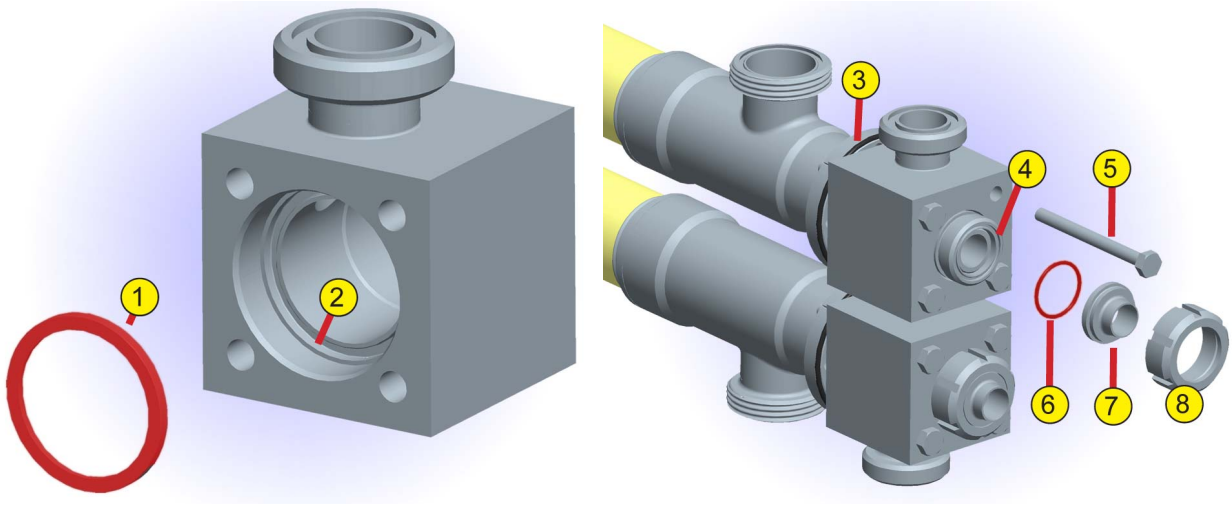

1 Product seal ring
2 Connection block
3 Split rings
4 Inner tube
5 Bolts
6 O-ring
7 Media connection
8 Nut

2.2tf506214.en

Check and Replace Procedure, Tetra Spiraflo CC108

Remove Media Bend or Connection

a) Remove the media bend [2] from the two split rings [1] by removing the screws [3].

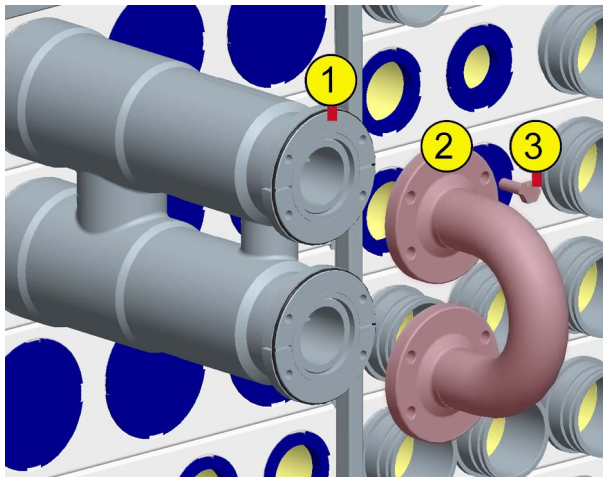

1 Split rings
2 Media bend
3 Screws

Note! The figure shows a media bend. Same procedure for product connections.

2.2tf506214.en

Remove Split Ring

a) Remove the O-ring [3] on the upper and lower split ring [1] and [2].

b) Remove the upper and lower split ring [1] and [2] on the tube inserts in the shell interconnection.

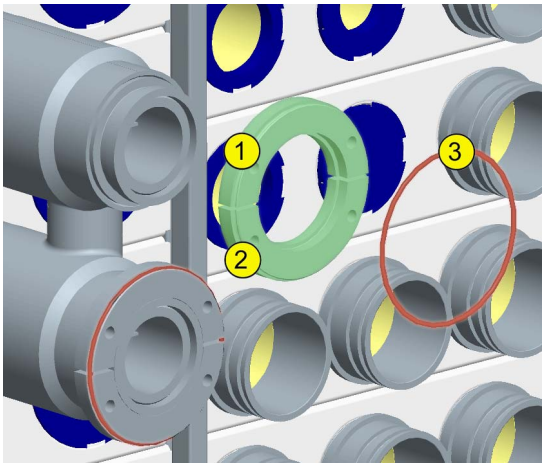

1 Upper split ring
2 Lower split ring
3 O-ring

Note! The purpose of the O-ring is only to hold the upper and lower split ring in place during the mounting of the product bend.

Note! The picture above shows a shell interconnection.
Same procedure for shell connections.

2.2tf506214.en

Remove Head Connection

a) Mount the right size of the hammer cross [2] onto the slide hammer [4].

b) Mount the slide hammer [4] onto the head connection.

c) Use the slide hammer to remove the dual head connection [10].

d) Remove the O-rings [6] in the grooves of the outer tube [8].

e) Remove the O-rings [7] in the grooves of the inner tube [9].

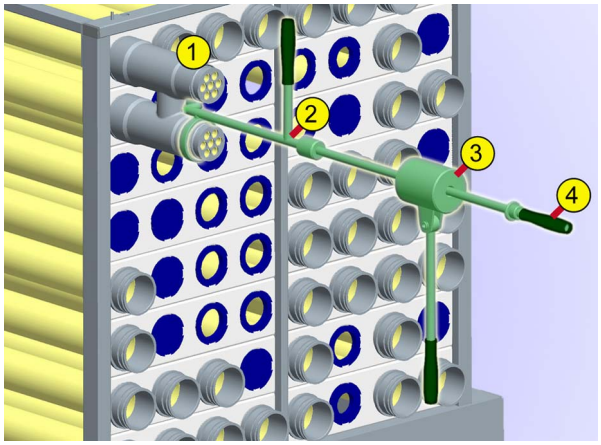

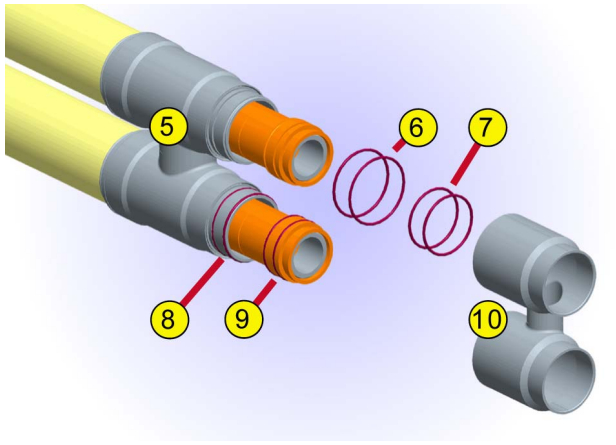

1 Shell interconnection
2 Hammer cross
3 Weight
4 Slide hammer
5 Shell interconnection
6 O-rings
7 O-rings
8 Grooves for o-rings
9 Grooves for o-rings
10 Dual head connection

2.2tf506214.en

Note! The pictures above show a dual head connection on a shell interconnection. Same procedure for a single head connection on a shell connection.

Remove Shell Connection

a) Use the slide hammer to remove the shell connection [3] and [4] in the same way as in the previous section.

b) Remove the O-rings on the shell [1].

c) Remove the O-rings on the outer tube [2].

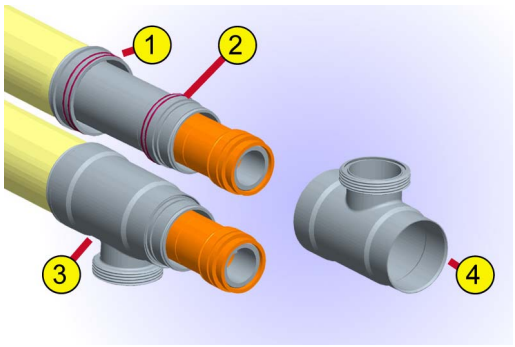

1 Shell
2 Outer tube
3 Shell connection
4 Shell connection

Note! The picture above shows a shell connection.
Same procedure for shell interconnections.

2.2tf506214.en

Check / Replace Shell and Tube Inserts O-rings

a) Check / Replace the O-rings [3] on the shell [1]. Lubricate the O-rings.

b) Check / Replace the O-rings [4] on the outer tube [2]. Lubricate the O-rings.

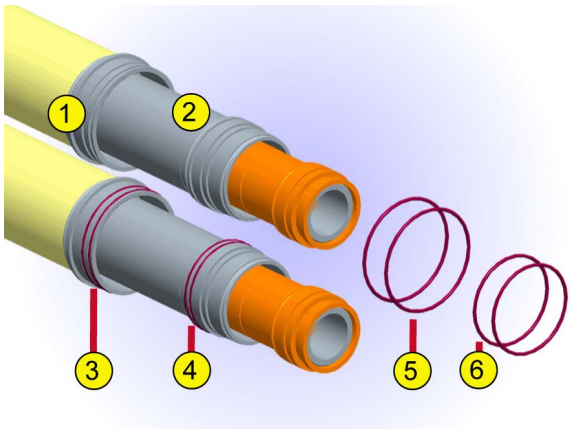

1 Shell
2 Outer tube
3 O-rings
4 O-rings
5 O-rings
6 O-rings

Note! Recommended grease:
Klüber Unisilicon L 250 L (6-4722567601) or
Molycote SR Grease (6-164009905).

2.2tf506214.en

Mount Shell Connection

a) Mount the shell connection [3] by pressing it onto the shell [1] and the outer tube [2].

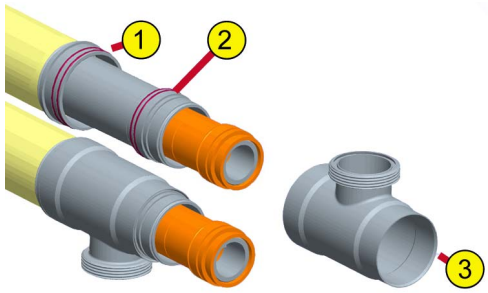

1 Shell
2 Outer tube
3 Shell connection

b) Mount the right size of the hammer cross [5] onto the slide hammer [7].

c) Mount the hammer cross [5] of the slide hammer [7] onto the shell interconnection [4] and hammer with the weight [6] to force the shell interconnection [4] into place on the shell.

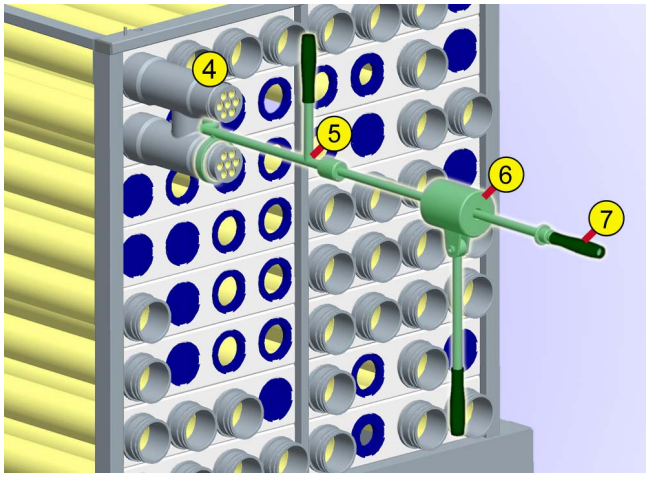

4 Shell interconnection
5 Hammer cross
6 Weight
7 Slide hammer

Note! The two pictures above show one shell connection and one shell interconnection.

Note! If the tube insert is pushed into the shell, go to the opposite end and push it back.
A plastic hammer can be used.

2.2tf506214.en

Mount Head Connection

a) Mount the O-rings [2] into the grooves on the outer tube [4].

b) Mount the O-rings [3] into the grooves in the inner tube [5].

c) Lubricate the O-rings.

d) Mount the dual head connection [6] by pressing it onto the shell interconnection [1].

e) Use the slide hammer to force the dual head connection [6] onto the shell interconnection [1] in the same way as in section.

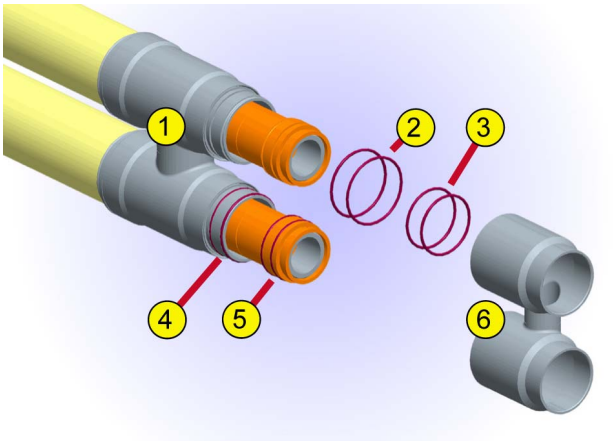

1 Shell interconnection
2 O-rings
3 O-rings
4 Shell interconnection
5 Outer tube
6 Dual head connection

2.2tf506214.en

Note! Recommended grease:
Klüber Unisilicon L 250 L (6-4722567601) or
Molycote SR Grease (6-164009905).

Note! The picture above shows a dual head connection on a shell interconnection. Same procedure for a single head connection on a shell connection.

Mount Split Ring

a) Mount the upper and lower split ring [1] and [2] on the tube inserts in the shell interconnection. Hold them together by hand.

b) Mount the O-ring [3] on the upper and lower split ring [1] and [2].

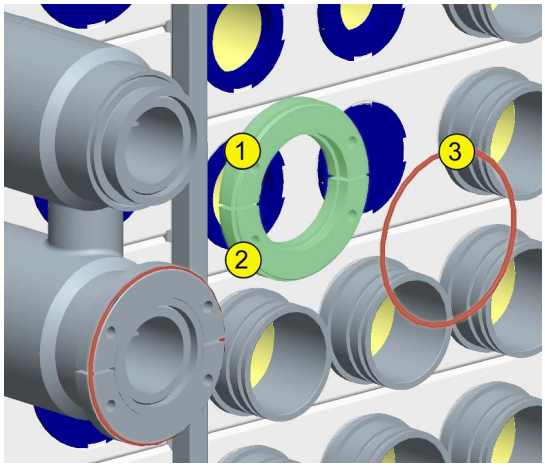

1 Upper split ring
2 Lower split ring
3 O-ring

Note! The purpose of the O-ring is only to hold the upper and lower split ring in place during the mounting of the product bend.

Note! The picture above shows a shell interconnection.
Same procedure for shell connections.

2.2tf506214.en

Mount Media Bend

a) Mount the two seal rings [2] on the media bend [1].

b) Mount the media bend [4] on the two split rings [3] and tighten the screws [5] crosswise. Use lubricating paste for the screws.

Caution! If the unit contains a mix of material quality SMO v.s 316 it is very important that the bends of each material quality are put back in right position/place. The material quality is marked on the flanges of the bends.

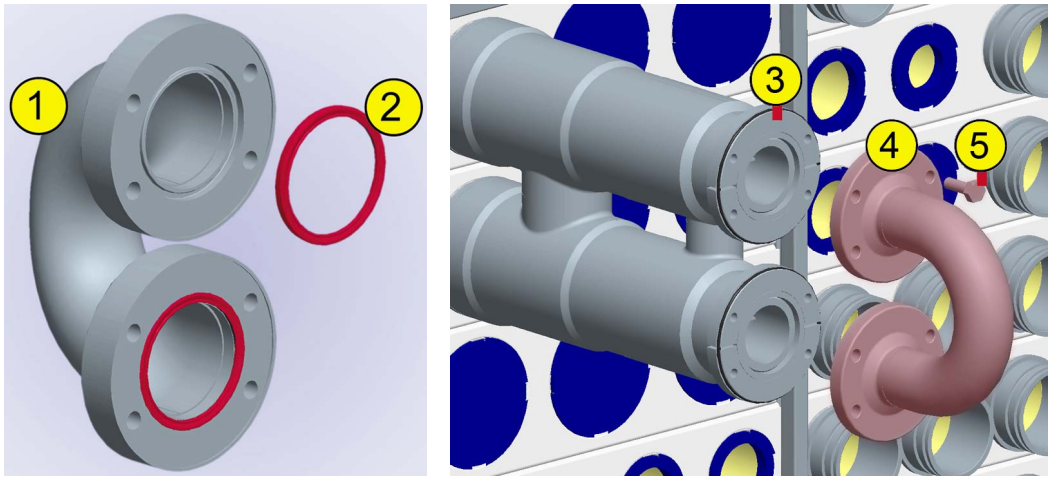

1 Media bend
2 Seal rings
3 Split rings
4 Media bend
5 Screws

2.2tf506214.en

Note! Do not use grease on the two seal rings in the media bend.

Pressure Test

The pressure test of Tetra Spiraflo tubular heat exchanger can be done in two ways:

- Case 1: Pressure test with the feeding water pressure (5-10 bar), for example after inspection or replacement of O-rings.
- Case 2: Pressure test with max. working pressure according to the machine sign, for example after rebuilding, after replacement of pressure loaded parts or when a leakage in a tube insert or shell is suspected.

Case 1

a) Connect feeding water with an on/off valve to the section that is to be tested.

b) Connect an on/off valve in the other end.

c) Fill the system with water and let it flow for 5-25 minutes to ensure that all the air has been evacuated.

d) Shut off the valve on the outflow.

e) Check the heat exchanger for leakages under a period of 5-20 minutes.

f) Remove the test equipment and drain the heat exchanger.

2.2tf506214.en

Case 2

Pressure test medium (water) should have the same temperature as surrounding environment before the pressure test can start. All surfaces should be dry. All air should be evacuated. Normally both sides (shell and inserts) are pressure tested, but not simultaneously. Test one side at the time.

a) Connect feeding water with a pressure booster and a shut-off valve to the section that is to be tested.

b) Connect an on/off valve to the other end.

c) Fill the system with water and let it flow for 5-25 minutes to ensure that all air has been evacuated.

d) Shut off the valves on both sides.

e) Connect a manometer to the water exit side and open the valve.

f) Open the valve on feeding water side and start the pressure booster. Carefully increase pressure to 1.6 x (max work pressure) according to machine sign. When pressure is achieved, shut off the valve on feeding water side.

Note! The pressure test factor 1.6 can vary due to local regulations.

g) Let the heat exchanger be pressurized with 1.6 x (max work pressure) for 30 minutes. Check the manometer so the pressure do not decrease.

h) Remove the test equipment and repeat step a-g for next side or next section.

i) Remove the test equipment and drain the heat exchanger.

2.2tf506214.en

Cleaning

Cleaning - External

WARNING!

Removing Cover Panels

Crushing hazard!
Moving heavy loads.

WARNING!

Risk of burns!
Hot surfaces. Use protection gloves!
The heat exchanger is hot and it can result in personnel injury.

WARNING!

Sharp edges!
Protective gloves should be used when handling protective panels.
Damaged plastic end pieces shall be replaced.

a) Remove the top cover panels [1] by lifting them straight up [3].

b) Remove the side cover panels [2] by lifting them straight up [4] a couple of mm and then pull them straight out [5]. Start with the upper side cover panel.

2.2tf506214.en

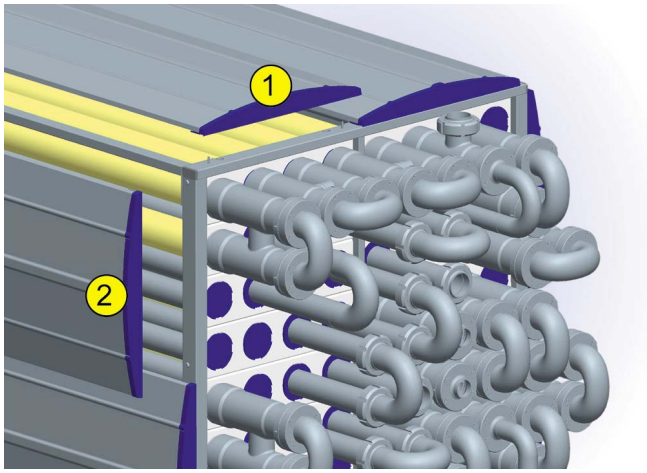

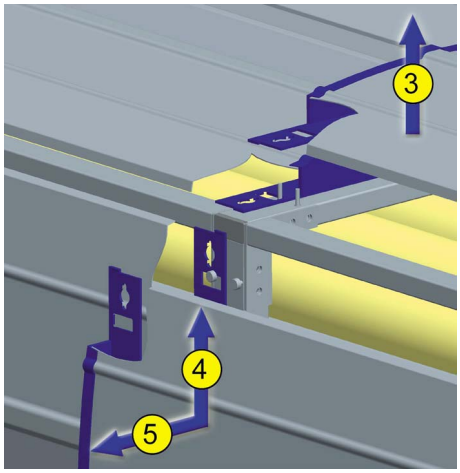

1 Top cover panels
2 Side cover panels

Note! It takes two persons to remove the cover panels safely.

Cleaning

WARNING! **Risk of burns!**
Hot surfaces. The heat exchanger is hot and it can result in personnel injury.

WARNING! **Risk of eye injuries!**
Use eye protection.

WARNING! **Risk of burns!**
Use protection gloves.

Make sure to wash carefully with water if the heat exchanger and the cover panels are cleaned with lye or acid based foam.

Remaining foam cleaning detergents might act corrosive.

Cleaning the heat exchanger

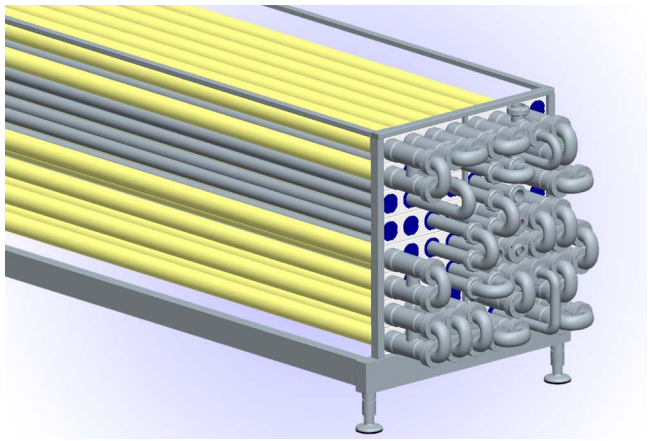

2.2tf506214.en

Note! Follow cleaning detergent instructions from the actual detergent producer.

Mount Cover Panels

WARNING! **Crushing hazards!**
Moving heavy loads.

WARNING! **Hot surfaces!**
The heat exchanger is hot and it can result in personnel injury.

WARNING! **Sharp edges!**
Protective gloves should be used when handling protective panels. Damaged plastic end pieces shall be replaced.

a) Mount the top cover panels [1] by lowering them straight down.

b) Mount the side cover panels [2] by pushing them straight in and let them fall down in position. Start with the lower panels.

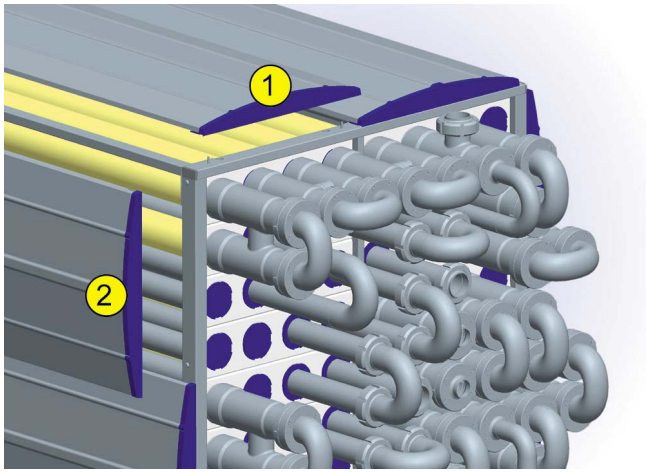

1 Top cover panels
2 Side cover panels

2.2tf506214.en

Cleaning - CIP

General

Caution! **Risk of machine damage.**
Never use mechanical cleaning. Mechanical cleaning will damage the equipment.

To ensure that the heat exchanger unit remains in good condition and to avoid infection of the product it is vital that the equipment is cleaned regularly.

The heat exchanger is designed to be Cleaned In Place (CIP).

Cleaning the Product Path

The product path of the heat exchanger system should normally be cleaned with lye and/or acid immediately after a production cycle.

Cleaning Flow Rate

The minimum recommended velocity of the cleaning fluid is 1.5 m/s (5 feet/s). An increased cleaning flow rate may be necessary under certain circumstances, for example in heat exchanger systems used for products that have a tendency to burn on, such as milk, protein and sugar products or products containing a high percentage of fibres.

(Cont'd)

2.2tf506214.en

(Cont'd)

Cleaning Agents

The following cleaning agents are recommended by Tetra Pak:

- NaOH
  A solution of 1-2% by weight of NaOH at a maximum temperature of 70°C. A 1% by weight solution is achieved if 1 kg of caustic soda is dissolved in 100 litres of water or if 2.2 litres of 33% NaOH solution is mixed in 100 litres of water.
- HNO_3
  A solution of 0.5% by weight of HNO3 at a maximum temperature of 70°C. A 0.5% by weight solution is achieved if 0.7 litres of 53% (36° Be) nitric acid is mixed in 100 litres of water.

Note! Hydrochloric acid and sulphuric acid are not allowed to be used.

In exceptionally severe cases such as milk UHT plants, it is permissible to exceed the concentrations/temperatures specified above. However the cleaning recommendations offered by Tetra Pak for the specific duty should always be observed.

Other Detergents

In addition to caustic soda and nitric acid, detergents containing wetting and complex-forming agents may be used also. However the maximum concentrations of caustic soda and nitric acid stipulated above must be observed.

Detergents should be dosed gradually in order to avoid excessive local and temporary concentrations.

Note! Hazardous agents must be handled according to local demands.

Cleaning water

Water used for cleaning and sterilization must comply with the attached requirements.

(Cont'd)

2.2tf506214.en

(Cont'd)

CIP cycles

Typical CIP cycles are shown in the table below, where all times are given in minutes.

Cycle	High-Protein Products			Low-Protein Products			
	Cooler	Cooler/ Heat	Heater	High Content of Insolubles		Low Content of Insolubles	
	Daily	Weekly	Daily	Daily	Weekly	Daily	Weekly
Rinse	-	-	5	-	-	-	-
Acid	-	-	15	-	-	-	-
Rinse	5	5	5	10	10	5	5
Lye	20	20	20	30	30	15	15
Rinse	10	10	5	10	5	10	5
Acid	-	15	15	-	15	-	15
Rinse	-	5	10	-	10	-	10
Stop	STOP	STOP	STOP	STOP	STOP	STOP	STOP
Sterilize	10	10	10	10	10	10	10

Note! Before starting a CIP cycle, make sure that no service medium remains in the heat exchanger unit. If necessary drain the units or, if the medium is steam, open a pressure relief valve.

2.2tf506214.en

CIP Flow Rates

Recommended minimum flow rates for the CIP cycles are shown in the table below. The flows rates are based on a flow velocity of 1.5 m/s.

The pressure drop given is the pressure drop over one tube module.

Type of module	Flow (l/h)	Pressure drop (kPa)				Flow (US gall/ min)	Pressure drop (psi)			
		Corrugated		Smooth			Corrugated		Smooth	
		3 m	6 m	3 m	6 m		3 m	6 m	3 m	6 m
CD 25/1*12	417	-	-	9	18	1.84	-	-	1.3	2.6
CD 29/1*16	859	17	33	6	11	3.78	2.4	4.7	0.8	1.6
CD 38/1*16	859	17	33	6	11	3.78	2.4	4.7	0.8	1.6
CD 38/1*20	1340	12	23	5	9	5.90	1.6	3.2	0.6	1.3
CD 70/1*38	5250	6	12	3	5	23.12	0.87	1.74	0.44	0.73
CD 85/1*51	9800	4	8	2	4	43.15	0.58	1.16	0.29	0.58
CD 108/1*64	15100	3	6	2	4	66.48	0.44	0.87	0.29	0.58
CD 129/1*76	22000	3	5	2	3	96.87	0.44	0.73	0.29	0.44
CD 154/1*101	40300	2	4	2	3	177.43	0.29	0.58	0.29	0.44
CM 70/4*16	3437	16	32	6	11	15.13	2.32	4.64	0.87	1.60
CM 70/7*16	6015	16	32	6	11	26.48	2.33	4.65	0.88	1.61
CM 70/4*20	5500	13	25	4	8	24.22	1.89	3.63	0.58	1.16
CM 85/7*16	6015	16	32	6	11	26.48	2.32	4.64	0.87	1.60
CM 85/12*16	10300	16	32	6	11	45.35	2.32	4.64	0.87	1.60
CM 85/7*20	9400	16	32	6	11	41.38	1.89	3.63	0.58	1.16
CM 85/4*25	8500	10	20	4	7	37.42	1.45	2.90	0.58	1.02
CM 108/12*16	10300	16	32	6	11	45.35	2.32	4.64	0.87	1.60
CM 108/19*16	16325	16	32	6	11	71.88	2.32	4.64	0.87	1.60
CM 108/7*25	14900	10	20	4	7	65.60	1.45	2.90	0.58	1.02
CM 129/19*16	16325	16	32	6	11	71.88	2.32	4.64	0.87	1.60
CM 129/27*16	23200	16	32	6	11	102.15	2.32	4.64	0.87	1.60
CM 129/19*20	25600	13	25	4	8	112.72	1.89	3.63	0.58	1.16
CM 129/12*25	25400	10	19	3	6	111.83	1.40	2.80	0.50	0.90
CM 154/37*16	31800	16	32	6	11	140.00	2.32	4.64	0.87	1.60
CM 154/19*25	40300	10	20	4	7	177.43	1.45	2.90	0.58	1.02
CMP 85/4*20	5500	13	25	4	8	24.22	1.82	3.63	0.58	1.16
CMP 108/7*20	9400	13	25	4	8	41.38	1.89	3.63	0.58	1.16
CMP 108/4*25	8500	10	20	4	7	37.42	1.45	2.90	0.58	1.02
CMP 129/7*25	14900	10	20	4	7	65.60	1.45	2.90	0.58	1.02
CMP 129/4*38	21100	6	12	3	5	92.90	0.87	1.74	0.44	0.73
CMP 154/19*20	25600	13	25	4	8	112.72	1.89	3.63	0.58	1.16
CMP 154/7*38	36800	6	12	3	5	162.03	0.87	1.74	0.44	0.73

2.2tf506214.en

Type of module		Flow (l/h)	Pressure drop (kPa)		Flow (US gall/min)	Pressure drop (psi)	
			Corrugated			Corrugated	
			3 m	6 m		3 m	6 m
CMRF 70/7*16C	Tubeside	6100	-	34	26.86	-	4.9
	Shellside	10700	-	22	47.12	-	3.2
CMRF 85/7*20C	Tubeside	9400	-	23	41.39	-	3.3
	Shellside	15600	-	14	68.68	-	2.0
CMRF 85/12*15C	Tubeside	9000	-	36	39.62	-	5.2
	Shellside	16800	-	21	73.97	-	3.0
CMRF 108/7*25C	Tubeside	14800	-	19	65.16	-	2.8
	Shellside	26800	-	13	118.00	-	1.8
CMRF 108/19*15C	Tubeside	14200	-	34	62.52	-	4.9
	Shellside	27200	-	18	119.76	-	2.5
CMRF 129/19*19C	Tubeside	23000	-	24	101.27	-	3.5
	Shellside	36500	-	14	160.70	-	2.0
CMR 70/7*16C	Tubeside	6100	17	34	26.86	2.5	4.9
	Shellside	10700	11	22	47.12	1.6	3.2
CMR 85/7*20C	Tubeside	9400	12	23	41.39	1.7	3.3
	Shellside	15600	7	14	68.68	1.0	2.0
CMR 108/19*16C	Tubeside	16300	16	31	71.77	2.3	4.5
	Shellside	24600	11	21	108.31	1.6	3.0
CMR 108/7*25C	Tubeside	14800	10	-	63.38	1.4	-
	Shellside	26800	7	-	118.00	1.0	-
CMR 129/19*20C	Tubeside	25600	11	22	112.71	1.6	3.2
	Shellside	36500	-	14	160.70	-	2.0
CMR 154/19*25C	Tubeside	40300	10	19	177.43	1.4	2.8
	Shellside	44000	9	18	193.73	1.3	2.6

2.2tf506214.en

Type of module	Flow (l/h)	Pressure drop (kPa)	Flow (US gall/min)	Pressure drop (psi)
		Smooth		Smooth
		6 m		6 m
CC108W	16400	7	72.20	1
CC108N	7800	20	34.35	2.8
CC70W	7400	10	32.58	1.8
CC70N	4400	20	19.37	2.8

Spare Parts

Tetra Spiraflo C

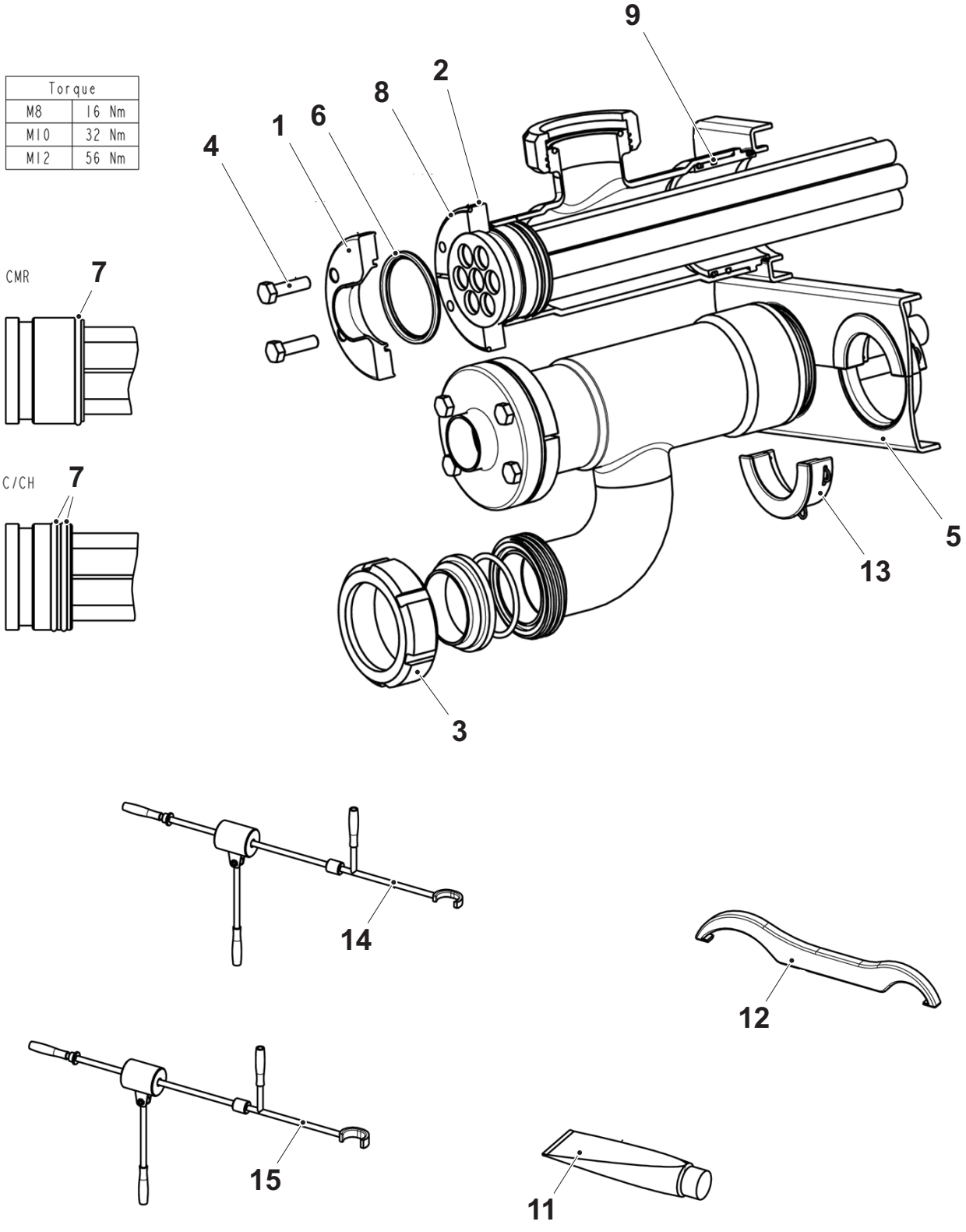

1.0ff506215.en

Spare parts Tetra Spiraflo C70			
Spare parts Article No.	**Description**	**Pos.**	**Qty**
6-0164760101	Flange CM70 Ø38x1.5, Multitube	1	
6-0164760103	Flange CM70 Ø38x1.6 SMO, Multitube		
6-0164760104	Flange CHM70 Ø38x1.5, Multitube		
6-0164760106	Flange CHM70 Ø38x1.6 SMO, Multitube		
6-0164760201	Flange CD70 Ø38x1.5, Monotube		
6-0164760202	Flange CD70 Ø38x1.6 SMO, Monotube		
6-0164760203	Flange CHD70 Ø38x1.5, Monotube		
6-0164760205	Flange CHD70 Ø38x1.6 SMO, Monotube		
6-0164760001	Split ring C70	2	
6-0164760002	Split ring CH70		
6-0164818801	Split ring CMRF70		
6-0099035338	O-ring 50.39x3.53, EPDM-FDA	3	
6-19061600	Nut SMS-51		
6-9613409409	Liner LKM 51 316		
6-0099030912	M10x30, High-pressure Flanges	4	
6-0099030914	M8x30, Flanges		
6-0099030915	M8x35, Ellipsoidal Bend		
6-0164832401	Support C70	5	
6-0164009905	Molykote SR Grease	11	
6-0164833413	Blind C70	13	
6-0164837701	Tube support with Spring C70/40		
6-0164837702	Tube support with Spring C70/53		
6-0164839901	Slide hammer C70 single, Shell connection	14	
6-0164839902	Slide hammer C70 double, Shell interconnection	15	

1.0tf506215.en

Service parts Tetra Spiraflo CM70, CMP70, CHM70				
Spare parts Article No.	**Description**	**Option.**	**Pos.**	**Qty**
6-0164637001	Seal ring, EPMD (F)		6	2
6-0164817201	Seal ring PTFE CM70	X		
6-0099035733	O-ring 56.74x3.53, FKM		7	4
6-0099032234	O-ring 88.49x3.53, EPDM		8	2
6-0099035718	O-ring 69.44x3.53, FKM		9	4

(quantity stated is for service of one tube/module)

Service parts Tetra Spiraflo CMR70, CMRF70, CHMR70				
Spare parts Article No.	**Description**	**Option.**	**Pos.**	**Qty**
6-0164637001	Seal ring, EPMD (F)		6	2
6-0164817201	Seal ring PTFE CM70	X		
6-0099035333	O-ring 56.74x3.53, EPDM-FDA, CMR		7	2
6-0099032234	O-ring 88.49x3.53, EPDM		8	2
6-0099035718	O-ring 69.44x3.53, FKM		9	4

(quantity stated is for service of one tube/module)

1.0ff506215.en

Service parts Tetra Spiraflo CD70, CHD70				
Spare parts Article No.	**Description**	**Option.**	**Pos.**	**Qty**
6-9612402632	Seal ring Ø38, EPDM		6	2
6-9612402652	Seal ring Ø38, Vilton	X		2
6-0099035733	O-ring 56.74x3.53, FKM		7	4
6-0099032234	O-ring 88.49x3.53, EPDM		8	2
6-0099035718	O-ring 69.44x3.53, FKM		9	4

(quantity stated is for service of one tube/module)

Spare parts Tetra Spiraflo C85			
Spare parts Article No.	**Description**	**Pos.**	**Qty**
6-0164761201	Flange CM85 Ø51x1.5, Multitube	1	
6-0164761203	Flange CM85 Ø51x1.6 SMO, Multitube		
6-0164761204	Flange CHM85 Ø51x1.5, Multitube		
6-0164761206	Flange CHM85 Ø51x1.6 SMO, Multitube		
6-0164761101	Flange CD85 Ø51x1.5, Monotube		
6-0164761103	Flange CD85 Ø51x1.6 SMO, Monotube		
6-0164761104	Flange CHD85 Ø51x1.5, Monotube		
6-0164760003	Split ring C85	2	
6-0164760004	Split ring CH85		
6-0164818802	Split ring CMRF85		
6-0099035374	O-ring 75.57x5.33, EPDM-FDA	3	
6-19061800	Nut SMS-76		
6-9613409411	Liner LKM 76 316		
6-0099030912	M10x30, Flanges	4	
6-0099030913	M10x40, Ellipsoidal bend		
6-0164832402	Support C85	5	
6-0164009905	Molykote SR Grease	11	
6-0164833414	Blind C85	13	
6-0164837703	Tube support with Spring C85/53		
6-0164837704	Tube support with Spring C85/65		
6-0164839903	Slide hammer C85 single, Shell connection	14	
6-0164839904	Slide hammer C85 double, Shell interconnection	15	

1.0tf506215.en

Service parts Tetra Spiraflo CM85, CMP85, CHM85				
Spare parts Article No.	**Description**	**Option.**	**Pos.**	**Qty**
6-0164651201	Seal ring CM85, EPDM		6	2
6-0164817202	Seal ring CM85, PTFE	X		
6-0099035718	O-ring 69.44x3.53, FKM		7	4
6-0099032224	O-ring 107.54x3.53, EPDM		8	2
6-0099035720	O-ring 82.14x3.53, FKM		9	4

(quantity stated is for service of one tube/module)

Service parts Tetra Spiraflo CM85, CMP85, CHM85				
Spare parts Article No.	**Description**	**Option.**	**Pos.**	**Qty**
6-0164651201	Seal ring CM85, EPDM		6	2
6-0164817202	Seal ring CM85, PTFE	X		
6-0099035318	O-ring 69.44x3.53, EPDM-FDA, CMR		7	2
6-0099032224	O-ring 107.54x3.53, EPDM		8	2
6-0099035320	O-ring 82.14x3.53, EPDM-FDA, CMR		9	4

(quantity stated is for service of one tube/module)

1.0ff506215.en

Service parts Tetra Spiraflo CD85, CHD85				
Spare parts Article No.	**Description**	**Option.**	**Pos.**	**Qty**
6-9612402633	Seal ring Ø51, CM85, EPDM		6	2
6-9612402653	Seal ring Ø51, CM85, PTFE	X		
6-0099035718	O-ring 69.44x3.53, FKM		7	4
6-0099032224	O-ring 107.54x3.53, EPDM		8	2
6-0099035720	O-ring 82.14x3.53, FKM		9	4

(quantity stated is for service of one tube/module)

Spare parts Tetra Spiraflo C108			
Spare parts Article No.	**Description**	**Pos.**	**Qty**
6-0164761401	Flange CM108 Ø63.5x1.6, Multitube	1	
6-0164761402	Flange CM108 Ø63.5x1.6 SMO, Multitube		
6-0164761403	Flange CHM108 Ø63.5x1.6, Multitube		
6-0164761404	Flange CHM108 Ø63.5x1.6 SMO, Multitube		
6-0164761501	Flange CD108 Ø63.5x1.6, Monotube		
6-0164761502	Flange CHD108 Ø63.5x1.6, Monotube		
6-0164760005	Split ring C108	2	
6-0164760006	Split ring CH108		
6-0164818803	Split ring CMRF108		
6-0099035374	O-ring 75.57x5.33, EPDM-FDA	3	
6-19061800	Nut SMS-76		
6-9613409411	Liner LKM 76 316		
6-0099030913	M10x40, Ellipsoidal bend	4	
6-0099030916	M10x35, Flanges		
6-0164832403	Support C108	5	
6-0164009905	Molykote SR Grease	11	
6-0164833415	Blind C108	13	
6-0164837705	Tube support with Spring C108/53		
6-0164837706	Tube support with Spring C108/65		
6-0164837707	Tube support with Spring C108/78		
6-0164839905	Slide hammer C108 single, Shell connection	14	
6-0164839906	Slide hammer C108 double, Shell interconnection	15	

1.0tf506215.en

Service parts Tetra Spiraflo CM108, CMP108, CHM108				
Spare parts Article No.	**Description**	**Option.**	**Pos.**	**Qty**
6-0164637101	Seal ring CM108, EPDM		6	2
6-0164817203	Seal ring, CM108, PTFE	X		
6-0099035721	O-ring 91.67x3.53		7	4
6-0099032241	O-ring 120.24x3.53		8	2
6-0099035744	O-ring 104.37x3.53		9	4

(quantity stated is for service of one tube/module)

Service parts Tetra Spiraflo CM108, CMP108, CHM108				
Spare parts Article No.	**Description**	**Option.**	**Pos.**	**Qty**
6-0164637101	Seal ring, CM108, EPDM-FDA		6	2
6-0164817203	Seal ring, CM108, PTFE	X		
6-0099035321	O-ring 91.67x3.53, EPDM-FDA, CMR		7	2
6-0099032241	O-ring 120.24x3.53, EPDM		8	2
6-0099035344	O-ring 104.37x3.53, EPDM-FDA, CMR		9	2

(quantity stated is for service of one tube/module)

1.0ff506215.en

Service parts Tetra Spiraflo CM108, CMP108, CHM108				
Spare parts Article No.	**Description**	**Option.**	**Pos.**	**Qty**
6-9612402634	Seal ring Ø63.5, EPDM		6	2
6-9612402654	Seal ring Ø63.5, Vilton	X		
6-0099035721	O-ring 91.67x3.53, FKM		7	4
6-0099032241	O-ring 120.24x3.53, EPDM		8	2
6-0099035744	O-ring 104.37x3.53, FKM		9	4

(quantity stated is for service of one tube/module)

Spare parts Tetra Spiraflo C129			
Spare parts Article No.	**Description**	**Pos.**	**Qty**
6-0164772401	Flange CM129 Ø76.1x1.6, Multitube	1	
6-0164772402	Flange CHM129 Ø76.1x1.6, Multitube		
6-0164772403	Flange CM129 Ø76.1x1.6 SMO, Multitube		
6-0164772501	Flange CD129 Ø76.1x1.6, Monotube		
6-0164760009	Split ring C129	2	
6-0099035377	O-ring 104.14x5.33	3	
6-9612928294	Nut SMS-104		
6-9613409412	Liner LKM 104 316		
6-0099030918	M12x40	4	
6-0164832404	Support C129	5	
6-0164009905	Molykote SR Grease	11	
6-0164833416	Blind C129	13	
6-0164837708	Tube support with Spring C129/78		
6-0164837709	Tube support with Spring C129/106		
6-0164839909	Slide hammer C129 single, Shell connection	14	
6-0164839907	Slide hammer C129 double, Shell interconnection	15	

1.0tf506215.en

Service parts Tetra Spiraflo CM129, CMP129, CHM129				
Spare parts Article No.	**Description**	**Option.**	**Pos.**	**Qty**
6-0164673701	Seal ring CM129, EPDM		6	2
6-0164817204	Seal ring CM129, PTFE	X		
6-0099035724	O-ring 107.54x3.53, FKM		7	4
6-0099032228	O-ring 151.99x3.53, EPDM	X	8	2
6-0099035726	O-ring 126.59x3.53, FKM		9	4

(quantity stated is for service of one tube/module)

Service parts Tetra Spiraflo CMR129, CHMR129				
Spare parts Article No.	**Description**	**Option.**	**Pos.**	**Qty**
6-0164673701	Seal ring CM129, EPDM		6	2
6-0164817204	Seal ring, CM129, PTFE	X		
6-0099035324	O-ring 107.54x3.53, EPDM-FDA, CMR		7	2
6-0099032228	O-ring 151.99x3.53, EPDM	X	8	2
6-0099035326	O-ring 126.59x3.53, EPDM-FDA		9	2

(quantity stated is for service of one tube/module)

1.0ff506215.en

Service parts, Tetra Spiraflo CD129, CHD129				
Spare parts Article No.	**Description**	**Option.**	**Pos.**	**Qty**
6-9612402635	Seal ring Ø76, EPDM		6	2
6-9612402655	Seal ring Ø76, Viton	X		
6-0099035724	O-ring 107.54x3.53, FKM		7	4
6-0099032228	O-ring 151.99x3.53	X	8	2
6-0099035726	O-ring 126.59x3.53, FKM		9	4

(quantity stated is for service of one tube/module)

Spare parts Tetra Spiraflo C154			
Spare parts Article No.	**Description**	**Pos.**	**Qty**
6-0164776601	Flange CM154 Ø104.2x2, Multitube	1	
6-0164776603	Flange CM154 Ø76.1x1.6 multi SMO, Multitube		
6-0164776701	Flange CD154 Ø104.2x2, Monotube		
6-0164760010	Split ring C154	2	
6-0099035377	O-ring 104.14x5.33, EPDM-FDA	3	
6-9612928294	Nut SMS-104		
6-9613409412	Liner LKM 104 316		
6-0099030918	M12x40	4	
6-0164832405	Support C154	5	
6-0164009905	Molykote SR Grease	11	
6-0164833417	Blind C154	13	
6-0164837710	Tube support with Spring C154/78		
6-0164837711	Tube support with Spring C154/106		
6-0164839908	Slide hammer C154 single, Shell connection	14	
6-0164839909	Slide hammer C154 double, Shell interconnection	15	

1.0tf506215.en

Service parts Tetra Spiraflo CM154, CMP154, CHM154				
Spare parts Article No.	**Description**	**Option.**	**Pos.**	**Qty**
6-0164666101	Seal ring CM154, EPDM-FDA		6	2
6-0164817205	Seal ring, CM154, PTFE	X		
6-0099035727	O-ring 132.94x3.53, FKM		7	4
6-0099032229	O-ring 164.69x3.53, EPDM		8	2
6-0099035728	O-ring 151.99x3.53, FKM		9	4

(quantity stated is for service of one tube/module)

Service parts Tetra Spiraflo CMR154, CHMR154				
Spare parts Article No.	**Description**	**Option.**	**Pos.**	**Qty**
6-0164666101	Seal ring CM154, EPDM-FDA		6	2
6-0164817205	Seal ring, CM154, PTFE	X		
6-0099035327	O-ring 132.94x3.53, EPDM-FDA		7	2
6-0099032229	O-ring 164.69x3.53, EPDM		8	2
6-0099035328	O-ring 151.99x3.53, EPDM-FDA		9	2

(quantity stated is for service of one tube/module)

1.0ff506215.en

Service parts Tetra Spiraflo CD154, CHD154				
Spare parts Article No.	**Description**	**Option.**	**Pos.**	**Qty**
6-9612402607	Seal ring NW100, EPDM		6	2
6-9612402627	Seal ring NW100, Viton	X		
6-0099035727	O-ring 132.94x3.53, FKM		7	4
6-0099032229	O-ring 164.69x3.53, EPDM		8	2
6-0099035728	O-ring 151.99x3.53, FKM		9	4

(quantity stated is for service of one tube/module)

Tetra Spiraflo C25/C29/C38

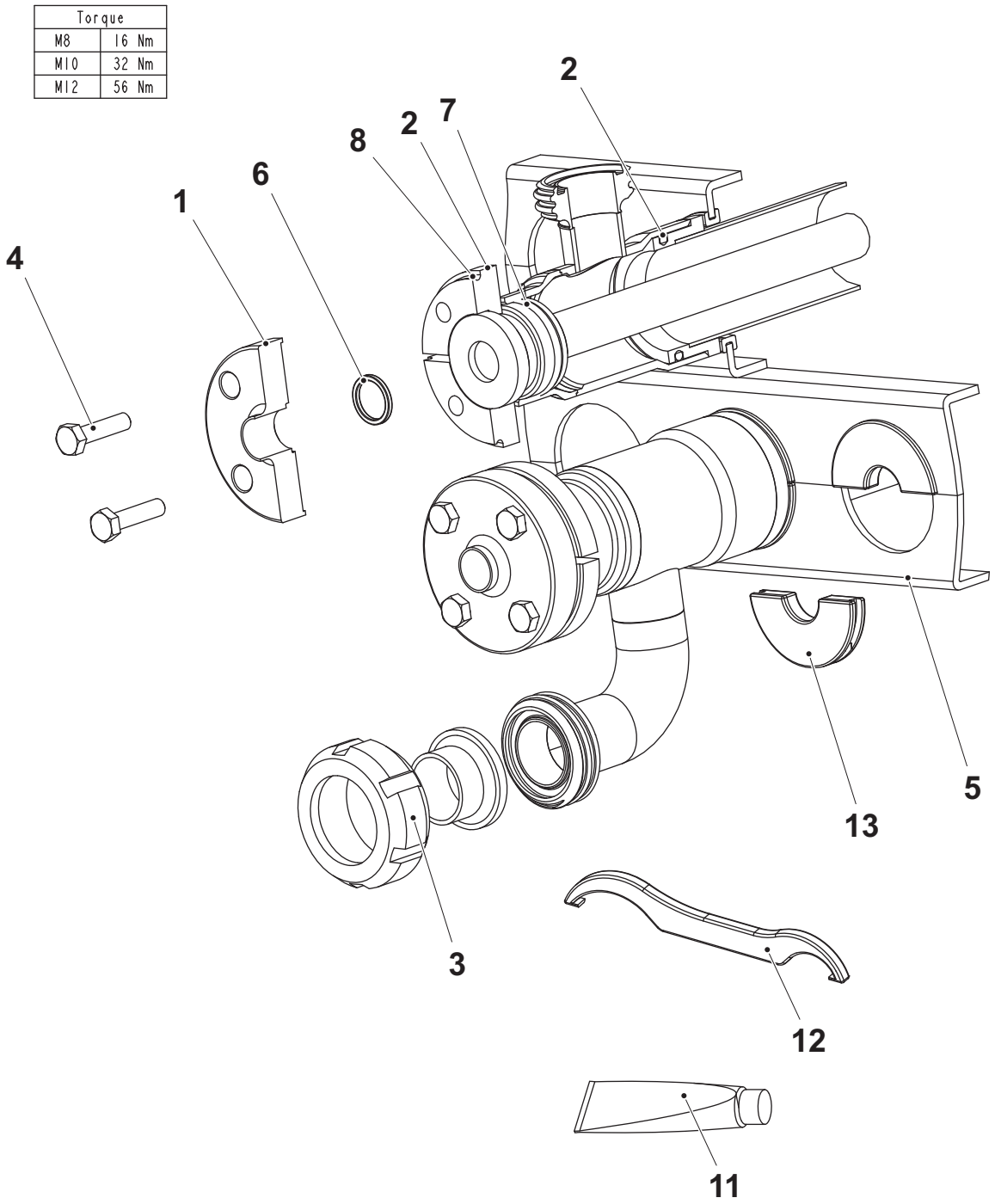

1.0tf506215.en

Spare parts Tetra Spiraflo C25/C29/C38			
Spare parts Article No.	**Description**	**Pos.**	**Qty**
6-0164881401	Flange Ø16	1	
6-0164881402	Flange Ø20		
6-0164881701	Split ring C25	2	
6-0164881702	Split ring C29		
6-0164881703	Split ring C38		
6-3131703753	O-ring EPDM	3	
6-9611309611	Nut Ø20		
6-001061300	Liner Ø25		
6-0099030917	M8x25	4	
6-0164880101	Shell support C25/29/38	5	
6-0164009905	Molykote SR Grease	11	
6-6969600	Spanner SMS 25-76	12	
6-0164880201	Tube support Blind	13	
6-0164880202	Tube support HC Ø16		
6-0164880203	Tube support HC Ø20		
6-0164880204	Tube support shell Ø25		
6-0164880205	Tube support shell Ø29		
6-0164880206	Tube support shell Ø38		

1.0ff506215.en

Service parts Tetra Spiraflo C25/C29/C38				
Spare parts Article No.	**Description**	**Option.**	**Pos.**	**Qty**
6-0164874801	Quad ring 14.0x1.78, EPDM-FDA (Tube insert Ø16)		6	2
6-0164874802	Quad ring 18.77x1.78, EPDM-FDA (Tube insert Ø20)			2
6-0164784301	Seal ring, 17.3x3, EPMD (For C25)		7	2
6-0164784302	Seal ring, 27.2x3, EPMD (For C38)			2
6-0164784305	Seal ring, 19x3, EPMD (For C29)			2
6-0099032216	O-ring 53.57x3.53, EPDM		8	4
6-0099035343	O-ring 37.69x3.53, EPDM		9	2

(quantity stated is for service of one tube/module)

Tetra Spiraflo CC70

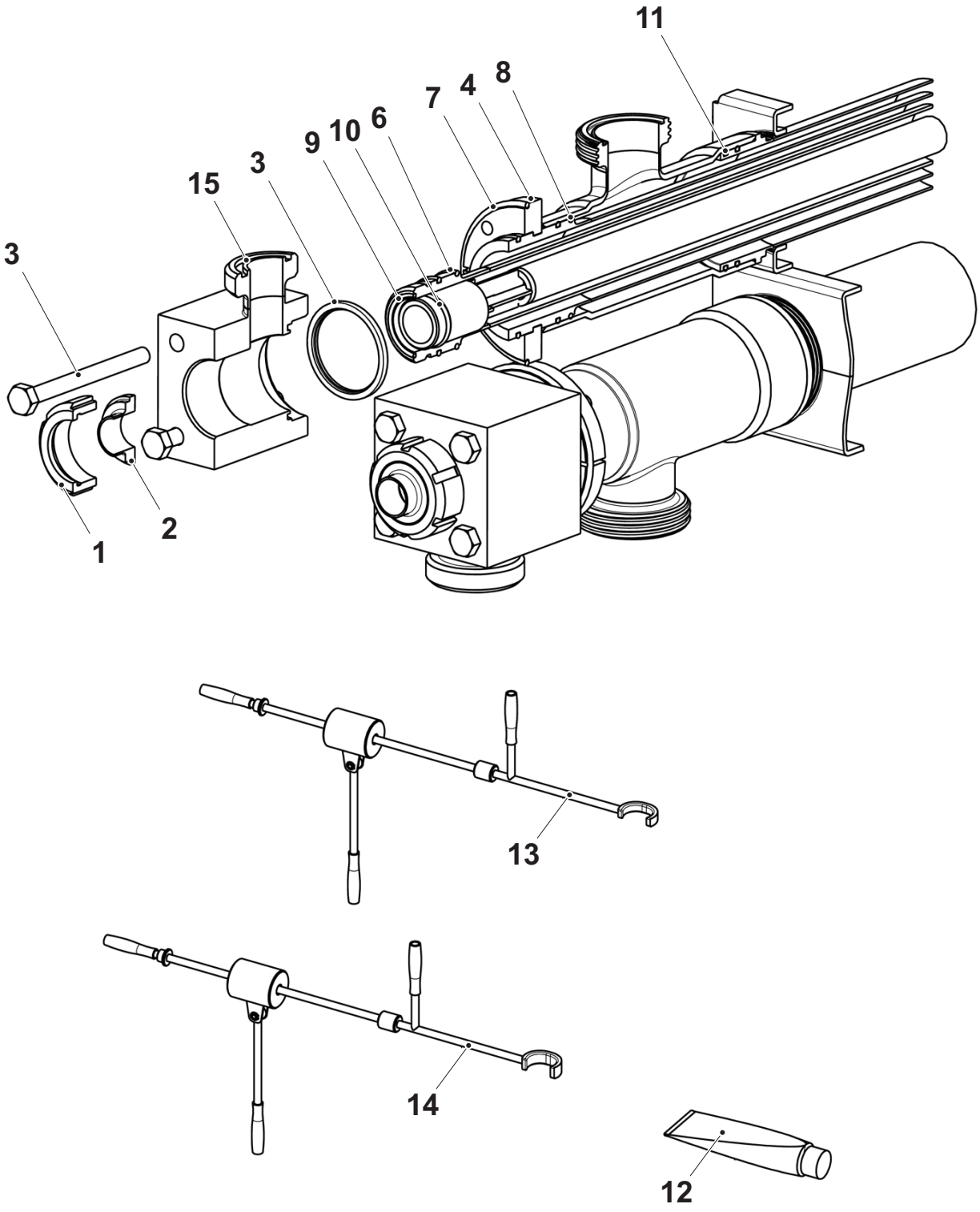

1.0tf5062215.en

Spare parts Tetra Spiraflo CC70			
Spare parts Article No.	**Description**	**Pos.**	**Qty**
6-99027617	SMS nut Ø32	1	
6-0164663501	Liner CC70	2	
6-0022104113	Screw M6S M10x110	3	
6-0164663601	Split ring CC70	4	
6-0164009905	Molykote SR Grease	12	
6-0164839901	Slide hammer C70 single, Shell connection	13	
6-0164839902	Slide hammer C70 double, Shell interconnection	14	
6-3131703772	Seal ring SMS 38/48x5.5	15a	
6-99027912	High-pressure Liner Ø38	15b	
6-99027612	High-pressure Nut Ø38	15c	

Service parts Tetra Spiraflo CC70			
Spare parts Article No.	**Description**	**Pos.**	**Qty**
6-0164826701	Seal ring CD85, EPDM	5	2
6-99035343	O-ring 37.69x3.53, EPDM	6	4
6-99032234	O-ring 88.49x3.53, EPDM	7	2
6-99035733	O-ring 56.74x3.53, EPDM	8	6
6-99026127	O-ring 36.17x2.62, FKM, CC70 Normal gap	9	
6-99026120	O-ring 25.07x2.62, FKM, CC70 Wide gap		2
6-99032210	O-ring 24.99x3.53, EPDM	10	
6-99035718	O-ring 69.44x3.53, FKM	11	

(quantity stated is for service of one tube/module)

1.0ff506215.en

Tetra Spiraflo CC108

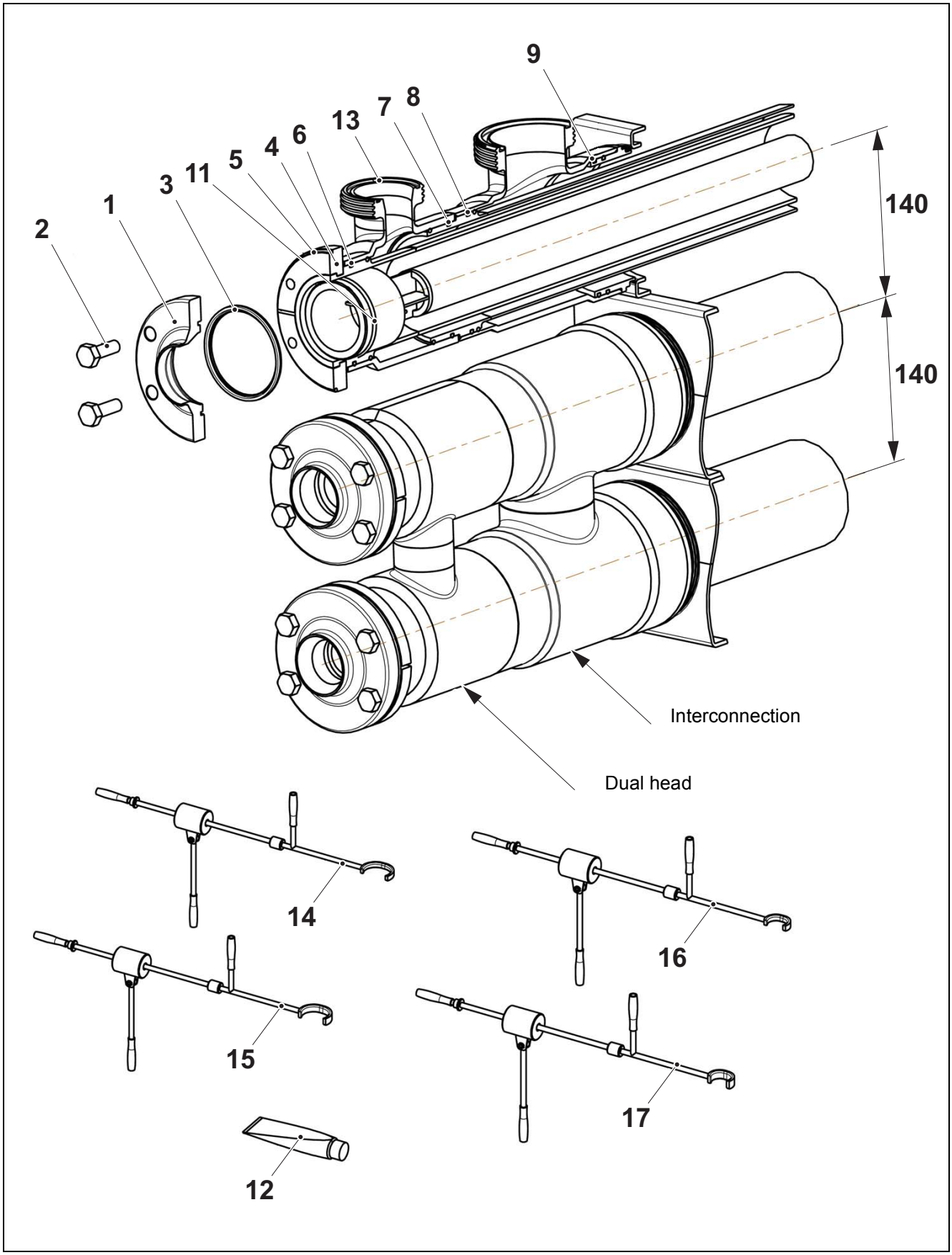

Spare parts Tetra Spiraflo CC108			
Spare parts Article No.	**Description**	**Pos.**	**Qty**
6-0164687401	Flange Ø51x1.5, Normal gap	1	
6-0164687402	Flange Ø51x1.5, Wide gap		
6-99030912	Screw M6S M10x30	2	
6-0164760003	Split ring C85	4	
6-0164009905	Molykote SR Grease	12	
6-99032216	O-ring 53.57x3.53, EPDM	13a	
6-99027913	High-pressure Liner Ø51	13b	
6-99032903	High-pressure Liner Ø51	13c	
6-99027613	High-pressure nut Ø51	13d	
6-0164839905	Slide hammer C108 single, Shell connection	14	
6-0164839906	Slide hammer C108 double, Shell interconnection	15	
6-0164839910	Slide hammer CC108 single, Single head	16	
6-0164839911	Slide hammer CC108 double, Dual head	17	

Service parts Tetra Spiraflo CC108			
Spare parts Article No.	**Description**	**Pos.**	**Qty**
6-0164651201	Seal ring CM85, EPDM-FDA	3	2
6-99032224	O-ring 107.54x3.53, EPDM	5	2
6-99035335	O-ring 75.79x3.53, EPDM	6	4
6-99035339	O-ring 85.32x3.53, EPDM	7	4
6-99035721	O-ring 91.67x3.53, FKM	8	4
6-99035744	O-ring 104.37x3.53, FKM	9	4
6-99032212	O-ring 34.52x3.53, EPDM, Normal gap	11	2
6-99032214	O-ring 40.87x3.53, EPDM, Wide gap		2

(quantity stated is for service of one tube/module)

1.0ff506215.en

Tetra Spiraflo CMRF

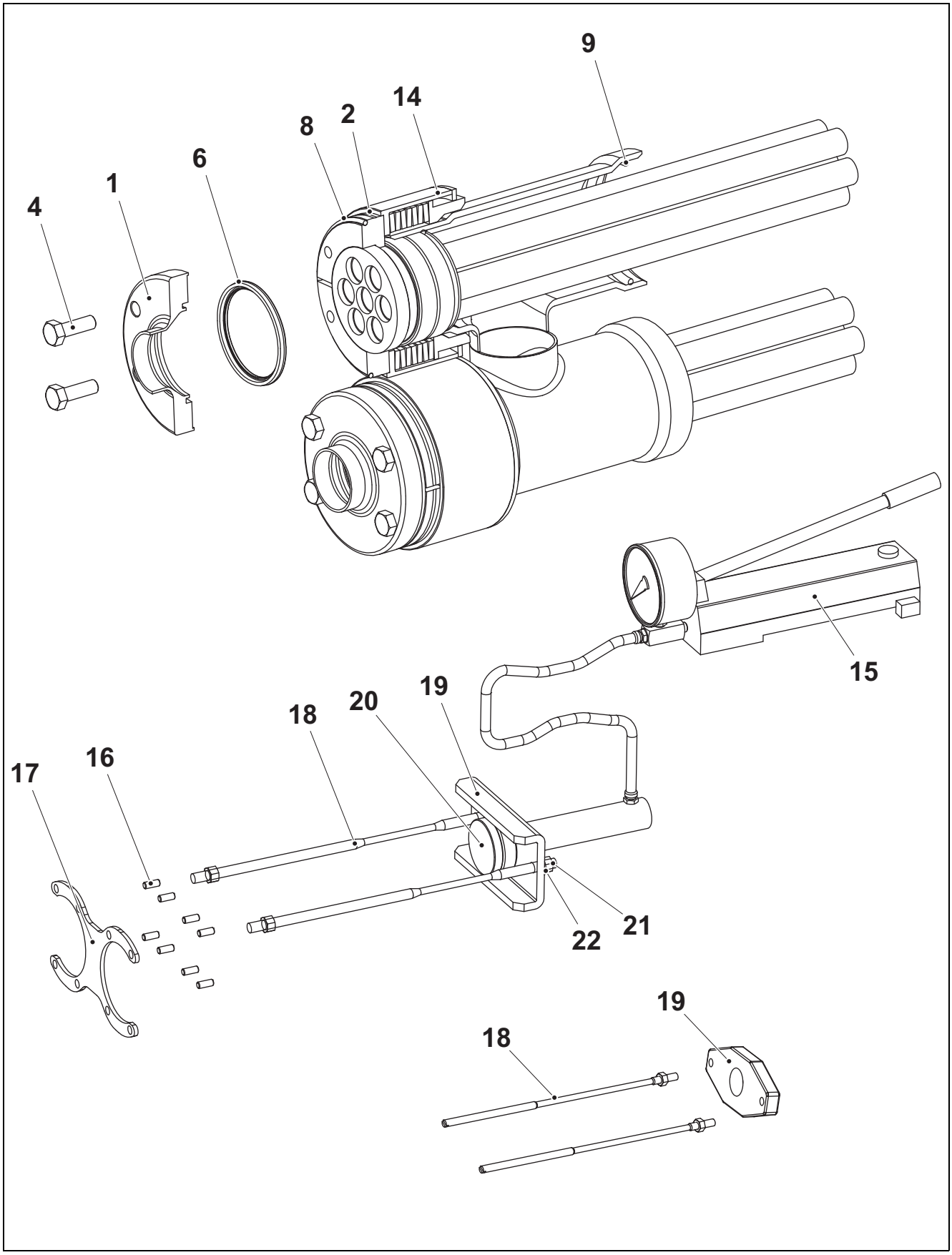

1.0tf506215.en

Spare parts Tetra Spiraflo CMRF			
Spare parts Article No.	**Description**	**Pos.**	**Qty**
6-0164818801	Split ring CMRF70	2	
6-0164818802	Split ring CMRF85		
6-0164818803	Split ring CMRF108		
6-0164818804	Split ring CMRF129		
6-0164824811	Spring Package CMRF 70	14	
6-0164824812	Spring Package CMRF 85		
6-0164824813	Spring Package CMRF 108 7x25		
6-0164889801	Spring Package CMRF 108 19x15		
6-0164895801	Spring Package CMRF 129 19x19		
6-0164819201	Compression Tool with Box CMRF 70/85/108	15	
6-0164819202	Compression Tool with Box CMRF 129		
312318-0451	Grub screw ISO 4029 M8X20	16	
6-0164750002	Guide Plate double, CMRF85	17	
6-0164815302	Guide Plate double, CMRF70		
6-0164824101	Guide Plate CMRF108		
6-0164896801	Guide Plate CMRF129		
6-0164826201	Shaft M10, CMRF 70,85	18	
6-0164826202	Shaft M10, CMRF 108		
6-0164826203	Shaft M12, CMRF 129 19x19		
6-0164815803	Yoke, CMRF-70	19	
6-0164815804	Yoke, CMRF-85		
6-0164815805	Yoke, CMRF-108 7x25		
6-0164877201	Yoke, CMRF-108 19x15		
6-0164896201	Yoke, CMRF-129 19x19		
6-0164815901	Push plate, CMRF -70	20	
6-0164815902	Push plate, CMRF -85, -108		
6-0164815903	Push plate, CMRF -129		
312605-0320	Hexagonal nut ISO 4032 M10	21	
6-99036302	Hexagonal nut M6HM M12x50		
6-22310721	Washer 10.5 ISO 7089	22	

1.0ff506215.en

Holding tube

Holding tube connections

DN	Liner type 316L P/N	Liner type 254 SMO P/N	Nut P/N	O-ring EPDM P/N
16	6-164734921	N/A	6-164784401	6-164874801
20	6-164734925	N/A	6-164784404	6-164874802
38	9613 4094-08	6-990355 32	190615	6-990353 43
51	9613 4094-09	6-990355 33	190616	6-990353 38
63.5	9613 4094-10	6-990355 34	190617	6-990353 73
76	9613 4094-11	6-990355 35	190618	6-990353 74
100	9613 4094-12	N/A	9612 9282-694	6-990353 77

Extended spanner for holding tube

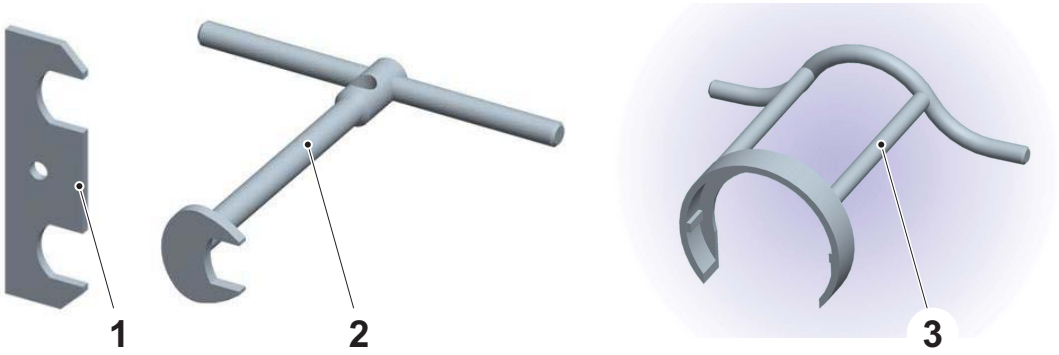

1.0tf506215.en

	DN	P/N	Pos
C25-C38	16	6-164 8822 01	1
		6-164 5859 01	2
	20	6-164 5920 01	1
		6-164 5934 01	2
C70-C154	38	6-164 8060 02	3
	51	6-164 8061 02	3
	63.5	6-164 8062 02	3
	76	6-164 8063 02	3
	100	6-164 8261 02	3

Grease

Grease

Type	P/N
Molycote SR Grease	6-164009905
Klüber Unisilikon L 250L	6-4722567601

This page intentionally left blank

1.0ff506215.en

Tetra Pak

Maintenance & Spare Parts

Centrifugal pump
(Alfa Laval Flow)
LKH 5 - 90 / LKHSP 10 - 40



1.0 1214246-0101.fro

Tetra Pak

Doc No. 1214246-0101

Centrifugal pump

LKH 5 - 90 / LKHSP 10 - 40

This document refers to components specified in Technical Manual, Maintenance & Spare Parts CD/DVD or on Tetra Pak Intranet.

1.0 1214246-0101.fro

Version 12 Issue 2015-10

Doc No. 1214246-0101

Tetra Pak

Tetra Pak Processing Systems AB

Maintenance 1

Change shaft seal. 1

Relubrication Intervals 12

Spare parts 13

Kit 13

Spare part kit 16

Service kit 28

Spare parts 39

LKHSP 39

Maintenance

Change shaft seal

DANGER!

Risk of electrical shock!
Risk of entanglement!
Always disconnect supply circuits prior to changing any parts.

WARNING!

Never service the pump when it is hot.
Never service the pump with pump and pipelines under pressure.
Always disconnect the power supply before servicing the pump.
Never run the pump with both the suction side and the pressure side blocked.
Never start in the wrong direction of rotation when there is liquid in the pump.
Never touch the pump or the pipelines when pumping hot liquids or when sterilizing.

Note! All scrap must be stored/disposed in accordance with current rules/ directives.

FSS: Only for pump with Flushed Shaft Seal.

DMS: Only for pump with Double Mechanical shaft Seal.

2.2tf502113.en

Disassemble

a) **LKH 5:** Remove the screw (18), spring washers (19), clamps (20) and pump casing (29).
b) **LKH 10 - 90:** Remove the cap nuts (31), washers (30), and pump casing (29).
c) **FSS** and **DMS:** Unscrew the tubes (3) using a spanner.
d) Remove screw (7) and safety guard (8).
e) Remove impeller screw (28), if fitted.
f) Remove impeller (25) or (26). If necessary, loosen the impeller by knocking gently on the impeller vanes.
g) Remove O-ring (27) from the impeller, if fitted.
h) Pull off O-ring (22) from the back plate (21).
i) Unscrew nuts (13) and remove washers (14) and the back plate (21).

(Cont'd)

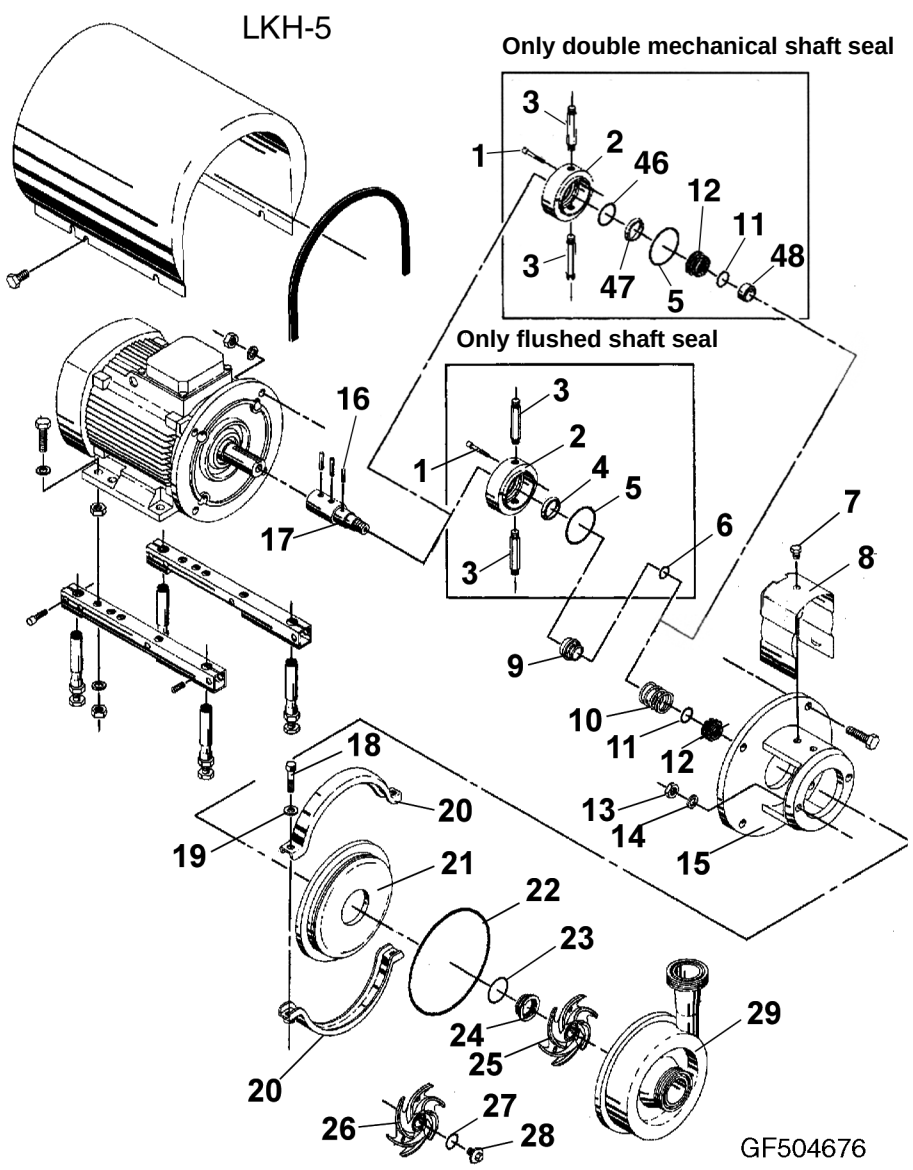

1 Screw
2 Seal housing
3 Tube
4 Lip seal
5 O-ring
6 O-ring
7 Screw
8 Safety guard
9 Drive ring
10 Spring
11 O-ring
12 Rotating seal ring
13 Nut
14 Washer
15 Adaptor
16 Connex pin
17 Stub shaft
18 Screw
19 Spring washer
20 Clamp
21 Back plate
22 O-ring
23 O-ring
24 Stationary seal ring
25 Impeller
26 Impeller for impeller screw
27 O-ring
28 Impeller screw
29 Pump casing
46 O-ring
47 Secondary stationary seal ring
48 Drive ring

2.2tf502113.en

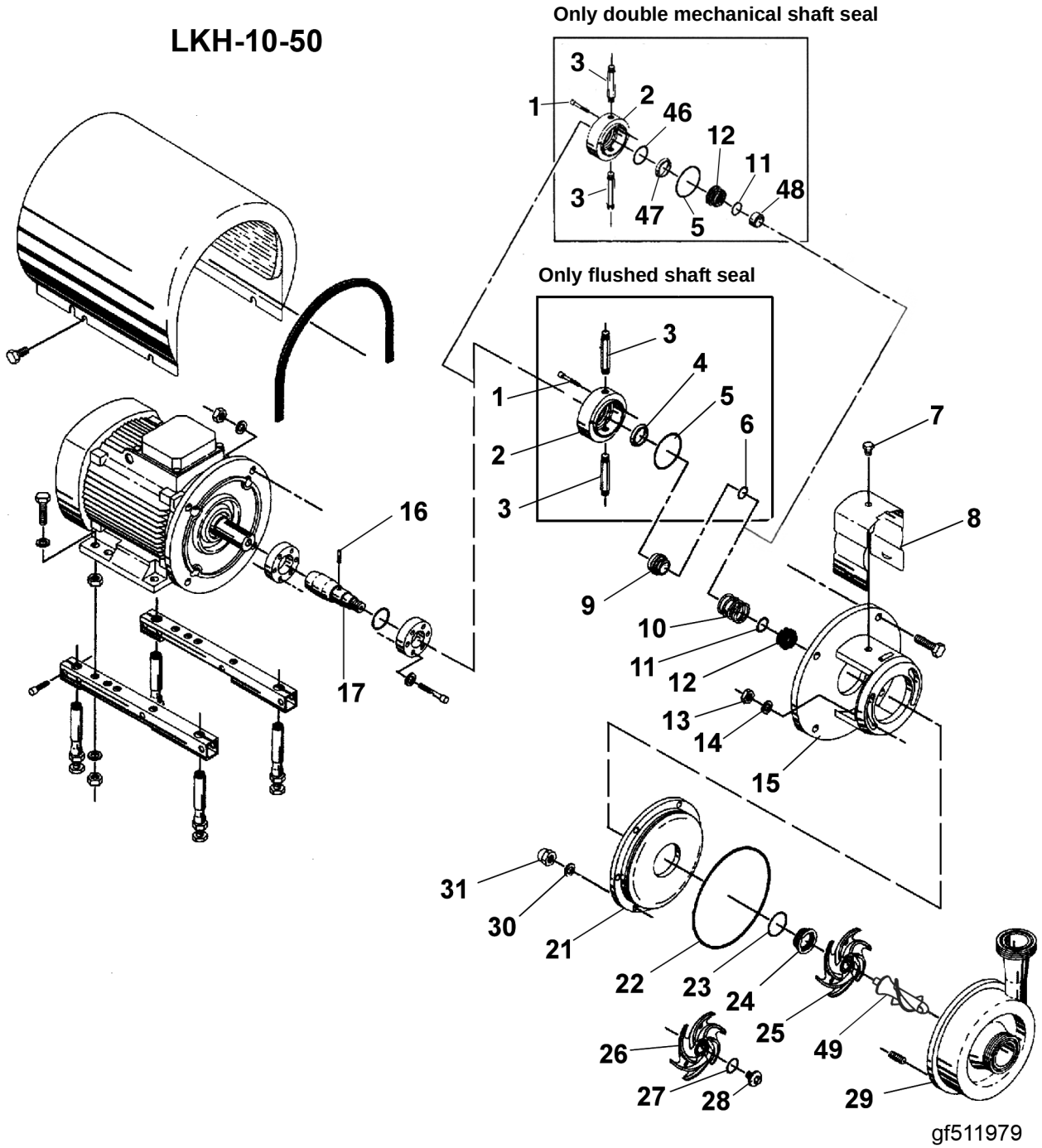

2.2tf502113.en

1	Screw	10	Spring	22	O-ring	30	Washer
2	Seal housing	11	O-ring	23	O-ring	31	Cap nut
3	Tube	12	Rotating seal ring	24	Stationary seal ring	46	O-ring
4	Lip seal	13	Nut	25	Impeller	47	Secondary stationary seal ring
5	O-ring	14	Washer	26	Impeller for impeller screw	48	Drive ring
6	O-ring	15	Adaptor	27	O-ring	49	Inducer
7	Screw	16	Connex pin	28	Impeller screw		
8	Safety guard	17	Stub shaft	29	Pump casing		
9	Drive ring	21	Back plate				

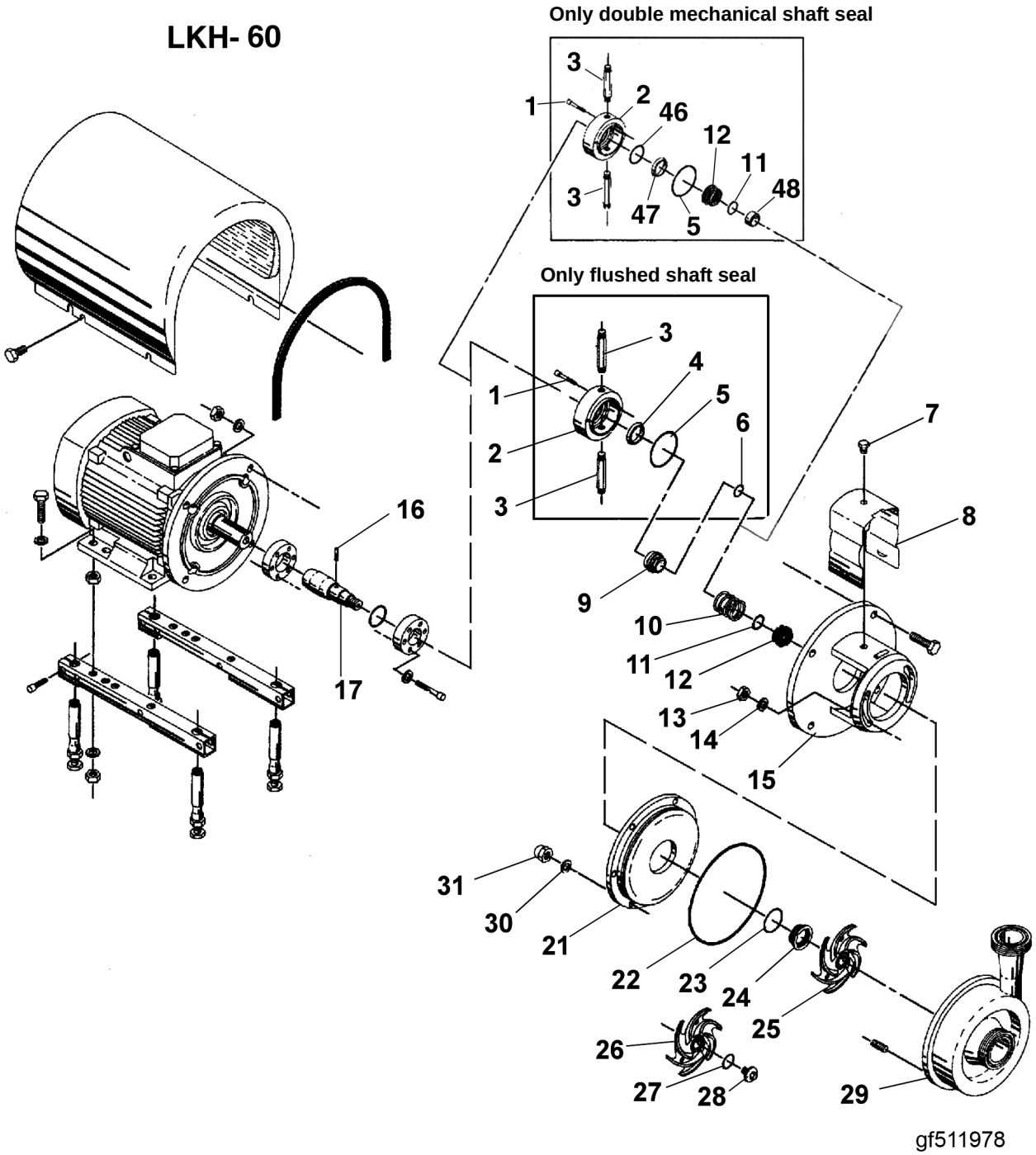

1	Screw	10	Spring	22	O-ring	30	Washer
2	Seal housing	11	O-ring	23	O-ring	31	Cap nut
3	Tube	12	Rotating seal ring	24	Stationary seal ring	46	O-ring
4	Lip seal	13	Nut	25	Impeller	47	Secondary stationary seal ring
5	O-ring	14	Washer	26	Impeller for impeller screw	48	Drive ring
6	O-ring	15	Adaptor	27	O-ring		
7	Screw	16	Connex pin	28	Impeller screw		
8	Safety guard	17	Stub shaft	29	Pump casing		
9	Drive ring	21	Back plate				

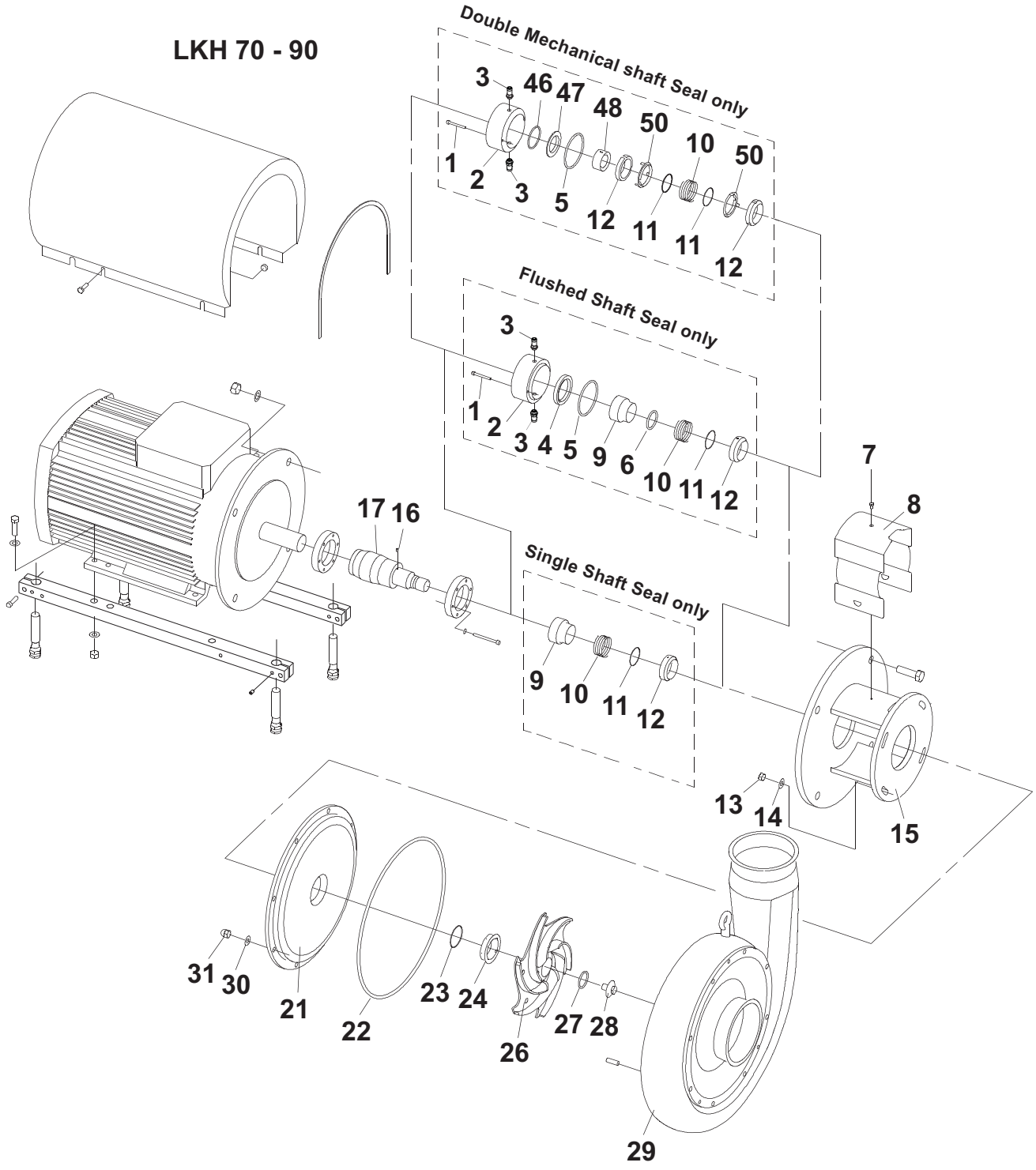

1	Screw	9	Drive ring	17	Stub shaft	29	Pump casing
2	Seal housing	10	Spring	21	Back plate	30	Washer
3	Tube	11	O-ring	22	O-ring	31	Cap nut
4	Lip seal	12	Rotating seal ring	23	O-ring	46	O-ring
5	O-ring	13	Nut	24	Stationary seal ring	47	Secondary stationary seal ring
6	O-ring	14	Washer	26	Impeller	48	Drive ring
7	Screw	15	Adaptor	27	O-ring	50	Cup
8	Safety guard	16	Connex pin	28	Impeller screw		

(Cont'd)

j) Remove stationary seal ring (24) (left-hand thread). Use special tool (6-9612-1371-01).

k) Remove O-ring (23) from back plate (21).

l) **FSS** and **DMS:** Remove screws (1) and seal housing (2).

m) **FSS:** Pull out lip seal (4) and O-ring (5) from the seal housing (2).

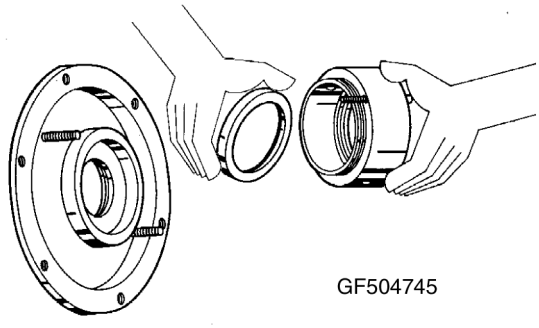

n) **DMS:** Remove rotating seal rings (12) and drive ring (48) from spring (10).

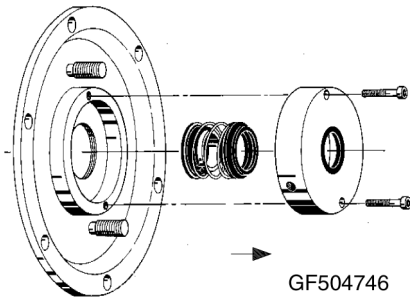

o) **DMS:** Remove O-rings (11) from rotating seal rings (12).

p) **DMS, LKH 70 - 90:** Remove cups (50) from rotating seal rings (12).

q) **DMS:** Remove stationary seal ring (47) from seal housing (2).

r) **DMS:** Remove O-ring (46) from stationary seal ring (47).

s) **DMS:** Remove O-ring (5) from seal housing (2).

t) Remove drive ring (9), spring (10), O-ring (11), rotating seal ring (12), and if **FSS** also O-ring (6) from stub shaft (17).

u) **LKH 10 - 90:** Remove spring (10), O-ring (11), rotating seal ring (12), and if **FSS** also O-ring (6) from the drive ring (9).

2.2tf502113.en

Reassemble

Tightening torques

Below table specifies the tightening torques for the screws, bolts and nuts. Always use below torques if no other values are stated.

Size	Tightening torgue, Nm
M8	20
M10	40
M12	67
M14	110

Note! Lubricate O-rings and rubber seals with silicon grease or silicone oil.

FSS: Only for pump with Flushed Shaft Seal.

DMS: Only for pump with Double Mechanical shaft Seal.

a) Ensure that the clearance between the impeller (25 or 26) and the back plate (21) is 0,5 mm for LKH 5 - 60. For LKH 70 - 90 the clearance must be 1 mm.

2.2tf502113.en

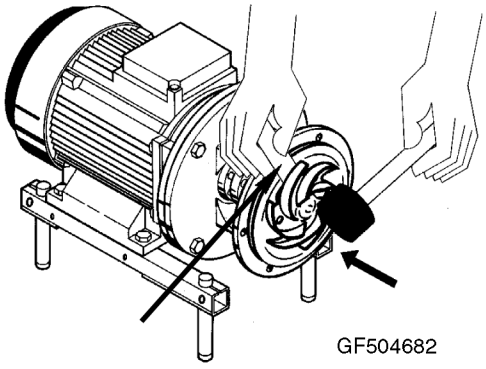

LKH 5 - 60 = 0,5 mm
LKH 70 - 90 = 1 mm

b) If no adjusting needed: continue with f).

c) Remove impeller (25 or 26), back plate (21) and drive ring (9).

(Cont'd)

(Cont'd)

d) **LKH 5:** Loosen the screws (32) and adjust. Tighten the screws (32) evenly to 18 Nm.

e) **LKH 10 - 90:** Loosen the screws (33) and adjust. Tighten the screws (33) evenly to 15 Nm. Counterhold with a screwdriver (34).

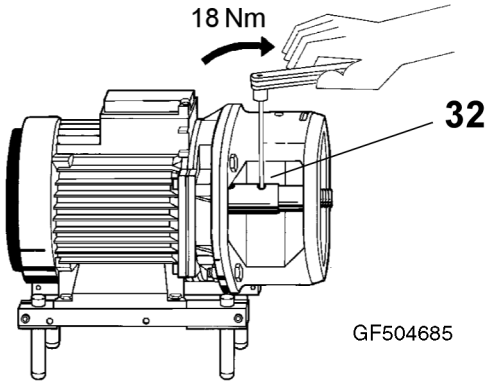

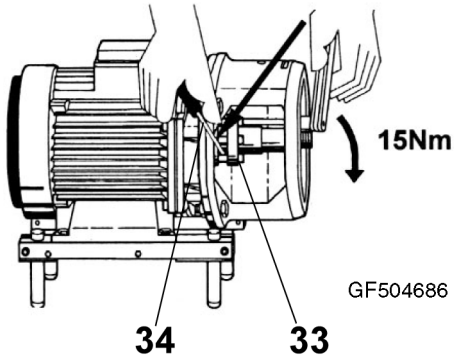

32 Screw
33 Screw
34 Screwdriver

f) Change the parts of the spare parts kit; the O-rings (11, 22, 23) and (27) if use of impeller screw, spring (10), rotating seal ring (12), stationary seal ring (24); for **FSS** also lip seal (4) and O-rings (5, 6) and for **DMS** also O-ring (46) and seal ring (47).

g) **FSS:** Fit lip seal (4) in seal housing (2).
LKH 5 - 60: Use a ø63 mm tube.
LKH 70 - 90: Press in lip seal by hand.

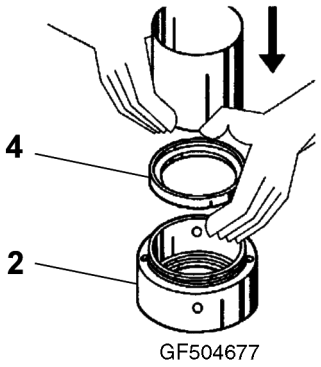

2.2tf502113.en

(Cont'd)

(Cont'd)

h) **FSS:** Fit O-ring (5) onto the seal housing (2).

i) **FSS:** Fit seal housing (2) on back plate (21) and tighten screws (1).

j) **FSS:** Fit O-ring (6) in drive ring (9).

k) **DMS:** Fit O-rings (11) in rotating seal rings (12).

l) **DMS, LKH 70 - 90:** Fit cups (50) on rotating seal rings (12).

m) **DMS:** Fit spring (10) on one of the rotating seal rings (12). Place the drive ring (48) in between.

n) **DMS, LKH 70 - 90:** Turn the drive ring (9) in order to place it correctly on the stub shaft (17).

o) **DMS:** Fit the second rotating seal ring (12) on the other end of the spring.

Caution! **DMS:** Ensure that both drive pins on the drive ring enters the notches in the rotating seal rings.

p) **DMS:** Place the parts on the stationary seal ring fitted in the back plate (21).

q) Remove spring (10). Make sure that O-ring (11) has maximum clearance from the sealing surface.

2.2tf502113.en

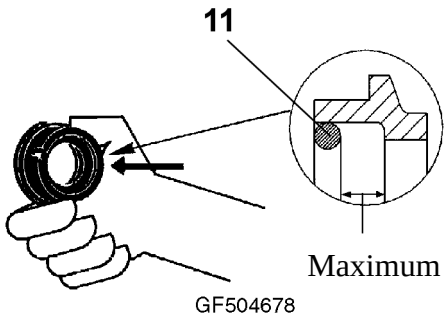

r) Fit spring (10), O-ring (11), rotating seal ring (12), and if **FSS** also O-ring (6) on the drive ring (9).

Caution! Ensure that the driver on the drive ring enters the notch in the rotating seal ring.

(Cont'd)

(Cont'd)

s) **DMS:** Lubricate the O-ring (5) and slide onto seal housing (2). Lubricate O-ring (46) and fit on stationary seal ring (47) and fit this in the seal housing (2).

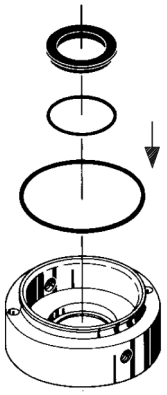

GF504747

t) **DMS:** Clean the sealing surfaces with contact cleaner.

u) **DMS:** Fit the seal housing (2) on the back plate (21) and tighten the screws (1).

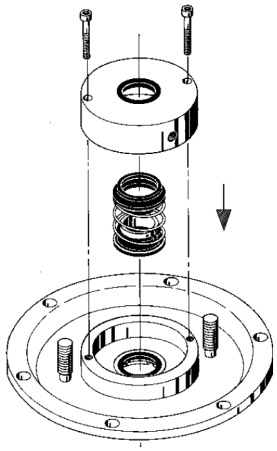

GF504748

2.2tf502113.en

v) **DMS:** To enable fitting the back plate (21) with the shaft seal, remove the connex pin (16) from the shaft. Carefully guide the back plate onto the adaptor (15). Fit washers (14) and nut (13).

(Cont'd)

(Cont'd)

w) Fit complete shaft seal on the stub shaft (17) so that the connex pin (16) enters the notch in the drive ring (9).

x) Fit O-ring (23) on stationary seal ring (24).

Note! When fitting stationary seal ring (24) (left-hand thread), only tighten by hand to avoid deformation of the stationary seal ring. (Max 7 Nm.)

y) Use special tool (6-9612-1371-01) to screw the stationary seal ring (24) into back plate (21).

z) Clean the sealing surfaces with contact cleaner before fitting back plate (21).

aa) Carefully guide the back plate (21) onto adaptor (15).

ab) Fit washers (14) and nuts (13), but do not tighten.

ac) Fit O-ring (22) onto back plate (21).

ad) Fit O-ring (27) in impeller (26), if use of impeller screw (28).

ae) Lubricate the impeller hub with silicone grease or silicone oil.

af) Fit impeller (25) or (26 (if use of impeller screw)) onto stub shaft (17).

ag) Fit and tighten impeller screw (28) if used.

Note! Torque **LKH 5 - 60** = 20 Nm
Torque **LKH 70 - 90** = 50 Nm

ah) **FSS & DMS:** Screw tubes (3) into seal housing (2) and tighten with a spanner.

ai) Fit safety guard (8) and fit and tighten screw (7).

aj) **LKH 5:** Fit pump casing (29), spring washers (19), screws (18) and clamps (20), but do not tighten.
LKH 10 - 90: Fit pump casing (28), washers (30), and cap nuts (31), but do not tighten.

ak) Adjust pump casing (29) to the right position.

al) **LKH 5:** Tighten nuts (13) and screws (18).
LKH 10 - 90: Tighten nuts (13) and cap nuts (31).

2.2tf502113.en

Relubrication Intervals

Motors without grease nipples are permanently lubricated. For motors with grease nipples relubrication intervals are shown in the table below.

Vendor.
Relubrication interval 50 Hz (3000 rpm) / 60 Hz (3600 rpm).
Quantity in Drive End (DE) / Non Drive End (NDE).

Frame size	Motor power (kW)	LKH 5 - 90 / LKHSP 10 - 40 50/60 Hz
80	0.75	ABB: Permanently lubricated
80	1.1	ABB: Permanently lubricated
90	1.5	ABB: Permanently lubricated
90	2.2	ABB: Permanently lubricated
100	3.0	ABB: Permanently lubricated
112	4.0	ABB: Permanently lubricated
132	5.5	ABB: Permanently lubricated
132	7.5	ABB: Permanently lubricated
160	11	ABB: Permanently lubricated
160	15	ABB: Permanently lubricated
160	18.5	ABB: Permanently lubricated
180	22	ABB: Permanently lubricated
200	30	ABB: Permanently lubricated Brook: 4300h/3500h, DE:23g NDE:23g
200	37	ABB: Permanently lubricated Brook: 4300h/3500h, DE:23g NDE:23g
200	45	ABB: Permanently lubricated Brook: 4300h/3500h, DE:23g NDE:23g
250	55	ABB: Permanently lubricated Brook: 3950h/3200h, DE 26g NDE:26g
250	75	ABB: Permanently lubricated Brook: 3950h/3200h, DE 26g NDE:26g

2.2tf502113.en

Note! The table is for 100°C internal bearing temperature. An increase in temperature of 15°C (ambient or internal in bearings), will reduce the greasing interval and bearing lifetime by 50%.

Note! Lubrication interval for vertically mounted pumps is half the value stated in the table.

Recommended grease types:

- Mobilgrease HP
- ESSO Unirex N3
- Shell Lipex EP2
- SKF LGHT3
- Castrol LMX

Spare parts

Kit

LKH 5

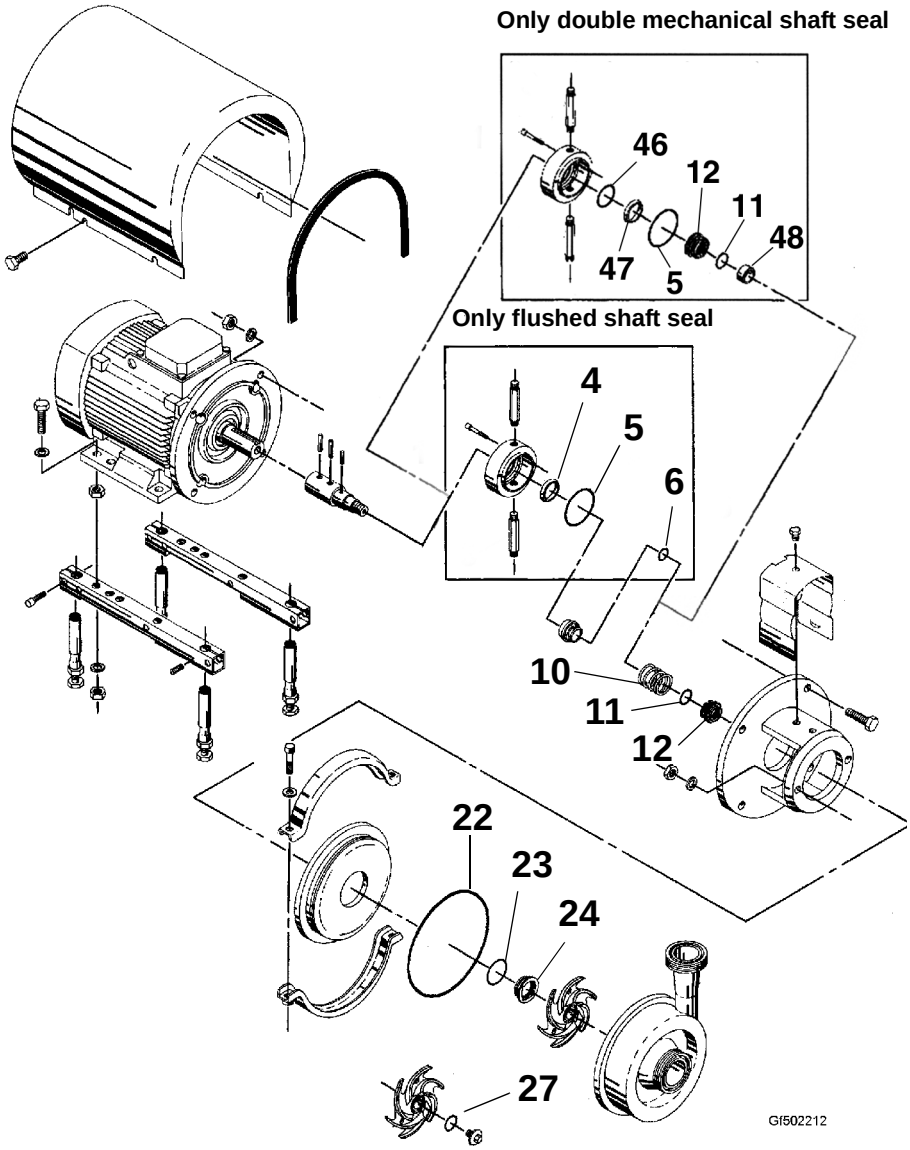

1.0tf502114.en

Remarks:

O-ring (27) is not used for versions without impeller screws.

Service kit includes **Spare part kit** and (pos 22 & 27).

Positions are equal to positions in Maintenance.

LKH 10 - 60

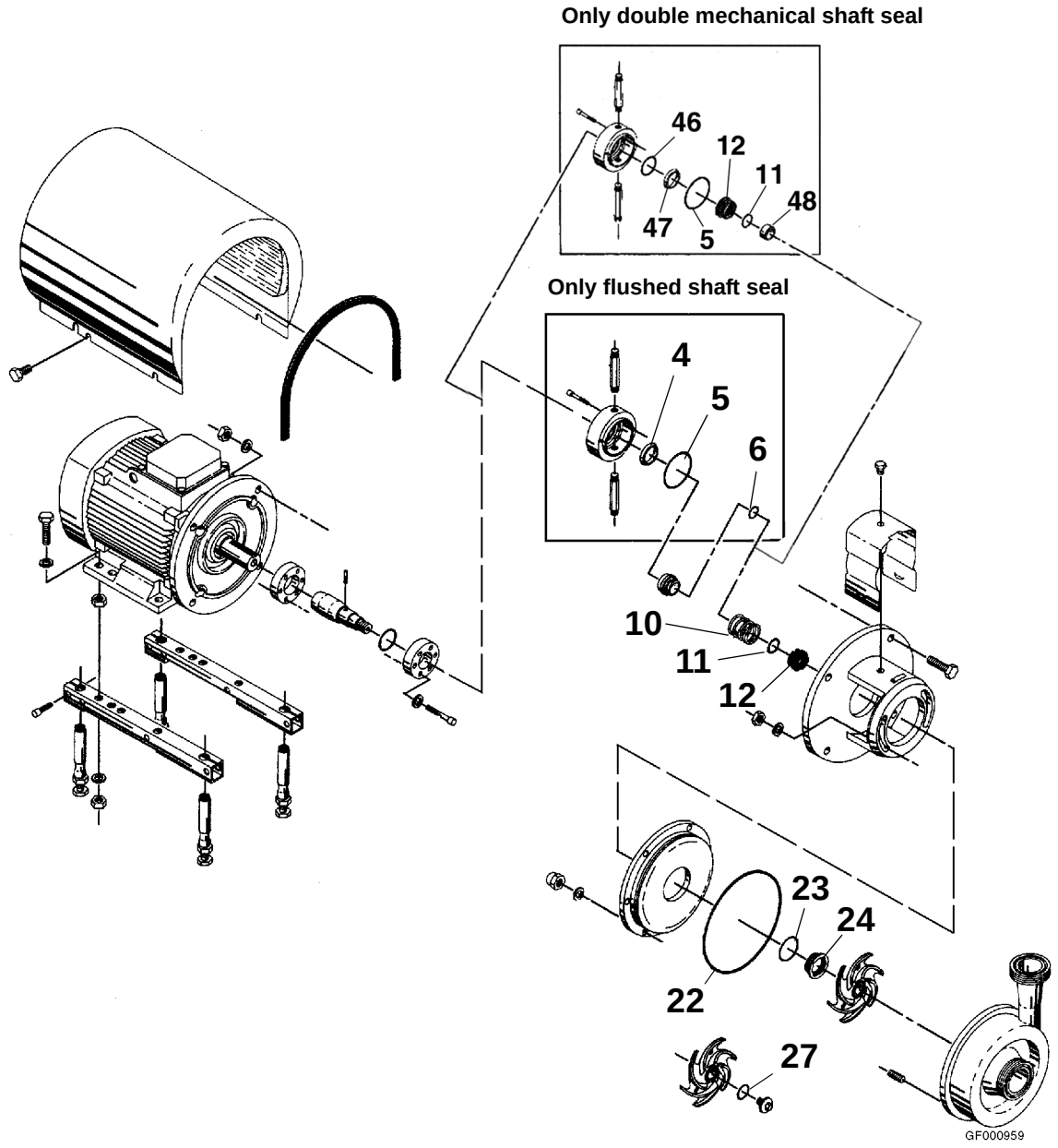

1.0tf502114.en

Remarks:

O-ring (27) is not used for versions without impeller screws.

Service kit includes **Spare part kit** and (pos 22 & 27).

Positions are equal to positions in Maintenance.

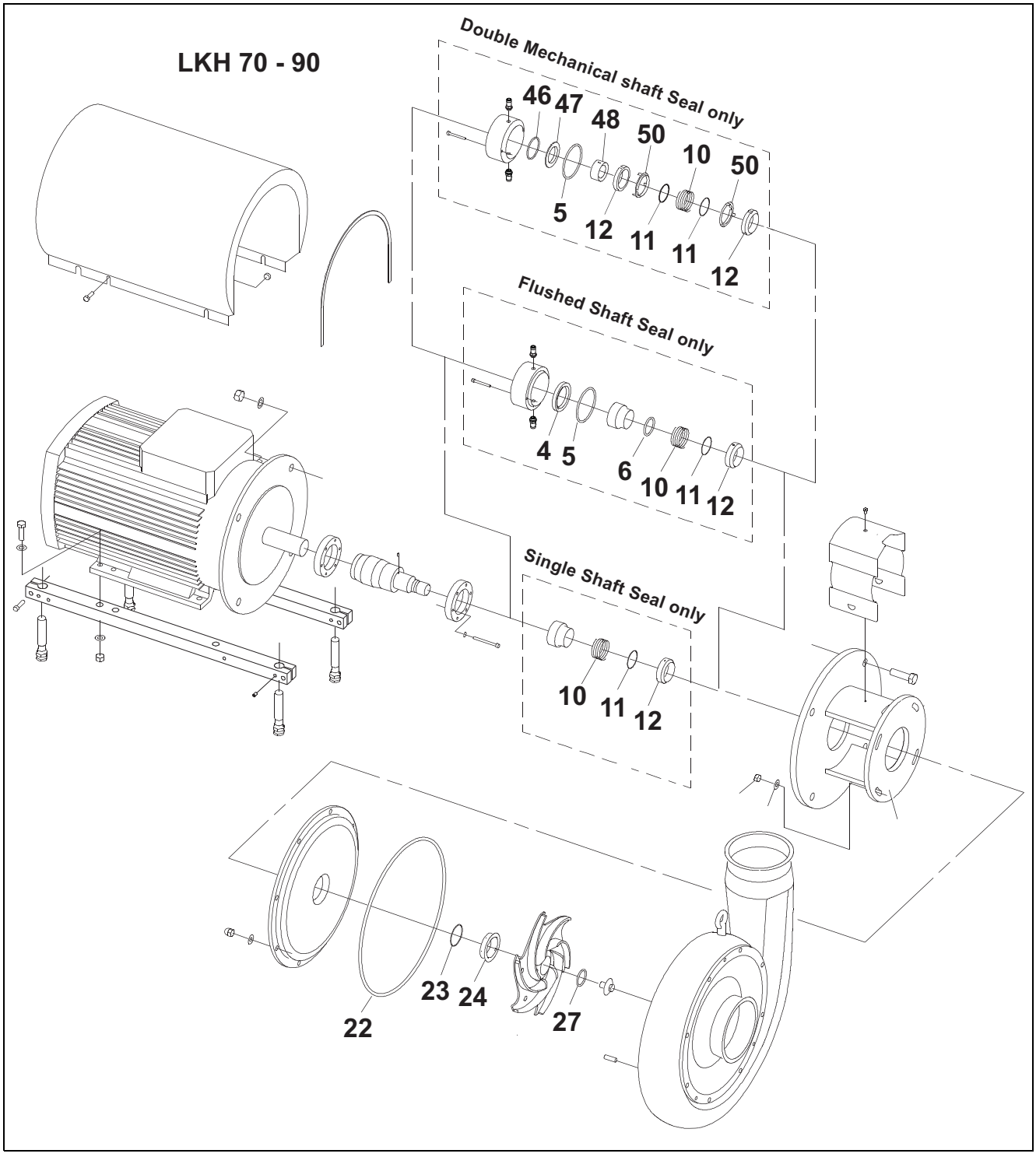

1.0tf502114.en

Remarks:

Service kit includes **Spare part kit** and (pos 22 & 27).

Positions are equal to positions in Maintenance.

Spare part kit

LKH 5 - 60, SiC/C

Pump size	Spare parts Article No.	Description	Included parts	Pos.	Qty.
LKH 5 - 60	6-9612-12-9609	Spare part kit, single shaft seal, EPDM (standard)	Spring O-ring, EPDM Rotating seal ring, carbon O-ring, EPDM Stationary seal ring, SiC	10 11 12 23 24	1 1 1 1 1
	6-9612-12-9610	Spare part kit, single shaft seal, NBR	Spring O-ring, NBR Rotating seal ring, carbon O-ring, NBR Stationary seal ring, SiC	10 11 12 23 24	1 1 1 1 1
	6-9612-12-9611	Spare part kit, single shaft seal, FPM	Spring O-ring, FPM Rotating seal ring, carbon O-ring, FPM Stationary seal ring, SiC	10 11 12 23 24	1 1 1 1 1
	6-9612-12-9612	Spare part kit, single shaft seal, FEP	Spring O-ring, FEP Rotating seal ring, carbon O-ring, FEP Stationary seal ring, SiC	10 11 12 23 24	1 1 1 1 1

1.0tf502114.en

Pump size	Spare parts Article No.	Description	Included parts	Pos.	Qty.
LKH 5 - 60	6-9612-12-9625	Spare part kit, flushed shaft seal, EPDM (standard)	Lip seal O-ring for seal housing O-ring for drive ring Spring O-ring, EPDM Rotating seal ring, carbon O-ring, EPDM Stationary seal ring, SiC	4 5 6 10 11 12 23 24	1 1 1 1 1 1 1 1
	6-9612-12-9626	Spare part kit, flushed shaft seal, NBR	Lip seal O-ring for seal housing O-ring for drive ring Spring O-ring, NBR Rotating seal ring, carbon O-ring, NBR Stationary seal ring, SiC	4 5 6 10 11 12 23 24	1 1 1 1 1 1 1 1
	6-9612-12-9627	Spare part kit, flushed shaft seal, FPM	Lip seal O-ring for seal housing O-ring for drive ring Spring O-ring, FPM Rotating seal ring, carbon O-ring, FPM Stationary seal ring, SiC	4 5 6 10 11 12 23 24	1 1 1 1 1 1 1 1
	6-9612-12-9628	Spare part kit, flushed shaft seal, FEP	Lip seal O-ring for seal housing O-ring for drive ring Spring O-ring, FEP Rotating seal ring, carbon O-ring, FEP Stationary seal ring, SiC	4 5 6 10 11 12 23 24	1 1 1 1 1 1 1 1

1.0tf502114.en

Spare parts

Pump size	Spare parts Article No.	Description	Included parts	Pos.	Qty.
LKH 5 - 60	6-9612-12-9613	Spare part kit, double mechanical shaft seal, EPDM (standard)	O-ring for seal housing Spring O-ring, EPDM Rotating seal ring, carbon O-ring, EPDM Stationary seal ring, SiC O-ring, EPDM Sec. stationary seal ring, SiC Drive ring	5 10 11 12 23 24 46 47 48	1 1 2 2 1 1 1 1 1
	6-9612-12-9614	Spare part kit, double mechanical shaft seal, NBR	O-ring for seal housing Spring O-ring, NBR Rotating seal ring, carbon O-ring, NBR Stationary seal ring, SiC O-ring, EPDM Sec. stationary seal ring, SiC Drive ring	5 10 11 12 23 24 46 47 48	1 1 2 2 1 1 1 1 1
	6-9612-12-9615	Spare part kit, double mechanical shaft seal, FPM	O-ring for seal housing Spring O-ring, FPM Rotating seal ring, carbon O-ring, FPM Stationary seal ring, SiC O-ring, EPDM Sec. stationary seal ring, SiC Drive ring	5 10 11 12 23 24 46 47 48	1 1 2 2 1 1 1 1 1
	6-9612-12-9616	Spare part kit, double mechanical shaft seal, FEP	O-ring for seal housing Spring O-ring, FEP Rotating seal ring, carbon O-ring, FEP Stationary seal ring, SiC O-ring, EPDM Sec. stationary seal ring, SiC Drive ring	5 10 11 12 23 24 46 47 48	1 1 2 2 1 1 1 1 1

1.0tf502114.en

LKH 5 - 60, SiC/SiC

Pump size	Spare parts Article No.	Description	Included parts	Pos.	Qty.
LKH 5 - 60	6-9612-12-9605	Spare part kit, alternatives (SiC/ SiC), single shaft seal, EPDM (stand-ard)	Spring O-ring, EPDM Rotating seal ring, SiCSiC O-ring, EPDM Stationary seal ring, SiC	10 11 12 23 24	1 1 1 1 1
	6-9612-12-9606	Spare part kit, alternatives (SiC/ SiC), single shaft seal, NBR	Spring O-ring, NBR Rotating seal ring, SiC O-ring, NBR Stationary seal ring, SiC	10 11 12 23 24	1 1 1 1 1
	6-9612-12-9607	Spare part kit, alternatives (SiC/ SiC), single shaft seal, FPM	Spring O-ring, FPM Rotating seal ring, SiC O-ring, FPM Stationary seal ring, SiC	10 11 12 23 24	1 1 1 1 1
	6-9612-12-9608	SpaFEPre part kit, alternatives (SiC/ SiC), single shaft seal, FEP	Spring O-ring, FEP Rotating seal ring, SiC O-ring, FEP Stationary seal ring, SiC	10 11 12 23 24	1 1 1 1 1

1.0tf502114.en

Spare parts

Pump size	Spare parts Article No.	Description	Included parts	Pos.	Qty.
LKH 5 - 60	6-9612-12-9629	Spare part kit, alternatives (SiC/SiC), flushed shaft seal, EPDM (standard)	Lip seal O-ring for seal housing O-ring for drive ring Spring O-ring, EPDM Rotating seal ring, SiC O-ring, EPDM Stationary seal ring, SiC	4 5 6 10 11 12 23 24	1 1 1 1 1 1 1 1
	6-9612-12-9630	Spare part kit, alternatives (SiC/SiC), flushed shaft seal, NBR	Lip seal O-ring for seal housing O-ring for drive ring Spring O-ring, NBR Rotating seal ring, SiC O-ring, NBR Stationary seal ring, SiC	4 5 6 10 11 12 23 24	1 1 1 1 1 1 1 1
	6-9612-12-9631	Spare part kit, alternatives (SiC/SiC), flushed shaft seal, FPM	Lip seal O-ring for seal housing O-ring for drive ring Spring O-ring, FPM Rotating seal ring, SiC O-ring, FPM Stationary seal ring, SiC	4 5 6 10 11 12 23 24	1 1 1 1 1 1 1 1
	6-9612-12-9632	Spare part kit, alternatives (SiC/SiC), flushed shaft seal, FEP	Lip seal O-ring for seal housing O-ring for drive ring Spring O-ring, FEP Rotating seal ring, SiC O-ring, FEP Stationary seal ring, SiC	4 5 6 10 11 12 23 24	1 1 1 1 1 1 1 1

1.0tf502114.en

Pump size	Spare parts Article No.	Description	Included parts	Pos.	Qty.
LKH 5 - 60	6-9612-12-9617	Spare part kit, alternatives (SiC/ SiC), double mechanical shaft seal, EPDM (stand-ard)	O-ring for seal housing Spring O-ring, EPDM Rotating seal ring, SiC O-ring, EPDM Stationary seal ring, SiC O-ring, EPDM Sec. stationary seal ring, SiC Drive ring	5 10 11 12 23 24 46 47 48	1 1 2 2 1 1 1 1 1
	6-9612-12-9618	Spare part kit, alternatives (SiC/ SiC), double mechanical shaft seal, NBR	O-ring for seal housing Spring O-ring, NBR Rotating seal ring, SiC O-ring, NBR Stationary seal ring, SiC O-ring, EPDM Sec. stationary seal ring, SiC Drive ring	5 10 11 12 23 24 46 47 48	1 1 2 2 1 1 1 1 1
	6-9612-12-9619	Spare part kit, alternatives (SiC/ SiC), double mechanical shaft seal, FPM	O-ring for seal housing Spring O-ring, FPM Rotating seal ring, SiC O-ring, FPM Stationary seal ring, SiC O-ring, EPDM Sec. stationary seal ring, SiC Drive ring	5 10 11 12 23 24 46 47 48	1 1 2 2 1 1 1 1 1
	6-9612-12-9620	Spare part kit, alternatives (SiC/ SiC), double mechanical shaft seal, FEP	O-ring for seal housing Spring O-ring, FEP Rotating seal ring, SiC O-ring, FEP Stationary seal ring, SiC O-ring, EPDM Sec. stationary seal ring, SiC Drive ring	5 10 11 12 23 24 46 47 48	1 1 2 2 1 1 1 1 1

1.0tf502114.en

LKH 70 - 90, SiC/C

Pump size	Spare parts Article No.	Description	Included parts	Pos.	Qty.
LKH 70 - 90	6-9612-51-5101	Spare part kit, single shaft seal, EPDM (standard)	Spring O-ring, EPDM Rotating seal ring, carbon O-ring, EPDM Stationary seal ring, SiC	10 11 12 23 24	1 1 1 1 1
	6-9612-51-5102	Spare part kit, single shaft seal, NBR	Spring O-ring, NBR Rotating seal ring, carbon O-ring, NBR Stationary seal ring, SiC	10 11 12 23 24	1 1 1 1 1
	6-9612-51-5103	Spare part kit, single shaft seal, FPM	Spring O-ring, FPM Rotating seal ring, carbon O-ring, FPM Stationary seal ring, SiC	10 11 12 23 24	1 1 1 1 1
	6-9612-51-5104	Spare part kit, single shaft seal, FEP	Spring O-ring, FEP Rotating seal ring, carbon O-ring, FEP Stationary seal ring, SiC	10 11 12 23 24	1 1 1 1 1

1.0tf502114.en

Pump size	Spare parts Article No.	Description	Included parts	Pos.	Qty.
LKH 70 - 90	6-9612-51-5109	Spare part kit, flushed shaft seal, EPDM (standard)	Lip seal O-ring for seal housing O-ring for drive ring Spring O-ring, EPDM Rotating seal ring, carbon O-ring, EPDM Stationary seal ring, SiC	4 5 6 10 11 12 23 24	1 1 1 1 1 1 1 1
	6-9612-51-5110	Spare part kit, flushed shaft seal, NBR	Lip seal O-ring for seal housing O-ring for drive ring Spring O-ring, NBR Rotating seal ring, carbon O-ring, NBR Stationary seal ring, SiC	4 5 6 10 11 12 23 24	1 1 1 1 1 1 1 1
	6-9612-51-5111	Spare part kit, flushed shaft seal, FPM	Lip seal O-ring for seal housing O-ring for drive ring Spring O-ring, FPM Rotating seal ring, carbon O-ring, FPM Stationary seal ring, SiC	4 5 6 10 11 12 23 24	1 1 1 1 1 1 1 1
	6-9612-51-5112	Spare part kit, flushed shaft seal, FEP	Lip seal O-ring for seal housing O-ring for drive ring Spring O-ring, FEP Rotating seal ring, carbon O-ring, FEP Stationary seal ring, SiC	4 5 6 10 11 12 23 24	1 1 1 1 1 1 1 1

1.0tf502114.en

Spare parts

Pump size	Spare parts Article No.	Description	Included parts	Pos.	Qty.
LKH 70 - 90	6-9612-51-5117	Spare part kit, double mechanical shaft seal, EPDM (standard)	O-ring for seal housing Spring O-ring, EPDM Rotating seal ring, carbon O-ring, EPDM Stationary seal ring, SiC O-ring, EPDM Sec. stationary seal ring, SiC Drive ring Cup	5 10 11 12 23 24 46 47 48 50	1 1 2 2 1 1 1 1 1 2
	6-9612-51-5118	Spare part kit, double mechanical shaft seal, NBR	O-ring for seal housing Spring O-ring, NBR Rotating seal ring, carbon O-ring, NBR Stationary seal ring, SiC O-ring, EPDM Sec. stationary seal ring, SiC Drive ring Cup	5 10 11 12 23 24 46 47 48 50	1 1 2 2 1 1 1 1 1 2
	6-9612-51-5119	Spare part kit, double mechanical shaft seal, FPM	O-ring for seal housing Spring O-ring, FPM Rotating seal ring, carbon O-ring, FPM Stationary seal ring, SiC O-ring, EPDM Sec. stationary seal ring, SiC Drive ring Cup	5 10 11 12 23 24 46 47 48 50	1 1 2 2 1 1 1 1 1 2
	6-9612-51-5120	Spare part kit, double mechanical shaft seal, FEP	O-ring for seal housing Spring O-ring, FEP Rotating seal ring, carbon O-ring, FEP Stationary seal ring, SiC O-ring, EPDM Sec. stationary seal ring, SiC Drive ring Cup	5 10 11 12 23 24 46 47 48 50	1 1 2 2 1 1 1 1 1 2

1.0tf502114.en

LKH 70 - 90, SiC/SiC

Pump size	Spare parts Article No.	Description	Included parts	Pos.	Qty.
LKH 70 - 90	6-9612-51-5105	Spare part kit, alternatives (SiC/ SiC), single shaft seal, EPDM (stand-ard)	Spring O-ring, EPDM Rotating seal ring, SiC O-ring, EPDM Stationary seal ring, SiC	10 11 12 23 24	1 1 1 1 1
	6-9612-51-5106	Spare part kit, alternatives (SiC/ SiC), single shaft seal, NBR	Spring O-ring, NBR Rotating seal ring, SiC O-ring, NBR Stationary seal ring, SiC	10 11 12 23 24	1 1 1 1 1
	6-9612-51-5107	Spare part kit, alternatives (SiC/ SiC), single shaft seal, FPM	Spring O-ring, FPM Rotating seal ring, SiC O-ring, FPM Stationary seal ring, SiC	10 11 12 23 24	1 1 1 1 1
	6-9612-51-5108	Spare part kit, alternatives (SiC/ SiC), single shaft seal, FEP	Spring O-ring, FEP Rotating seal ring, SiC O-ring, FEP Stationary seal ring, SiC	10 11 12 23 24	1 1 1 1 1

1.0tf502114.en

Spare parts

Pump size	Spare parts Article No.	Description	Included parts	Pos.	Qty.
LKH 70 - 90	6-9612-51-5113	Spare part kit, alternatives (SiC/ SiC), flushed shaft seal, EPDM (stand-ard)	Lip seal O-ring for seal housing O-ring for drive ring Spring O-ring, EPDM Rotating seal ring, SiC O-ring, EPDM Stationary seal ring, SiC	4 5 6 10 11 12 23 24	1 1 1 1 1 1 1 1
	6-9612-51-5114	Spare part kit, alternatives (SiC/ SiC), flushed shaft seal, NBR	Lip seal O-ring for seal housing O-ring for drive ring Spring O-ring, NBR Rotating seal ring, SiC O-ring, NBR Stationary seal ring, SiC	4 5 6 10 11 12 23 24	1 1 1 1 1 1 1 1
	6-9612-51-5115	Spare part kit, alternatives (SiC/ SiC), flushed shaft seal, FPM	Lip seal O-ring for seal housing O-ring for drive ring Spring O-ring, FPM Rotating seal ring, SiC O-ring, FPM Stationary seal ring, SiC	4 5 6 10 11 12 23 24	1 1 1 1 1 1 1 1
	6-9612-51-5116	Spare part kit, alternatives (SiC/ SiC), flushed shaft seal, FEP	Lip seal O-ring for seal housing O-ring for drive ring Spring O-ring, FEP Rotating seal ring, SiC O-ring, FEP Stationary seal ring, SiC	4 5 6 10 11 12 23 24	1 1 1 1 1 1 1 1

1.0tf502114.en

Pump size	Spare parts Article No.	Description	Included parts	Pos.	Qty.
LKH 70 - 90	6-9612-51-5121	Spare part kit, alternatives (SiC/ SiC), double mechanical shaft seal, EPDM (stand-ard)	O-ring for seal housing Spring O-ring, EPDM Rotating seal ring, SiC O-ring, EPDM Stationary seal ring, SiC O-ring, EPDM Sec. stationary seal ring, SiC Drive ring Cup	5 10 11 12 23 24 46 47 48 50	1 1 2 2 1 1 1 1 1 2
	6-9612-51-5122	Spare part kit, alternatives (SiC/ SiC), double mechanical shaft seal, NBR	O-ring for seal housing Spring O-ring, NBR Rotating seal ring, SiC O-ring, NBR Stationary seal ring, SiC O-ring, EPDM Sec. stationary seal ring, SiC Drive ring Cup	5 10 11 12 23 24 46 47 48 50	1 1 2 2 1 1 1 1 1 2
	6-9612-51-5123	Spare part kit, alternatives (SiC/ SiC), double mechanical shaft seal, FPM	O-ring for seal housing Spring O-ring, FPM Rotating seal ring, SiC O-ring, FPM Stationary seal ring, SiC O-ring, EPDM Sec. stationary seal ring, SiC Drive ring Cup	5 10 11 12 23 24 46 47 48 50	1 1 2 2 1 1 1 1 1 2
	6-9612-51-5124	Spare part kit, alternatives (SiC/ SiC), double mechanical shaft seal, FEP	O-ring for seal housing Spring O-ring, FEP Rotating seal ring, SiC O-ring, FEP Stationary seal ring, SiC O-ring, EPDM Sec. stationary seal ring, SiC Drive ring Cup	5 10 11 12 23 24 46 47 48 50	1 1 2 2 1 1 1 1 1 2

1.0tf502114.en

LKH 5 - 90, Tool

Pump size	Spare parts Article No.	Description	Included parts	Pos.	Qty.
LKH 5 - 90	6-9612-13-7101	Tool complete Stationary seal ring		-	-

Service kit

LKH 5 - 60, SiC/C

Pump size	Spare parts Article No.	Description	Included parts	Pos.	Qty.
LKH-5	6-9611-92-2302	Service kit, single shaft seal, EPDM (standard)	Spring O-ring, EPDM Rotating seal ring, carbon O-ring, EPDM O-ring, EPDM Stationary seal ring, SiC	10 11 12 22 23 24	1 1 1 1 1 1
LKH-10, LKH-15	6-9611-92-2072				
LKH-20	6-9611-92-2080				
LKH-25, LKH 35, LKH-45	6-9611-92-2178				
LKH-40, LKH-50, LKH-60	6-9611-92-2088				
LKH-5	6-9611-92-2303	Service kit, single shaft seal, NBR	Spring O-ring, NBR Rotating seal ring, carbon O-ring, NBR O-ring, NBR Stationary seal ring, SiC	10 11 12 22 23 24	1 1 1 1 1 1
LKH-10, LKH-15	6-9611-92-2073				
LKH-20	6-9611-92-2081				
LKH-25, LKH 35, LKH-45	6-9611-92-2179				
LKH-40, LKH-50, LKH-60	6-9611-92-2089				
LKH-5	6-9611-92-2304	Service kit, single shaft seal, FPM	Spring O-ring, FPM Rotating seal ring, carbon O-ring, FPM O-ring, FPM Stationary seal ring, SiC	10 11 12 22 23 24	1 1 1 1 1 1
LKH-10, LKH-15	6-9611-92-2074				
LKH-20	6-9611-92-2082				
LKH-25, LKH 35, LKH-45	6-9611-92-2180				
LKH-40, LKH-50, LKH-60	6-9611-92-2090				
LKH-5	6-9611-92-2305	Service kit, single shaft seal, FEP	Spring O-ring, FEP Rotating seal ring, carbon O-ring, FEP O-ring, FEP Stationary seal ring, SiC	10 11 12 22 23 24	1 1 1 1 1 1
LKH-10, LKH-15	6-9611-92-2075				
LKH-20	6-9611-92-2083				
LKH-25, LKH 35, LKH-45	6-9611-92-2181				
LKH-30, LKH-40, LKH-50, LKH-60	6-9611-92-2091				
LKH-5	6-9611-92-2310	Service kit, flushed shaft seal, EPDM (standard)	Lip seal O-ring for seal housing O-ring for drive ring Spring O-ring, EPDM Rotating seal ring, carbon O-ring, EPDM O-ring, EPDM Stationary seal ring, SiC	4 5 6 10 11 12 22 23 24	1 1 1 1 1 1 1 1 1
LKH-10, LKH-15	6-9611-92-2076				
LKH-20	6-9611-92-2084				
LKH-25, LKH 35, LKH-45	6-9611-92-2186				
LKH-40, LKH-50, LKH-60	6-9611-92-2092				

1.0tf502114.en

Pump size	Spare parts Article No.	Description	Included parts	Pos.	Qty.
LKH-5	6-9611-92-2311	Service kit, flushed shaft seal, NBR	Lip seal	4	1
			O-ring for seal housing	5	1
			O-ring for drive ring	6	1
			Spring	10	1
			O-ring, NBR	11	1
			Rotating seal ring, carbon	12	1
			O-ring, NBR	22	1
			O-ring, NBR	23	1
			Stationary seal ring, SiC	24	1
LKH-10, LKH-15	6-9611-92-2077				
LKH-20	6-9611-92-2085				
LKH-25, LKH 35, LKH-45	6-9611-92-2187				
LKH-40, LKH-50, LKH-60	6-9611-92-2093				
LKH-5	6-9611-92-2312	Service kit, flushed shaft seal, FPM	Lip seal	4	1
			O-ring for seal housing	5	1
			O-ring for drive ring	6	1
			Spring	10	1
			O-ring, FPM	11	1
			Rotating seal ring, carbon	12	1
			O-ring, FPM	22	1
			O-ring, FPM	23	1
			Stationary seal ring, SiC	24	1
LKH-10, LKH-15	6-9611-92-2078				
LKH-20	6-9611-92-2086				
LKH-25, LKH 35, LKH-45	6-9611-92-2188				
LKH-40, LKH-50, LKH-60	6-9611-92-2094				
LKH-5	6-9611-92-2313	Service kit, flushed shaft seal, FEP	Lip seal	4	1
			O-ring for seal housing	5	1
			O-ring for drive ring	6	1
			Spring	10	1
			O-ring, FEP	11	1
			Rotating seal ring, carbon	12	1
			O-ring, FEP	22	1
			O-ring, FEP	23	1
			Stationary seal ring, SiC	24	1
LKH-10, LKH-15	6-9611-92-2079				
LKH-20	6-9611-92-2087				
LKH-25, LKH 35, LKH-45	6-9611-92-2189				
LKH-40, LKH-50, LKH-60	6-9611-92-2095				
LKH-5	6-9611-92-2318	Service kit, double mechanical shaft seal, EPDM (standard)	O-ring for seal housing	5	1
			Spring	10	1
			O-ring, EPDM	11	2
			Rotating seal ring, carbon	12	2
			O-ring, EPDM	22	1
			O-ring, EPDM	23	1
			Stationary seal ring, SiC	24	1
			O-ring, EPDM	46	1
			Sec. stationary seal ring, SiC	47	1
			Drive ring	48	1
LKH-10, LKH-15	6-9611-92-2206				
LKH-20	6-9611-92-2214				
LKH-25, LKH 35, LKH-45	6-9611-92-2222				
LKH-40, LKH-50, LKH-60	6-9611-92-2230				
LKH-5	6-9611-92-2319	Service kit, double mechanical shaft seal, NBR	O-ring for seal housing	5	1
			Spring	10	1
			O-ring, NBR	11	2
			Rotating seal ring, carbon	12	2
			O-ring, NBR	22	1
			O-ring, NBR	23	1
			Stationary seal ring, SiC	24	1
			O-ring, NBR	46	1
			Sec. stationary seal ring, SiC	47	1
			Drive ring	48	1
LKH-10, LKH-15	6-9611-92-2207				
LKH-20	6-9611-92-2215				
LKH-25, LKH 35, LKH-45	6-9611-92-2223				
LKH-40, LKH-50, LKH-60	6-9611-92-2231				

1.0tf502114.en

Pump size	Spare parts Article No.	Description	Included parts	Pos.	Qty.
LKH-5	6-9611-92-2320	Service kit, double mechanical shaft seal, FPM	O-ring for seal housing Spring O-ring, FPM Rotating seal ring, carbon O-ring, FPM O-ring, FPM Stationary seal ring, SiC O-ring, FPM Sec. stationary seal ring, SiC Drive ring	5 10 11 12 22 23 24 46 47 48	1 1 2 2 1 1 1 1 1 1
LKH-10, LKH-15	6-9611-92-2208				
LKH-20	6-9611-92-2216				
LKH-25, LKH 35, LKH-45	6-9611-92-2224				
LKH-40, LKH-50, LKH-60	6-9611-92-2232				
LKH-5	6-9611-92-2321	Service kit, double mechanical shaft seal, FEP	O-ring for seal housing Spring O-ring, FEP Rotating seal ring, carbon O-ring, FEP O-ring, FEP Stationary seal ring, SiC O-ring, FEP Sec. stationary seal ring, SiC Drive ring	5 10 11 12 22 23 24 46 47 48	1 1 2 2 1 1 1 1 1 1
LKH-10, LKH-15	6-9611-92-2209				
LKH-20	6-9611-92-2217				
LKH-25, LKH 35, LKH-45	6-9611-92-2225				
LKH-40, LKH-50, LKH-60	6-9611-92-2233				

LKH 5 - 90, SiC/C, impeller screw

Pump size	Spare parts Article No.	Description	Included parts	Pos.	Qty.
LKH-5	6-9611-92-2306	Service kit, single shaft seal, EPDM (standard)	Spring O-ring, EPDM Rotating seal ring, carbon O-ring, EPDM (LKH 5-80) O-ring, EPDM (LKH 85-90) O-ring, EPDM Stationary seal ring, SiC O-ring, EPDM	10 11 12 22 22 23 24 27	1 1 1 1 2 1 1 1
LKH-10, LKH-15	6-9611-92-2114				
LKH-20	6-9611-92-2122				
LKH-25, LKH 35, LKH-45	6-9611-92-2182				
LKH-30, LKH-40, LKH-50, LKH-60	6-9611-92-2130				
LKH-70	6-9611-92-2238				
LKH-80	6-9611-92-2843				
LKH-85	6-9611-92-2952				
LKH-90	6-9611-92-2867				
LKH-5	6-9611-92-2307	Service kit, single shaft seal, NBR	Spring O-ring, NBR Rotating seal ring, carbon O-ring, NBR (LKH 5-80) O-ring, NBR (LKH 85-90) O-ring, NBR Stationary seal ring, SiC O-ring, NBR	10 11 12 22 22 23 24 27	1 1 1 1 2 1 1 1
LKH-10, LKH-15	6-9611-92-2115				
LKH-20	6-9611-92-2123				
LKH-25, LKH 35, LKH-45	6-9611-92-2183				
LKH-30, LKH-40, LKH-50, LKH-60	6-9611-92-2131				
LKH-70	6-9611-92-2239				
LKH-80	6-9611-92-2844				
LKH-85	6-9611-92-2953				
LKH-90	6-9611-92-2868				

1.0tf502114.en

Pump size	Spare parts Article No.	Description	Included parts	Pos.	Qty.
LKH-5	6-9611-92-2308	Service kit, single shaft seal, FPM	Spring O-ring, FPM Rotating seal ring, carbon O-ring, FPM O-ring, FPM Stationary seal ring, SiC O-ring, FPM	10 11 12 22 23 24 27	1 1 1 1 1 1 1
LKH-10, LKH-15	6-9611-92-2116				
LKH-20	6-9611-92-2124				
LKH-25, LKH 35, LKH-45	6-9611-92-2184				
LKH-30, LKH-40, LKH-50, LKH-60	6-9611-92-2132				
LKH-70	6-9611-92-2240				
LKH-5	6-9611-92-2309	Service kit, single shaft seal, FEP	Spring O-ring, FEP Rotating seal ring, carbon O-ring, FEP (LKH 5-80) O-ring, FEP (LKH 85-90) O-ring, FEP Stationary seal ring, SiC O-ring, FEP	10 11 12 22 22 23 24 27	1 1 1 1 2 1 1 1
LKH-10, LKH-15	6-9611-92-2117				
LKH-20	6-9611-92-2125				
LKH-25, LKH 35, LKH-45	6-9611-92-2185				
LKH-30, LKH-40, LKH-50, LKH-60	6-9611-92-2133				
LKH-70	6-9611-92-2241				
LKH-85	6-9611-92-2955				
LKH-90	6-9611-92-2870				
LKH-5	6-9611-92-2314	Service kit, flushed shaft seal, EPDM (standard)	Lip seal O-ring for seal housing O-ring for drive ring Spring O-ring, EPDM Rotating seal ring, carbon O-ring, EPDM (LKH 5-80) O-ring, EPDM (LKH 85-90) O-ring, EPDM Stationary seal ring, SiC O-ring, EPDM	4 5 6 10 11 12 22 22 23 24 27	1 1 1 1 1 1 1 2 1 1 1
LKH-10, LKH-15	6-9611-92-2118				
LKH-20	6-9611-92-2126				
LKH-25, LKH 35, LKH-45	6-9611-92-2190				
LKH-30, LKH-40, LKH-50, LKH-60	6-9611-92-2134				
LKH-70	6-9611-92-2242				
LKH-80	6-9611-92-2847				
LKH-85	6-9611-92-2956				
LKH-90	6-9611-92-2871				
LKH-5	6-9611-92-2315	Service kit, flushed shaft seal, NBR	Lip seal O-ring for seal housing O-ring for drive ring Spring O-ring, NBR Rotating seal ring, carbon O-ring, NBR (LKH 5-80) O-ring, NBR (LKH 85-90) O-ring, NBR Stationary seal ring, SiC O-ring, NBR	4 5 6 10 11 12 22 22 23 24 27	1 1 1 1 1 1 1 2 1 1 1
LKH-10, LKH-15	6-9611-92-2119				
LKH-20	6-9611-92-2127				
LKH-25, LKH 35, LKH-45	6-9611-92-2191				
LKH-30, LKH-40, LKH-50, LKH-60	6-9611-92-2135				
LKH-70	6-9611-92-2243				
LKH-80	6-9611-92-2848				
LKH-85	6-9611-92-2957				
LKH-90	6-9611-92-2872				

1.0tf502114.en

Spare parts

Pump size	Spare parts Article No.	Description	Included parts	Pos.	Qty.
LKH-5	6-9611-92-2316	Service kit, flushed shaft seal, FPM	Lip seal O-ring for seal housing O-ring for drive ring Spring O-ring, FPM Rotating seal ring, carbon O-ring, FPM O-ring, FPM Stationary seal ring, SiC O-ring, FPM	4 5 6 10 11 12 22 23 24 27	1 1 1 1 1 1 1 1 1 1
LKH-10, LKH-15	6-9611-92-2120				
LKH-20	6-9611-92-2128				
LKH-25, LKH 35, LKH-45	6-9611-92-2192				
LKH-30, LKH-40, LKH-50, LKH-60	6-9611-92-2136				
LKH-70	6-9611-92-2244				
LKH-5	6-9611-92-2317	Service kit, flushed shaft seal, FEP	Lip seal O-ring for seal housing O-ring for drive ring Spring O-ring, FEP Rotating seal ring, carbon O-ring, FEP (LKH 5-80) O-ring, FEP (LKH 85-90) O-ring, FEP Stationary seal ring, SiC O-ring, FEP	4 5 6 10 11 12 22 22 23 24 27	1 1 1 1 1 1 1 2 1 1 1
LKH-10, LKH-15	6-9611-92-2121				
LKH-20	6-9611-92-2129				
LKH-25, LKH 35, LKH-45	6-9611-92-2193				
LKH-30, LKH-40, LKH-50, LKH-60	6-9611-92-2137				
LKH-70	6-9611-92-2245				
LKH-85	6-9611-92-2959				
LKH-90	6-9611-92-2874				
LKH-5	6-9611-92-2322	Service kit, double mechanical shaft seal, EPDM (standard)	O-ring for seal housing Spring O-ring, EPDM Rotating seal ring, carbon O-ring, EPDM (LKH 5-80) O-ring, EPDM (LKH 85-90) O-ring, EPDM Stationary seal ring, SiC O-ring, EPDM O-ring, EPDM Sec. stationary seal ring, SiC Drive ring Cup (LKH 70 - 90 only)	5 10 11 12 22 22 23 24 27 46 47 48 50	1 1 2 2 1 2 1 1 1 1 1 1 2
LKH-10, LKH-15	6-9611-92-2210				
LKH-20	6-9611-92-2218				
LKH-25, LKH 35, LKH-45	6-9611-92-2226				
LKH-40, LKH-50, LKH-60	6-9611-92-2234				
LKH-70	6-9611-92-2416				
LKH-80	6-9611-92-2851				
LKH-85	6-9611-92-2960				
LKH-90	6-9611-92-2875				
LKH-5	6-9611-92-2323	Service kit, double mechanical shaft seal, NBR	O-ring for seal housing Spring O-ring, NBR Rotating seal ring, carbon O-ring, NBR (LKH 5-80) O-ring, NBR (LKH 85-90) O-ring, NBR Stationary seal ring, SiC O-ring, NBR O-ring, NBR Sec. stationary seal ring, SiC Drive ring Cup (LKH 70 - 90 only)	5 10 11 12 22 22 23 24 27 46 47 48 50	1 1 2 2 1 2 1 1 1 1 1 1 2
LKH-10, LKH-15	6-9611-92-2211				
LKH-20	6-9611-92-2219				
LKH-25, LKH 35, LKH-45	6-9611-92-2227				
LKH-40, LKH-50, LKH-60	6-9611-92-2235				
LKH-70	6-9611-92-2417				
LKH-80	6-9611-92-2852				
LKH-85	6-9611-92-2961				
LKH-90	6-9611-92-2876				

1.0tf502114.en

Pump size	Spare parts Article No.	Description	Included parts	Pos.	Qty.
LKH-5	6-9611-92-2324	Service kit, double mechanical shaft seal, FPM	O-ring for seal housing Spring O-ring, FPM Rotating seal ring, carbon O-ring, FPM O-ring, FPM Stationary seal ring, SiC O-ring, FPM O-ring, FPM Sec. stationary seal ring, SiC Drive ring Cup (LKH 70 only)	5 10 11 12 22 23 24 27 46 47 48 50	1 1 2 2 1 1 1 1 1 1 1 2
LKH-10, LKH-15	6-9611-92-2212				
LKH-20	6-9611-92-2220				
LKH-25, LKH 35, LKH-45	6-9611-92-2228				
LKH-40, LKH-50, LKH-60	6-9611-92-2236				
LKH-70	6-9611-92-2418				
LKH-5	6-9611-92-2325	Service kit, double mechanical shaft seal, FEP	O-ring for seal housing Spring O-ring, FEP Rotating seal ring, carbon O-ring, FEP (LKH 5-80) O-ring, FEP (LKH 85-90) O-ring, FEP Stationary seal ring, SiC O-ring, FEP O-ring, FEP Sec. stationary seal ring, SiC Drive ring Cup (LKH 70 - 90 only)	5 10 11 12 22 22 23 24 27 46 47 48 50	1 1 2 2 1 2 1 1 1 1 1 1 2
LKH-10, LKH-15	6-9611-92-2213				
LKH-20	6-9611-92-2221				
LKH-25, LKH 35, LKH-45	6-9611-92-2229				
LKH-40, LKH-50, LKH-60	6-9611-92-2237				
LKH-70	6-9611-92-2419				
LKH-85	6-9611-92-2963				
LKH-90	6-9611-92-2878				

1.0tf502114.en

LKH 5 - 60, SiC/SiC

Pump size	Spare parts Article No.	Description	Included parts	Pos.	Qty.
LKH-5	6-9611-92-2522	Service kit, single shaft seal, EPDM (standard)	Spring O-ring, EPDM Rotating seal ring, SiC O-ring, EPDM O-ring, EPDM Stationary seal ring, SiC	10 11 12 22 23 24	1 1 1 1 1 1
LKH-10, LKH-15	6-9611-92-2546				
LKH-20	6-9611-92-2570				
LKH-25, LKH 35, LKH-45	6-9611-92-2594				
LKH-40, LKH-50, LKH-60	6-9611-92-2619				
LKH-5	6-9611-92-2523	Service kit, single shaft seal, NBR	Spring O-ring, NBR Rotating seal ring, SiC O-ring, NBR O-ring, NBR Stationary seal ring, SiC	10 11 12 22 23 24	1 1 1 1 1 1
LKH-10, LKH-15	6-9611-92-2547				
LKH-20	6-9611-92-2571				
LKH-25, LKH 35, LKH-45	6-9611-92-2595				
LKH-40, LKH-50, LKH-60	6-9611-92-2620				

Spare parts

Pump size	Spare parts Article No.	Description	Included parts	Pos.	Qty.
LKH-5	6-9611-92-2524	Service kit, single shaft seal, FPM	Spring O-ring, FPM Rotating seal ring, SiC O-ring, FPM O-ring, FPM Stationary seal ring, SiC	10 11 12 22 23 24	1 1 1 1 1 1
LKH-10, LKH-15	6-9611-92-2548				
LKH-20	6-9611-92-2572				
LKH-25, LKH 35, LKH-45	6-9611-92-2596				
LKH-40, LKH-50, LKH-60	6-9611-92-2621				
LKH-5	6-9611-92-2525	Service kit, single shaft seal, FEP	Spring O-ring, FEP Rotating seal ring, SiC O-ring, FEP O-ring, FEP Stationary seal ring, SiC	10 11 12 22 23 24	1 1 1 1 1 1
LKH-10, LKH-15	6-9611-92-2549				
LKH-20	6-9611-92-2573				
LKH-25, LKH 35, LKH-45	6-9611-92-2597				
LKH-40, LKH-50, LKH-60	6-9611-92-2622				
LKH-5	6-9611-92-2530	Service kit, flushed shaft seal, EPDM (standard)	Lip seal O-ring for seal housing O-ring for drive ring Spring O-ring, EPDM Rotating seal ring, SiC O-ring, EPDM O-ring, EPDM Stationary seal ring, SiC	4 5 6 10 11 12 22 23 24	1 1 1 1 1 1 1 1 1
LKH-10, LKH-15	6-9611-92-2554				
LKH-20	6-9611-92-2578				
LKH-25, LKH 35, LKH-45	6-9611-92-2602				
LKH-40, LKH-50, LKH-60	6-9611-92-2627				
LKH-5	6-9611-92-2531	Service kit, flushed shaft seal, NBR	Lip seal O-ring for seal housing O-ring for drive ring Spring O-ring, NBR Rotating seal ring, SiC O-ring, NBR O-ring, NBR Stationary seal ring, SiC	4 5 6 10 11 12 22 23 24	1 1 1 1 1 1 1 1 1
LKH-10, LKH-15	6-9611-92-2555				
LKH-20	6-9611-92-2579				
LKH-25, LKH 35, LKH-45	6-9611-92-2603				
LKH-40, LKH-50, LKH-60	6-9611-92-2628				
LKH-5	6-9611-92-2532	Service kit, flushed shaft seal, FPM	Lip seal O-ring for seal housing O-ring for drive ring Spring O-ring, FPM Rotating seal ring, SiC O-ring, FPM O-ring, FPM Stationary seal ring, SiC	4 5 6 10 11 12 22 23 24	1 1 1 1 1 1 1 1 1
LKH-10, LKH-15	6-9611-92-2556				
LKH-20	6-9611-92-2580				
LKH-25, LKH 35, LKH-45	6-9611-92-2604				
LKH-40, LKH-50, LKH-60	6-9611-92-2629				
LKH-5	6-9611-92-2533	Service kit, flushed shaft seal, FEP	Lip seal O-ring for seal housing O-ring for drive ring Spring O-ring, FEP Rotating seal ring, SiC O-ring, FEP (LKH 5-80) O-ring, FEP (LKH 85-90) O-ring, FEP Stationary seal ring, SiC	4 5 6 10 11 12 22 22 23 24	1 1 1 1 1 1 1 2 1 1
LKH-10, LKH-15	6-9611-92-2557				
LKH-20	6-9611-92-2581				
LKH-25, LKH 35, LKH-45	6-9611-92-2605				
LKH-40, LKH-50, LKH-60	6-9611-92-2630				

1.0tf502114.en

Pump size	Spare parts Article No.	Description	Included parts	Pos.	Qty.
LKH-5	6-9611-92-2538	Service kit, double mechanical shaft seal, EPDM (standard)	O-ring for seal housing Spring O-ring, EPDM Rotating seal ring, SiC O-ring, EPDM O-ring, EPDM Stationary seal ring, SiC O-ring, EPDM Sec. stationary seal ring, SiC Drive ring	5 10 11 12 22 23 24 46 47 48	1 1 2 2 1 1 1 1 1 1
LKH-10, LKH-15	6-9611-92-2562				
LKH-20	6-9611-92-2586				
LKH-25, LKH 35, LKH-45	6-9611-92-2610				
LKH-40, LKH-50, LKH-60	6-9611-92-2635				
LKH-5	6-9611-92-2539	Service kit, double mechanical shaft seal, NBR	O-ring for seal housing Spring O-ring, NBR Rotating seal ring, SiC O-ring, NBR O-ring, NBR Stationary seal ring, SiC O-ring, NBR Sec. stationary seal ring, SiC Drive ring	5 10 11 12 22 23 24 46 47 48	1 1 2 2 1 1 1 1 1 1
LKH-10, LKH-15	6-9611-92-2563				
LKH-20	6-9611-92-2587				
LKH-25, LKH 35, LKH-45	6-9611-92-2611				
LKH-40, LKH-50, LKH-60	6-9611-92-2636				
LKH-5	6-9611-92-2540	Service kit, double mechanical shaft seal, FPM	O-ring for seal housing Spring O-ring, FPM Rotating seal ring, SiC O-ring, FPM O-ring, FPM Stationary seal ring, SiC O-ring, FPM Sec. stationary seal ring, SiC Drive ring	5 10 11 12 22 23 24 46 47 48	1 1 2 2 1 1 1 1 1 1
LKH-10, LKH-15	6-9611-92-2564				
LKH-20	6-9611-92-2588				
LKH-25, LKH 35, LKH-45	6-9611-92-2612				
LKH-40, LKH-50, LKH-60	6-9611-92-2637				
LKH-5	6-9611-92-2541	Service kit, double mechanical shaft seal, FEP	O-ring for seal housing Spring O-ring, FEP Rotating seal ring, SiC O-ring, FEP O-ring, FEP Stationary seal ring, SiC O-ring, FEP Sec. stationary seal ring, SiC Drive ring	5 10 11 12 22 23 24 46 47 48	1 1 2 2 1 1 1 1 1 1
LKH-10, LKH-15	6-9611-92-2565				
LKH-20	6-9611-92-2589				
LKH-25, LKH 35, LKH-45	6-9611-92-2613				
LKH-40, LKH-50, LKH-60	6-9611-92-2638				

1.0tf502114.en

LKH 5 - 90, SiC/SiC, impeller screw

Pump size	Spare parts Article No.	Description	Included parts	Pos.	Qty.
LKH-5	6-9611-92-2526	Service kit, single shaft seal, EPDM (standard)	Spring O-ring, EPDM Rotating seal ring, SiC O-ring, EPDM (LKH 5-80) O-ring, EPDM (LKH 85-90) O-ring, EPDM Stationary seal ring, SiC O-ring, EPDM	10 11 12 22 22 23 24 27	1 1 1 1 2 1 1 1
LKH-10, LKH-15	6-9611-92-2550				
LKH-20	6-9611-92-2574				
LKH-25, LKH 35, LKH-45	6-9611-92-2598				
LKH-30, LKH-40, LKH-50, LKH-60	6-9611-92-2623				
LKH-70	6-9611-92-2643				
LKH-80	6-9611-92-2855				
LKH-85	6-9611-92-2964				
LKH-90	6-9611-92-2879				
LKH-5	6-9611-92-2527	Service kit, single shaft seal, NBR	Spring O-ring, NBR Rotating seal ring, SiC O-ring, NBR (LKH 5-80) O-ring, NBR (LKH 85-90) O-ring, NBR Stationary seal ring, SiC O-ring, NBR	10 11 12 22 22 23 24 27	1 1 1 1 2 1 1 1
LKH-10, LKH-15	6-9611-92-2551				
LKH-20	6-9611-92-2575				
LKH-25, LKH 35, LKH-45	6-9611-92-2599				
LKH-30, LKH-40, LKH-50, LKH-60	6-9611-92-2624				
LKH-70	6-9611-92-2644				
LKH-80	6-9611-92-2856				
LKH-85	6-9611-92-2965				
LKH-90	6-9611-92-2880				
LKH-5	6-9611-92-2528	Service kit, single shaft seal, FPM	Spring O-ring, FPM Rotating seal ring, SiC O-ring, FPM O-ring, FPM Stationary seal ring, SiC O-ring, FPM	10 11 12 22 23 24 27	1 1 1 1 1 1 1
LKH-10, LKH-15	6-9611-92-2552				
LKH-20	6-9611-92-2576				
LKH-25, LKH 35, LKH-45	6-9611-92-2600				
LKH-30, LKH-40, LKH-50, LKH-60	6-9611-92-2625				
LKH-70	6-9611-92-2645				
LKH-5	6-9611-92-2529	Service kit, single shaft seal, FEP	Spring O-ring, FEP Rotating seal ring, SiC O-ring, FEP (LKH 5-80) O-ring, FEP (LKH 85-90) O-ring, FEP Stationary seal ring, SiC O-ring, FEP	10 11 12 22 22 23 24 27	1 1 1 1 2 1 1 1
LKH-10, LKH-15	6-9611-92-2553				
LKH-20	6-9611-92-2577				
LKH-25, LKH 35, LKH-45	6-9611-92-2601				
LKH-30, LKH-40, LKH-50, LKH-60	6-9611-92-2626				
LKH-70	6-9611-92-2646				
LKH-85	6-9611-92-2967				
LKH-90	6-9611-92-2882				

1.0tf502114.en

Pump size	Spare parts Article No.	Description	Included parts	Pos.	Qty.
LKH-5	6-9611-92-2534	Service kit, flushed shaft seal, EPDM (standard)	Lip seal O-ring for seal housing O-ring for drive ring Spring O-ring, EPDM Rotating seal ring, SiC O-ring, EPDM (LKH 5-80) O-ring, EPDM (LKH 85-90) O-ring, EPDM Stationary seal ring, SiC O-ring, EPDM	4 5 6 10 11 12 22 22 23 24 27	1 1 1 1 1 1 1 2 1 1 1
LKH-10, LKH-15	6-9611-92-2558				
LKH-20	6-9611-92-2582				
LKH-25, LKH 35, LKH-45	6-9611-92-2606				
LKH-30, LKH-40, LKH-50, LKH-60	6-9611-92-2631				
LKH-70	6-9611-92-2647				
LKH-80	6-9611-92-2859				
LKH-85	6-9611-92-2968				
LKH-90	6-9611-92-2883				
LKH-5	6-9611-92-2535	Service kit, flushed shaft seal, NBR	Lip seal O-ring for seal housing O-ring for drive ring Spring O-ring, NBR Rotating seal ring, SiC O-ring, NBR (LKH 5-80) O-ring, NBR (LKH 85-90) O-ring, NBR Stationary seal ring, SiC O-ring, NBR	4 5 6 10 11 12 22 22 23 24 27	1 1 1 1 1 1 1 2 1 1 1
LKH-10, LKH-15	6-9611-92-2559				
LKH-20	6-9611-92-2583				
LKH-25, LKH 35, LKH-45	6-9611-92-2607				
LKH-30, LKH-40, LKH-50, LKH-60	6-9611-92-2632				
LKH-70	6-9611-92-2648				
LKH-80	6-9611-92-2860				
LKH-85	6-9611-92-2969				
LKH-90	6-9611-92-2884				
LKH-5	6-9611-92-2536	Service kit, flushed shaft seal, FPM	Lip seal O-ring for seal housing O-ring for drive ring Spring O-ring, FPM Rotating seal ring, SiC O-ring, FPM O-ring, FPM Stationary seal ring, SiC O-ring, FPM	4 5 6 10 11 12 22 23 24 27	1 1 1 1 1 1 1 1 1 1
LKH-10, LKH-15	6-9611-92-2560				
LKH-20	6-9611-92-2584				
LKH-25, LKH 35, LKH-45	6-9611-92-2608				
LKH-30, LKH-40, LKH-50, LKH-60	6-9611-92-2633				
LKH-70	6-9611-92-2649				
LKH-5	6-9611-92-2537	Service kit, flushed shaft seal, FEP	Lip seal O-ring for seal housing O-ring for drive ring Spring O-ring, FEP Rotating seal ring, SiC O-ring, FEP (LKH 5-80) O-ring, FEP (LKH 85-90) O-ring, FEP Stationary seal ring, SiC O-ring, FEP	4 5 6 10 11 12 22 22 23 24 27	1 1 1 1 1 1 1 2 1 1 1
LKH-10, LKH-15	6-9611-92-2561				
LKH-20	6-9611-92-2585				
LKH-25, LKH 35, LKH-45	6-9611-92-2609				
LKH-30, LKH-40, LKH-50, LKH-60	6-9611-92-2634				
LKH-70	6-9611-92-2650				
LKH-85	6-9611-92-2971				
LKH-90	6-9611-92-2886				

1.0tf502114.en

Spare parts

Pump size	Spare parts Article No.	Description	Included parts	Pos.	Qty.
LKH-5	6-9611-92-2542	Service kit, double mechanical shaft seal, EPDM (standard)	O-ring for seal housing Spring O-ring, EPDM Rotating seal ring, SiC O-ring, EPDM (LKH 5-80) O-ring, EPDM (LKH 85-90) O-ring, EPDM Stationary seal ring, SiC O-ring, EPDM O-ring, EPDM Sec. stationary seal ring, SiC Drive ring Cup (LKH 70 - 90 only)	5 10 11 12 22 22 23 24 27 46 47 48 50	1 1 2 2 1 2 1 1 1 1 1 1 2
LKH-10, LKH-15	6-9611-92-2566				
LKH-20	6-9611-92-2590				
LKH-25, LKH 35, LKH-45	6-9611-92-2614				
LKH-40, LKH-50, LKH-60	6-9611-92-2639				
LKH-70	6-9611-92-2651				
LKH-80	6-9611-92-2863				
LKH-85	6-9611-92-2972				
LKH-90	6-9611-92-2887				
LKH-5	6-9611-92-2543	Service kit, double mechanical shaft seal, NBR	O-ring for seal housing Spring O-ring, NBR Rotating seal ring, SiC O-ring, NBR (LKH 5-80) O-ring, NBR (LKH 85-90) O-ring, NBR Stationary seal ring, SiC O-ring, NBR O-ring, NBR Sec. stationary seal ring, SiC Drive ring Cup (LKH 70 - 90 only)	5 10 11 12 22 22 23 24 27 46 47 48 50	1 1 2 2 1 2 1 1 1 1 1 1 2
LKH-10, LKH-15	6-9611-92-2567				
LKH-20	6-9611-92-2591				
LKH-25, LKH 35, LKH-45	6-9611-92-2615				
LKH-40, LKH-50, LKH-60	6-9611-92-2640				
LKH-70	6-9611-92-2652				
LKH-80	6-9611-92-2864				
LKH-85	6-9611-92-2973				
LKH-90	6-9611-92-2888				
LKH-5	6-9611-92-2544	Service kit, double mechanical shaft seal, FPM	O-ring for seal housing Spring O-ring, FPM Rotating seal ring, SiC O-ring, FPM O-ring, FPM Stationary seal ring, SiC O-ring, FPM O-ring, FPM Sec. stationary seal ring, SiC Drive ring Cup (LKH 70 only)	5 10 11 12 22 23 24 27 46 47 48 50	1 1 2 2 1 1 1 1 1 1 1 2
LKH-10, LKH-15	6-9611-92-2568				
LKH-20	6-9611-92-2592				
LKH-25, LKH 35, LKH-45	6-9611-92-2616				
LKH-40, LKH-50, LKH-60	6-9611-92-2641				
LKH-70	6-9611-92-2653				
LKH-5	6-9611-92-2545	Service kit, double mechanical shaft seal, FEP	O-ring for seal housing Spring O-ring, FEP Rotating seal ring, SiC O-ring, FEP (LKH 5-80) O-ring, FEP (LKH 85-90) O-ring, FEP Stationary seal ring, SiC O-ring, FEP O-ring, FEP Sec. stationary seal ring, SiC Drive ring Cup (LKH 70 - 90 only)	5 10 11 12 22 22 23 24 27 46 47 48 50	1 1 2 2 1 2 1 1 1 1 1 1 2
LKH-10, LKH-15	6-9611-92-2569				
LKH-20	6-9611-92-2593				
LKH-25, LKH 35, LKH-45	6-9611-92-2617				
LKH-40, LKH-50, LKH-60	6-9611-92-2642				
LKH-70	6-9611-92-2654				
LKH-85	6-9611-92-2975				
LKH-90	6-9611-92-2890				

1.0tf502114.en

Spare parts

LKHSP

LKHSP

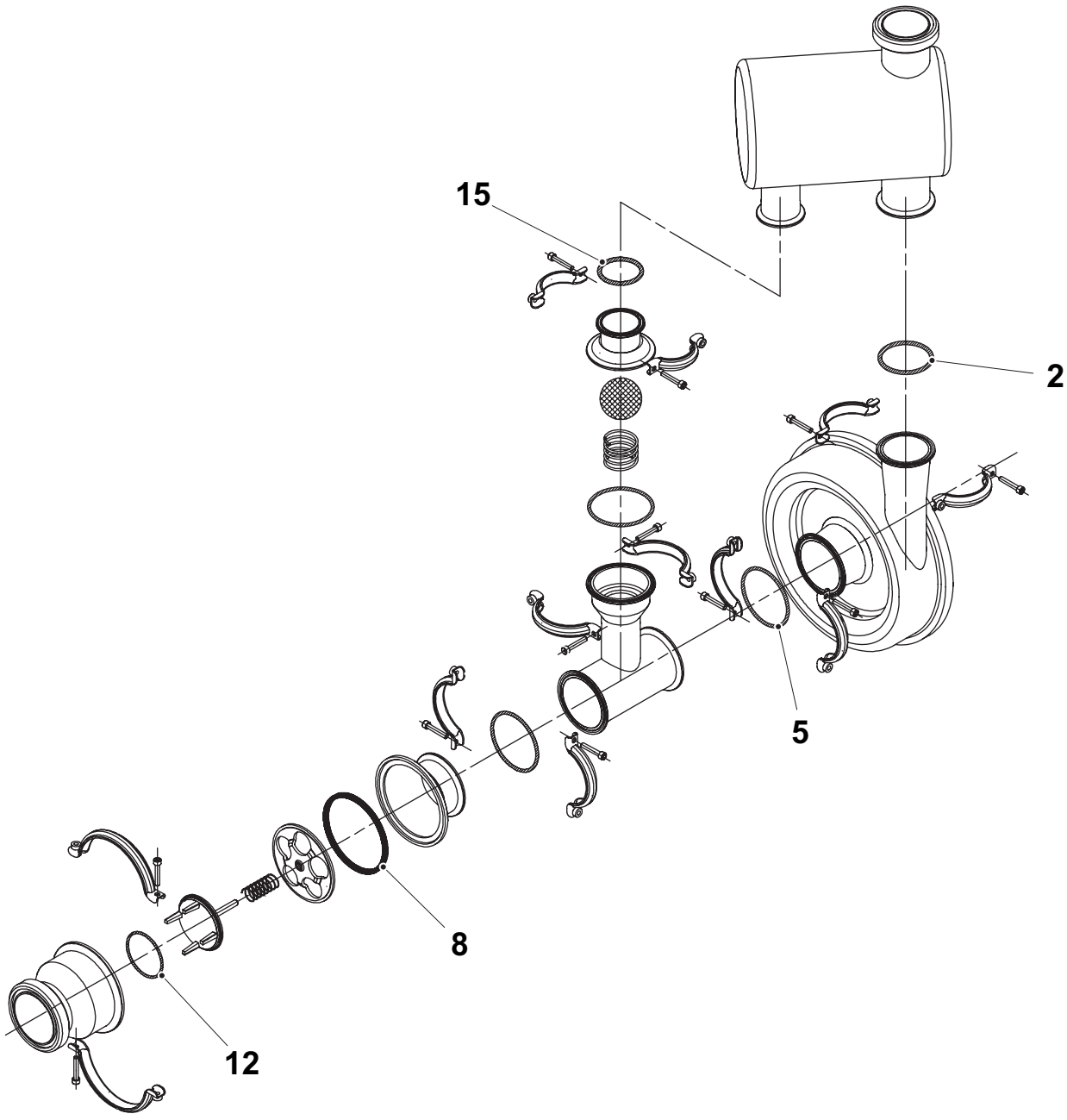

1.0tf502114.en

Non-specified information is identical with the data for the standard LKH pump.

Spare parts Article No.	Description	Included parts	Pos.	Qty.
6-9611-92-2248	Spare part kit, LKHSP-10, 20, 35, EPDM	Seal ring Seal ring Seal ring O-ring Seal ring	2 5 8 12 15	1 1 1 1 1
6-9611-92-2249	Spare part kit, LKHSP-10, 20, 35, NBR	Seal ring Seal ring Seal ring O-ring Seal ring	2 5 8 12 15	1 1 1 1 1
6-9611-92-2250	Spare part kit, LKHSP-10, 20, 35, FPM	Seal ring Seal ring Seal ring O-ring Seal ring	2 5 8 12 15	1 1 1 1 1
6-9611-92-2251	Spare part kit, LKHSP-25, 40, EPDM	Seal ring Seal ring Seal ring O-ring Seal ring	2 5 8 12 15	1 1 1 1 1
6-9611-92-2252	Spare part kit, LKHSP-25, 40, NBR	Seal ring Seal ring Seal ring O-ring Seal ring	2 5 8 12 15	1 1 1 1 1
6-9611-92-2253	Spare part kit, LKHSP-25, 40, FPM	Seal ring Seal ring Seal ring O-ring Seal ring	2 5 8 12 15	1 1 1 1 1

1.0tf502114.en

This page intentionally left blank

1.0tf502114.en

Tetra Pak

Maintenance & Spare Parts

Vacuum pump

(SIHI)

LEMA/LEMB with IE2/IE3 Motors

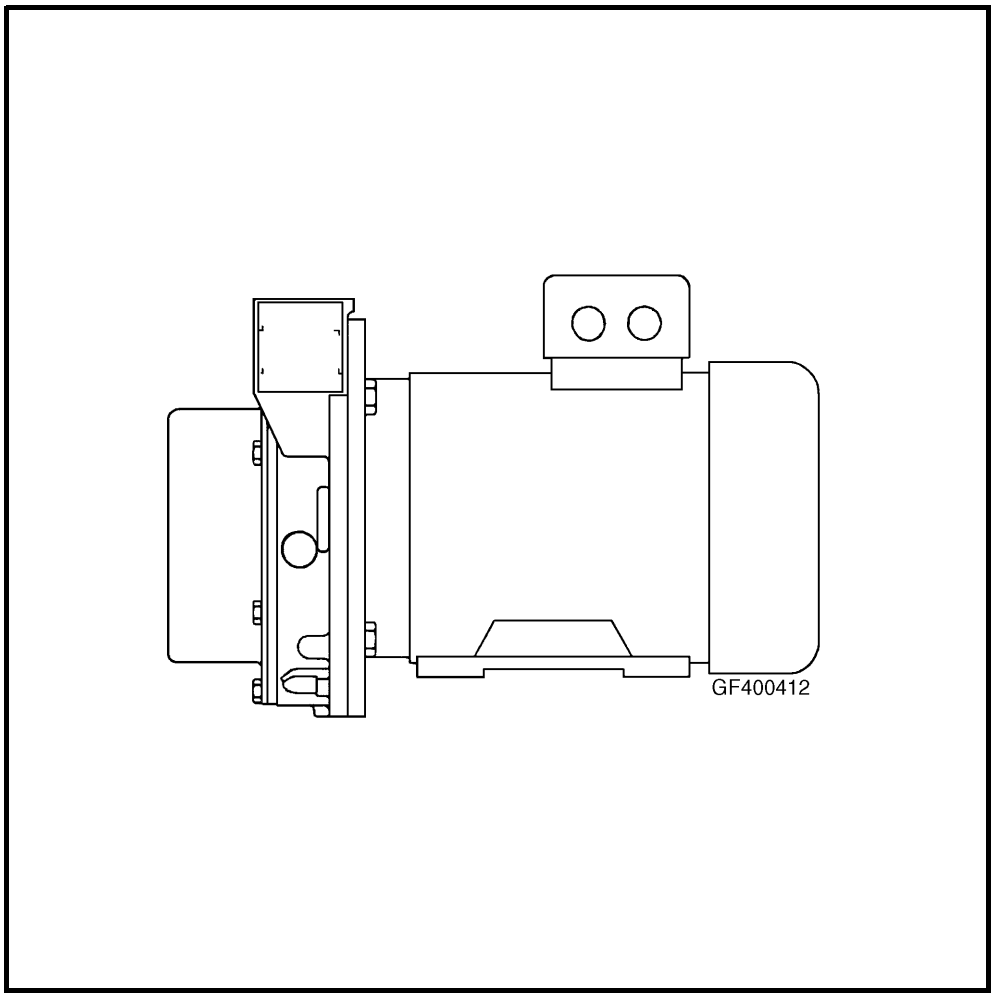

2.21229146-0101.fro

Tetra Pak

Doc No. 1229146-0101

Vacuum pump

LEMA/LEMB with IE2/IE3 Motors

50 Hz

Article No.	Type	Capacity at 80 mbar (ABS)	Power	Max, admis-sible temp.	Motor	Impeller	Housing
6-31801-9594-1	LEMA 26	15 m^3/h	3X230/400V	80°C	0.75 kW	SS 304	GG
90513-4581	LEMA 51	35 m^3/h	230/400V	80°C	1.5 kW	SS 316	GG
90513-4582	LEMA 51	35 m^3/h	230/400V	80°C	1.5 kW	SS 304	GG
90513-4583	LEMB 91	48 m^3/h	230/400V	80°C	2.2 kW	SS 304	GG
90513-4585	LEMB 91	48 m^3/h	230/400V	80°C	2.2 kW	SS 316	GG
90513-4587	LEMB 91	48 m^3/h	230/400V	80°C	2.2 kW	SS 316	SS 316
90519-0569	LEMB 91	48 m^3/h	230/400V	80°C	2.75/ 3.3 kW	SS 316	GG
90513-4589	LEMB 126	72 m^3/h	200/400V	80°C	3 kW	SS 304	GG
90524-2068	LEMB 126	72 m^3/h	200/400V	80°C	3 kW	SS 304	GG
90513-4591	LEMB 126	72 m^3/h	200/400V	80°C	3 kW	SS 316	GG
90513-4593	LEMB 126	72 m^3/h	200/400V	80°C	3 kW	SS 316	SS 316
90513-4595	LEMB 161	120 m^3/h	400/690V	80°C	4.0 kW	SS 304	GG
90513-4597	LEMB 161	120 m^3/h	400/690V	80°C	4.0 kW	SS 316	GG
90513-4599	LEMB 161	120 m^3/h	400/690V	80°C	4.0 kW	SS 316	SS 316
90513-4601	LEMA 251	220 m^3/h	400/690V	80°C	5.5 kW	SS 304	GG
90513-4603	LEMA 251	220 m^3/h	400/690V	80°C	5.5 kW	SS 316	GG
90513-4605	LEMA 251	220 m^3/h	400/690V	80°C	5.5 kW	SS 316	SS 316

2.21229146-0101.fro

Version 05 Issue 2016-12

Doc No. 1229146-0101

Tetra Pak

Tetra Pak Processing Systems AB

50/60 Hz

Article No.	Type	Capacity at 80 mbar (ABS)	Power	Max, admis-sible temp.	Motor	Impeller	Housing
90503-2788	LEMA 26	15 m^3/h	346-480V	80°C	1.1 kW	SS 304	GG
90513-4579	LEMA 51	35 m^3/h	230/400V-265/460V	80°C	1.8/2.2 kW	SS 316	GG
90513-4580	LEMA 51	35 m^3/h	230/400V-265/460V	80°C	1.8/2.2 kW	SS 316	SS 316
90515-8960	LEMB 91	48 m^3/h	230/400V-265/460V	80°C	2.75/3.3 kW	SS 316	SS 316
90513-4584	LEMB 91	48 m^3/h	230/400V-265/460V	80°C	2.75/3.3 kW	SS 304	GG
90513-4586	LEMB 91	48 m^3/h	230/400V-265/460V	80°C	2.75/3.3 kW	SS 316	GG
90513-4588	LEMB 91	48 m^3/h	230/400V-265/460V	80°C	2.75/3.3 kW	SS 316	SS 316
90513-4590	LEMB 126	72 m^3/h	230/400V-265/460V	80°C	4.0/4.8 kW	SS 304	GG
90513-4592	LEMB 126	72 m^3/h	230/400V-265/460V	80°C	4.0/4.8 kW	SS 316	GG
90513-4594	LEMB 126	72 m^3/h	230/400V-265/460V	80°C	4.0/4.8 kW	SS 316	SS 316
90513-4596	LEMB 161	120 m^3/h	400/690-460V	80°C	5.0/6.0 kW	SS 304	GG
90513-4598	LEMB 161	120 m^3/h	400/690-460V	80°C	5.0/6.0 kW	SS 316	GG
90513-4600	LEMB 161	120 m^3/h	400/690-460V	80°C	5.0/6.0 kW	SS 316	SS 316
90513-4602	LEMA 251	220 m^3/h	400/690-460V	80°C	6.7/8.0 kW	SS 304	GG
90513-4604	LEMA 251	220 m^3/h	400/690-460V	80°C	6.7/8.0 kW	SS 316	GG
90513-4606	LEMA 251	220 m^3/h	380-480V	80°C	8.0 kW	SS 316	SS 316
90513-4607	LEMA 325	200 m^3/h	400/690-460V	80°C	11/13.2 kW	SS 316	GG
90513-4608	LEMA 325	200 m^3/h	400/690-460V	80°C	11/13.2 kW	SS 316	SS 316
90513-4609	LEMA 425	250 m^3/h	400/690-460V	80°C	15/18 kW	SS 316	GG
90513-4610	LEMA 425	250 m^3/h	400/690-460V	80°C	15/18 kW	SS 316	SS 316
90521-1223	LEMA 325	200 m^3/h	380-420D/660-725Y 60Hz 440-480Y	80°C	11/12 kW	SS 316	GG
90521-1224	LEMA 325	200 m^3/h	380-420D/660-725Y 60Hz 440-480Y	80°C	11/12 kW	SS 316	SS 316
90521-1225	LEMA 251	250 m^3/h	380-420D/660-725Y 60Hz 440-480Y	80°C	11 kW	SS 316	SS 316
90521-1226	LEMA 425	250 m^3/h	380-420D/660-725Y 60Hz 440-480Y	80°C	15/18 kW	SS 316	SS 316
90521-1227	LEMA 425	250 m^3/h	380-420D/660-725Y 60Hz 440-480Y	80°C	15/18 kW	SS 316	GG

2.21229146-0101.fro

This page intentionally left blank

2.21229146-0101.fro

Table of contents

Maintenance 1

General 1

Mechanical seal 2

Check. 2

Change. 3

Difference in temperature and technical data 7

Spare parts 11

1.0 1229146-0101.TOC

This page intentionally left blank

Maintenance

General

A multiplied impeller is mounted eccentrically in a circular casing. When the casing is partially filled with liquid and the impeller is set into rotary motion, a liquid ring is formed as a result of centrifugal force. Due to the eccentricity, the liquid ring creates a piston action within each set of the impeller blades, causing flow in and out of the impeller blade cells. This flow occurs with each revolution of the impeller and results in a volumetric expansion in the section of the out-flowing liquid ring, thus causing the medium to be drawn in via the inlet port in the guide plate connected to the suction nozzle. In the area of the in-flowing liquid ring, the volume is reduced, thus causing the media to be compressed. On the completion of compression, the medium is discharged via the outlet port in the guide plate connected to the discharge.

Note! Continuously during operation the pump has to be supplied with service liquid, (normally water). Production of heat is a result of the gas compression. The heat is absorbed by the service liquid, and is removed by the service liquid leaving the pump together with the gas.

Caution! Never start up the pump when the discharge line is closed.

Caution! Always set safety switch in off position when performing maintenance.

2.2tf508241.en

Mechanical seal

Check

DANGER!

Risk of electrical shock!
Risk of entanglement!
Always disconnect supply circuits prior to changing any parts.

WARNING!

Risk of injury!
Make sure before dismantling, that the pipeline is drained and free from media.

Check mechanical seal for leakage. If there is a leakage at (A), the mechanical seal has to be replaced.

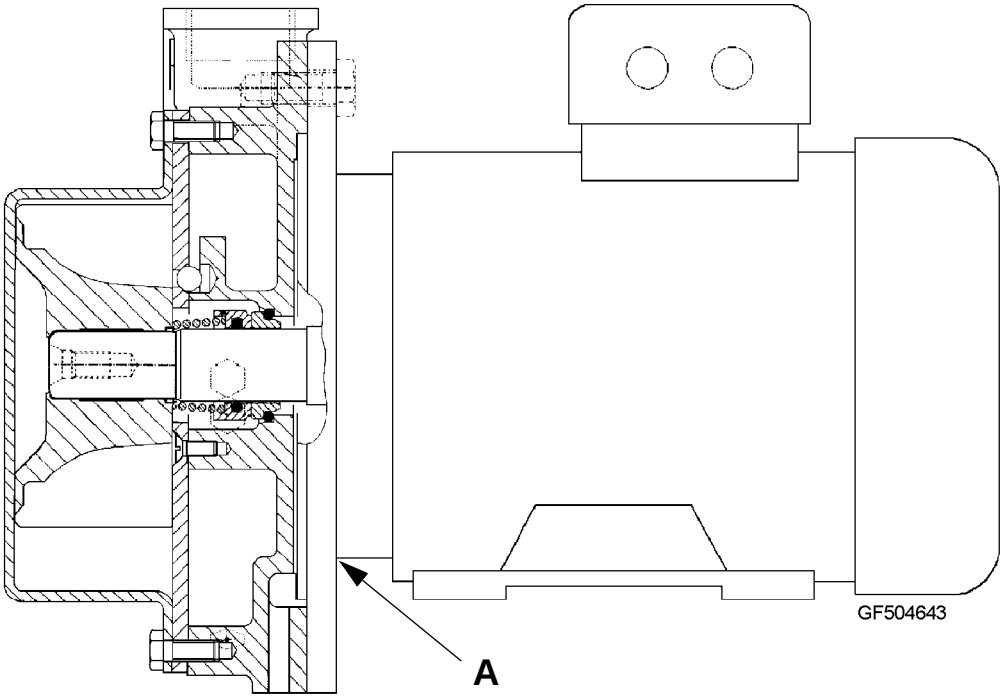

2.2tf508241.en

Change

DANGER!

Risk of electrical shock!
Risk of entanglement!
Always disconnect supply circuits prior to changing any parts.

WARNING!

Risk of injury!
Make sure before dismantling, that the pipeline is drained and free from media.

Thread	M6	M8	M10	M12
Tightening Torque Nm	8.5	12	25	40

Disassemble

a) Switch off the power.

b) Disconnect the inlet and outlet product pipes.

c) Unscrew the hexagon nuts (1), remove the cover (2) and separate the bearing cover from the guide disc (6) and from the casing (3).

d) Remove the vane-wheel impeller (10) with an extractor consisting of a flat bar (12) and screws as shown below.

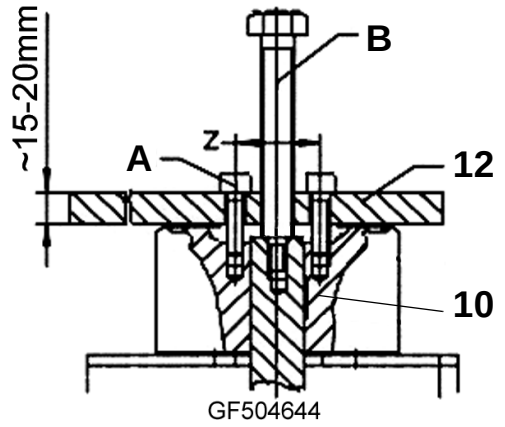

10 Impeller
12 Flat bar

	A	B	Z (mm)
LEMB 91/126	M8x35	M16x90	45
LEMB 161	M8x45	M16x90	66

e) Remove the tolerance sleeve (11) from the vane-wheel impeller (10).

(Cont'd)

2.2tf508241.en

(Cont'd)

f) Unscrew the hexagon screw (5). Separate the guide disc (6) from the casing (3) using a screw driver to be pushed into the centring groove (arrow) between the guide disc and the casing (these parts can be slightly glued to each other).

g) Remove the ball valves (7) from the casing.

h) Remove the mechanical seal (8) using a slightly rotary motion from the motor shaft end.

i) Unscrew the hexagon screw (9). Separate the casing from the motor flange by a slight blow at a free edge.

j) Carefully remove the stationary seal rings from the casing.

1 Hexagon nut
2 Cover
3 Casing
4 Motor
5 Hexagon screw
6 Guide disc
7 Ball valve
8 Seal
9 Hexagon screw
10 Impeller
11 Tolerance sleeve

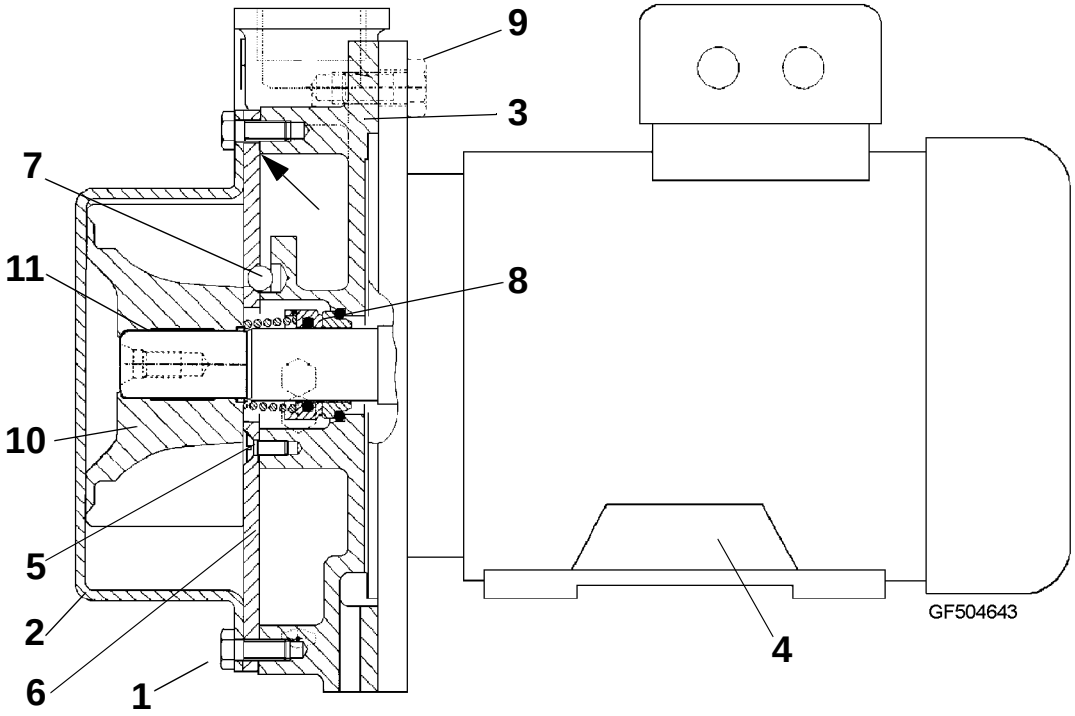

2.2tf508241.en

Assemble LEMA 25 / 50

Change spare parts when necessary.

a) Clean all pump parts carefully; pay attention to the fact that the sealing surfaces have no grooves and that the guide disc is plane.

b) Change all parts included in the service kit.

c) Coat the running surface of the guide disc as well as threads and fittings (except sealing fittings) with Molycote sliding paste.

(Cont'd)

(Cont'd)

d) Fit carefully the stationary seal rings (8) in the casing (3).

e) Fit the casing with the hexagon screw (9) to the motor flange (4).

f) Slip on rotating parts of the mechanical seal (8) on the motor shaft end and place the key into the groove on the shaft.

g) Fit the ball valves (7) into the bores of the casing (3).

h) Coat the sealing surfaces at the casing (3) with liquid sealing compound.

i) When fitting the guide disc (6), observe the correct position of the valve bores towards the ball valves (7).

j) Fit the guide disc (6) with the hexagon screw (5) to the casing (3).

k) Secure the guide disc (6) by tightening the hexagon nuts (1) to the casing.

l) Coat the threads of the adjusting screw with liquid sealing compound and change the washer. Screw the adjusting screw onto the shaft end.

m) Change and fit the tolerance sleeve (11) inside the vane-wheel impeller (10).

n) Fit the vane-wheel impeller (10) on the motor shaft end.

o) Tighten the flat bar steel (12) by two screws (A) to the vane-wheel impeller (10).

p) Screw strongly into the motorshaft the screw (C) and the nut (D) with a suitable washer (E, min. outer Ø20).

q) Press the flat bar steel, with the vane-wheel impeller fastened to it, on the shaft end by screwing down the nut (D) until the required distance of the gap between vane-wheel impeller and guide disc will be achieved (0.10-0.12 mm).

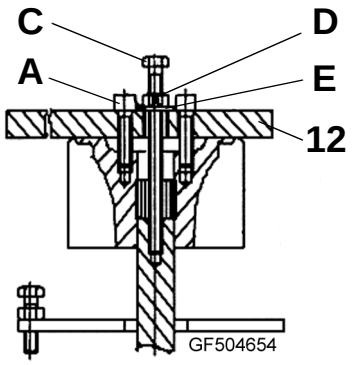

12 Flat bar

Type	A	C	D
LEMB 91/126	M8x35	M10x105	M10
LEMB 161	M8x45	M12x140	M12

(Cont'd)

2.2tf508241.en

(Cont'd)

r) Unscrew the hexagon nut (1) from the casing (3). Coat the sealing surfaces at the cover (2) with liquid sealing compound.

s) Fit the cover on the guide disc (6) in such a way that the name printed on the cover is legible in horizontal assembly.

t) Tighten the hexagon nut (1) crosswise.

Assemble LEM. 90 / 125 / 150 / 250 / 325 / 425

a) Put the stationary seal ring of the mechanical seal into the location bore of the central body.

b) Mount the central body to the motor.

c) Screw the adjusting nut into the shaft end. If necessary, slip the spacer on the impeller hub.

d) Slip the rotary seal ring of the mechanical seal on the impeller hub and the impeller on the motor shaft.

e) Mount the impeller with the adjusting nut and the counter nut on to the shaft end so that the impeller is placed back from the central body front edge by the necessary size (front gap).

LEM. 90 / 125 / 150	Front gap 0.15 - 0.175 mm
LEM. 250 / 325 / 425	Front gap 0.15 - 0.20 mm

2.2tf508241.en

The impeller has to be sealed so that the collar of the adjusting nut and the thread towards the motor shaft can be provided with liquid sealing compound. After having tightened the counter nut, check once again the front gap (distance impeller – central body front edge).

f) Put the ball valves (7) into the location bores of the vacuum casing or the guide disc (6). If necessary, fix the valve plate.

g) Provide the sealing surfaces at the vacuum casing with sealing compound. Connect the guide disc (6) and the vacuum casing.

h) Provide the sealing surface at the central body with sealing compound.

i) Put the vacuum casing with the guide disc (6) on the central body.

Pay attention to the right position: The branches show upwards with horizontal assembly. The markings have to align to each other. For the type with pre-arranged separator provide the vacuum casing with sealing compound and put on the pre-arranged separator. Pay attention to the right position of the ribs, they have to lie on top of each other. Tighten steadily crosswise the tie bolts between the vacuum casing or pre-arranged separator and central body.

(Cont'd)

(Cont'd)

Test work

After assembly following test has to be carried out:

- Check the easy running of the pump by rotating the fan.
- Hydrostatic pressure test with water. LEM. 25/50 with 0.5 bar pressure. LEM. 90 - 425 with 3 bar pressure.
- Carry out a motor leakage test (Nekaltest, Insulation test with a Megaohm meter).

Difference in temperature and technical data

Difference in temperature t_B - t_F dependent on make-up waterflow F, suction pressure and speed

Pump		Speed (rpm)	Make-up water flow F - m^3/h			
			Suction pressure 33 mbar			
			Difference in temperature °C			
			10	5	2	0
LEMB	91	2900	0.1	0.17	0.3	0.6
		3500	0.14	0.23	0.36	
	126	2900	0.13	0.22	0.37	0.65
		3500	0.18	0.29	0.43	
	161	1460	0.18	0.31	0.56	1.25
		1750	0.24	0.41	0.68	

(Cont'd)

2.2tf508241.en

(Cont'd)

Pump		Speed (rpm)	Make-up water flow F - m^3/h				
			Suction pressure 200 mbar				
			Difference in temperature °C				
			20	10	5	2	0
LEMB	91	2900	0.07	0.12	0.2	0.31	0.5
		3500	0.1	0.17	0.25	0.36	
	126	2900	0.09	0.15	0.24	0.35	0.52
		3500	0.13	0.2	0.29	0.4	
	161	1460	0.13	0.22	0.37	0.62	1.1
		1750	0.17	0.29	0.45	0.7	

Pump		Speed (rpm)	Make-up water flow F - m^3/h				
			Suction pressure 600 mbar				
			Difference in temperature °C				
			20	10	5	2	0
LEMB	91	2900	0.06	0.1	0.15	0.21	0.28
		3500	0.08	0.13	0.18	0.23	
	126	2900	0.08	0.13	0.19	0.26	0.34
		3500	0.11	0.16	0.22	0.28	
	161	1460	0.11	0.19	0.3	0.47	0.75
		1750	0.15	0.25	0.37	0.54	

2.2tf508241.en

The service liquid B is warmer than the make-up water F by the difference in temperature. The service liquid flow B corresponds to the make-up water flow F when the difference in temperature is 0°C.

(Cont'd)

(Cont'd)

Pump		Speed (rpm)	Make-up water flow F - m^3/h			
			Suction pressure 33 mbar			
			Difference in temperature °C			
			10	5	2	0
LEMA	26	2900	0.04	0.07	0.14	0.39
		3500	0.06	0.10	0.18	
	51	2900	0.07	0.13	0.23	0.48
		3500	0.11	0.17	0.28	
	325	1460	0.31	0.52	0.88	1.6
		1750	0.42	0.67	1.03	
	425	1460	0.46	0.74	1.19	2.0
		1750	0.64	0.97	1.40	

Pump		Speed (rpm)	Make-up water flow F - m^3/h			
			Suction pressure 120 mbar			
			Difference in temperature °C			
			10	5	2	0
LEMA	26	2900	0.05	0.09	0.16	0.36
		3500	0.07	0.11	0.19	
	51	2900	0.09	0.15	0.24	0.42
		3500	0.12	0.19	0.28	
	325	1460	0.40	0.63	0.97	1.5
		1750	0.50	0.75	1.07	
	425	1460	0.56	0.85	1.23	1.75
		1750	0.69	0.99	1.34	

2.2tf508241.en

(Cont'd)

(Cont'd)

Pump		Speed (rpm)	Make-up water flow F - m^3/h			
			Suction pressure 200 mbar			
			Difference in temperature °C			
			10	5	2	0
LEMA	26	2900	0.05	0.09	0.15	0.3
		3500	0.07	0.11	0.18	
	51	2900	0.09	0.14	0.23	0.36
		3500	0.12	0.18	0.26	
	325	1460	0.42	0.65	0.96	1.4
		1750	0.52	0.76	1.05	
	425	1460	0.57	0.84	1.18	1.6
		1750	0.70	0.97	1.27	

Pump		Speed (rpm)	Make-up water flow F - m^3/h			
			Suction pressure 400 mbar			
			Difference in temperature °C			
			10	5	2	0
LEMA	26	2900	0.05	0.08	0.14	0.28
		3500	0.07	0.11	0.18	
	51	2900	0.09	0.14	0.22	0.34
		3500	0.12	0.18	0.25	
	325	1460	0.40	0.60	0.84	1.15
		1750	0.49	0.69	0.91	
	425	1460	0.45	0.60	0.75	0.9
		1750	0.53	0.67	0.79	

2.2tf508241.en

Spare parts

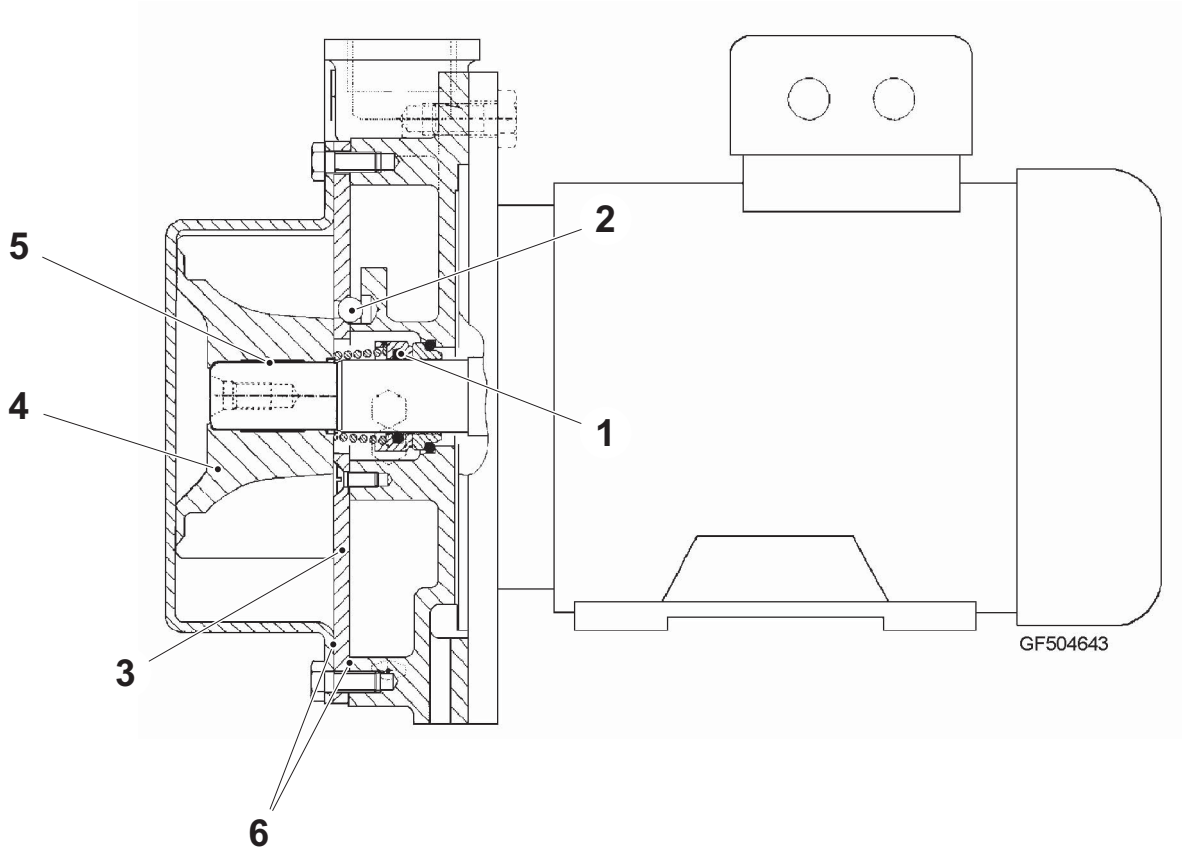

2.2tf508242.en

Component article No.	Spare part Article No.	Description	Included parts	Pos.	Qty.
90513-4583 90513-4584	90511-5092	Spare part kit LEMB91/126 AZ AAE OA/OE O	Mechanical seal Ball valve Glue Tolerance sleeve	1 2 - 5	1 7 1 1
	90511-5094	Spare part kit LEMB 91 AZ AAE OA O	Guide disc. Vane, wheel impeller Tolerance sleeve	3 4 5	1 1 1
90513-4585 90513-4586	90511-5092	Spare part kit LEMB91/126 AZ AAE OA/OE O	Mechanical seal Ball valve Glue Tolerance sleeve	1 2 - 5	1 7 1 1
	90511-5095	Spare part kit LEMB 91 AZ AAE OE O/-AZ AA1 4B 0	Guide disc. Vane, wheel impeller Tolerance sleeve	3 4 5	1 1 1

90513-4587 90513-4588 90515-8960 90519-0569	6-990411-53	Spare part kit LEMB91 126 AZ AA1 4B O	Mechanical seal Ball valve Glue Tolerance sleeve	1 2 - 5	1 7 1 1
	90511-5095	Spare part kit LEMB 91 AZ AAE OE O/-AZ AA1 4B 0	Guide disc. Vane, wheel impeller Tolerance sleeve	3 4 5	1 1 1
90513-4589 90513-4590 90524-2068	90511-5092	Spare part kit LEMB91/126 AZ AAE OA/OE O	Mechanical seal Ball valve Glue Tolerance sleeve	1 2 - 5	1 7 1 1
	90511-5096	Spare part kit LEMB 126 AZ AAE OA O	Guide disc. Vane, wheel impeller Tolerance sleeve	3 4 5	1 1 1
90513-4591 90513-4592	90511-5092	Spare part kit LEMB91/126 AZ AAE OA/OE O	Mechanical seal Ball valve Glue Tolerance sleeve	1 2 - 5	1 7 1 1
	90511-5097	Spare part kit LEMB126 AZ AAE OE O/-AZ AA1 4B 0	Guide disc. Vane, wheel impeller Tolerance sleeve	3 4 5	1 1 1
90513-4593 90513-4594	6-990411-53	Spare part kit LEMB91/126 AZ AA1 4B O	Mechanical seal Ball valve Glue Tolerance sleeve	1 2 - 5	1 7 1 1
	90511-5097	Spare part kit LEMB126 AZ AAE OE O/-AZ AA1 4B 0	Guide disc. Vane, wheel impeller Tolerance sleeve	3 4 5	1 1 1
90513-4595 90513-4596	90511-5093	Spare part kit LEMB161 AZ AAE OA/OE O	Mechanical seal Ball valve Glue Tolerance sleeve	1 2 - 5	1 12 1 1
	90511-5098	Spare part kit LEMB 161 AZ AAE OA O	Guide disc. Vane, wheel impeller Tolerance sleeve	3 4 5	1 1 1
90513-4597 90513-4598	90511-5093	Spare part kit LEMB161 AZ AAE OA/OE O	Mechanical seal Ball valve Glue Tolerance sleeve	1 2 - 5	1 12 1 1
	90511-5099	Spare part kit LEMB161 AZ AAE OE O/-AZ AA1 4B O	Guide disc. Vane, wheel impeller Tolerance sleeve	3 4 5	1 1 1
90513-4599 90513-4600	6-990411-58	Spare part kit LEMB161 AZ AA1 4B O	Mechanical seal Ball valve Glue Tolerance sleeve	1 2 - 5	1 12 1 1
	90511-5099	Spare part kit LEMB161 AZ AAE OE O/-AZ AA1 4B O	Guide disc. Vane, wheel impeller Tolerance sleeve	3 4 5	1 1 1

2.2tf508242.en

90513-4601 90513-4602	90503-2480	Spare part kit LEMA 251 CZ B3N OA 7	Guide disc. Vane, wheel impeller Tolerance sleeve	3 4 5	1 1 2
	90503-2482	Spare part kit LEMA 251 CZ B3N OA/OE 7	Mechanical seal Valve plate O-ring Perbunan Glue Tolerance sleeve	1 - - - 5	1 1 1 1 2
90513-4603 90513-4604	90503-2481	Spare part kit LEMA 251 CZ B3N OE7/BLU4B7	Guide disc. Vane, wheel impeller Tolerance sleeve	3 4 5	1 1 2
	90503-2482	Spare part kit LEMA 251 CZ B3N OA/OE 7	Mechanical seal Valve plate O-ring Perbunan Glue Tolerance sleeve	1 - - - 5	1 1 1 1 2
90513-4605 90513-4606	90503-2481	Spare part kit LEMA 251 CZ B3N OE7/BLU4B7	Guide disc. Vane, wheel impeller Tolerance sleeve	3 4 5	1 1 2
	90503-2483	Spare part kit LEMA 251 CZ BLU 4B 7	Mechanical seal Valve plate O-ring Viton Glue Tolerance sleeve	1 - - - 5	1 1 1 1 2
6-31801-9594-1 90503-2788	90515-6889	Spare part kit LEMA 26 AZ AAE OA/OE 7	Guide disc. Vane, wheel impeller Tolerance sleeve	3 4 5	1 1 2
	90515-6890	Spare part kit LEMA 26 AZ AAE OA 7	Mechanical seal V-ring Ball valve Adjusting screw Silastik	1	1
90513-4579 90513-4581	90515-6900	Spare part kit LEMA 51 AZ AAE OA 7	Guide disc. Vane, wheel impeller Tolerance sleeve	3 4 5	1 1 2
	90515-6902	Spare part kit LEMA 51 AZ AAE 4B 7	Mechanical seal V-ring Ball valve Adjusting screw Silastik	1	1
90513-4582	90515-6890	Spare part kit LEMA 51 AZ AAE OA 7	Mechanical seal V-ring Ball valve Adjusting screw Silastik	1	1
	90515-6899	Spare part kit LEMA 51 AZ AAE OA 7	Guide disc. Vane, wheel impeller Tolerance sleeve	3 4 5	1 1 2

2.2tf508242.en

90513-4580	90515-6901	Spare part kit LEMA 51 AZ AAE 4B 7	Guide disc. Vane, wheel impeller Tolerance sleeve	3 4 5	1 1 2
	90515-6902	Spare part kit LEMA 51 AZ AAE 4B 7	Mechanical seal V-ring Ball valve Adjusting screw Silastik	1	1
90513-4607 90521-1223	90515-6891	Spare part kit LEMA 325 AZ AAE OE O	Mechanical seal V-ring Ball valve Adjusting screw Silastik		
	90515-6892	Spare part kit LEMA 325 AZ AAE OE O	Guide disc. Impeller Tolerance sleeve		
90513-4608 90521-1224	90515-6893	Spare part kit LEMA 325 AZ AA1 4B 0	Mechanical seal V-ring Ball valve Adjusting screw Silastik	1	1
	90515-6894	Spare part kit LEMA 325 AZ AA1 4B 0	Guide disc. Vane, wheel impeller Tolerance sleeve	3 4 5	1 1 2
90513-4609 90521-1227	90515-6895	Spare part kit LEMA 425 AZ AAE OE 4	Mechanical seal V-ring Ball valve Adjusting screw Silastik	1	1
	90515-6896	Spare part kit LEMA 425 AZ AAE OE 0	Guide disc. Vane, wheel impeller Tolerance sleeve	3 4 5	1 1 2
90513-4610 90521-1225 90521-1226	90515-6897	Spare part kit LEMA 425 AZ AA1 4B 0	Mechanical seal V-ring Ball valve Adjusting screw Silastik	1	1
	90515-6898	Spare part kit LEMA 425 AZ AA1 4B 0	Guide disc. Vane, wheel impeller Tolerance sleeve	3 4 5	1 1 2

2.2tf508242.en

This page intentionally left blank

2.2tf508242.en

Tetra Pak

Maintenance & Spare Parts

Air vent valve

(Armatec)
AT8060/AT3537



1.0 1212676-0101.fro

Tetra Pak

Doc No. 1212676-0101

Air vent valve

AT8060/AT3537

Article No.	Type	Connection	Material
90512-7296	PN 10	DN 15	Brass
90512-8240	PN 10	DN 15	AISI 316
90513-8305	PN 10	DN 15	Brass
90513-8306	PN 10	DN 15	AISI 316

1.0 1212676-0101.fro

Version 04 Issue 2012-03

Doc No. 1212676-0101

Tetra Pak

Tetra Pak Processing Systems AB

Maintenance **1**

Check. 1

Change. 2

Spare parts **3**

1.0 1212676-0101.TOC

This page intentionally left blank

Maintenance

Check

WARNING!

Risk of burns!
Make sure before dismantling, that the pipeline is drained and free from media.

The air vent valve is maintenance free.

a) Check the valve for leakage (see arrows on figure below).
b) If the valve is leaking, dismantle the valve (see chapter **Change)**.
c) Wash through and wash off the valve with water.
d) Reassemble the valve and check for leakage (see arrows on figure below).
e) Change the valve if it still leaking (see chapter **Change).**

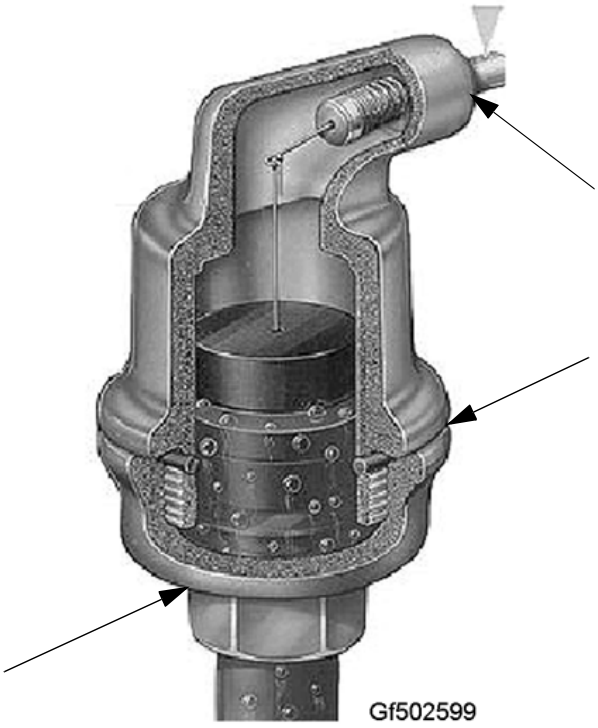

1.0 TF501226.EN

Change

WARNING!

Risk of burns!
Make sure before dismantling, that the pipeline is drained and free from media.

Air vent valve

a) Unscrew the nut (1) on the bottom of the valve (2) with a spanner.
b) Change the air vent valve (2).
c) Reassemble in reverse order.

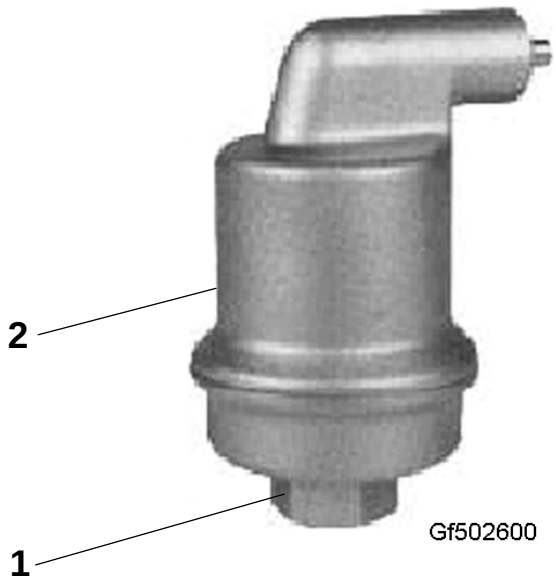

1 Nut
2 Air vent valve

1.0 TF501226.EN

Ball valve

a) Dismantle the air vent valve (see above).
b) Unscrew nuts (3) on ball valve (4) with a spanner.
c) Change ball valve.
d) Reassemble in reverse order, be gentle when mounting the o-ring.

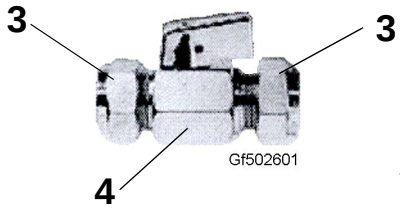

3 Nut
4 Ball valve

Spare parts

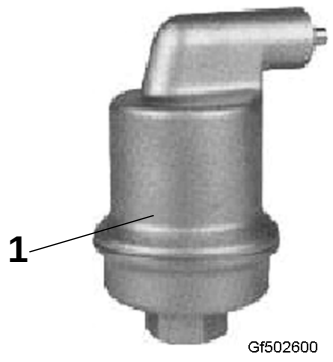

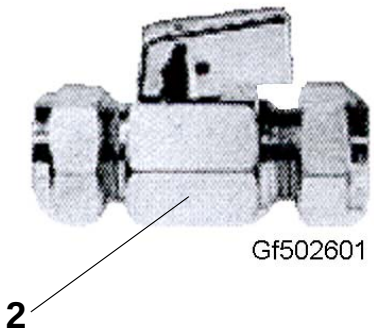

Component article No.	Spare part Article No.	Description	Pos.	Qty.
90512-8240 90513-8306	6-31801-9452-1	Air vent valve	1	1
	90512-8915	Ball valve	2	1
90512-7296 90513-8305	6-31801-9451-1	Air vent valve	1	1
	90512-8915	Ball valve	2	1

1.0 TF501227.EN

Tetra Pak

Maintenance & Spare Parts

Air vent valve

(Spirax Sarco)
MST 21/21H

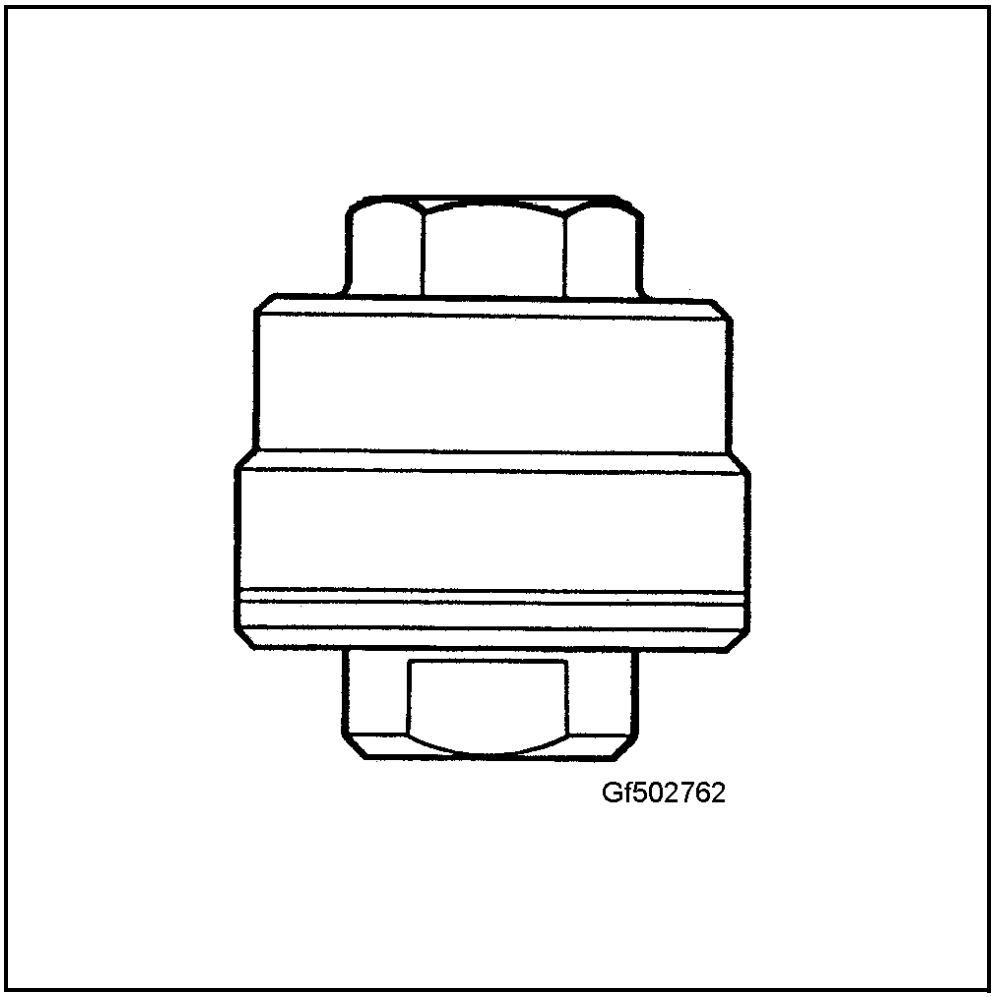

1.0 1212764-0101.fro

Tetra Pak

Doc No. 1212764-0101

Air vent valve

MST 21/21H

Article No.	Type	Connection	Pressure	Capsule
6-31801-9655-1	MST 21	Insided thread 1/2”	PN 25	E
6-31801-9809-1	MST 21	Insided thread 1/2”	PN 25	G
90503-6350	MST 21H	Insided thread 1/2”	PN 25	G
90503-7285	MST 21H	Insided thread 3/4”	PN 25	G
90510-2733	MST 21HF	Insided thread 3/4”	PN 25	G

1.0 1212764-0101.fro

Version 04 Issue 2007-08

Doc No. 1212764-0101

Tetra Pak

Tetra Pak Processing Systems AB

Table of contents

Maintenance 1

Change and check 1

Spare parts 2

1.0 1212764-0101.TOC

This page intentionally left blank

Maintenance

Change and check

WARNING!

Risk of burns!
Make sure before dismantling, that the pipeline is drained and free from steam, condense and media.

Air vent valve

a) Remove the air vent valve (1) from the pipeline.

b) Unscrew cover (2) on top of the air vent valve (1) with a spanner.

c) Separate parts and change the following spare parts: strainer insertion (3) spring (4) capsule (5) distance washer (6) and gasket (7) if necessary.

d) Change the air vent valve (1) if necessary.

e) Reassemble in reverse order.

f) Check for leaking (see arrow on graphic below)

1.0 Tf501322.en

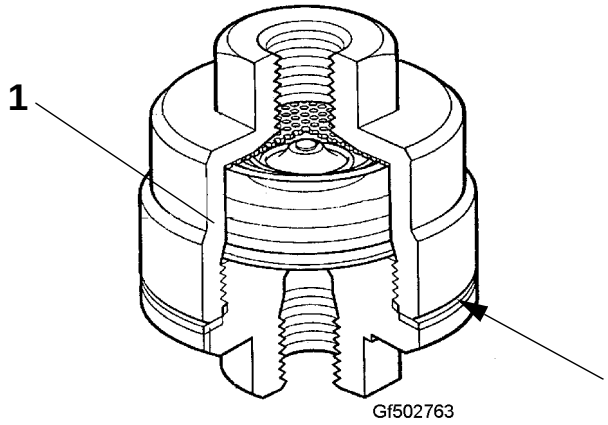

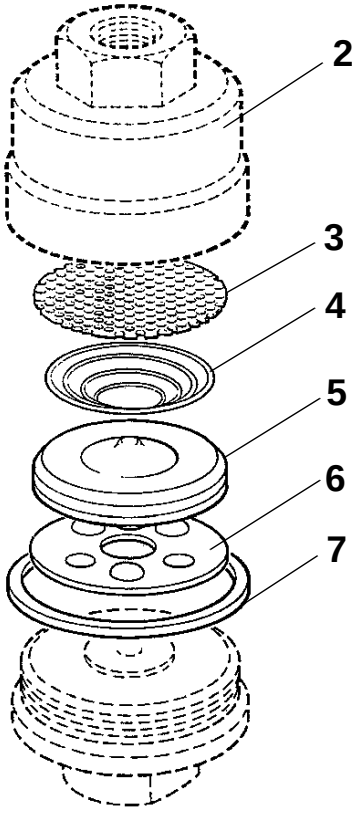

1 Air vent valve
2 Cover
3 Stariner insertion
4 Spring
5 Capsule
6 Distance washer
7 Gasket

Spare parts

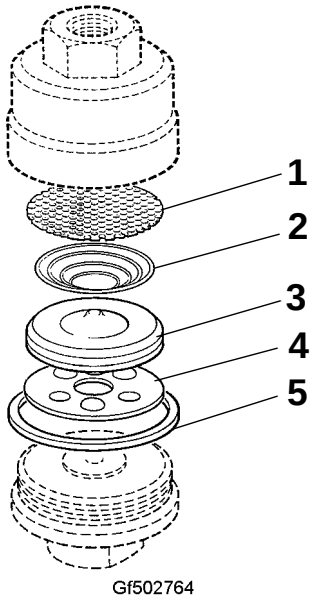

Component article No.	Spare part Article No.	Description	Included parts	Pos.	Qty.
6-31801-9655-1	6-00990419-11	Spare parts kit, E-capsule	Strainer insertion Spring Capsule Distance washer Gasket	1 2 3 4 5	1 1 1 1 1
6-31801-9809-1 90503-6350 90503-7285 90510-2733	90503-7635	Spare parts kit, G-capsule	Strainer insertion Spring Capsule Distance washer Gasket	1 2 3 4 5	1 1 1 1 1

1.0 Tf501323.en

This page intentionally left blank

Tetra Pak

Maintenance & Spare Parts

Constant-pressure modulating valve

(Alfa Laval)

CPM-2



1.0 1214498-0101.fro

Tetra Pak

Doc No. 1214498-0101

Constant-pressure modulating valve

CPM-2

This document refers to components specified in Technical Manual, on Maintenance & Spare Parts CD/DVD or on Tetra Pak Intranet.

1.0 1214498-0101.fro

Version 04 Issue 2009-04

Doc No. 1214498-0101

Tetra Pak

Tetra Pak Processing Systems AB

Table of contents

Maintenance 1

Constant-pressure modulating valve 1

General 1

Change spare part kit. 2

Spare parts 5

CPMI-2-Kv23 6

CPMO-2-Kv23 7

CPMI-2-Kv2/15 8

CPMO-2-Kv2/15 9

CPMI-2-Kv7 10

CPMO-2-Kv9 11

1.0 1214498-0101.TOC

This page intentionally left blank

Maintenance

Constant-pressure modulating valve

General

CPMI-2 and CPMO-2 are sanitary constant-pressure valves for use in stainless steel pipe systems. The CPMI-2 (Constant-Pressure Modulating Inlet) maintains a constant pressure in the process line at the inlet side of the valve. CPMI-2 is often used after separators and heat exchangers or as an overflow valve. The CPMO-2 (Constant-Pressure Modulating Outlet) maintains a constant pressure in the process line at the outlet side of the valve. Typical applications are before filling/bottling machines etc.

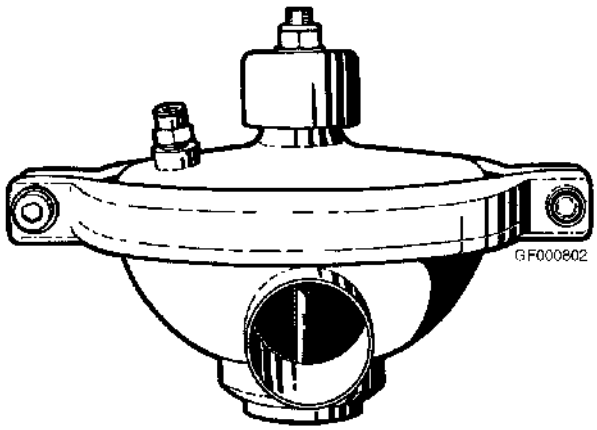

1.0 tf502085.en

Change spare part kit

WARNING!

Risk of injury!
Make sure that the pipelines are drained and free from media before servicing the valve!
Never service the valve when it is hot!
Always disconnect compressed air before service!
The valve and the pipelines must **never** be pressurised when servicing the valve!

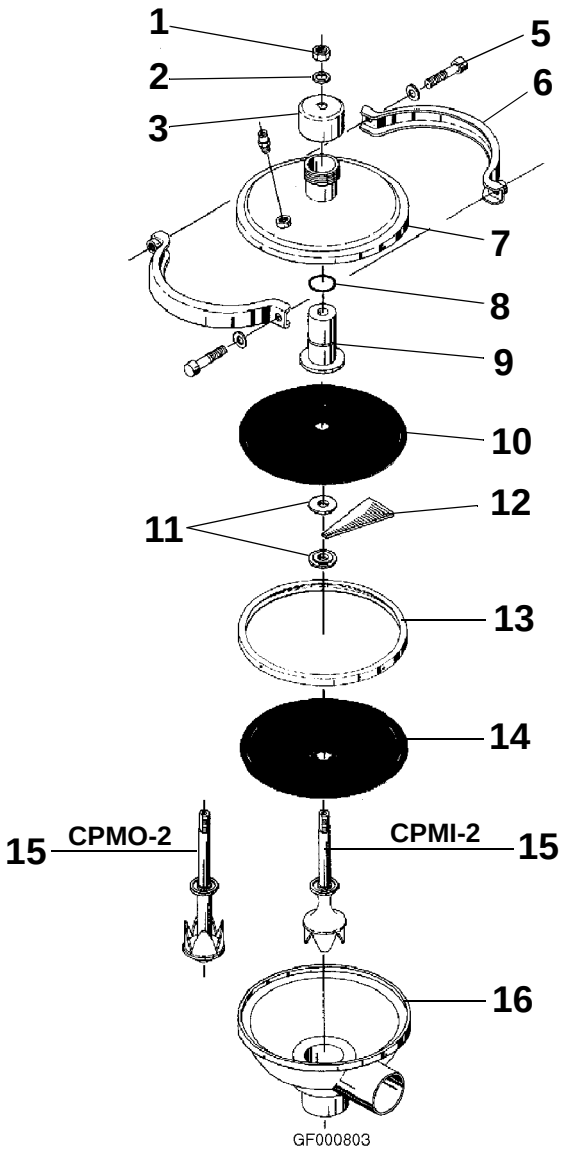

1 Top nut
2 Washer
3 Top
5 Screw
6 Clamp
7 Cover
8 O-ring
9 Guide
10 Upper diaphragm
11 Inner ring
12 Sector
13 Outer ring
14 Lower diaphragm
15 Valve plug
16 Valve body

1.0 tf502085.en

Disassemble

a) Loosen screws (5) and remove clamp (6).

b) **CPMI-2:** Remove cover (7) together with the internal parts of the valve from the valve body (16).

c) Remove top nut (1), washer (2), and top (3) from the plug (15).

Note! In “d” ensure that the cover (7) is turned downwards and plug (15) is pulled upwards so that sectors (12) are not separated from the diaphragms (10,14).

d) **CPMI-2:** Remove plug (15) from the diaphragm unit and guide (9).
CPMO-2: Remove plug (15) from valve body (16), and remove cover (7) and internal parts of the valve.

e) Remove lower inner ring (11) and lower diaphragm (14).

f) Remove sectors (12).

g) Remove outer ring (13), upper inner ring (11), and upper diaphragm (10).

h) Remove guide (9) from cover (7).

i) Remove O-ring (8) from guide (9).

1.0 tf502085.en

Reassemble

Change the parts of the spare part kit; the O-ring (8) and the diaphragms (10,14).

Lubricate the guide, the sectors, and the threads with food grade grease before reassembly.

a) Fit O-ring (8) on guide (9).

b) Fit lubricated guide (9) into cover (7).

Note! Turn cover (7) downwards before continuing, and make sure that the diaphragms are fitted correctly. One side of the lower diaphragm (which is in contact with the product) has a grey-blue colour. The flat side of the upper diaphragm should be fitted towards the cover.

c) Fit upper diaphragm (10), upper inner ring (11), and outer ring (13) on guide (9) and cover (7).

d) Fit sectors (12) between upper inner ring (11) and outer ring (13).

e) Fit lower inner ring (11) and lower diaphragm (14).

f) **CPMI-2:**Fit plug (15) in the diaphragm unit and guide (9) until the flange of the lug contacts the lower diaphragm (14).

g) Fit valve body (16) in cover (7).

h) **CPMO-2**: Fit plug (15) through valve body (16) and in the diaphragm unit and guide (9) until the flange of the plug contacts the lower diaphragm (14).

i) Fit top (3), washer (2) an top nut (1) on plug (15).

j) Fit and tighten clamp (6) and screws (5) to a torque of 10-15 Nm.

Note! **Pre-use check:** Lift and lower the valve top several times to ensure that the valve operates smoothly.

1.0 tf502085.en

Spare parts

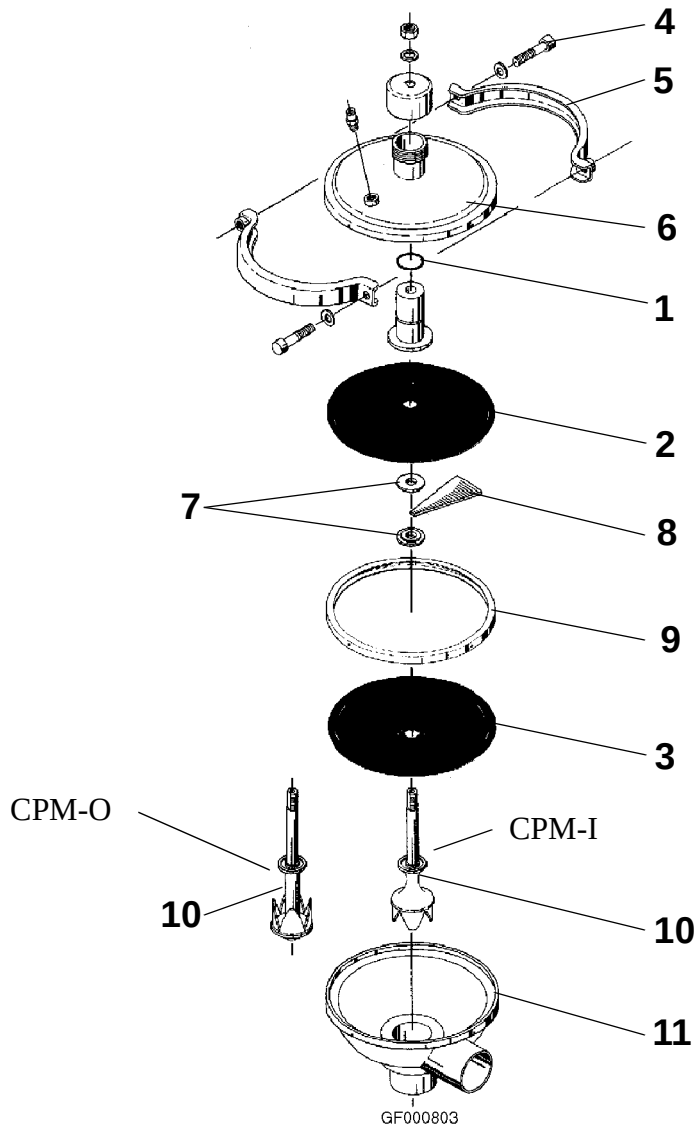

1.0 tf502086.en

CPMI-2-Kv23

Spare part article No.	Description	Included parts	Pos.	Qty
6-9611-99-1222	Screw	-	4	2
6-9612-3352-01	Clamp	-	5	2
6-31356-0067-1	Cover	-	6	1
6-00223-406-49	O-ring, NBR (Standard)	-	1	1
6-9611-99-2253	O-ring, FPM	-	1	1
6-31356-0014-2	Upper diaphragm, NBR (Standard)	-	2	1
6-31356-0014-4	Upper diaphragm, EPDM/PTFE	-	2	1
6-9612-3057-02	Upper diaphragm, PTFE	-	2	1
6-31356-0063-1	Inner ring	-	7	2
6-31356-0062-1	Support sector	-	8	12
6-9612-3058-01	Outer ring	-	9	1
6-9612-3066-01	Lower diaphragm, EPDM/PTFE (Standard)	-	3	1
6-9612-3057-01	Lower diaphragm, PTFE	-	3	1
6-9612-3059-01	Valve plug	-	10	1
6-9612-3340-01	Valve body, ISO	-	11	1
6-9612-3343-01	Valve body, DIN	-	11	1
6-9611-92-0218	Service kit (Standard)	O-ring, NBR Upper diaphragm, NBR Lower diaphragm, EPDM-PTFE	1 2 3	1 1 1
6-9611-92-0515	Service kit (Option)	O-ring, FPM Upper diaphragm, FPM Lower diaphragm, PTFE	1 2 3	1 1 1
6-9611-92-0516	Service kit (Option)	O-ring, FPM Upper diaphragm, FPM Lower diaphragm, EPDM-PTFE	1 2 3	1 1 1
6-9611-92-0517	Service kit (Option)	O-ring, FPM Upper diaphragm, FPM Lower diaphragm, PTFE/EPDM-PTFE	1 2 3	1 1 1

1.0 tf502086.en

CPMO-2-Kv23

Spare part article No.	Description	Included parts	Pos.	Qty
6-9611-99-1222	Screw	-	4	2
6-9612-3352-01	Clamp	-	5	2
6-31356-0067-1	Cover	-	6	1
6-00223-406-49	O-ring, NBR (Standard)	-	1	1
6-9611-99-2253	O-ring, FPM	-	1	1
6-31356-0014-2	Upper diaphragm, NBR (Standard)	-	2	1
6-31356-0014-4	Upper diaphragm, EPDM/PTFE	-	2	1
6-9612-3057-02	Upper diaphragm, PTFE	-	2	1
6-31356-0063-1	Inner ring	-	7	2
6-31356-0062-1	Support sector	-	8	12
6-9612-3058-01	Outer ring	-	9	1
6-9612-3066-01	Lower diaphragm, EPDM/PTFE (Standard)	-	3	1
6-9612-3057-01	Lower diaphragm, PTFE	-	3	1
6-9612-3060-01	Valve plug	-	10	1
6-9612-3341-01	Valve body, ISO	-	11	1
6-9612-3344-01	Valve body, DIN	-	11	1
6-9611-92-0218	Service kit (Standard)	O-ring, NBR Upper diaphragm, NBR Lower diaphragm, EPDM-PTFE	1 2 3	1 1 1
6-9611-92-0515	Service kit (Option)	O-ring, FPM Upper diaphragm, FPM Lower diaphragm, PTFE	1 2 3	1 1 1
6-9611-92-0516	Service kit (Option)	O-ring, FPM Upper diaphragm, FPM Lower diaphragm, EPDM-PTFE	1 2 3	1 1 1
6-9611-92-0517	Service kit (Option)	O-ring, FPM Upper diaphragm, FPM Lower diaphragm, PTFE/EPDM-PTFE	1 2 3	1 1 1

1.0 tf502086.en

CPMI-2-Kv2/15

Spare part article No.	Description	Included parts	Pos.	Qty
6-9611-99-1222	Screw	-	4	2
6-9612-3352-01	Clamp	-	5	2
6-31356-0067-1	Cover	-	6	1
6-00223-406-49	O-ring, NBR (Standard)	-	1	1
6-9611-99-2253	O-ring, FPM	-	1	1
6-31356-0014-2	Upper diaphragm, NBR (Standard)	-	2	1
6-31356-0014-4	Upper diaphragm, EPDM/PTFE	-	2	1
6-9612-3057-02	Upper diaphragm, PTFE	-	2	1
6-31356-0063-1	Inner ring	-	7	2
6-31356-0062-1	Support sector	-	8	12
6-9612-3058-01	Outer ring	-	9	1
6-9612-3066-01	Lower diaphragm, EPDM/PTFE (Standard)	-	3	1
6-9612-3057-01	Lower diaphragm, PTFE	-	3	1
6-9612-3061-01	Valve plug	-	10	1
6-9612-3342-01	Valve body, ISO	-	11	1
6-9612-3345-01	Valve body, DIN	-	11	1
6-9611-92-0218	Service kit (Standard)	O-ring, NBR Upper diaphragm, NBR Lower diaphragm, EPDM-PTFE	1 2 3	1 1 1
6-9611-92-0515	Service kit (Option)	O-ring, FPM Upper diaphragm, FPM Lower diaphragm, PTFE	1 2 3	1 1 1
6-9611-92-0516	Service kit (Option)	O-ring, FPM Upper diaphragm, FPM Lower diaphragm, EPDM-PTFE	1 2 3	1 1 1
6-9611-92-0517	Service kit (Option)	O-ring, FPM Upper diaphragm, FPM Lower diaphragm, PTFE/EPDM-PTFE	1 2 3	1 1 1

1.0 tf502086.en

CPMO-2-Kv2/15

Spare part article No.	Description	Included parts	Pos.	Qty
6-9611-99-1222	Screw	-	4	2
6-9612-3352-01	Clamp	-	5	2
6-31356-0067-1	Cover	-	6	1
6-00223-406-49	O-ring, NBR (Standard)	-	1	1
6-9611-99-2253	O-ring, FPM	-	1	1
6-31356-0014-2	Upper diaphragm, NBR (Standard)	-	2	1
6-31356-0014-4	Upper diaphragm, EPDM/PTFE	-	2	1
6-9612-3057-02	Upper diaphragm, PTFE	-	2	1
6-31356-0063-1	Inner ring	-	7	2
6-31356-0062-1	Support sector	-	8	12
6-9612-3058-01	Outer ring	-	9	1
6-9612-3066-01	Lower diaphragm, EPDM/PTFE (Standard)	-	3	1
6-9612-3057-01	Lower diaphragm, PTFE	-	3	1
6-9612-3062-01	Valve plug	-	10	1
6-9612-3342-01	Valve body, ISO	-	11	1
6-9612-3345-01	Valve body, DIN	-	11	1
6-9611-92-0218	Service kit (Standard)	O-ring, NBR Upper diaphragm, NBR Lower diaphragm, EPDM-PTFE	1 2 3	1 1 1
6-9611-92-0515	Service kit (Option)	O-ring, FPM Upper diaphragm, FPM Lower diaphragm, PTFE	1 2 3	1 1 1
6-9611-92-0516	Service kit (Option)	O-ring, FPM Upper diaphragm, FPM Lower diaphragm, EPDM-PTFE	1 2 3	1 1 1
6-9611-92-0517	Service kit (Option)	O-ring, FPM Upper diaphragm, FPM Lower diaphragm, PTFE/EPDM-PTFE	1 2 3	1 1 1

1.0 tf502086.en

CPMI-2-Kv7

Spare part article No.	Description	Included parts	Pos.	Qty
6-9611-99-1222	Screw	-	4	2
6-9612-3352-01	Clamp	-	5	2
6-31356-0067-1	Cover	-	6	1
6-00223-406-49	O-ring, NBR (Standard)	-	1	1
6-9611-99-2253	O-ring, FPM	-	1	1
6-31356-0014-2	Upper diaphragm, NBR (Standard)	-	2	1
6-31356-0014-4	Upper diaphragm, EPDM/PTFE	-	2	1
6-9612-3057-02	Upper diaphragm, PTFE	-	2	1
6-31356-0063-1	Inner ring	-	7	2
6-31356-0062-1	Support sector	-	8	12
6-9612-3058-01	Outer ring	-	9	1
6-9612-3066-01	Lower diaphragm, EPDM/PTFE (Standard)	-	3	1
6-9612-3057-01	Lower diaphragm, PTFE	-	3	1
6-9612-4687-01	Valve plug	-	10	1
6-9612-3342-01	Valve body, ISO	-	11	1
6-9612-3345-01	Valve body, DIN	-	11	1
6-9611-92-0218	Service kit (Standard)	O-ring, NBR Upper diaphragm, NBR Lower diaphragm, EPDM-PTFE	1 2 3	1 1 1
6-9611-92-0515	Service kit (Option)	O-ring, FPM Upper diaphragm, FPM Lower diaphragm, PTFE	1 2 3	1 1 1
6-9611-92-0516	Service kit (Option)	O-ring, FPM Upper diaphragm, FPM Lower diaphragm, EPDM-PTFE	1 2 3	1 1 1
6-9611-92-0517	Service kit (Option)	O-ring, FPM Upper diaphragm, FPM Lower diaphragm, PTFE/EPDM-PTFE	1 2 3	1 1 1

1.0 tf502086.en

CPMO-2-Kv9

Spare part article No.	Description	Included parts	Pos.	Qty
6-9611-99-1222	Screw	-	4	2
6-9612-3352-01	Clamp	-	5	2
6-31356-0067-1	Cover	-	6	1
6-00223-406-49	O-ring, NBR (Standard)	-	1	1
6-9611-99-2253	O-ring, FPM	-	1	1
6-31356-0014-2	Upper diaphragm, NBR (Standard)	-	2	1
6-31356-0014-4	Upper diaphragm, EPDM/PTFE	-	2	1
6-9612-3057-02	Upper diaphragm, PTFE	-	2	1
6-31356-0063-1	Inner ring	-	7	2
6-31356-0062-1	Support sector	-	8	12
6-9612-3058-01	Outer ring	-	9	1
6-9612-3066-01	Lower diaphragm, EPDM/PTFE (Standard)	-	3	1
6-9612-3057-01	Lower diaphragm, PTFE	-	3	1
6-9612-4625-01	Valve plug	-	10	1
6-9612-3342-01	Valve body, ISO	-	11	1
6-9612-3345-01	Valve body, DIN	-	11	1
6-9611-92-0218	Service kit (Standard)	O-ring, NBR Upper diaphragm, NBR Lower diaphragm, EPDM-PTFE	1 2 3	1 1 1
6-9611-92-0515	Service kit (Option)	O-ring, FPM Upper diaphragm, FPM Lower diaphragm, PTFE	1 2 3	1 1 1
6-9611-92-0516	Service kit (Option)	O-ring, FPM Upper diaphragm, FPM Lower diaphragm, EPDM-PTFE	1 2 3	1 1 1
6-9611-92-0517	Service kit (Option)	O-ring, FPM Upper diaphragm, FPM Lower diaphragm, PTFE/EPDM-PTFE	1 2 3	1 1 1

1.0 tf502086.en

Tetra Pak

Maintenance & Spare Parts

Expansion valve

(Tetra Pak)

APC

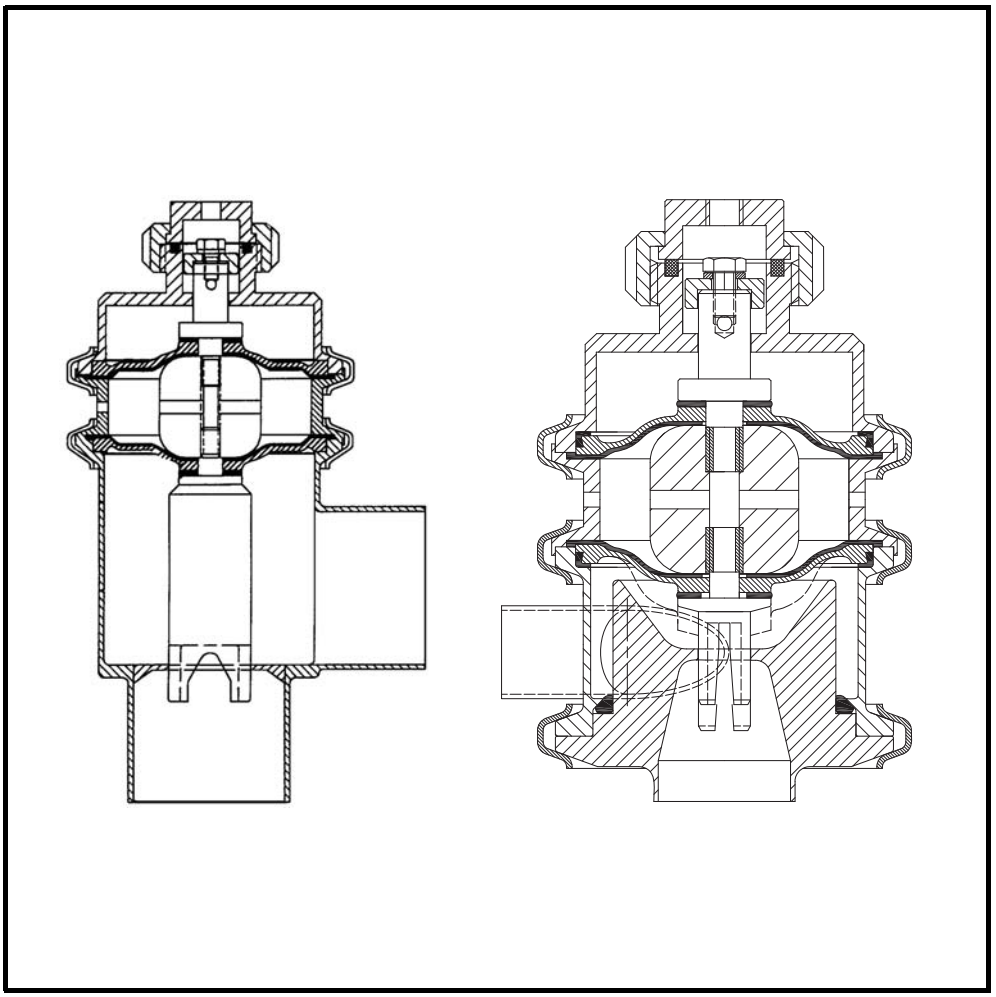

1.0 1215611-0101.fro

Tetra Pak

Doc No. 1215611-0101

Expansion valve

APC

Article No.	Connection	DN	Kvs
6-32422-0601-2	W ISO	25	0.5
6-32422-0601-1	W ISO	25	1
6-32422-0677-1	W ISO	25	2
6-32422-0382-1	W ISO	38	1
6-32422-0382-2	W ISO	38	2
6-32422-0302-3	W ISO	51	4
6-32422-0302-2	W ISO	51	7
6-32422-0302-4	W ISO	51	10
6-32422-0302-5	W ISO	51	12
6-32422-0302-1	W ISO	51	14
6-32422-0302-6	W ISO	51	18
6-32422-0320-4	W ISO	63.5	10
6-32422-0320-3	W ISO	63.5	12
6-32422-0320-2	W ISO	63.5	14
6-32422-0320-5	W ISO	63.5	18
6-32422-0320-1	W ISO	63.5	22
6-32422-0427-1	W ISO	76.1	26
6-32422-0427-2	W ISO	76.1	32
6-32422-0427-3	W ISO	76.1	18
6-32422-0427-4	W ISO	76.1	22
6-32422-0505-2	W DIN	25	0.5
6-32422-0505-1	W DIN	25	1
6-32422-0680-1	W DIN	25	2
6-32422-0516-1	W DIN	40	1
6-32422-0516-2	W DIN	40	2
6-32422-0512-3	W DIN	50	4
6-32422-0512-2	W DIN	50	7
6-32422-0512-4	W DIN	50	10
6-32422-0512-5	W DIN	50	12
6-32422-0512-1	W DIN	50	14

Version 14 Issue 2014-08

Doc No. 1215611-0101

Tetra Pak

Tetra Pak Processing Systems AB

1.0 1215611-0101.fro

Article No.	Connection	DN	Kvs
6-32422-0512-6	W DIN	50	18
6-32422-0510-4	W DIN	65	10
6-32422-0510-3	W DIN	65	12
6-32422-0510-2	W DIN	65	14
6-32422-0510-5	W DIN	65	18
6-32422-0510-1	W DIN	65	22
6-32422-0513-1	W DIN	80	26
6-32422-0513-2	W DIN	80	32
6-32422-0513-3	W DIN	80	18
6-32422-0513-4	W DIN	80	22

1.0 1215611-0101.fro

This page intentionally left blank

Function description 1

Maintenance 3

Replace product membrane 3

Disassemble. 3

Reassemble 4

Replace air membrane. 5

Disassemble. 5

Reassemble 6

Replace valve seat gasket. 7

Disassemble. 7

Reassemble 7

Spare parts 8

Diaphragm set 8

Distance block, Guide spindle & Washer stop 10

Gasket & Seal ring 11

Valve cone 13

Valve housing 14

1.0 1215611-0101.TOC

This page intentionally left blank

Function description

The expansion valve APC is used to maintain a constant pressure in a process line before the APC valve. The valve is specially designed for use as a pressure regulating device for holding cells with subsequent vacuum chamber incorporated in a VTIS-plant.

DN25/SMS25

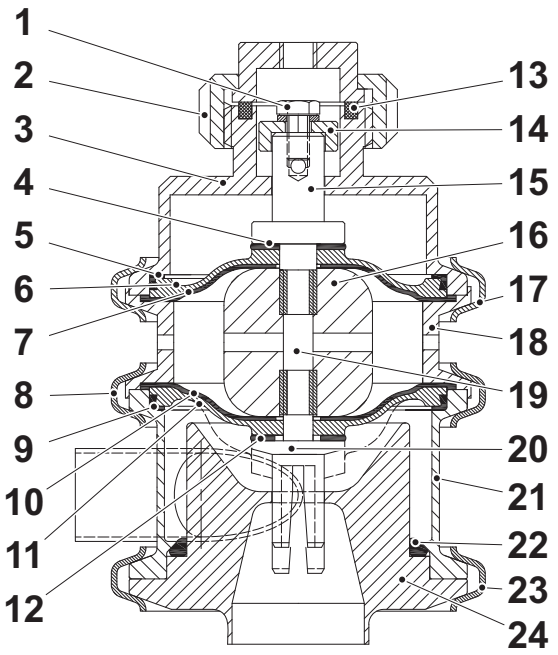

2.2tf502514.en

1	Screw	13	Gasket
2	Nut	14	Washer stop
3	Air cylinder	15	Guide spindle
4	Spindle gasket	16	Distance block
5	L-gasket	17	Clamp
6	Teflon membrane	18	Middle piece
7	Rubber membrane	19	Helicoil thread
8	Clamp	20	Valve cone
9	L-gasket	21	Valve body
10	Rubber membrane	22	Gasket
11	Teflon membrane	23	Clamp
12	Spindle gasket	24	Valve seat

(Cont'd)

(Cont'd)

SMS38-SMS63.5 & DN40-DN65

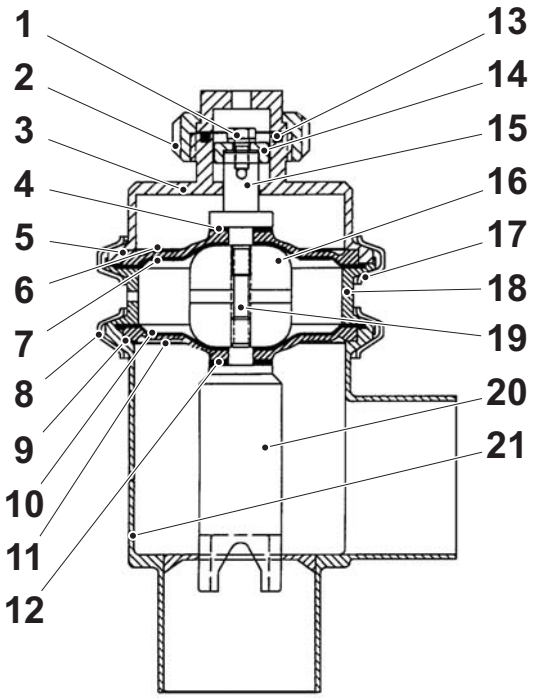

SMS76.1 & DN80

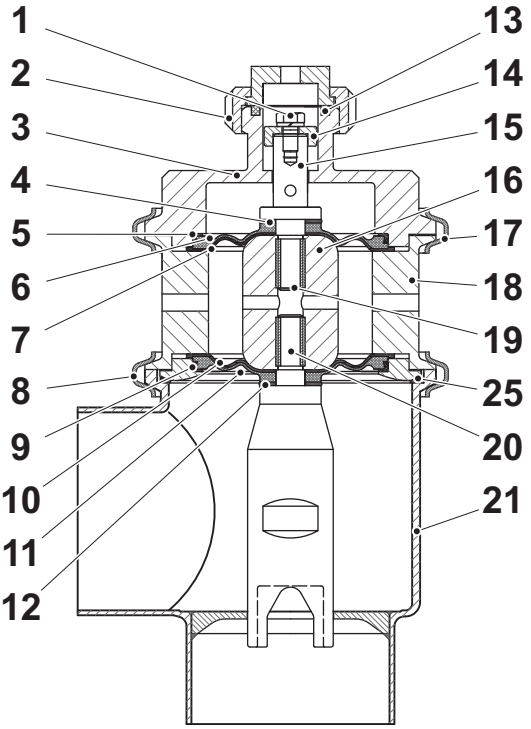

2.2tf502514.en

1	Screw	12	Spindle gasket
2	Nut	13	Gasket
3	Air cylinder	14	Washer stop
4	Spindle gasket	15	Guide spindle
5	L-gasket	16	Distance block
6	Teflon membrane	17	Clamp
7	Rubber membrane	18	Middle piece
8	Clamp	19	Helicoil thread
9	L-gasket	20	Valve cone
10	Rubber membrane	21	Valve body
11	Teflon membrane	25	Seal ring

Maintenance

WARNING!

Risk of injury!
Make sure that the pipelines are drained and free from media before servicing the valve!
Never service the valve when it is hot

Replace product membrane

Disassemble

a) Remove the clamp (8).
b) Remove the upper part of the valve from the valve body (21).
c) Put a screwdriver or a spanner into the slots of the valve cone (20).
d) If it is an SMS76.1 or a DN80 valve, remove the seal ring (25)
e) Put a pin (dia. 4-4.5 mm) into the middle piece (18) vent hole and through the distance piece (16).
f) Unscrew the valve cone (20) from the distance piece (16).

2.2tf502514.en

SMS38-SMS76 & DN40-DN80

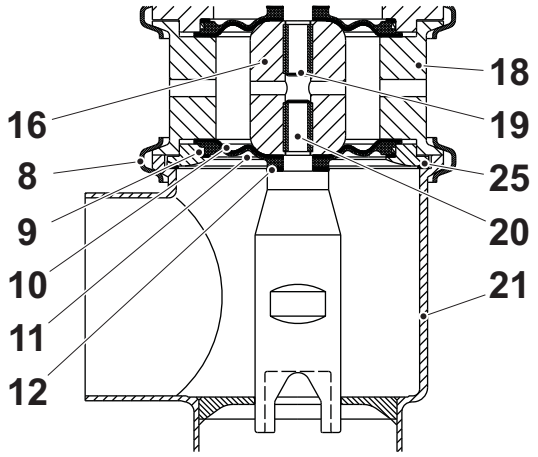

DN25/SMS25

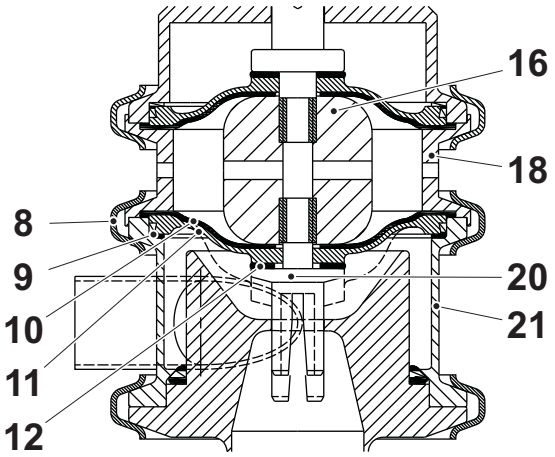

8 Clamp
9 L-gasket
10 Rubber membrane
11 Teflon membrane
12 Spindle gasket

16 Distance piece
18 Middle piece
20 Valve cone
21 Valve body
25 Seal ring

Reassemble

a) Change the parts of the spare part kit; the spindle gasket (12), Teflon membrane (11), L-gasket (9), and rubber membrane (10).

b) Fit new spindle gasket (12) and membranes (10,11) on the valve cone (20).

c) Screw the valve cone (20) into the distance piece (16) until metallic contact. Do not use tools.

d) Grease the new L-gasket (9) and the gasket groove with soap water to avoid problems with the L-gasket falling off during mounting.

e) Mount L-gasket (9) on membranes (10,11).

f) Fit the new seal ring (25)

g) Fit upper part of the valve on the valve body (21).

Note! Check the position of the L-gasket if the middle piece does not fit properly.

h) Fit and tighten clamp (8).

2.2tf502514.en

Replace air membrane

Disassemble

a) Disconnect air supply pipe.

b) Remove nut (2).

c) Remove screw (1) and washer stop (14).

d) Remove clamp (17) and air cylinder (3).

e) Put a pin (dia. 4-4.5 mm) into the middle piece (18) vent hole and through the distance piece (16).

f) Put a pin through the guide spindle (15) hole.

g) Unscrew guide spindle (15) from the distance piece (16).

SMS38-SMS76 & DN40-DN80

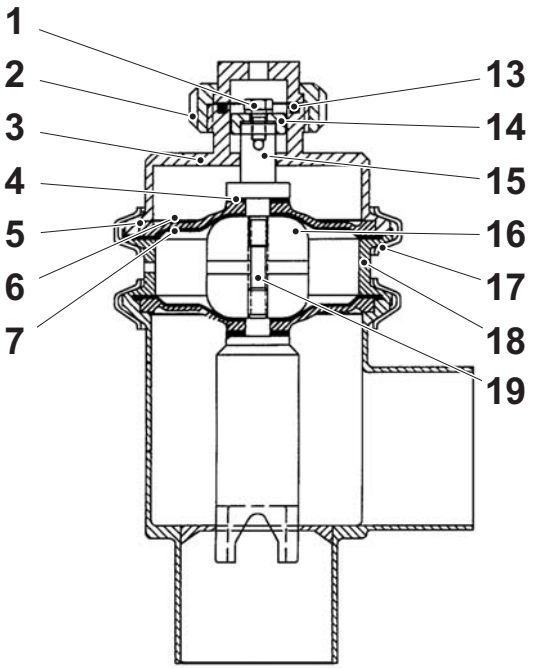

DN25/SMS25

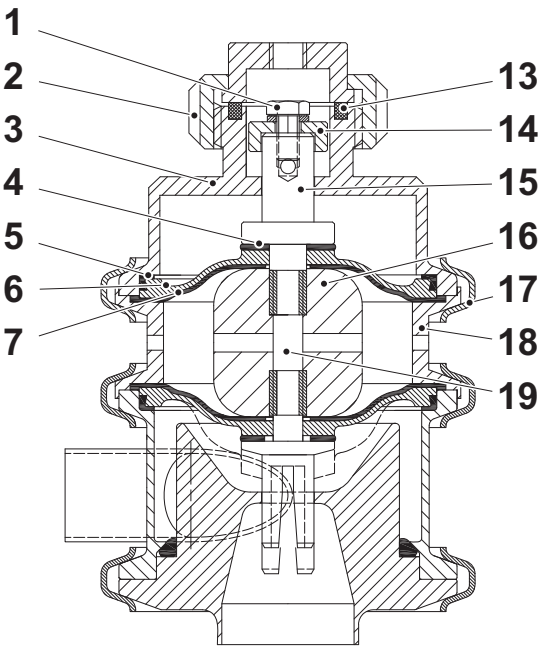

1	Screw	13	Gasket
2	Nut	14	Washer stop
3	Air cylinder	15	Guide spindle
4	Spindle gasket	16	Distance piece
5	L-gasket	17	Clamp
6	Teflon membrane	18	Middle piece
7	Rubber membrane	19	Helicoil thread

2.2tf502514.en

Reassemble

a) Change the parts of the spare part kit; the spindle gasket (4), Teflon membrane (6), L-gasket (5), and rubber membrane (7).

b) Change the gasket (13) if needed.

c) Fit new spindle gasket (4) and membranes (6,7) on the guide spindle (15).

d) Screw guide spindle (15) into distance piece (16) until metallic contact. Do not use tools.

e) Fit new L-gasket (5) on Teflon membrane (6).

f) Fit air cylinder (3) on middle piece (18).

Note! Check the position of the L-gasket if the air cylinder does not fit properly

g) Grease the upper part of the guide spindle (15) with silicon.

Note! Do NOT use mineral oil or grease as they will destroy the rubber parts.

h) Fit washer stop (14) and screw (1) on guide spindle (15). Secure the screw with Loctite.

Note! Do not use Loctite at helicoil thread (19).

i) Fit and tighten clamp (17).

Note! Check the position of the L-gasket if the air cylinder does not fit properly.

j) Fit and tighten nut (2).

k) Connect air supply.

2.2tf502514.en

Replace valve seat gasket

Disassemble

a) Remove clamp (23).
b) Remove valve seat (24).
c) Remove gasket (22)

Reassemble

a) Replace gasket (22).
b) Fit valve seat (24) on the valve body (21).
c) Fit and tighten clamp (23).

SMS38-SMS76 & DN40-DN80

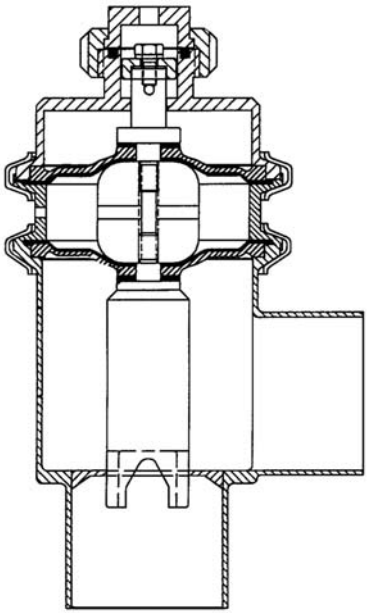

DN25/SMS25

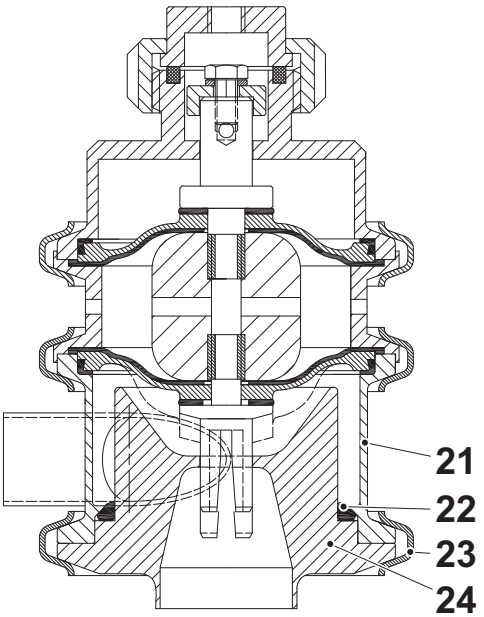

21 Valve body
22 Gasket
23 Clamp
24 Valve seat

2.2tf502514.en

Spare parts

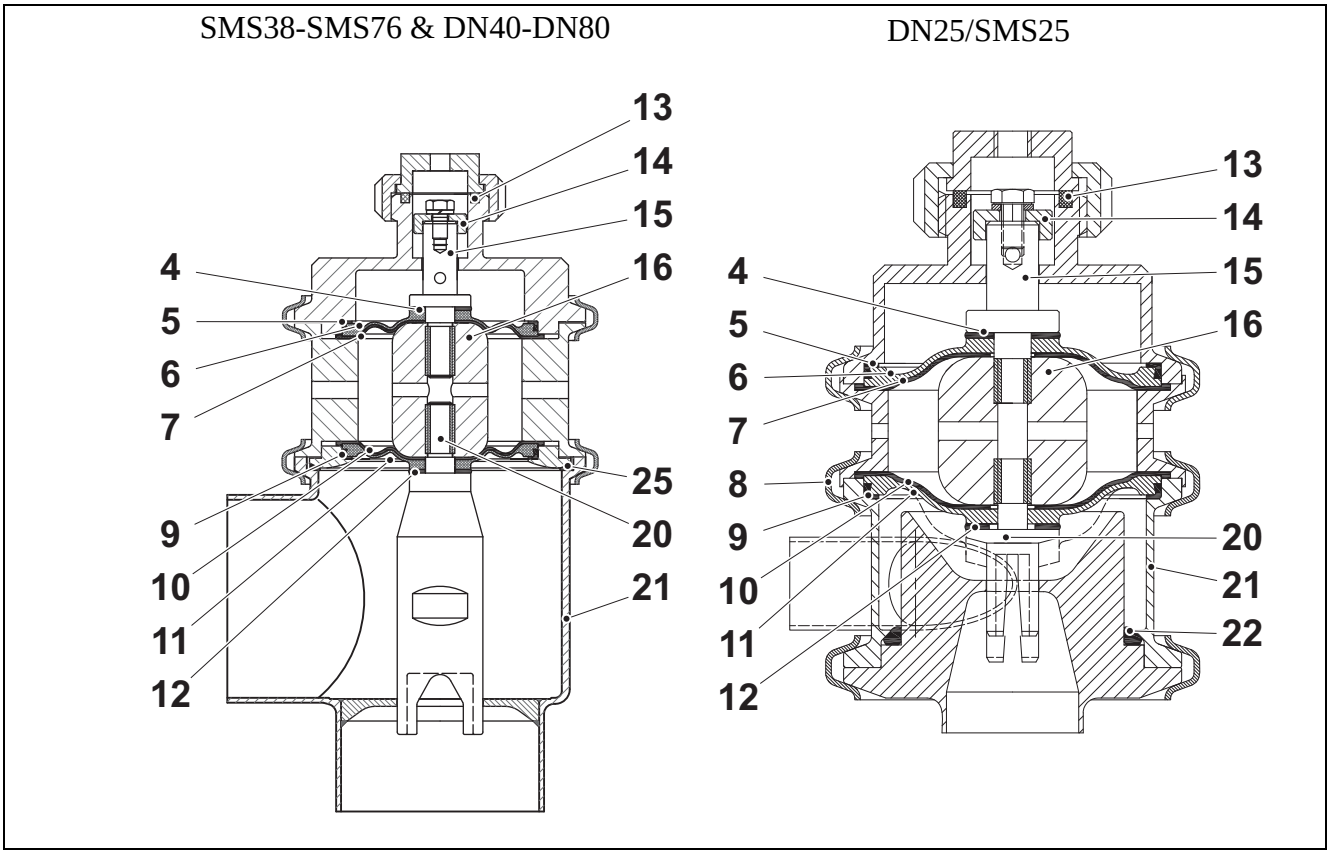

1.0 tf502515.en

Diaphragm set

Component article No.	Spare part Article No.	Description	Included parts	Pos.	Qty
6-32422-0302-1 6-32422-0302-2 6-32422-0302-3 6-32422-0302-4 6-32422-0302-5 6-32422-0302-6 6-32422-0320-1	6-9611-92-0001	Diaphragm set, PTFE, EPDM, product membrane (Air end)	Spindle gasket Teflon membrane L-gasket Rubber membrane	4 6 5 7	1 1 1 1
6-32422-0320-2 6-32422-0320-3 6-32422-0320-4 6-32422-0320-5 6-32422-0382-1 6-32422-0382-2 6-32422-0505-1 6-32422-0505-2 6-32422-0510-1 6-32422-0510-2 6-32422-0510-3 6-32422-0510-4 6-32422-0510-5 6-32422-0677-1 6-32422-0680-1	6-9611-92-0001	Diaphragm set, PTFE, EPDM, product membrane (Wet end)	Spindle gasket Teflon membrane L-gasket Rubber membrane	12 11 9 10	1 1 1 1

(Cont'd)

(Cont'd)

6-32422-0512-1 6-32422-0512-2 6-32422-0512-3 6-32422-0512-4 6-32422-0512-5 6-32422-0512-6 6-32422-0516-1 6-32422-0516-2 6-32422-0601-1 6-32422-0601-2	6-9611-92-0001 6-9611-92-0001 	Diaphragm set, PTFE, EPDM, product membrane (Air end) Diaphragm set, PTFE, EPDM, product membrane (Wet end)	Spindle gasket Teflon membrane L-gasket Rubber membrane Spindle gasket Teflon membrane L-gasket Rubber membrane	4 6 5 7 4 6 5 7	1 1 1 1 1 1 1 1
6-32422-0427-1 6-32422-0427-2 6-32422-0427-3 6-32422-0427-4 6-32422-0513-1 6-32422-0513-2 6-32422-0513-3 6-32422-0513-4	6-9611-92-0007 6-9611-92-0007 	Diaphragm set, PTFE, EPDM, product membrane (Air end) Diaphragm set, PTFE, EPDM, product membrane (Wet end)	Spindle gasket Teflon membrane L-gasket Rubber membrane Spindle gasket Teflon membrane L-gasket Rubber membrane	4 6, 5 7 4 6, 5 7	1 1 1 1 1 1 1 1

1.0 tf502515.en

Distance block, Guide spindle & Washer stop

Component article No.	Spare part Article No.	Description	Pos.	Qty
6-32422-0302-1 6-32422-0302-2 6-32422-0302-3 6-32422-0302-4 6-32422-0302-5 6-32422-0302-6 6-32422-0320-1 6-32422-0320-2 6-32422-0320-3 6-32422-0320-4 6-32422-0320-5 6-32422-0382-1 6-32422-0382-2 6-32422-0505-1 6-32422-0505-2 6-32422-0510-1 6-32422-0510-2 6-32422-0510-3 6-32422-0510-4 6-32422-0510-5 6-32422-0512-1 6-32422-0512-2 6-32422-0512-3 6-32422-0512-4 6-32422-0512-5 6-32422-0512-6 6-32422-0516-1 6-32422-0516-2 6-32422-0601-1 6-32422-0601-2 6-32422-0677-1 6-32422-0680-1	6-32422-0265-1	Distance block	16	1
	6-32422-0262-1	Guide spindle	15	1
	6-32422-0390-1	Washer stop	14	1
6-32422-0427-1 6-32422-0427-2 6-32422-0427-3 6-32422-0427-4 6-32422-0513-1 6-32422-0513-2 6-32422-0513-3 6-32422-0513-4	6-32422-0433-1	Distance block	16	1
	6-32422-0430-1	Guide spindle	15	1
	6-32422-0390-1	Washer stop	14	1

1.0 tf502515.en

Gasket & Seal ring

Component article No.	Spare part Article No.	Description	Pos.	Qty
6-32422-0505-1 6-32422-0505-2 6-32422-0601-1 6-32422-0601-2 6-32422-0677-1 6-32422-0680-1	90511-8241	O-ring, EPDM	22	1
6-32422-0302-1 6-32422-0302-2 6-32422-0302-3 6-32422-0302-4 6-32422-0302-5 6-32422-0302-6 6-32422-0320-1 6-32422-0320-2 6-32422-0320-3 6-32422-0320-4 6-32422-0320-5 6-32422-0382-1 6-32422-0382-2 6-32422-0427-1 6-32422-0427-2 6-32422-0427-3 6-32422-0427-4 6-32422-0505-1 6-32422-0505-2 6-32422-0601-1 6-32422-0601-2 6-32422-0510-1 6-32422-0510-2 6-32422-0510-3 6-32422-0510-4 6-32422-0510-5 6-32422-0512-1 6-32422-0512-2 6-32422-0512-3 6-32422-0512-4 6-32422-0512-5 6-32422-0512-6 6-32422-0513-1 6-32422-0513-2 6-32422-0513-3 6-32422-0513-4 6-32422-0516-1 6-32422-0516-2 6-32422-0677-1 6-32422-0680-1	6-31317-0375-3	Seal ring, EPDM	13	1

1.0 tf502515.en

6-32422-0427-1 6-32422-0427-2 6-32422-0427-3 6-32422-0427-4 6-32422-0513-1 6-32422-0513-2 6-32422-0513-3 6-32422-0513-4	6-31353-0205-1	Seal ring, EPDM, SMS76.1 & DN80	25	1

1.0 tf502515.en

Valve cone

Component article No.	Spare part Article No.	Description	Pos.	Qty
6-32422-0505-1	6-32422-0508-1	APC-W, DN25, Kvs=1	20	1
6-32422-0505-2	6-32422-0568-1	APC-W, DN25, Kvs=0,5		
6-32422-0382-1 6-32422-0516-1	6-32422-0381-1	APC-W, ISO 38/DN40, Kvs=1		
6-32422-0382-2 6-32422-0516-2	6-32422-0380-1	APC-W, ISO 38/DN40, Kvs=2		
6-32422-0302-3 6-32422-0512-3	6-32422-0319-1	APC-W, ISO 51/DN50, Kvs=4		
6-32422-0302-2 6-32422-0512-2	6-32422-0275-1	APC-W, ISO 51/DN50, Kvs=7		
6-32422-0302-4 6-32422-0512-4	6-32422-0394-1	APC-W, ISO 51/DN50, Kvs=10		
6-32422-0302-5 6-32422-0512-5	6-32422-0393-1	APC-W, ISO 51/DN50, Kvs=12		
6-32422-0302-1 6-32422-0512-1	6-32422-0261-1	APC-W, ISO 51/DN50, Kvs=14		
6-32422-0302-6 6-32422-0512-6	6-32422-0518-1	APC-W, ISO 51/DN50, Kvs=18		
6-32422-0320-4 6-32422-0510-4	6-32422-0392-1	APC-W, ISO 63.5/DN65, Kvs=10		
6-32422-0320-3 6-32422-0510-3	6-32422-0391-1	APC-W, ISO 63.5/DN65, Kvs=12		
6-32422-0320-2 6-32422-0510-2	6-32422-0323-1	APC-W, ISO 63.5/DN65, Kvs=14		
6-32422-0320-5 6-32422-0510-5	6-32422-0504-1	APC-W, ISO 63.5/DN65, Kvs=18		
6-32422-0320-1 6-32422-0510-1	6-32422-0321-1	APC-W, ISO 63.5/DN65, Kvs=22		
6-32422-0427-1	6-32422-0429-1	APC-W, ISO 76.1, Kvs=26		
6-32422-0427-2	6-32422-0519-1	APC-W, ISO 76.1, Kvs=32		
6-32422-0427-3	6-32422-0632-1	APC W ISO76.1 Kvs=18.0		
6-32422-0427-4	6-32422-0633-1	APC W ISO76.1 Kvs=22.0		
6-32422-0513-1	6-32422-0515-1	APC-W, DN80, Kvs=26		
6-32422-0513-2	6-32422-0520-1	APC-W, DN80, Kvs=32		
6-32422-0513-3	6-32422-0634-1	APC W DN80 Kvs=18.0		
6-32422-0513-4	6-32422-0635-1	APC W DN80 Kvs=22.0		
6-32422-0601-1	6-32422-0597-1	APC-W, ISO 25, Kvs=1		
6-32422-0601-2	6-32422-0598-1	APC-W, ISO 25, Kvs=0,5		
6-32422-0677-1	6-32422-0679-1	APC-W, ISO 25, Kvs=2		
6-32422-0680-1	6-32422-0682-1	APC-W, DN25, Kvs=2		

1.0 tf502515.en

Valve housing

Component article No.	Spare part Article No.	Description	Pos.	Qty
6-32422-0601-1 6-32422-0601-2	6-32422-0600-1	Valve seat, AISI 316 APC W ISO 25	21	1
6-32422-0677-1	6-32422-0678-1			
6-32422-0505-1 6-32422-0505-2	6-32422-0506-1	Valve seat, AISI 316 APC W DIN, DN25		
6-32422-0680-1	6-32422-0681-1			
6-32422-0382-1 6-32422-0382-2	6-32422-0383-1	AISI 316 APC W ISO 38		
6-32422-0516-1 6-32422-0516-2	6-32422-0517-1	AISI 316 APC W DIN, DN40		
6-32422-0302-1 6-32422-0302-2 6-32422-0302-3 6-32422-0302-4 6-32422-0302-5 6-32422-0302-6	6-32422-0689-1	AISI 316 APC W ISO 51		
	6-32422-0695-1	Valve housing with outlet in Duplex EN 1.4462 APC W ISO 51 to 76,1*2mm Used in cases with abrasive products		
6-32422-0512-1 6-32422-0512-2 6-32422-0512-3 6-32422-0512-4 6-32422-0512-5 6-32422-0512-6	6-32422-0511-1	AISI 316 APC W DIN, DN50		
	6-32422-0670-1	Valve housing with outlet in Duplex EN 1.4462 APC W DIN50 to 76,1*2mm Used in cases with abrasive products		
6-32422-0510-1 6-32422-0510-2 6-32422-0510-3 6-32422-0510-4 6-32422-0510-5	6-32422-0509-1	AISI 316 APC W DIN, DN65		
6-32422-0320-1 6-32422-0320-2 6-32422-0320-3 6-32422-0320-4 6-32422-0320-5	6-32422-0690-1	AISI 316 APC W ISO 63.5		
	6-32422-0693-1	Valve housing with outlet in Duplex EN 1.4462 APC W ISO 63,5 to 76,1*2mm Used in cases with abrasive products		
6-32422-0427-1 6-32422-0427-2 6-32422-0427-3 6-32422-0427-4	6-32422-0691-1	AISI 316 APC W ISO 76.1		
	6-32422-0698-1	Valve housing with outlet in Duplex EN 1.4462 APC W ISO 76,1*2mm Used in cases with abrasive products		
6-32422-0513-1 6-32422-0513-2 6-32422-0513-3 6-32422-0513-4	6-32422-0514-1	AISI 316 APC W DIN, DN80		

1.0 tf502515.en

This page intentionally left blank

1.0 tf502515.en

Maintenance & Spare Parts

Butterfly valve
(Alfa Laval Flow)
LKB



1.01215850-0101.fro

Tetra Pak

Doc No. 1215850-0101

Butterfly valve

LKB

This document refers to components specified in Technical Manual, on Maintenance & Spare Parts CD/DVD or on Tetra Pak Intranet.

1.01215850-0101.fro

Version 05 Issue 2016-03

Doc No. 1215850-0101

Tetra Pak

Tetra Pak Processing Systems AB

Maintenance **1**
Butterfly valve **1**
Change spare part kit 1
Actuator **3**
General 3
Check operation 3
Change spare part kit 4
Spare parts **8**
Butterfly Valve **8**
Type LKB ISO 8
Type LKB-2 DIN 14
Type LKB-F 22
Handles **31**
Lockable multiposition handle 31
Handle 1.1 32
Handle 1.1 for indication unit 35
Actuators **38**
Air/Spring Type - LKLA (NC-NO) Ø85 38
Air/Air Type - LKLA Ø85 40
Air/Air Type - LKLA NW125-150 Ø85 42
Air/Spring Type - LKLA (NC-NO) Ø133 44
Air/Air Type - LKLA Ø133 46
Air/Spring Type - LKLA-T (NO-NC) Ø85 48
Air/Air Type - LKLA-T Ø85 50
Air/Air Type - LKLA-T NW125-150 Ø85 52
Air/Spring Type - LKLA-T (NC-NO) Ø133 54
Air/Air Type - LKLA-T Ø133 56

1.0 1215850-0101.TOC

This page intentionally left blank

Maintenance

Butterfly valve

Change spare part kit

WARNING!

Risk of injury!
Make sure that the pipelines are drained and free from media before servicing the valve!
Never service the valve when it is hot!

Disassemble

a) Remove the complete handle.
b) Remove screws (6) and nuts (1).
c) Remove seal ring (2) together with valve disc (4).
d) Remove bushes (3) from the disc stems.
e) Remove valve disc (4) from seal ring (2).
f) Change the parts of the spare part kit; the seal ring (2) and the bushes (3).

1.0 tf502632.EN

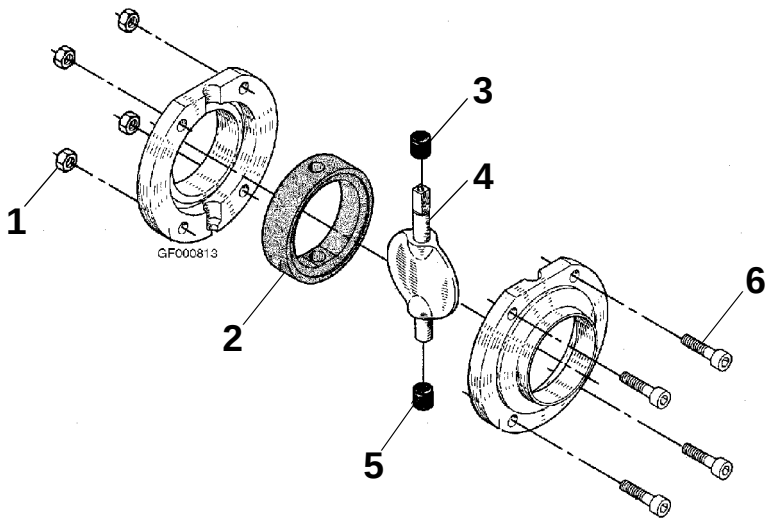

1 Nut
2 Seal ring
3 Bush
4 Valve disc
5 Bush
6 Screw

(Cont'd)

(Cont'd)

Reassemble

a) Lubricate the pin holes in the seal ring (2). Use USDA-H1 approved grease: Unisilcon L641, Paraliq GTE 703, or Molycote 111.

b) Fit valve disc (4) in the seal ring (2)

c) Fit bushes (3) on the disc stem.

d) Fit seal ring (2) together with valve disc (4) between the two valve body halves.

Caution! Rotate the valve disc so that the valve is open before tightening screws (6) and nuts (1).

e) Fit screws (6) and nuts (1) and torque tighten with Allen keys according to the table below.

Valve size	NW25	NW40	NW50	NW65	NW80	NW100	NW150
Allen key **Recom. torque**	5 mm 18 Nm	5 mm 18 Nm	6 mm 20 Nm	6 mm 20 Nm	6 mm 20 Nm	8 mm 38 Nm	8 mm 38 Nm

f) Fit the complete handle on the disc connection and tighten the screw on the handle.

Pre-use check: Check that the valve disc moves smoothly against the seal ring.

1.0 tf502632.EN

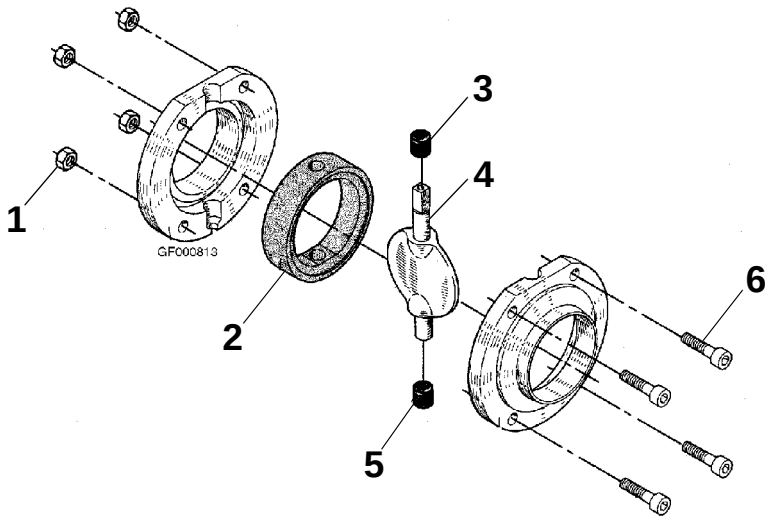

1 Nut
2 Seal ring
3 Bush
4 Valve disc
5 Bush
6 Screw

Actuator

General

The pneumatic actuator is designed so that an axial movement of a piston is transformed into a 90° rotation of the shaft. The torque of the actuator increases at the end of the movement to improve the closing security.

Check operation

WARNING!

Risk of entanglement!
Always disconnect supply circuits prior to changing any parts.

Check by operating the valve manually if it opens and closes correctly.

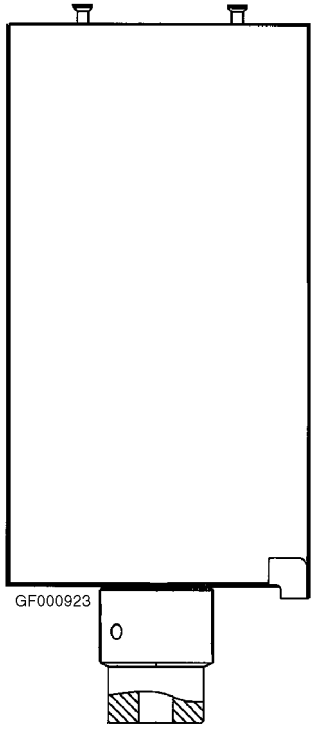

1.0 tf502632.EN

Change spare part kit

Disassemble

WARNING!

Risk of injury!
Normally closed and Normally open valves have a spring under pressure. Be careful when removing the end cap.
Never use compressed air for removing the end cap of the actuator.
Never touch the coupling between the valve body and the actuator if compressed air is supplied to the actuator.
Never service the actuator when it is pressurised.
Never stick your fingers through the valve ports if the valve is supplied with compressed air.
Never touch the coupling between the valve body and the actuator if compressed air is supplied to the actuator.
Always fit the end cap with the “mushrooms” turned outwards and position it correctly before supplying compressed air to the actuator.

Note! The number of spare parts depend on which actuator is used. See spare part list for details.

a) Remove the actuator from the valve by unscrewing the connecting screws on the bracket.

b) **LKLA (Air/Air):** If applicable, unscrew screw (1) and remove the retaining plate (2).

c) Press the end cap (4) into the air cylinder (15) using a vice.

d) Remove the retaining ring (3).

e) Release the pressure on the end cap (4) carefully. **Pay attention to the warnings!**

f) Remove end cap (4) by hand.

g) Remove the piston (8), and for NC and NO valves also the springs (9).

h) Remove the rotating cylinder (12) and the remaining internal parts from the air cylinder(15).

1.0 tf502632.EN

LKLA (NC/NO)

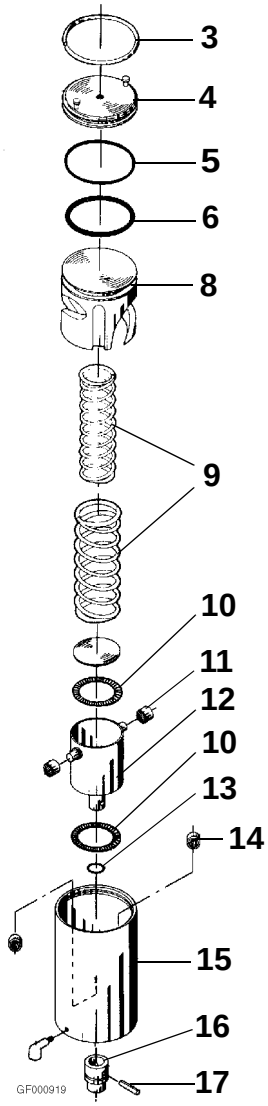

LKLA (Air/Air)

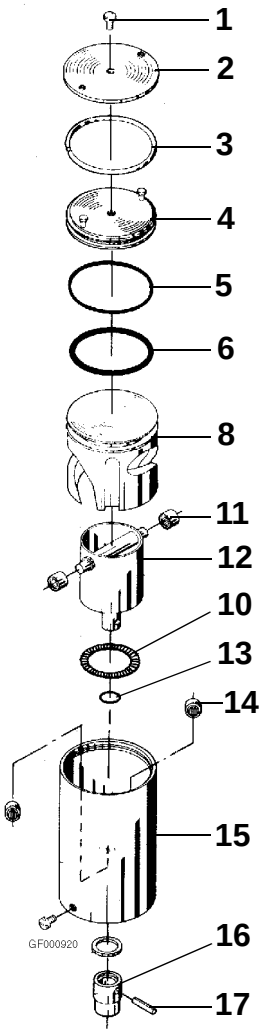

LKLA-T (NC/NO)

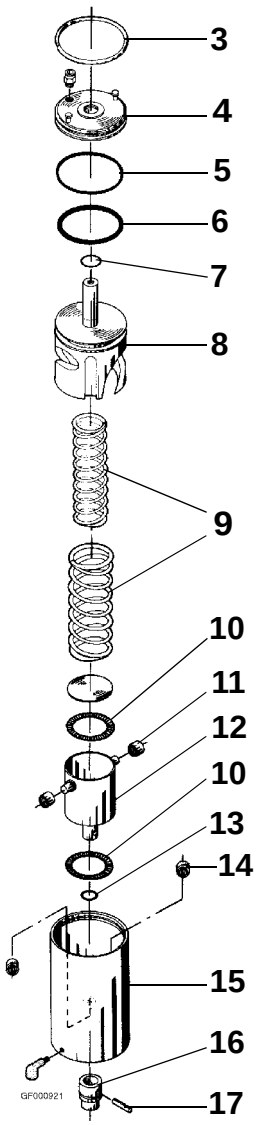

LKLA-T (Air/Air)

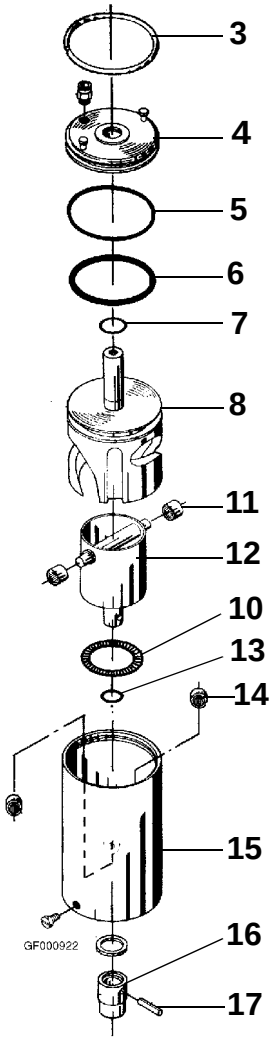

1.0 tf502632.EN

1	Screw	7	O-ring	13	O-ring
2	Retaining plate	8	Piston	14	Needle bearing
3	Retaining ring	9	Spring	15	Air cylinder
4	End cap	10	Thrust bearing	16	Coupling
5	O-ring	11	Needle bearing	17	Pin
6	O-ring	12	Rotating cylinder		

Reassemble

a) Change the parts of the spare part kit; the O-rings, needle bearings, and thrust bearing(s).

b) Check that all bearing and O-ring groves are clean and smooth.

c) Fit O-rings in place.

d) Fit needle bearings (14) in the air cylinder (15).

e) Fit needle bearings (11) on the rotating cylinder (12).

f) Fit thrust bearing(s) (10).

g) Fit the rotating cylinder (12) in the air cylinder (15).

Caution! Fit the piston correctly in relation to the bearings.

h) Fit the springs in the rotating cylinder and fit the piston (8) carefully. (Air/air actuator has no spring.)

i) Press the end cap (4) into the air cylinder (15) (using a vice for air/spring actuator).

j) Fit the retaining ring (3). Release the pressure for air/spring actuator.

k) **LKLA (Air/Air):** If applicable, fit retaining plate (2) and fit and tighten screw (1).

l) Activate the actuator several times to ensure that it operates smoothly.

m) Fit the actuator to the valve by fitting and tightening the connecting screws on the bracket.

1.0 tf502632.EN

LKLA (NC/NO)

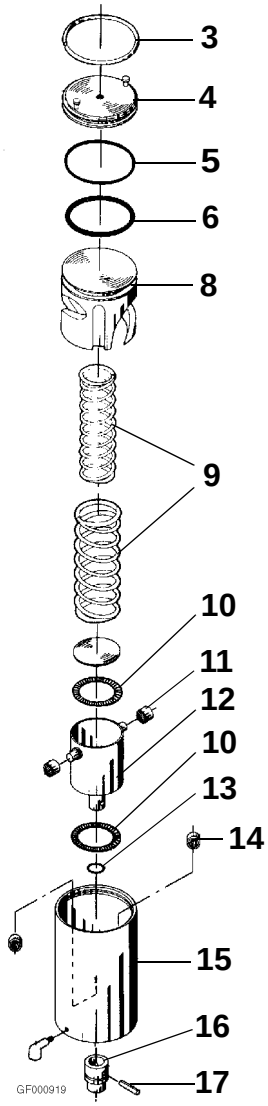

LKLA (Air/Air)

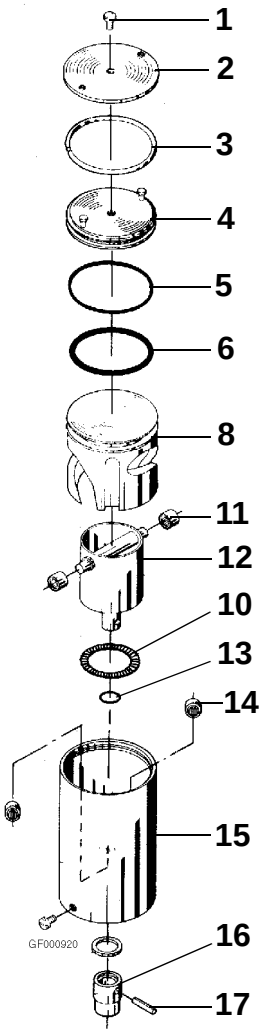

LKLA-T (NC/NO)

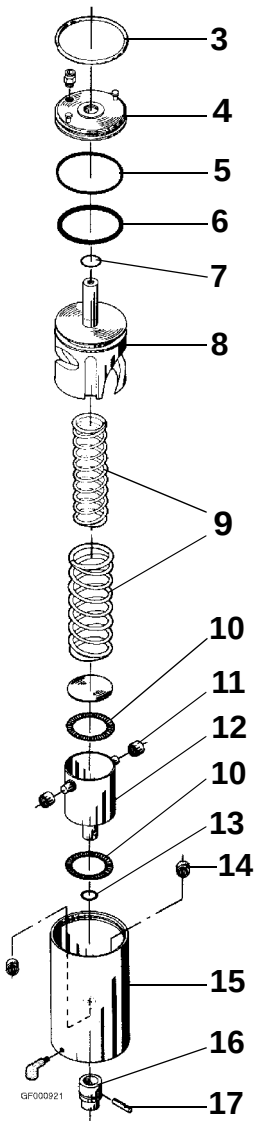

LKLA-T (Air/Air)

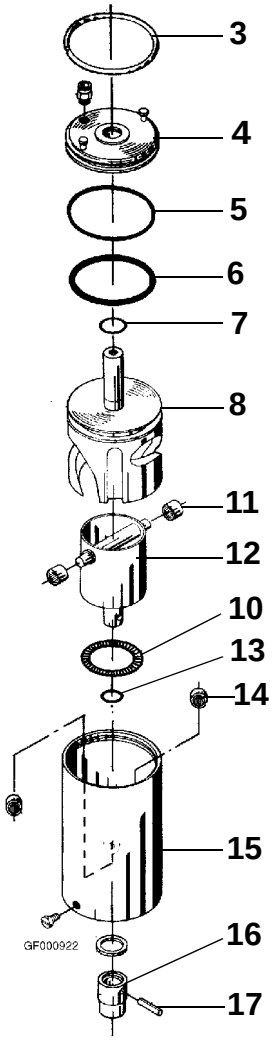

1 Screw
2 Retaining plate
3 Retaining ring
4 End cap
5 O-ring
6 O-ring
7 O-ring
8 Piston
9 Spring
10 Thrust bearing
11 Needle bearing
12 Rotating cylinder
13 O-ring
14 Needle bearing
15 Air cylinder
16 Coupling
17 Pin

Spare parts

Butterfly Valve

Type LKB ISO

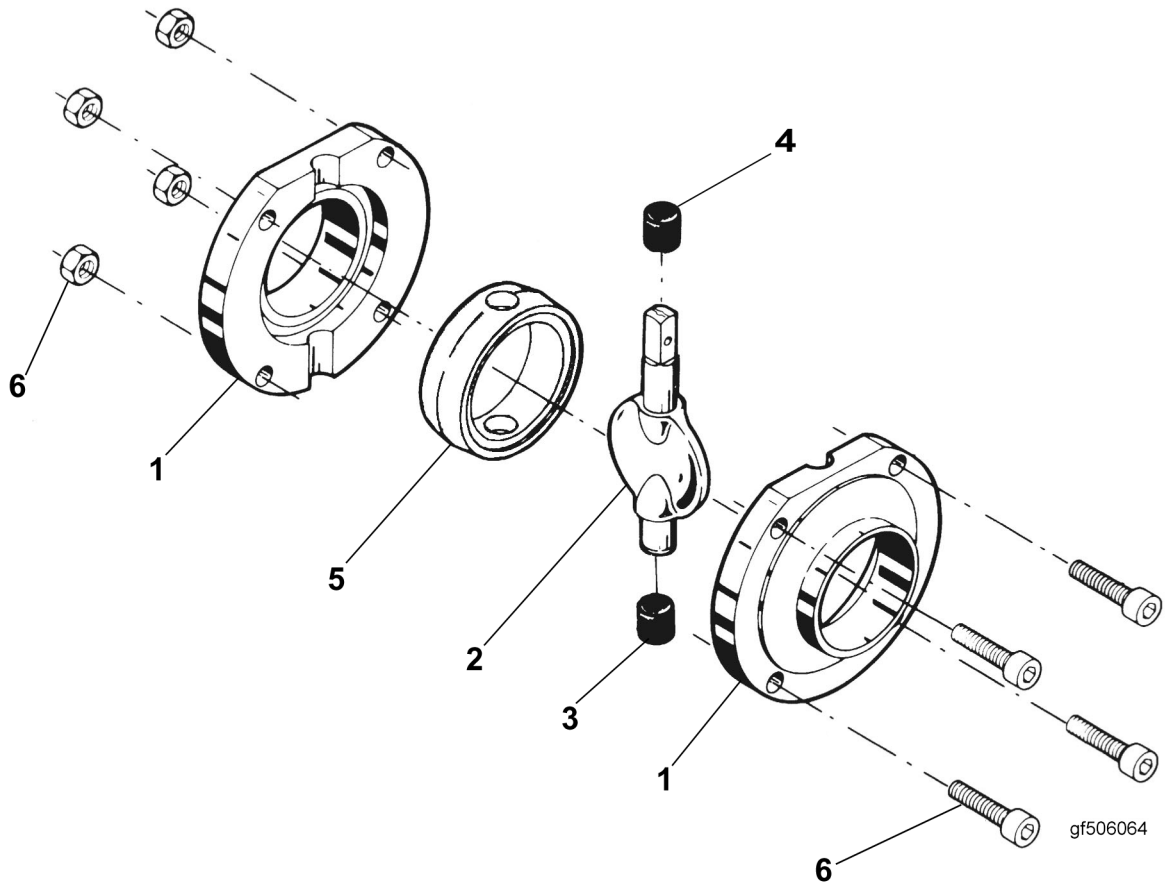

1.0tf502633.en

Spare parts, LKB ISO, 25mm, AISI 304 and 316 for INCH				
Spare part Article No.	**Description**	**Included parts**	**Pos.**	**Qty.**
6-9611-92-3028	Service kit, EPDM	Bush Bush Seal ring	3 4 5	1 1 1
6-9611-92-3034	Service kit, Silicone Q			
6-9611-92-3040	Service kit, FPM			
6-9611-92-3160	Service kit, HNBR			
6-9611-44-3650	Valve body half, AISI 304	-	1	2
6-9611-44-3651	Valve body half, AISI 316L			
6-9611-41-3681	Disc, AISI 316L	-	2	1
6-9611-41-4130	Seal ring, EPDM	-	5	1
6-9611-41-3720	Seal ring, Silicone Q			
6-9611-41-4133	Seal ring, Viton FPM			
6-9611-41-7340	Set of screw M6 + Nut M6	-	6	1

Spare parts, LKB ISO, 38mm, AISI 304 and 316 for INCH				
Spare part Article No.	**Description**	**Included parts**	**Pos.**	**Qty.**
6-9611-92-3029	Service kit, EPDM	Bush Bush Seal ring	3 4 5	1 1 1
6-9611-92-3035	Service kit, Silicone Q			
6-9611-92-3041	Service kit, FPM			
6-9611-92-3161	Service kit, HNBR			
6-9611-92-3183	Service kit, PFA			
6-9611-44-3220	Valve body half, AISI 304	-	1	2
6-9611-44-3221	Valve body half, AISI 316L			
6-9611-41-1691	Disc, AISI 316L	-	2	1
6-9611-41-4090	Seal ring, EPDM	-	5	1
6-9611-41-1740	Seal ring, Silicone Q			
6-9611-41-4093	Seal ring, Viton FPM			
6-9611-41-7340	Set of screw M6 + Nut M6	-	6	1

Spare parts, LKB ISO, 51mm, AISI 304 and 316 for INCH				
Spare part Article No.	**Description**	**Included parts**	**Pos.**	**Qty.**
6-9611-92-3030	Service kit, EPDM	Bush Bush Seal ring	3 4 5	1 1 1
6-9611-92-3036	Service kit, Silicone Q			
6-9611-92-3042	Service kit, FPM			
6-9611-92-3162	Service kit, HNBR			
6-9611-92-3184	Service kit, PFA			
6-9611-44-3230	Valve body half, AISI 304	-	1	2
6-9611-44-3231	Valve body half, AISI 316L			
6-9611-41-1771	Disc, AISI 316L	-	2	1
6-9611-41-4100	Seal ring, EPDM	-	5	1
6-9611-41-1820	Seal ring, Silicone Q			
6-9611-41-4103	Seal ring, Viton FPM			
6-9611-41-7350	Set of screw M8 + Nut M8	-	6	1

Spare parts, LKB ISO, 63,5mm, AISI 304 and 316 for INCH				
Spare part Article No.	**Description**	**Included parts**	**Pos.**	**Qty.**
6-9611-92-3031	Service kit, EPDM	Bush Bush Seal ring	3 4 5	1 1 1
6-9611-92-3037	Service kit, Silicone Q			
6-9611-92-3043	Service kit, FPM			
6-9611-92-3163	Service kit, HNBR			
6-9611-92-3185	Service kit, PFA			

1.0tf502633.en

Spare parts, LKB ISO, 63,5mm, AISI 304 and 316 for INCH				
Spare part Article No.	**Description**	**Included parts**	**Pos.**	**Qty.**
6-9611-44-3240	Valve body half, AISI 304	-	1	2
6-9611-44-3241	Valve body half, AISI 316L			
6-9611-41-1851	Disc, AISI 316L	-	2	1
6-9611-41-4110	Seal ring, EPDM	-	5	1
6-9611-41-1900	Seal ring, Silicone Q			
6-9611-41-4113	Seal ring, Viton FPM			
6-9611-41-7350	Set of screw M8 + Nut M8	-	6	1

Spare parts, LKB ISO, 76mm, AISI 304 and 316 for INCH				
Spare part Article No.	**Description**	**Included parts**	**Pos.**	**Qty.**
6-9611-92-3032	Service kit, EPDM	Bush Bush Seal ring	3 4 5	1 1 1
6-9611-92-3038	Service kit, Silicone Q			
6-9611-92-3044	Service kit, FPM			
6-9611-92-3164	Service kit, HNBR			
6-9611-92-3186	Service kit, PFA			
6-9611-44-3070	Valve body half, AISI 304	-	1	2
6-9611-44-3071	Valve body half, AISI 316L			
6-9611-41-1931	Disc, AISI 316L	-	2	1
6-9611-41-4060	Seal ring, EPDM	-	5	1
6-9611-41-1980	Seal ring, Silicone Q			
6-9611-41-4063	Seal ring, Viton FPM			
6-9611-41-7360	Set of screw M8 + Nut M8	-	6	1

1.0tf502633.en

Spare parts, LKB ISO, 101,6mm, AISI 304 and 316 for INCH				
Spare part Article No.	**Description**	**Included parts**	**Pos.**	**Qty.**
6-9611-92-3033	Service kit, EPDM	Bush Bush Seal ring	3 4 5	1 1 1
6-9611-92-3039	Service kit, Silicone Q			
6-9611-92-3045	Service kit, FPM			
6-9611-92-3165	Service kit, HNBR			
6-9611-92-3187	Service kit, PFA			
6-9611-44-3250	Valve body half, AISI 304	-	1	2
6-9611-44-3251	Valve body half, AISI 316L			
6-9611-41-4120	Seal ring, EPDM	-	5	1
6-9611-41-2070	Seal ring, Silicone Q			
6-9611-41-4123	Seal ring, Viton FPM			
6-9611-41-7370	Set of screw M10 + Nut M10	-	6	1

Spare parts, LKB ISO, NW 25				
Spare part Article No.	**Description**	**Included parts**	**Pos.**	**Qty.**
6-9611-92-3028	Service kit, EPDM	Bush Bush Seal ring	3 4 5	1 1 1
6-9611-92-3034	Service kit, Silicone Q			
6-9611-92-3040	Service kit, FPM			
6-9611-44-3640	Valve body half, AISI 304	-	1	2
6-9611-44-3641	Valve body half, AISI 316L			
6-9611-41-3681	Disc, AISI 316L	-	2	1
6-9611-41-4130	Seal ring, EPDM	-	5	1
6-9611-41-3720	Seal ring, Silicone Q			
6-9611-41-4133	Seal ring, Viton FPM			
6-9611-41-7340	Set of screw M6 + Nut M6	-	6	1

Spare parts, LKB ISO, NW 40				
Spare part Article No.	**Description**	**Included parts**	**Pos.**	**Qty.**
6-9611-92-3029	Service kit, EPDM	Bush Bush Seal ring	3 4 5	1 1 1
6-9611-92-3035	Service kit, Silicone Q			
6-9611-92-3041	Service kit, FPM			
6-9611-44-3040	Valve body half, AISI 304	-	1	2
6-9611-44-3041	Valve body half, AISI 316L			
6-9611-41-1691	Disc, AISI 316L	-	2	1
6-9611-41-4090	Seal ring, EPDM	-	5	1
6-9611-41-1740	Seal ring, Silicone Q			
6-9611-41-4093	Seal ring, Viton FPM			
6-9611-41-7340	Set of screw M6 + Nut M6	-	6	1

Spare parts, LKB ISO, NW 50				
Spare part Article No.	**Description**	**Included parts**	**Pos.**	**Qty.**
6-9611-92-3030	Service kit, EPDM	Bush Bush Seal ring	3 4 5	1 1 1
6-9611-92-3036	Service kit, Silicone Q			
6-9611-92-3042	Service kit, FPM			
6-9611-44-3050	Valve body half, AISI 304	-	1	2
6-9611-44-3051	Valve body half, AISI 316L			
6-9611-41-1771	Disc, AISI 316L	-	2	1
6-9611-41-4100	Seal ring, EPDM	-	5	1
6-9611-41-1820	Seal ring, Silicone Q			
6-9611-41-4103	Seal ring, Viton FPM			
6-9611-41-7350	Set of screw M8 + Nut M8	-	6	1

1.0tf502633.en

Spare parts, LKB ISO, NW 65				
Spare part Article No.	**Description**	**Included parts**	**Pos.**	**Qty.**
6-9611-92-3031	Service kit, EPDM	Bush Bush Seal ring	3 4 5	1 1 1
6-9611-92-3037	Service kit, Silicone Q			
6-9611-92-3043	Service kit, FPM			
6-9611-44-3060	Valve body half, AISI 304	-	1	2
6-9611-44-3061	Valve body half, AISI 316L			
6-9611-41-1851	Disc, AISI 316L	-	2	1
6-9611-41-4110	Seal ring, EPDM	-	5	1
6-9611-41-1900	Seal ring, Silicone Q			
6-9611-41-4113	Seal ring, Viton FPM			
6-9611-41-7350	Set of screw M8 + Nut M8	-	6	1

Spare parts, LKB ISO, NW 80				
Spare part Article No.	**Description**	**Included parts**	**Pos.**	**Qty.**
6-9611-92-3051	Service kit, EPDM	Bush Bush Seal ring	3 4 5	1 1 1
6-9611-92-3052	Service kit, Silicone Q			
6-9611-92-3053	Service kit, FPM			
6-9611-44-3090	Valve body half, AISI 304	-	1	2
6-9611-44-3091	Valve body half, AISI 316L			
6-9611-41-2121	Disc, AISI 316L	-	2	1
6-9611-41-4160	Seal ring, EPDM	-	5	1
6-9611-41-2160	Seal ring, Silicone Q			
6-9611-41-2161	Seal ring, Viton FPM			
6-9611-41-7360	Set of screw M8 + Nut M8	-	6	1

Spare parts, LKB ISO, NW 100				
Spare part Article No.	**Description**	**Included parts**	**Pos.**	**Qty.**
6-9611-92-3033	Service kit, EPDM	Bush Bush Seal ring	3 4 5	1 1 1
6-9611-92-3039	Service kit, Silicone Q			
6-9611-92-3045	Service kit, FPM			
6-9611-44-3080	Valve body half, AISI 304	-	1	2
6-9611-44-3081	Valve body half, AISI 316L			
6-9611-41-4120	Seal ring, EPDM	-	5	1
6-9611-41-2070	Seal ring, Silicone Q			
6-9611-41-4123	Seal ring, Viton FPM			
6-9611-41-7370	Set of screw M10 + Nut M10	-	6	1

1.0tf502633.en

Spare parts, LKB ISO, NW 150				
Spare part Article No.	**Description**	**Included parts**	**Pos.**	**Qty.**
6-9611-92-3046	Service kit, EPDM	Bush Bush Seal ring	3 4 5	1 1 1
6-9611-92-3047	Service kit, Silicone Q			
6-9611-92-3048	Service kit, FPM			
6-9611-44-3670	Valve body half, AISI 304	-	1	2
6-9611-44-3671	Valve body half, AISI 316L			
6-9611-41-4150	Seal ring, EPDM	-	5	1
6-9611-41-3470	Seal ring, Silicone Q			
6-9611-41-4153	Seal ring, Viton FPM			
6-9611-41-7380	Set of screw M10 + Nut M10	-	6	1

1.0tf502633.en

Type LKB-2 DIN

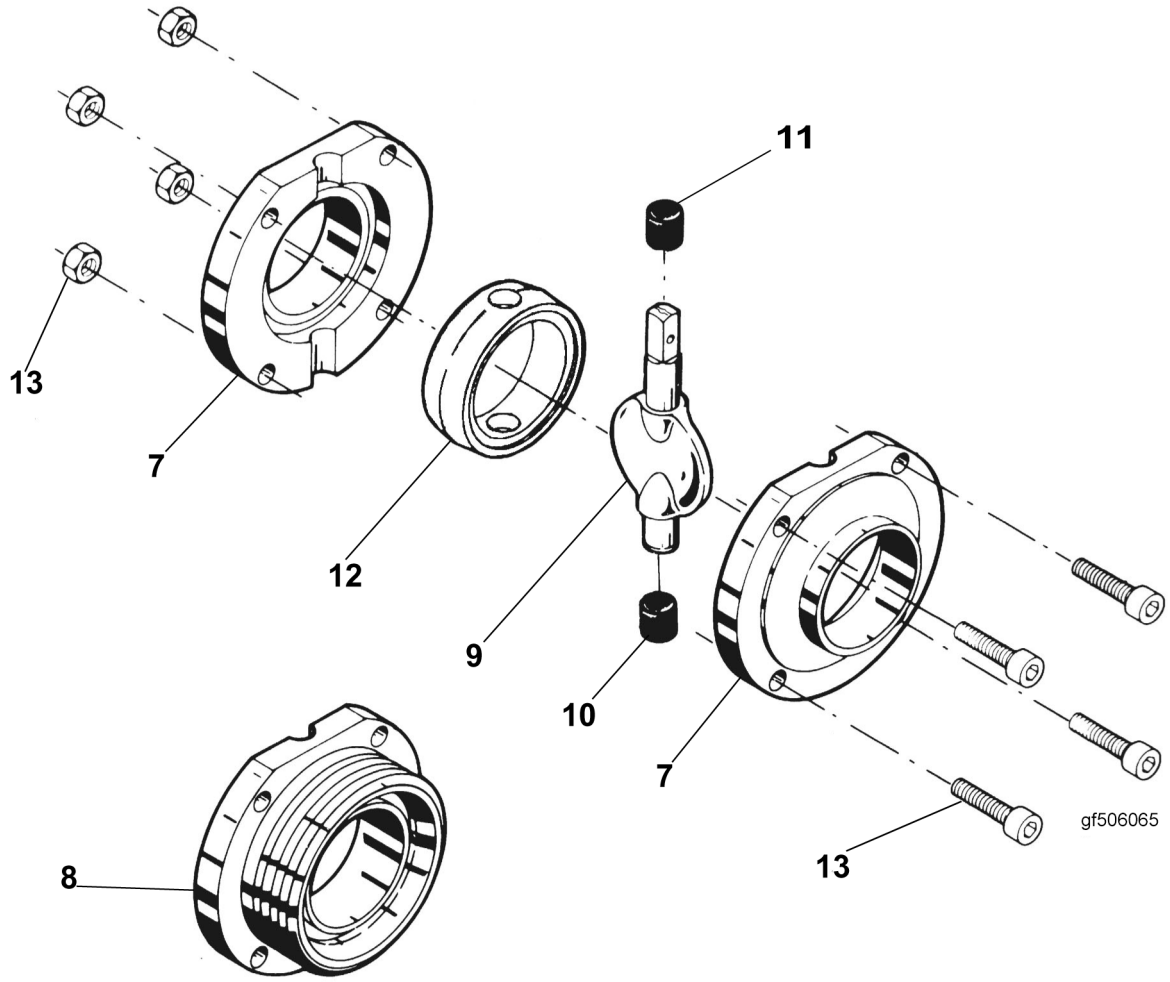

1.0tf502633.en

Spare parts, LKB-2 DIN, NW 25, For valves with bushes				
Spare part Article No.	**Description**	**Included parts**	**Pos.**	**Qty.**
6-9611-92-3075	Service kit, EPDM	Bush Bush Seal ring	10 11 12	1 1 1
6-9611-92-3083	Service kit, Silicone Q			
6-9611-92-3091	Service kit, FPM			
6-9611-92-3210	Service kit, HNBR			
6-9612-32-3601	Valve body half, welding AISI 304	-	7	2
6-9612-32-3602	Valve body half, welding AISI 316L			
6-9612-32-4301	Valve body half, male part AISI 304	-	8	2
6-9612-32-4302	Valve body half, male part AISI 316L			
6-9612-07-3604	Disc, AISI 316L	-	9	1

Spare parts, LKB-2 DIN, NW 25, For valves with bushes				
Spare part Article No.	**Description**	**Included parts**	**Pos.**	**Qty.**
6-9612-07-0001	Seal ring, EPDM	-	12	1
6-9612-07-0901	Seal ring, Silicone Q			
6-9612-07-1801	Seal ring, Viton FPM			
6-9611-41-7340	Set of screw M6 + Nut M6	-	13	1

Spare parts, LKB-2 DIN, NW 32, For valves with bushes				
Spare part Article No.	**Description**	**Included parts**	**Pos.**	**Qty.**
6-9611-92-3076	Service kit, EPDM	Bush Bush Seal ring	10 11 12	1 1 1
6-9611-92-3084	Service kit, Silicone Q			
6-9611-92-3092	Service kit, FPM			
6-9611-92-3211	Service kit, HNBR			
6-9612-32-3701	Valve body half, welding AISI 304	-	7	2
6-9612-32-3702	Valve body half, welding AISI 316L			
6-9612-32-4401	Valve body half, male part AISI 304	-	8	2
6-9612-32-4402	Valve body half, male part AISI 316L			
6-9612-07-3704	Disc, AISI 316L	-	9	1
6-9612-07-0101	Seal ring, EPDM	-	12	1
6-9612-07-1001	Seal ring, Silicone Q			
6-9612-07-1901	Seal ring, Viton FPM			
6-9611-41-7340	Set of screw M6 + Nut M6	-	13	1

Spare parts, LKB-2 DIN, NW 40, For valves with bushes				
Spare part Article No.	**Description**	**Included parts**	**Pos.**	**Qty.**
6-9611-92-3077	Service kit, EPDM	Bush Bush Seal ring	10 11 12	1 1 1
6-9611-92-3085	Service kit, Silicone Q			
6-9611-92-3093	Service kit, FPM			
6-9611-92-3212	Service kit, HNBR			
6-9611-92-3191	Service kit, PFA			
6-9612-32-3801	Valve body half, welding AISI 304	-	7	2
6-9612-32-3802	Valve body half, welding AISI 316L			
6-9612-32-4501	Valve body half, male part AISI 304	-	8	2
6-9612-32-4502	Valve body half, male part AISI 316L			

1.0tf502633.en

Spare parts, LKB-2 DIN, NW 40, For valves with bushes				
Spare part Article No.	**Description**	**Included parts**	**Pos.**	**Qty.**
6-9612-07-3804	Disc, AISI 316L	-	9	1
6-9612-07-0201	Seal ring, EPDM	-	12	1
6-9612-07-1101	Seal ring, Silicone Q			
6-9612-07-2001	Seal ring, Viton FPM			
6-9611-41-7340	Set of screw M6 + Nut M6	-	13	1

Spare parts, LKB-2 DIN, NW 50, For valves with bushes				
Spare part Article No.	**Description**	**Included parts**	**Pos.**	**Qty.**
6-9611-92-3078	Service kit, EPDM	Bush Bush Seal ring	10 11 12	1 1 1
6-9611-92-3086	Service kit, Silicone Q			
6-9611-92-3094	Service kit, FPM			
6-9611-92-3213	Service kit, HNBR			
6-9611-92-3192	Service kit, PFA			
6-9612-32-3901	Valve body half, welding AISI 304	-	7	2
6-9612-32-3902	Valve body half, welding AISI 316L			
6-9612-32-4601	Valve body half, male part AISI 304	-	8	2
6-9612-32-4602	Valve body half, male part AISI 316L			
6-9612-07-3904	Disc, AISI 316L	-	9	1
6-9612-07-0301	Seal ring, EPDM	-	12	1
6-9612-07-1201	Seal ring, Silicone Q			
6-9612-07-2101	Seal ring, Viton FPM			
6-9611-41-7350	Set of screw M8 + Nut M8	-	13	1

Spare parts, LKB-2 DIN, NW 65, For valves with bushes				
Spare part Article No.	**Description**	**Included parts**	**Pos.**	**Qty.**
6-9611-92-3079	Service kit, EPDM	Bush Bush Seal ring	10 11 12	1 1 1
6-9611-92-3087	Service kit, Silicone Q			
6-9611-92-3095	Service kit, FPM			
6-9611-92-3214	Service kit, HNBR			
6-9611-92-3193	Service kit, PFA			
6-9612-32-4001	Valve body half, welding AISI 304	-	7	2
6-9612-32-4002	Valve body half, welding AISI 316L			

1.0tf502633.en

Spare parts, LKB-2 DIN, NW 65, For valves with bushes				
Spare part Article No.	**Description**	**Included parts**	**Pos.**	**Qty.**
6-9612-32-4701	Valve body half, male part AISI 304	-	8	2
6-9612-32-4702	Valve body half, male part AISI 316L			
6-9612-07-4004	Disc, AISI 316L	-	9	1
6-9612-07-0401	Seal ring, EPDM	-	12	1
6-9612-07-1301	Seal ring, Silicone Q			
6-9612-07-2201	Seal ring, Viton FPM			
6-9611-41-7360	Set of screw M8 + Nut M8	-	13	1

Spare parts, LKB-2 DIN, NW 80, For valves with bushes				
Spare part Article No.	**Description**	**Included parts**	**Pos.**	**Qty.**
6-9611-92-3080	Service kit, EPDM	Bush Bush Seal ring	10 11 12	1 1 1
6-9611-92-3088	Service kit, Silicone Q			
6-9611-92-3096	Service kit, FPM			
6-9611-92-3215	Service kit, HNBR			
6-9611-92-3194	Service kit, PFA			
6-9612-32-4101	Valve body half, welding AISI 304	-	7	2
6-9612-32-4102	Valve body half, welding AISI 316L			
6-9612-32-4801	Valve body half, male part AISI 304	-	8	2
6-9612-32-4802	Valve body half, male part AISI 316L			
6-9612-07-4104	Disc, AISI 316L	-	9	1
6-9612-07-0501	Seal ring, EPDM	-	12	1
6-9612-07-1401	Seal ring, Silicone Q			
6-9612-07-2301	Seal ring, Viton FPM			
6-9611-41-7360	Set of screw M8 + Nut M8	-	13	1

Spare parts, LKB-2 DIN, NW 100, For valves with bushes				
Spare part Article No.	**Description**	**Included parts**	**Pos.**	**Qty.**
6-9611-92-3081	Service kit, EPDM	Bush Bush Seal ring	10 11 12	1 1 1
6-9611-92-3089	Service kit, Silicone Q			
6-9611-92-3097	Service kit, FPM			
6-9611-92-3216	Service kit, HNBR			
6-9611-92-3195	Service kit, PFA			

1.0tf502633.en

Spare parts, LKB-2 DIN, NW 100, For valves with bushes				
Spare part Article No.	**Description**	**Included parts**	**Pos.**	**Qty.**
6-9612-32-4201	Valve body half, welding AISI 304	-	7	2
6-9612-32-4202	Valve body half, welding AISI 316L			
6-9612-32-4901	Valve body half, male part AISI 304	-	8	2
6-9612-32-4902	Valve body half, male part AISI 316L			
6-9612-07-4204	Disc, AISI 316L	-	9	1
6-9612-07-0601	Seal ring, EPDM	-	12	1
6-9612-07-1501	Seal ring, Silicone Q			
6-9612-07-2401	Seal ring, Viton FPM			
6-9611-41-7370	Set of screw M10 + Nut M10	-	13	1

Spare parts, LKB-2 DIN, NW 125, For valves with bushes				
Spare part Article No.	**Description**	**Included parts**	**Pos.**	**Qty.**
6-9611-92-3082	Service kit, EPDM	Bush Bush Seal ring	10 11 12	1 1 1
6-9611-92-3090	Service kit, Silicone Q			
6-9611-92-3098	Service kit, FPM			
6-9611-92-3217	Service kit, HNBR			
6-9612-07-7401	Valve body half, welding AISI 304	-	7	2
6-9612-07-7402	Valve body half, welding AISI 316L			
6-9612-07-7201	Valve body half, male part AISI 304	-	8	2
6-9612-07-7202	Valve body half, male part AISI 316L			
6-9612-07-6904	Disc, AISI 316L	-	9	1
6-9612-07-7101	Seal ring, EPDM	-	12	1
6-9612-07-8301	Seal ring, Silicone Q			
6-9612-07-8401	Seal ring, Viton FPM			
6-9611-41-7770	Set of screw M10 + Nut M10	-	13	1

Spare parts, LKB-2 DIN, NW 25, For valves without bushes				
Spare part Article No.	**Description**	**Included parts**	**Pos.**	**Qty.**
6-9612-07-2701	Valve body half, welding AISI 304	-	7	2
6-9612-07-2702	Valve body half, welding AISI 316L			

1.0tf502633.en

Spare parts, LKB-2 DIN, NW 25, For valves without bushes				
Spare part Article No.	**Description**	**Included parts**	**Pos.**	**Qty.**
6-9612-06-1301	Valve body half, male part AISI 304	-	8	2
6-9612-06-1302	Valve body half, male part AISI 316L			
6-9612-07-3604	Disc, AISI 316L	-	9	1
6-9612-07-0001	Seal ring, EPDM	-	12	1
6-9612-07-0901	Seal ring, Silicone Q			
6-9612-07-1801	Seal ring, Viton FPM			
6-9611-41-7340	Set of screw M6 + Nut M6	-	13	1

Spare parts, LKB-2 DIN, NW 32, For valves without bushes				
Spare part Article No.	**Description**	**Included parts**	**Pos.**	**Qty.**
6-9612-07-2801	Valve body half, welding AISI 304	-	7	2
6-9612-07-2802	Valve body half, welding AISI 316L			
6-9612-06-1901	Valve body half, male part AISI 304	-	8	2
6-9612-06-1902	Valve body half, male part AISI 316L			
6-9612-07-3704	Disc, AISI 316L	-	9	1
6-9612-07-0101	Seal ring, EPDM	-	12	1
6-9612-07-1001	Seal ring, Silicone Q			
6-9612-07-1901	Seal ring, Viton FPM			
6-9611-41-7340	Set of screw M6 + Nut M6	-	13	1

1.0tf502633.en

Spare parts, LKB-2 DIN, NW 40, For valves without bushes				
Spare part Article No.	**Description**	**Included parts**	**Pos.**	**Qty.**
6-9612-07-2901	Valve body half, welding AISI 304	-	7	2
6-9612-07-2902	Valve body half, welding AISI 316L			
6-9612-06-1401	Valve body half, male part AISI 304	-	8	2
6-9612-06-1402	Valve body half, male part AISI 316L			
6-9612-07-3804	Disc, AISI 316L	-	9	1
6-9612-07-0201	Seal ring, EPDM	-	12	1
6-9612-07-1101	Seal ring, Silicone Q			
6-9612-07-2001	Seal ring, Viton FPM			
6-9611-41-7340	Set of screw M6 + Nut M6	-	13	1

Spare parts, LKB-2 DIN, NW 50, For valves without bushes				
Spare part Article No.	**Description**	**Included parts**	**Pos.**	**Qty.**
6-9612-07-3001	Valve body half, welding AISI 304	-	7	2
6-9612-07-3002	Valve body half, welding AISI 316L			
6-9612-06-1501	Valve body half, male part AISI 304	-	8	2
6-9612-06-1502	Valve body half, male part AISI 316L			
6-9612-07-3904	Disc, AISI 316L	-	9	1
6-9612-07-0301	Seal ring, EPDM	-	12	1
6-9612-07-1201	Seal ring, Silicone Q			
6-9612-07-2101	Seal ring, Viton FPM			
6-9611-41-7350	Set of screw M8 + Nut M8	-	13	1

Spare parts, LKB-2 DIN, NW 65, For valves without bushes				
Spare part Article No.	**Description**	**Included parts**	**Pos.**	**Qty.**
6-9612-07-3101	Valve body half, welding AISI 304	-	7	2
6-9612-07-3102	Valve body half, welding AISI 316L			
6-9612-06-1601	Valve body half, male part AISI 304	-	8	2
6-9612-06-1602	Valve body half, male part AISI 316L			
6-9612-07-4004	Disc, AISI 316L	-	9	1
6-9612-07-0401	Seal ring, EPDM	-	12	1
6-9612-07-1301	Seal ring, Silicone Q			
6-9612-07-2201	Seal ring, Viton FPM			
6-9611-41-7360	Set of screw M8 + Nut M8	-	13	1

Spare parts, LKB-2 DIN, NW 80, For valves without bushes				
Spare part Article No.	**Description**	**Included parts**	**Pos.**	**Qty.**
6-9612-07-3201	Valve body half, welding AISI 304	-	7	2
6-9612-07-3202	Valve body half, welding AISI 316L			

1.0tf502633.en

Spare parts, LKB-2 DIN, NW 80, For valves without bushes				
Spare part Article No.	**Description**	**Included parts**	**Pos.**	**Qty.**
6-9612-06-1701	Valve body half, male part AISI 304	-	8	2
6-9612-06-1702	Valve body half, male part AISI 316L			
6-9612-07-4104	Disc, AISI 316L	-	9	1
6-9612-07-0501	Seal ring, EPDM	-	12	1
6-9612-07-1401	Seal ring, Silicone Q			
6-9612-07-2301	Seal ring, Viton FPM			
6-9611-41-7360	Set of screw M8 + Nut M8	-	13	1

Spare parts, LKB-2 DIN, NW 100, For valves without bushes				
Spare part Article No.	**Description**	**Included parts**	**Pos.**	**Qty.**
6-9612-07-3301	Valve body half, welding AISI 304	-	7	2
6-9612-07-3302	Valve body half, welding AISI 316L			
6-9612-06-1801	Valve body half, male part AISI 304	-	8	2
6-9612-06-1802	Valve body half, male part AISI 316L			
6-9612-07-4204	Disc, AISI 316L	-	9	1
6-9612-07-0601	Seal ring, EPDM	-	12	1
6-9612-07-1501	Seal ring, Silicone Q			
6-9612-07-2401	Seal ring, Viton FPM			
6-9611-41-7370	Set of screw M10 + Nut M10	-	13	1

Spare parts, LKB-2 DIN, NW 125, For valves without bushes				
Spare part Article No.	**Description**	**Included parts**	**Pos.**	**Qty.**
6-9612-07-7401	Valve body half, welding AISI 304	-	7	2
6-9612-07-7402	Valve body half, welding AISI 316L			
6-9612-07-7201	Valve body half, male part AISI 304	-	8	2
6-9612-07-7202	Valve body half, male part AISI 316L			
6-9612-07-6904	Disc, AISI 316L	-	9	1
6-9612-07-7101	Seal ring, EPDM	-	12	1
6-9612-07-8301	Seal ring, Silicone Q			
6-9612-07-8401	Seal ring, Viton FPM			
6-9611-41-7770	Set of screw M10 + Nut M10	-	13	1

1.0tf502633.en

Type LKB-F

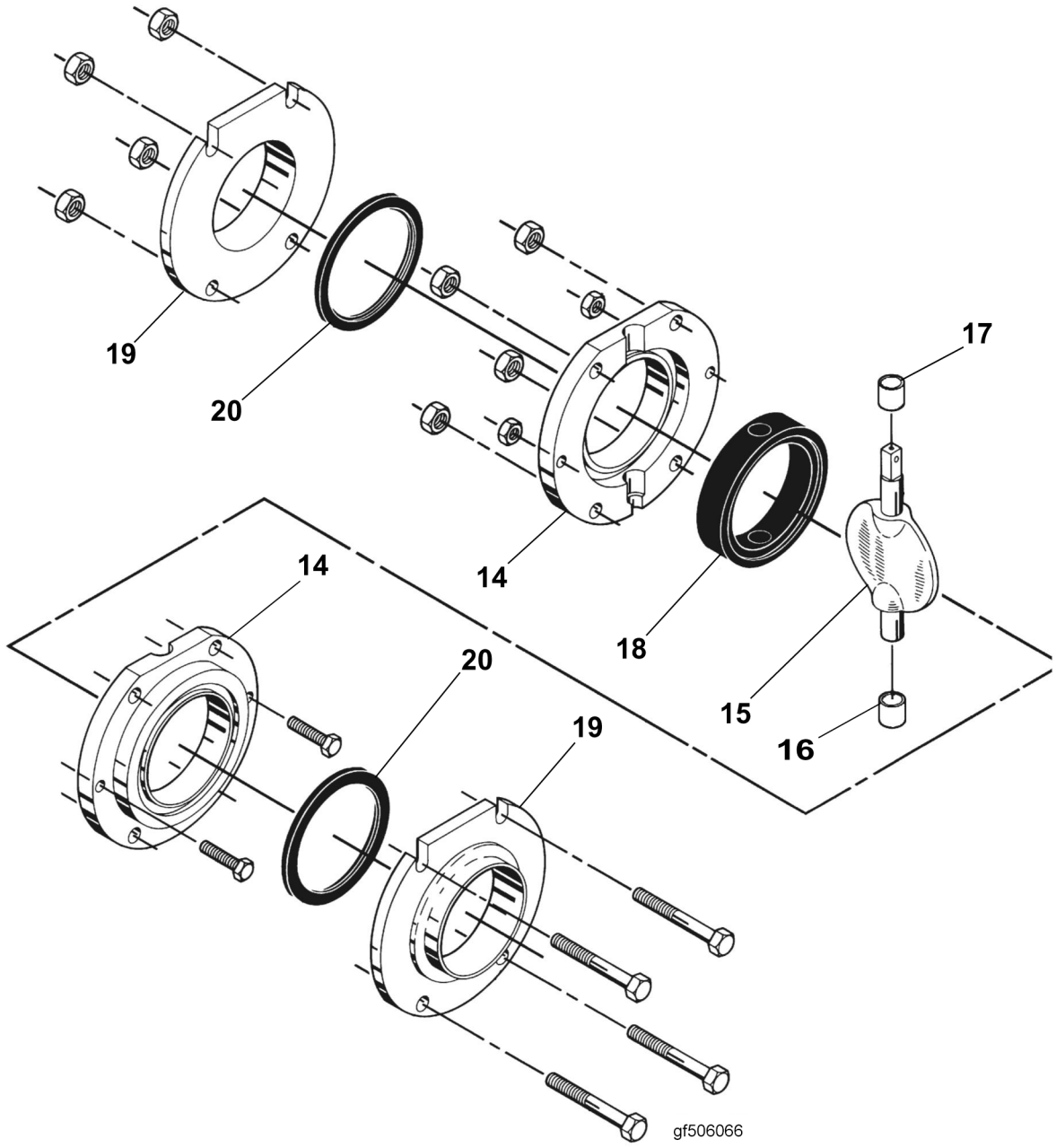

1.0tf502633.en

Spare parts, LKB-F, 25mm, ISO				
Spare part Article No.	**Description**	**Included parts**	**Pos.**	**Qty.**
6-9611-92-3058	Service kit, EPDM	Bush Bush Seal ring Seal ring	16 17 18 20	1 1 1 2
6-9611-92-3064	Service kit, Silicone Q			
6-9611-92-3070	Service kit, FPM			

Spare parts, LKB-F, 25mm, ISO				
Spare part Article No.	**Description**	**Included parts**	**Pos.**	**Qty.**
6-9612-40-2410	Valve body half, welding AISI 316L	-	14	2
6-9612-40-2425	Valve body half, welding AISI 304			
6-9611-41-3681	Disc, AISI 316L	-	15	1
6-9611-41-4130	Seal ring, EPDM	-	18	1
6-9611-41-3720	Seal ring, Silicone Q			
6-9611-41-4133	Seal ring, Viton FPM			
6-9612-40-0101	Set of screws and nut.	-	-	1
6-9612-40-2510	Flange, AISI 316L	-	19	2
6-9612-40-2525	Flange, AISI 304			
6-9612-40-2631	Seal ring, EPDM	-	20	2
6-9612-40-2641	Seal ring, Silicone Q			
6-9612-40-2651	Seal ring, Viton FPM			

Spare parts, LKB-F, 38mm, ISO				
Spare part Article No.	**Description**	**Included parts**	**Pos.**	**Qty.**
6-9611-92-3059	Service kit, EPDM	Bush Bush Seal ring Seal ring	16 17 18 20	1 1 1 2
6-9611-92-3065	Service kit, Silicone Q			
6-9611-92-3071	Service kit, FPM			
6-9612-40-2411	Valve body half, welding AISI 316L	-	14	2
6-9612-40-2426	Valve body half, welding AISI 304			
6-9611-41-3691	Disc, AISI 316L	-	15	1
6-9611-41-4090	Seal ring, EPDM	-	18	1
6-9611-41-1740	Seal ring, Silicone Q			
6-9611-41-3693	Seal ring, Viton FPM			
6-9612-40-0101	Set of screws and nut.	-	-	1
6-9612-40-2511	Flange, AISI 316L	-	19	2
6-9612-40-2526	Flange, AISI 304			
6-9612-40-2632	Seal ring, EPDM	-	20	2
6-9612-40-2642	Seal ring, Silicone Q			
6-9612-40-2652	Seal ring, Viton FPM			

1.0tf502633.en

Spare parts, LKB-F, 51mm, ISO				
Spare part Article No.	**Description**	**Included parts**	**Pos.**	**Qty.**
6-9611-92-3060	Service kit, EPDM	Bush Bush Seal ring Seal ring	16 17 18 20	1 1 1 2
6-9611-92-3066	Service kit, Silicone Q			
6-9611-92-3072	Service kit, FPM			
6-9612-40-2412	Valve body half, welding AISI 316L	-	14	2
6-9612-40-2427	Valve body half, welding AISI 304			
6-9611-41-1771	Disc, AISI 316L	-	15	1
6-9611-41-4100	Seal ring, EPDM	-	18	1
6-9611-41-1820	Seal ring, Silicone Q			
6-9611-41-4103	Seal ring, Viton FPM			
6-9612-40-0102	Set of screws and nut.	-	-	1
6-9612-40-2512	Flange, AISI 316L	-	19	2
6-9612-40-2527	Flange, AISI 304			
6-9612-40-2633	Seal ring, EPDM	-	20	2
6-9612-40-2643	Seal ring, Silicone Q			
6-9612-40-2653	Seal ring, Viton FPM			

1.0tf502633.en

Spare parts, LKB-F, 63,5mm, ISO				
Spare part Article No.	**Description**	**Included parts**	**Pos.**	**Qty.**
6-9611-92-3061	Service kit, EPDM	Bush Bush Seal ring Seal ring	16 17 18 20	1 1 1 2
6-9611-92-3067	Service kit, Silicone Q			
6-9611-92-3073	Service kit, FPM			
6-9612-40-2413	Valve body half, welding AISI 316L	-	14	2
6-9612-40-2428	Valve body half, welding AISI 304			
6-9611-41-1851	Disc, AISI 316L	-	15	1
6-9611-41-4110	Seal ring, EPDM	-	18	1
6-9611-41-1900	Seal ring, Silicone Q			
6-9611-41-4113	Seal ring, Viton FPM			
6-9612-40-0102	Set of screws and nut.	-	-	1
6-9612-40-2513	Flange, AISI 316L	-	19	2
6-9612-40-2528	Flange, AISI 304			
6-9612-40-2634	Seal ring, EPDM	-	20	2
6-9612-40-2644	Seal ring, Silicone Q			
6-9612-40-2654	Seal ring, Viton FPM			

Spare parts, LKB-F, 76mm, ISO				
Spare part Article No.	**Description**	**Included parts**	**Pos.**	**Qty.**
6-9611-92-3062	Service kit, EPDM	Bush Bush Seal ring Seal ring	16 17 18 20	1 1 1 2
6-9611-92-3068	Service kit, Silicone Q			
6-9611-92-3074	Service kit, FPM			
6-9612-40-2414	Valve body half, welding AISI 316L	-	14	2
6-9612-40-2429	Valve body half, welding AISI 304			
6-9611-41-1931	Disc, AISI 316L	-	15	1
6-9611-41-4060	Seal ring, EPDM	-	18	1
6-9611-41-1980	Seal ring, Silicone Q			
6-9611-41-4063	Seal ring, Viton FPM			
6-9612-40-0103	Set of screws and nut.	-	-	1
6-9612-40-2514	Flange, AISI 316L	-	19	2
6-9612-40-2529	Flange, AISI 304			
6-9612-40-2635	Seal ring, EPDM	-	20	2
6-9612-40-2645	Seal ring, Silicone Q			
6-9612-40-2655	Seal ring, Viton FPM			

1.0tf502633.en

Spare parts, LKB-F, 101,6mm, ISO				
Spare part Article No.	**Description**	**Included parts**	**Pos.**	**Qty.**
6-9611-92-3063	Service kit, EPDM	Bush Bush Seal ring Seal ring	16 17 18 20	1 1 1 2
6-9611-92-3069	Service kit, Silicone Q			
6-9611-92-3099	Service kit, FPM			
6-9612-40-2415	Valve body half, welding AISI 316L	-	14	2
6-9612-40-2430	Valve body half, welding AISI 304			
6-9612-04-6302	Disc, AISI 316L	-	15	1
6-9611-41-4120	Seal ring, EPDM	-	18	1
6-9611-41-2070	Seal ring, Silicone Q			
6-9611-41-4123	Seal ring, Viton FPM			
6-9612-40-0104	Set of screws and nut.	-	-	1
6-9612-40-2515	Flange, AISI 316L	-	19	2
6-9612-40-2530	Flange, AISI 304			
6-9612-40-2636	Seal ring, EPDM	-	20	2
6-9612-40-2646	Seal ring, Silicone Q			
6-9612-40-2656	Seal ring, Viton FPM			

Spare parts, LKB-F, NW 25, DIN				
Spare part Article No.	**Description**	**Included parts**	**Pos.**	**Qty.**
6-9611-92-3100	Service kit, EPDM	Bush Bush Seal ring Seal ring	16 17 18 20	1 1 1 2
6-9611-92-3109	Service kit, Silicone Q			
6-9611-92-3118	Service kit, FPM			
6-9612-40-2401	Valve body half, welding AISI 316L	-	14	2
6-9612-40-2416	Valve body half, welding AISI 304			
6-9612-07-3604	Disc, AISI 316L	-	15	1
6-9612-07-0001	Seal ring, EPDM	-	18	1
6-9612-07-0901	Seal ring, Silicone Q			
6-9612-07-1801	Seal ring, Viton FPM			
6-9612-40-0101	Set of screws and nut.	-	-	1
6-9612-40-2501	Flange, AISI 316L	-	19	2
6-9612-40-2516	Flange, AISI 304			
6-9612-40-2601	Seal ring, EPDM	-	20	2
6-9612-40-2611	Seal ring, Silicone Q			
6-9612-40-2621	Seal ring, Viton FPM			

1.0tf502633.en

Spare parts, LKB-F, NW 32, DIN				
Spare part Article No.	**Description**	**Included parts**	**Pos.**	**Qty.**
6-9611-92-3101	Service kit, EPDM	Bush Bush Seal ring Seal ring	16 17 18 20	1 1 1 2
6-9611-92-3110	Service kit, Silicone Q			
6-9611-92-3119	Service kit, FPM			
6-9612-40-2402	Valve body half, welding AISI 316L	-	14	2
6-9612-40-2417	Valve body half, welding AISI 304			
6-9612-07-3704	Disc, AISI 316L	-	15	1
6-9612-07-0101	Seal ring, EPDM	-	18	1
6-9612-07-1001	Seal ring, Silicone Q			
6-9612-07-1901	Seal ring, Viton FPM			
6-9612-40-0101	Set of screws and nut.	-	-	1
6-9612-40-2502	Flange, AISI 316L	-	19	2
6-9612-40-2517	Flange, AISI 304			
6-9612-40-2602	Seal ring, EPDM	-	20	2
6-9612-40-2612	Seal ring, Silicone Q			
6-9612-40-2622	Seal ring, Viton FPM			

Spare parts, LKB-F, NW 40, DIN				
Spare part Article No.	**Description**	**Included parts**	**Pos.**	**Qty.**
6-9611-92-3102	Service kit, EPDM	Bush Bush Seal ring Seal ring	16 17 18 20	1 1 1 2
6-9611-92-3111	Service kit, Silicone Q			
6-9611-92-3120	Service kit, FPM			
6-9612-40-2403	Valve body half, welding AISI 316L	-	14	2
6-9612-40-2418	Valve body half, welding AISI 304			
6-9612-07-3804	Disc, AISI 316L	-	15	1
6-9612-07-0201	Seal ring, EPDM	-	18	1
6-9612-07-1101	Seal ring, Silicone Q			
6-9612-07-2001	Seal ring, Viton FPM			
6-9612-40-0101	Set of screws and nut.	-	-	1
6-9612-40-2503	Flange, AISI 316L	-	19	2
6-9612-40-2518	Flange, AISI 304			
6-9612-40-2603	Seal ring, EPDM	-	20	2
6-9612-40-2613	Seal ring, Silicone Q			
6-9612-40-2623	Seal ring, Viton FPM			

1.0tf502633.en

Spare parts, LKB-F, NW 50, DIN				
Spare part Article No.	**Description**	**Included parts**	**Pos.**	**Qty.**
6-9611-92-3103	Service kit, EPDM	Bush Bush Seal ring Seal ring	16 17 18 20	1 1 1 2
6-9611-92-3112	Service kit, Silicone Q			
6-9611-92-3121	Service kit, FPM			
6-9612-40-2404	Valve body half, welding AISI 316L	-	14	2
6-9612-40-2419	Valve body half, welding AISI 304			
6-9612-07-3904	Disc, AISI 316L	-	15	1
6-9612-07-0301	Seal ring, EPDM	-	18	1
6-9612-07-1201	Seal ring, Silicone Q			
6-9612-07-2101	Seal ring, Viton FPM			
6-9612-40-0102	Set of screws and nut.	-	-	1
6-9612-40-2504	Flange, AISI 316L	-	19	2
6-9612-40-2519	Flange, AISI 304			
6-9612-40-2604	Seal ring, EPDM	-	20	2
6-9612-40-2614	Seal ring, Silicone Q			
6-9612-40-2624	Seal ring, Viton FPM			

Spare parts, LKB-F, NW 65, DIN				
Spare part Article No.	**Description**	**Included parts**	**Pos.**	**Qty.**
6-9611-92-3104	Service kit, EPDM	Bush Bush Seal ring Seal ring	16 17 18 20	1 1 1 2
6-9611-92-3113	Service kit, Silicone Q			
6-9611-92-3122	Service kit, FPM			
6-9612-40-2405	Valve body half, welding AISI 316L	-	14	2
6-9612-40-2420	Valve body half, welding AISI 304			
6-9612-07-4004	Disc, AISI 316L	-	15	1
6-9612-07-0401	Seal ring, EPDM	-	18	1
6-9612-07-1301	Seal ring, Silicone Q			
6-9612-07-2201	Seal ring, Viton FPM			
6-9612-40-0103	Set of screws and nut.	-	-	1
6-9612-40-2505	Flange, AISI 316L	-	19	2
6-9612-40-2520	Flange, AISI 304			
6-9612-40-2605	Seal ring, EPDM	-	20	2
6-9612-40-2615	Seal ring, Silicone Q			
6-9612-40-2625	Seal ring, Viton FPM			

1.0tf502633.en

Spare parts, LKB-F, NW 80, DIN				
Spare part Article No.	**Description**	**Included parts**	**Pos.**	**Qty.**
6-9611-92-3105	Service kit, EPDM	Bush Bush Seal ring Seal ring	16 17 18 20	1 1 1 2
6-9611-92-3114	Service kit, Silicone Q			
6-9611-92-3123	Service kit, FPM			
6-9612-40-2406	Valve body half, welding AISI 316L	-	14	2
6-9612-40-2421	Valve body half, welding AISI 304			
6-9612-07-4104	Disc, AISI 316L	-	15	1
6-9612-07-0501	Seal ring, EPDM	-	18	1
6-9612-07-1401	Seal ring, Silicone Q			
6-9612-07-2301	Seal ring, Viton FPM			
6-9612-40-0103	Set of screws and nut.	-	-	1
6-9612-40-2506	Flange, AISI 316L	-	19	2
6-9612-40-2521	Flange, AISI 304			
6-9612-40-2606	Seal ring, EPDM	-	20	2
6-9612-40-2616	Seal ring, Silicone Q			
6-9612-40-2626	Seal ring, Viton FPM			

Spare parts, LKB-F, NW 100, DIN				
Spare part Article No.	**Description**	**Included parts**	**Pos.**	**Qty.**
6-9611-92-3106	Service kit, EPDM	Bush Bush Seal ring Seal ring	16 17 18 20	1 1 1 2
6-9611-92-3115	Service kit, Silicone Q			
6-9611-92-3124	Service kit, FPM			
6-9612-40-2407	Valve body half, welding AISI 316L	-	14	2
6-9612-40-2422	Valve body half, welding AISI 304			
6-9612-07-4204	Disc, AISI 316L	-	15	1
6-9612-07-0601	Seal ring, EPDM	-	18	1
6-9612-07-1501	Seal ring, Silicone Q			
6-9612-07-2401	Seal ring, Viton FPM			
6-9612-40-0104	Set of screws and nut.	-	-	1
6-9612-40-2507	Flange, AISI 316L	-	19	2
6-9612-40-2522	Flange, AISI 304			
6-9612-40-2607	Seal ring, EPDM	-	20	2
6-9612-40-2617	Seal ring, Silicone Q			
6-9612-40-2627	Seal ring, Viton FPM			

1.0tf502633.en

Spare parts, LKB-F, NW 125, DIN				
Spare part Article No.	**Description**	**Included parts**	**Pos.**	**Qty.**
6-9611-92-3107	Service kit, EPDM	Bush Bush Seal ring Seal ring	16 17 18 20	1 1 1 2
6-9611-92-3116	Service kit, Silicone Q			
6-9611-92-3125	Service kit, FPM			
6-9612-40-2408	Valve body half, welding AISI 316L	-	14	2
6-9612-40-2423	Valve body half, welding AISI 304			
6-9612-07-6904	Disc, AISI 316L	-	15	1
6-9612-07-7101	Seal ring, EPDM	-	18	1
6-9612-07-8301	Seal ring, Silicone Q			
6-9612-07-8401	Seal ring, Viton FPM			
6-9612-40-0105	Set of screws and nut.	-	-	1
6-9612-40-2508	Flange, AISI 316L	-	19	2
6-9612-40-2523	Flange, AISI 304			
6-9612-40-2608	Seal ring, EPDM	-	20	2
6-9612-40-2618	Seal ring, Silicone Q			
6-9612-40-2628	Seal ring, Viton FPM			

Spare parts, LKB-F, NW 150, DIN				
Spare part Article No.	**Description**	**Included parts**	**Pos.**	**Qty.**
6-9611-92-3108	Service kit, EPDM	Bush Bush Seal ring Seal ring	16 17 18 20	1 1 1 2
6-9611-92-3117	Service kit, Silicone Q			
6-9611-92-3126	Service kit, FPM			
6-9612-40-2409	Valve body half, welding AISI 316L	-	14	2
6-9612-40-2424	Valve body half, welding AISI 304			
6-9611-41-3701	Disc, AISI 316L	-	15	1
6-9611-41-4150	Seal ring, EPDM	-	18	1
6-9611-41-3740	Seal ring, Silicone Q			
6-9611-41-4153	Seal ring, Viton FPM			
6-9612-40-0106	Set of screws and nut.	-	-	1
6-9612-40-2509	Flange, AISI 316L	-	19	2
6-9612-40-2524	Flange, AISI 304			
6-9612-40-2609	Seal ring, EPDM	-	20	2
6-9612-40-2619	Seal ring, Silicone Q			
6-9612-40-2629	Seal ring, Viton FPM			

1.0tf502633.en

Handles

Lockable multiposition handle

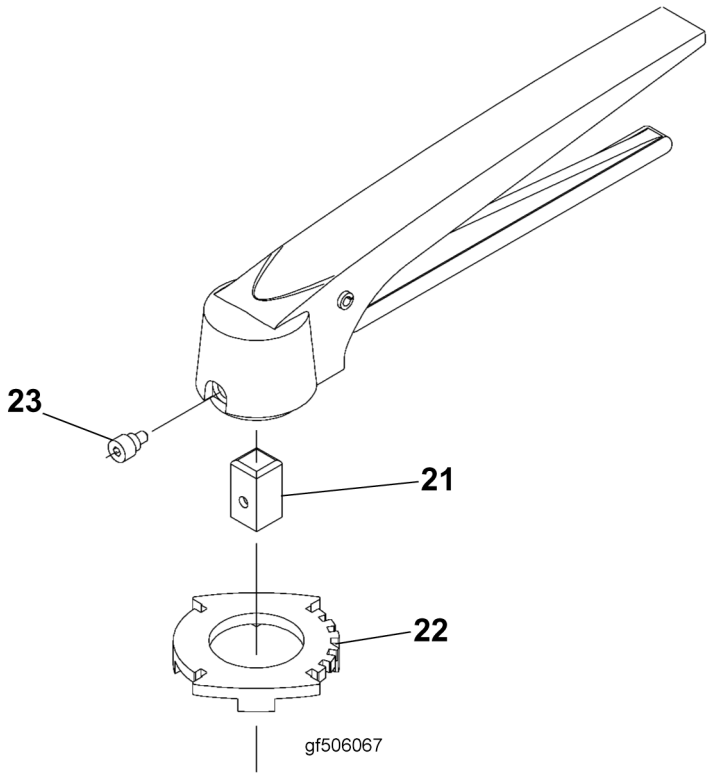

1.0tf502633.en

Spare parts, Lockable multiposition handles				
Spare part Article No.	**Description**	**Included parts**	**Pos.**	**Qty.**
6-9612-59-2801	Handle complete, 25-63,5mm /NW25-50	-	-	1
6-9612-59-2802	Handle complete, 76mm/ NW65-80			
6-9612-59-2803	Handle complete, 101,6mm/ NW100			
6-9612-58-8901	Insert, 25-63,5mm/NW25-50	-	21	1
6-9612-58-8902	Insert, 76mm/NW65-80			
6-9612-58-8701	Positioning cap, 25-63,5mm/ NW25-50	-	22	1
6-9612-58-8801	Positioning cap, 76-101,6mm /NW65-100			
6-9612-04-5302	Screw, 25-63,5mm/NW25-50	-	23	1
6-9612-04-5301	Screw, 76mm/NW65-80			
6-9612-04-5301	Screw, 101,6mm/NW100			

Handle 1.1

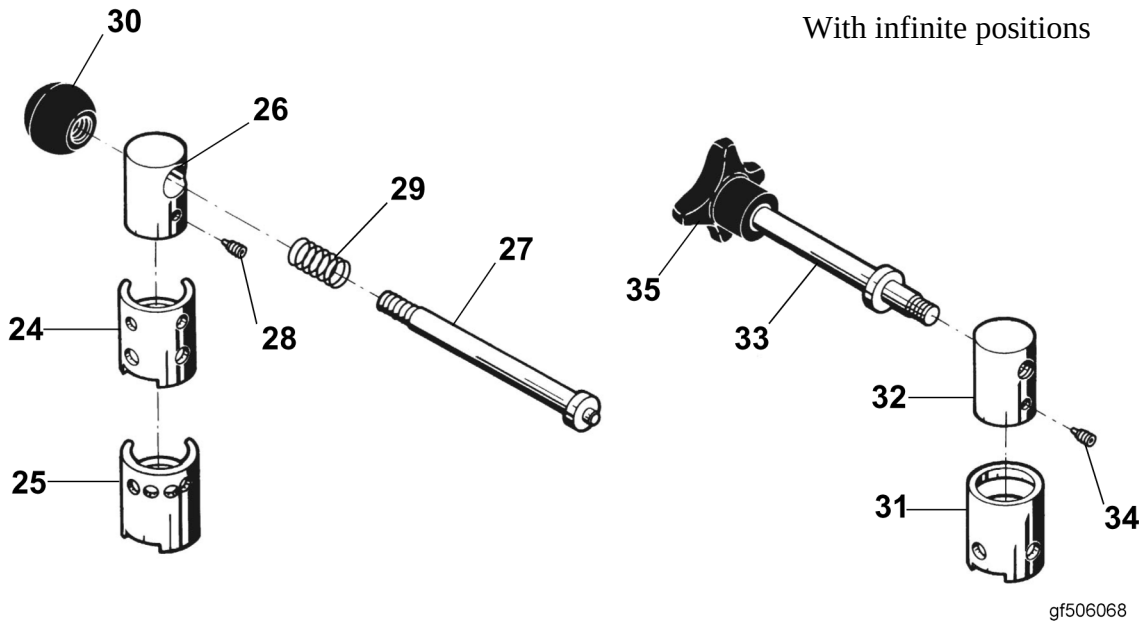

1.0tf502633.en

Spare parts, Handle 1.1, 25-63,5mm/NW 25-50				
Spare part Article No.	**Description**	**Included parts**	**Pos.**	**Qty.**
6-9612-04-5001	Handle complete, 2 pos	-	-	1
6-9612-04-5002	Handle complete, 4 pos			
6-9611-41-1380	Locking cap, 2 pos	-	24	1
6-9611-41-7390	Locking cap, 4 pos	-	25	1
6-9612-04-5401	Transfer block	-	26	1
6-9611-41-1400	Handle	-	27	1
6-9612-04-5201	Screw with pin	-	28	1
6-9611-99-1998	Spring	-	29	1
6-9611-99-1970	Ball	-	30	1

Spare parts, Handle 1.1, 76mm/NW 65-80				
Spare part Article No.	**Description**	**Included parts**	**Pos.**	**Qty.**
6-9612-04-5101	Handle complete, 2 pos	-	-	1
6-9612-04-5102	Handle complete, 4 pos			
6-9611-41-1430	Locking cap, 2 pos	-	24	1

Spare parts, Handle 1.1, 76mm/NW 65-80				
Spare part Article No.	**Description**	**Included parts**	**Pos.**	**Qty.**
6-9611-41-7400	Locking cap, 4 pos	-	25	1
6-9612-04-5501	Transfer block	-	26	1
6-9611-41-1401	Handle	-	27	1
6-9612-04-5301	Screw with pin	-	28	1
6-9611-99-1998	Spring	-	29	1
6-9611-99-1970	Ball	-	30	1

Spare parts, Handle 1.1, 101,6mm/NW 100				
Spare part Article No.	**Description**	**Included parts**	**Pos.**	**Qty.**
6-9612-04-5901	Handle complete, 2 pos	-	-	1
6-9612-04-5902	Handle complete, 4 pos			
6-9612-04-6401	Locking cap, 2 pos	-	24	1
6-9612-04-6501	Locking cap, 4 pos	-	25	1
6-9612-04-6201	Transfer block	-	26	1
6-9612-04-6101	Handle	-	27	1
6-9612-04-5301	Screw with pin	-	28	1
6-9611-99-1982	Spring	-	29	1
6-9611-99-1981	Ball	-	30	1

1.0tf502633.en

Spare parts, Handle 1.1, NW 125				
Spare part Article No.	**Description**	**Included parts**	**Pos.**	**Qty.**
6-9612-07-8201	Handle complete, 4 pos	-	-	1
6-9612-07-7701	Locking cap, 4 pos	-	25	1
6-9612-07-7801	Transfer block	-	26	1
6-9612-07-7901	Handle	-	27	1
6-9612-04-5301	Screw with pin	-	28	1
6-9612-07-8101	Spring	-	29	1
6-9611-99-2512	Ball	-	30	1

Spare parts, Handle 1.1, NW 150				
Spare part Article No.	**Description**	**Included parts**	**Pos.**	**Qty.**
6-9612-07-9101	Handle complete, 4 pos	-	-	1
6-9612-07-9201	Locking cap, 4 pos	-	25	1
6-9612-07-9301	Transfer block	-	26	1
6-9612-36-8501	Handle	-	27	1
6-9612-04-5301	Screw with pin	-	28	1

Spare parts, Handle 1.1, NW 150				
Spare part Article No.	**Description**	**Included parts**	**Pos.**	**Qty.**
6-9612-36-5101	Spring	-	29	1
6-9611-99-2713	Ball	-	30	1

Spare parts, Handle 1.1, 25-63,5mm/NW 25-50, with infinite positions				
Spare part Article No.	**Description**	**Included parts**	**Pos.**	**Qty.**
6-9612-04-7401	Handle complete	-	-	1
6-9612-04-7101	Locking cap	-	31	1
6-9612-04-7001	Transfer block	-	32	1
6-9612-04-7201	Handle	-	33	1
6-9612-04-5201	Screw with pin	-	34	1
6-9611-99-1995	Crosshead	-	35	1

Spare parts, Handle 1.1, 76mm/NW 65-80, with infinite positions				
Spare part Article No.	**Description**	**Included parts**	**Pos.**	**Qty.**
6-9612-04-7402	Handle complete	-	-	1
6-9612-04-7102	Locking cap	-	31	1
6-9612-04-7002	Transfer block	-	32	1
6-9612-04-7202	Handle	-	33	1
6-9612-04-5301	Screw with pin	-	34	1
6-9611-99-1996	Crosshead	-	35	1

1.0tf502633.en

Spare parts, Handle 1.1, 101,6mm/NW 100, with infinite positions				
Spare part Article No.	**Description**	**Included parts**	**Pos.**	**Qty.**
6-9612-04-7403	Handle complete	-	-	1
6-9612-04-7103	Locking cap	-	31	1
6-9612-04-7003	Transfer block	-	32	1
6-9612-04-7202	Handle	-	33	1
6-9612-04-5301	Screw with pin	-	34	1
6-9611-99-1996	Crosshead	-	35	1

Handle 1.1 for indication unit

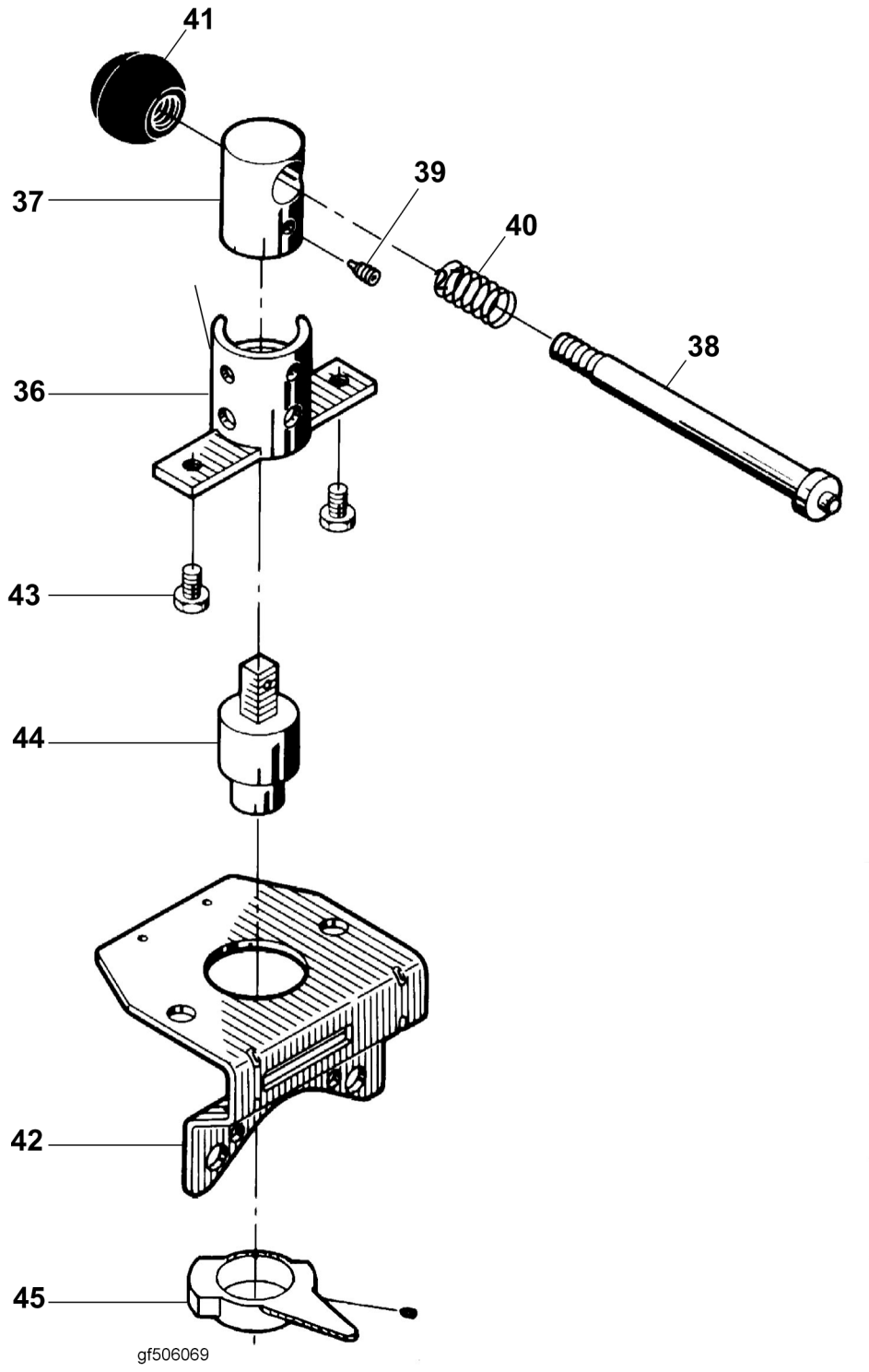

1.0tf502633.en

Spare parts, Handle 1.1 for indication unit, 25-63,5mm/NW 25				
Spare part Article No.	**Description**	**Included parts**	**Pos.**	**Qty.**
6-9612-04-7501	Handle complete	-	-	1
6-9611-41-7661	Locking cap	-	36	1

Spare parts, Handle 1.1 for indication unit, 25-63,5mm/NW 25				
Spare part Article No.	**Description**	**Included parts**	**Pos.**	**Qty.**
6-9612-04-5401	Transfer block	-	37	1
6-9611-41-1400	Handle	-	38	1
6-9612-04-5201	Screw with pin	-	39	1
6-9611-99-1998	Spring	-	40	1
6-9611-99-1970	Ball	-	41	1
6-9611-41-6471	Bracket	-	42	1
6-9611-99-1686	Screw	-	43	2
6-9611-41-7711	Coupling	-	44	1
6-9611-41-6690	Activating ring with screw	-	45	1

Spare parts, Handle 1.1 for indication unit, 76mm/NW 80				
Spare part Article No.	**Description**	**Included parts**	**Pos.**	**Qty.**
6-9612-04-7502	Handle complete	-	-	1
6-9611-41-7671	Locking cap	-	36	1
6-9612-04-5501	Transfer block	-	37	1
6-9611-41-1401	Handle	-	38	1
6-9612-04-5301	Screw with pin	-	39	1
6-9611-99-1998	Spring	-	40	1
6-9611-99-1970	Ball	-	41	1
6-9611-41-6481	Bracket	-	42	1
6-9611-99-1686	Screw	-	43	2
6-9611-41-7701	Coupling	-	44	1
6-9611-41-6690	Activating ring with screw	-	45	1

1.0tf502633.en

Spare parts, Handle 1.1 for indication unit, 101,6mm/NW 100				
Spare part Article No.	**Description**	**Included parts**	**Pos.**	**Qty.**
6-9612-04-7503	Handle complete	-	-	1
6-9612-04-6901	Locking cap	-	36	1
6-9612-04-6201	Transfer block	-	37	1
6-9612-04-6101	Handle	-	38	1
6-9612-04-5301	Screw with pin	-	39	1
6-9611-99-1982	Spring	-	40	1
6-9611-99-1981	Ball	-	41	1
6-9612-08-1501	Bracket	-	42	1
6-9611-99-1686	Screw	-	43	2
6-9612-04-6801	Coupling	-	44	1
6-9611-41-6690	Activating ring with screw	-	45	1

Spare parts, Handle 1.1 for indication unit, (LKB-DIN) NW 65				
Spare part Article No.	**Description**	**Included parts**	**Pos.**	**Qty.**
6-9612-04-7504	Handle complete	-	-	1
6-9611-41-7671	Locking cap	-	36	1
6-9612-04-5501	Transfer block	-	37	1
6-9611-41-1401	Handle	-	38	1
6-9612-04-5301	Screw with pin	-	39	1
6-9611-99-1998	Spring	-	40	1
6-9611-99-1970	Ball	-	41	1
6-9612-08-1501	Bracket	-	42	1
6-9611-99-1686	Screw	-	43	2
6-9611-41-7701	Coupling	-	44	1
6-9611-41-6690	Activating ring with screw	-	45	1

1.0tf502633.en

Actuators

Air/Spring Type - LKLA (NC-NO) Ø85

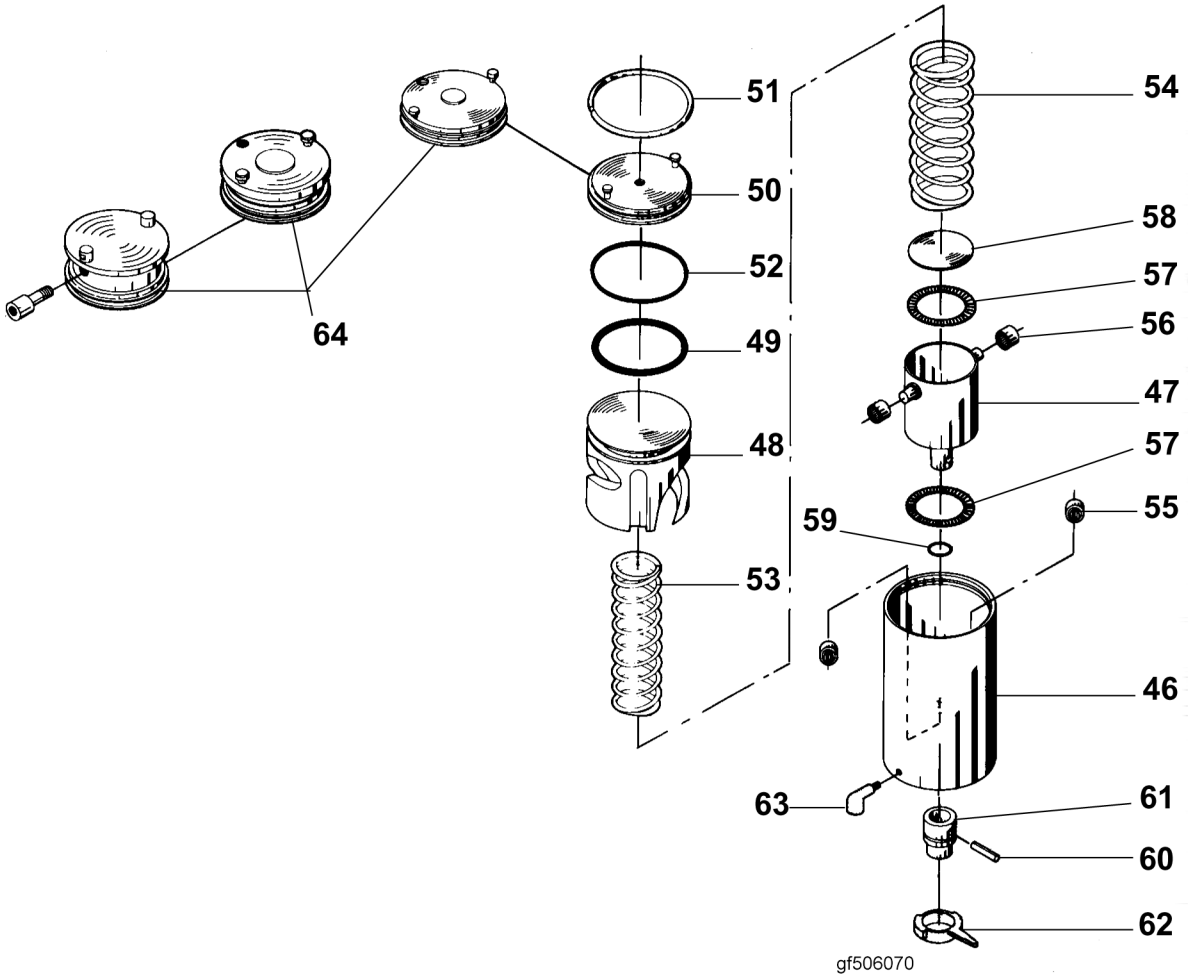

1.0tf502633.en

Spare parts, NC, NO, 25-101,6mm/NW25-100				
Spare part Article No.	**Description**	**Included parts**	**Pos.**	**Qty.**
6-9611-41-6301	Actuator, complete, NC 25-63,5mm/NW25-50	-	-	1
6-9611-41-6302	Actuator, complete NC 76mm/NW65-80			
6-9611-41-6306	Actuator, complete, NC 101,6mm/NW100			
6-9611-41-6304	Actuator, complete, NO 25-63,5mm/NW25-50			
6-9611-41-6305	Actuator, complete NO 76mm/NW65-80			
6-9611-41-6307	Actuator, complete, NO 101,6mm/NW100			

Spare parts, NC, NO, 25-101,6mm/NW25-100				
Spare part Article No.	**Description**	**Included parts**	**Pos.**	**Qty.**
6-9611-92-3010	Service kit	O-ring O-ring Needle bearing Needle bearing Thrust bearing O-ring	49 52 55 56 57 59	1 1 2 2 2 1
6-9611-41-7580	Air cylinder	-	46	1
6-9611-41-6380	Rotating cylinder	-	47	1
6-9611-41-6310	Piston, NC	-	48	1
6-9611-41-7410	Piston, NO	-	48	1
6-9611-99-0052	O-ring	-	49	1
6-3135-70-7401	End cap	-	50	1
6-9611-40-2021	Retaining ring	-	51	1
6-9611-99-0396	O-ring	-	52	1
6-9611-99-1629	Inner spring	-	53	1
6-9611-99-1631	Outer spring	-	54	1
6-9611-41-6460	Thrust plate	-	58	1
6-9611-99-1233	O-ring	-	59	1
6-9611-99-1235	Connex pin	-	60	1
6-9611-41-6440	Coupling, 25-63,5mm/ NW25-50	-	61	1
6-9611-41-6450	Coupling, 76mmm/NW65-80			
6-9612-04-4703	Coupling, 101,6mm/NW100			
6-9611-41-6690	Activating ring	-	62	1
6-9611-41-7750	Water rejector	-	63	1
NC/NO for AlTop				
6-9611-41-6781	Actuator, complete, NC 25-63,5mm/NW25-50	-	-	1
6-9611-41-6782	Actuator, complete NC 76mm/NW65-80			
6-9611-41-6786	Actuator, complete, NC 101,6mm/NW100			
6-9611-41-6784	Actuator, complete, NO 25-63,5mm/NW25-50			
6-9611-41-6785	Actuator, complete NO 76mm/NW65-80			
6-9611-41-6787	Actuator, complete, NO 101,6mm/NW100			
6-9611-41-6740	End cap	-	64	1

1.0tf502633.en

Air/Air Type - LKLA Ø85

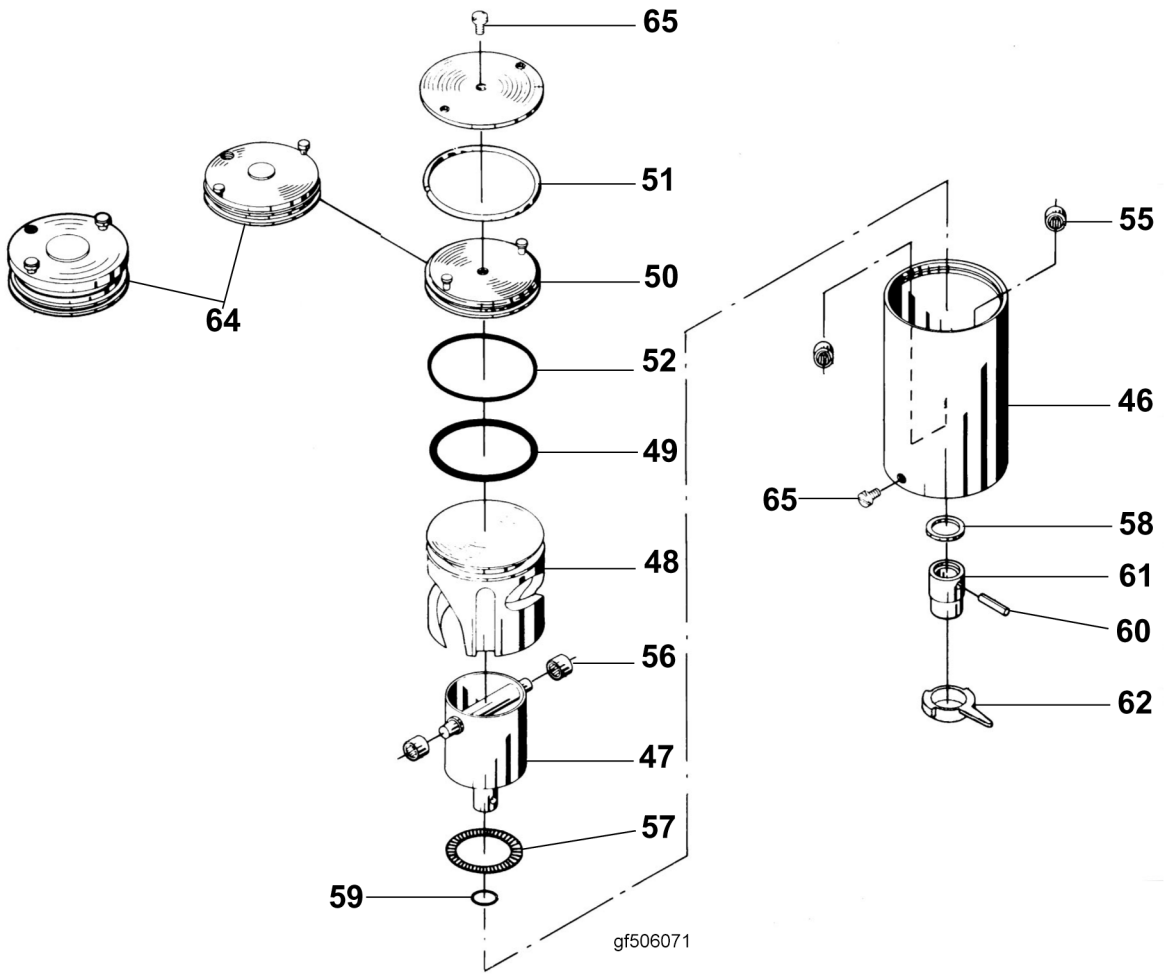

1.0tf502633.en

Spare parts, 25-101,6mm/NW25-100				
Spare part Article No.	**Description**	**Included parts**	**Pos.**	**Qty.**
6-9611-41-7491	Actuator, complete, 25-63,5mm/NW25-50	-	-	1
6-9611-41-7492	Actuator, complete, 76mm/ NW65-80			
6-9611-41-7493	Actuator, complete, 101,6mm/NW100			
6-9611-92-3011	Service kit	O-ring O-ring Needle bearing Needle bearing Thrust bearing O-ring	49 52 55 56 57 59	1 1 2 2 1 1
6-9611-41-7580	Air cylinder	-	46	1
6-9611-41-7441	Rotating cylinder	-	47	1
6-9611-41-7520	Piston	-	48	1

Spare parts, 25-101,6mm/NW25-100				
Spare part Article No.	**Description**	**Included parts**	**Pos.**	**Qty.**
6-9611-99-0052	O-ring	-	49	1
6-3135-70-7401	End cap	-	50	1
6-9611-40-2021	Retaining ring	-	51	1
6-9611-99-0396	O-ring	-	52	1
6-9611-41-7570	Thrust plate	-	58	1
6-9611-99-1233	O-ring	-	59	1
6-9611-99-1235	Connex pin	-	60	1
6-9611-41-7551	Coupling, 25-63,5mm/ NW25-50	-	61	1
6-9611-41-7561	Coupling, 76mmm/NW65-80			
6-9612-04-4802	Coupling, 101,6mm/NW100			
6-9611-41-6690	Activating ring	-	62	1
6-9611-99-1221	Threaded plug	-	65	2
Air/Air for AlTop				
6-9612-08-122	Actuator, complete, 25-63,5mm/NW25-50	-	-	1
6-9612-08-123	Actuator, complete 76mm/ NW65-80			
6-9612-08-124	Actuator, complete, 101,6mm/NW100			
6-9611-41-6740	End cap, Mask III	-	64	1
6-9611-41-8581	End cap, Mask II W fixation screw			

1.0tf502633.en

Air/Air Type - LKLA NW125-150 Ø85

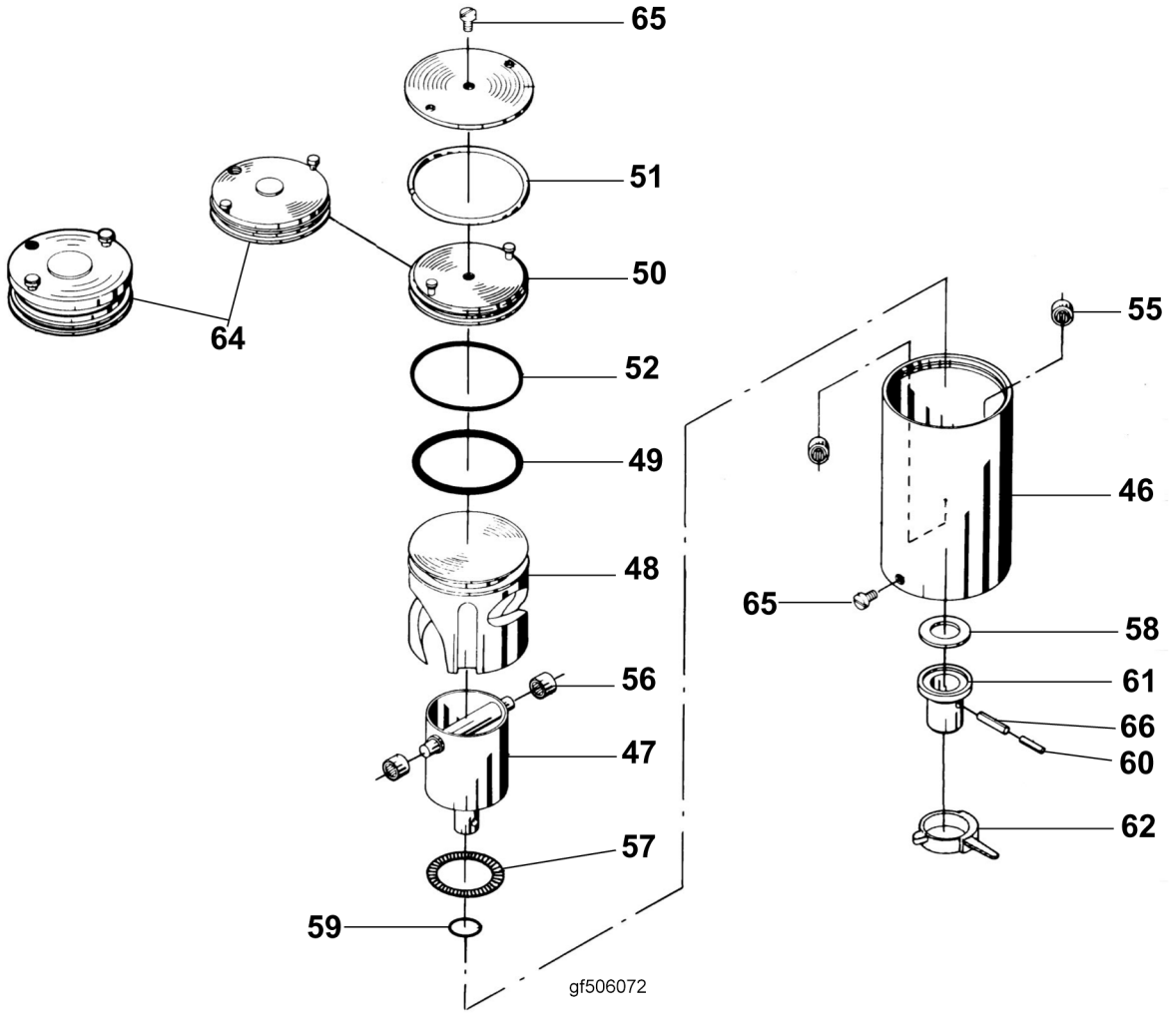

1.0tf502633.en

Spare parts, NW125-150				
Spare part Article No.	**Description**	**Included parts**	**Pos.**	**Qty.**
6-9611-41-7502	Actuator, complete, NW125	-	-	1
6-9611-41-7500	Actuator, complete, NW150			
6-9611-92-3012	Service kit	O-ring O-ring Needle bearing Needle bearing Thrust bearing O-ring	49 52 55 56 57 59	1 1 2 2 1 1
6-9611-41-7420	Air cylinder	-	46	1
6-9611-41-7440	Rotating cylinder	-	47	1
6-9611-41-7520	Piston	-	48	1
6-9611-99-0052	O-ring	-	49	1
6-3135-70-7401	End cap	-	50	1
6-9611-40-2021	Retaining ring	-	51	1

Spare parts, NW125-150				
Spare part Article No.	**Description**	**Included parts**	**Pos.**	**Qty.**
6-9611-99-0396	O-ring	-	52	1
6-9611-99-1314	Connex pin	-	66	1
6-9611-41-7540	Thrust plate	-	58	1
6-9611-99-0030	O-ring	-	59	1
6-9611-99-1313	Connex pin	-	60	1
6-9612-28-5602	Coupling, NW125	-	61	1
6-9611-41-7471	Coupling, NW150			
6-9611-41-6650	Activating ring	-	62	1
6-9611-99-1221	Threaded plug	-	65	2
Air/Air for AlTop				
6-9612-08-1302	Actuator, complete, NW125	-	-	1
6-9612-08-1301	Actuator, complete, NW150			
6-9611-41-6740	End cap, Mask III	-	64	1
6-9611-41-8581	End cap, Mask II W fixation screw			

1.0tf502633.en

Air/Spring Type - LKLA (NC-NO) Ø133

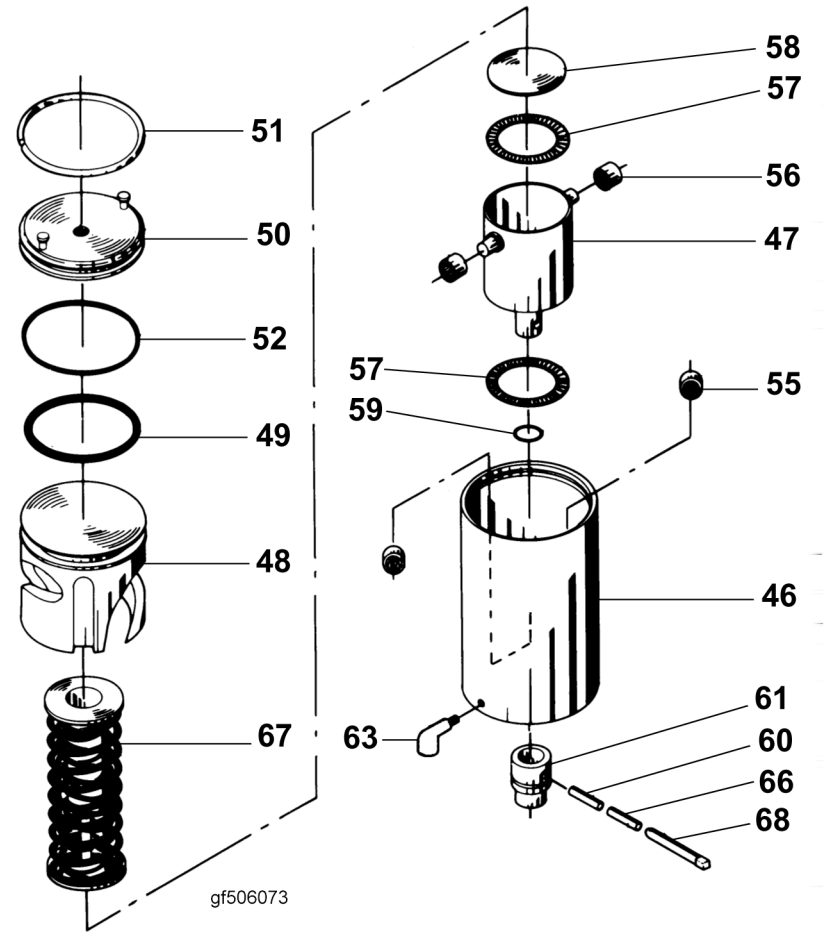

1.0tf502633.en

Spare parts, NC, NO, 101,6mm/NW100-NW150				
Spare part Article No.	**Description**	**Included parts**	**Pos.**	**Qty.**
6-9612-27-1306	Actuator, complete, NC 101,6mm/NW100	-	-	1
6-9612-27-1311	Actuator, complete, NC NW125			
6-9612-27-1316	Actuator, complete, NC NW150			
6-9612-27-1307	Actuator, complete, NO 101,6mm/NW100			
6-9612-27-1312	Actuator, complete, NO NW125			
6-9612-27-1317	Actuator, complete, NO NW150			

Spare parts, NC, NO, 101,6mm/NW100-NW150				
Spare part Article No.	**Description**	**Included parts**	**Pos.**	**Qty.**
6-9611-92-3020	Service kit	O-ring O-ring Needle bearing Needle bearing Thrust bearing O-ring	49 52 55 56 57 59	1 1 2 2 2 1
6-9612-26-8501	Air cylinder	-	46	1
6-9612-26-7801	Rotating cylinder	-	47	1
6-9612-27-0001	Piston, NC	-	48	1
6-9612-26-8001	Piston, NO			
6-9611-99-2367	O-ring	-	49	1
6-9612-27-1401	End cap	-	50	1
6-9612-26-8201	Retaining ring	-	51	1
6-9611-99-0035	O-ring	-	52	1
6-9612-27-0101	Spring assembly	-	67	1
6-9611-99-2357	Connex pin	-	66	1
6-9612-26-7101	Thrust plate	-	58	1
6-9611-99-0079	O-ring	-	59	1
6-9611-99-2358	Connex pin	-	60	1
6-9612-27-1501	Coupling, 101,6mm/NW100	-	61	1
6-9612-27-1502	Coupling, NW125			
6-9612-27-1503	Coupling, NW150			
6-9612-27-1901	Indication pin	-	68	1
6-9611-41-7750	Waret rejector	-	63	1

1.0tf502633.en

Air/Air Type - LKLA Ø133

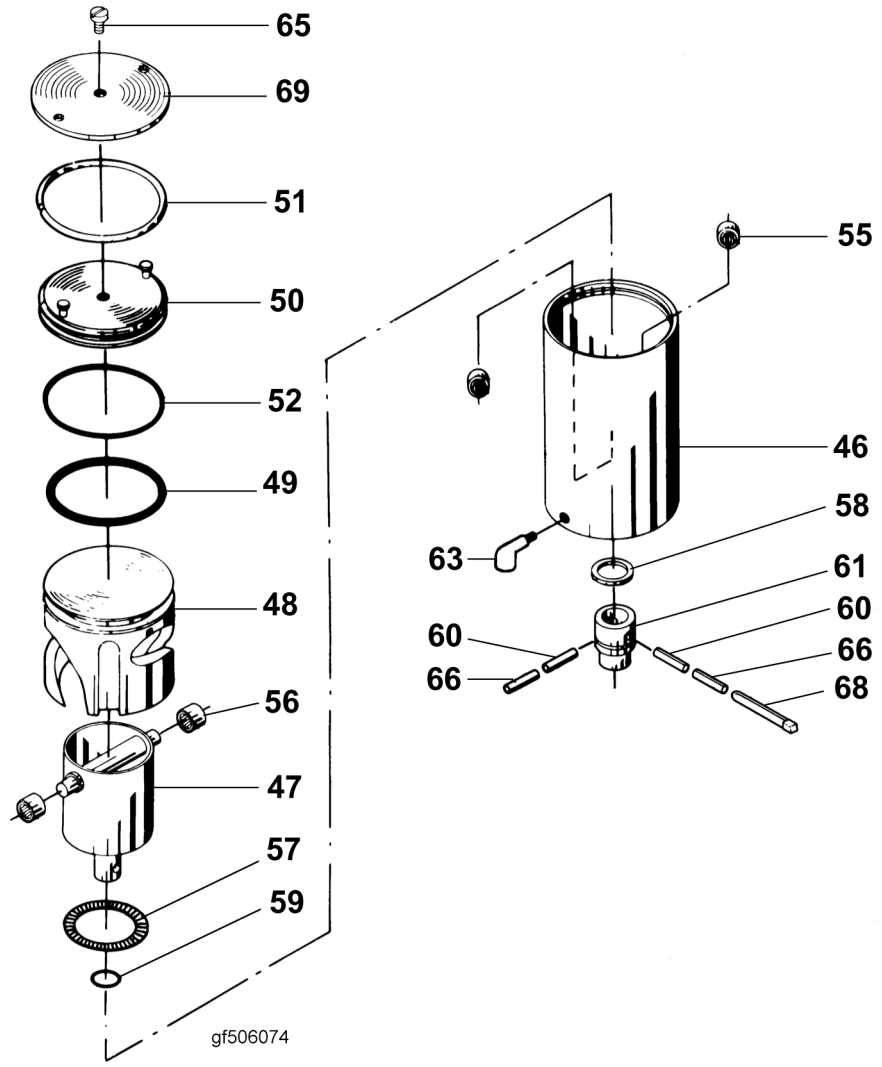

1.0tf502633.en

Spare parts, 101,6mm/NW100-150				
Spare part Article No.	**Description**	**Included parts**	**Pos.**	**Qty.**
6-9612-27-1308	Actuator, complete, 101,6mm/NW100	-	-	1
6-9612-27-1313	Actuator, complete, NW125			
6-9612-27-1318	Actuator, complete, NW150			
6-9611-92-3022	Service kit	O-ring O-ring Needle bearing Needle bearing Thrust bearing O-ring	49 52 55 56 57 59	1 1 2 2 1 1
6-9612-26-8501	Air cylinder	-	46	1
6-9612-26-7801	Rotating cylinder	-	47	1
6-9612-26-8001	Piston	-	48	1

Spare parts, 101,6mm/NW100-150				
Spare part Article No.	**Description**	**Included parts**	**Pos.**	**Qty.**
6-9611-99-2367	O-ring	-	49	1
6-9612-27-1401	End cap	-	50	1
6-9612-26-8201	Retaining ring	-	51	1
6-9611-99-0035	O-ring	-	52	1
6-9611-99-2358	Connex pin	-	66	2
6-9612-28-0401	Thrust plate	-	58	1
6-9611-99-0079	O-ring	-	59	1
6-9611-99-2357	Connex pin	-	60	2
6-9612-28-2701	Coupling, 101,6mm/NW100	-	61	1
6-9612-28-2702	Coupling, NW125			
6-9612-28-2703	Coupling, NW150			
6-9612-27-1901	Indication pin	-	68	1
6-9611-41-7750	Waret rejector	-	63	1
6-9612-34-8601	Retaining Plate	-	69	1
6-9611-99-1221	Threaded plug	-	65	1

1.0tf502633.en

Air/Spring Type - LKLA-T (NO-NC) Ø85

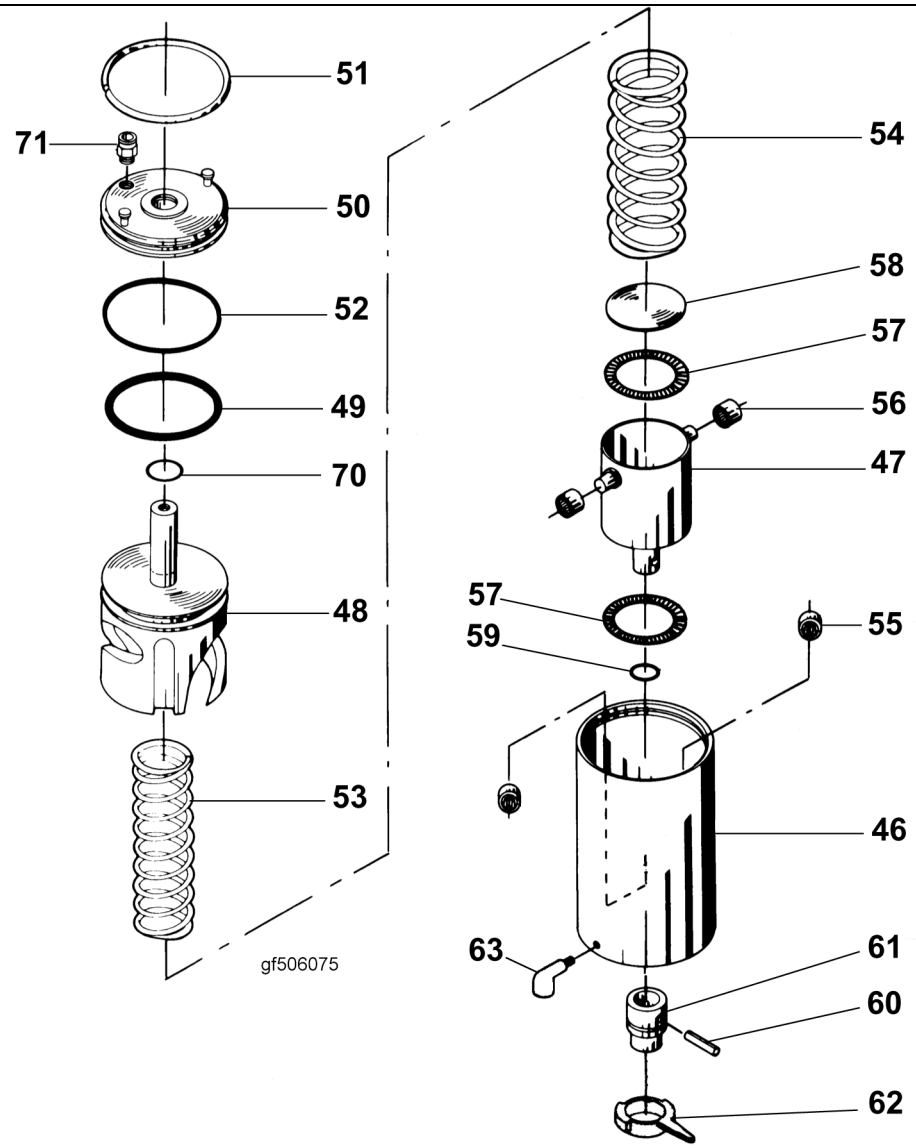

1.0tf502633.en

Spare parts, 25-101,6mm/NW25-100				
Spare part Article No.	**Description**	**Included parts**	**Pos.**	**Qty.**
6-9612-19-4002	Actuator, complete, NC, 25-63,5mm/NW25-50	-	-	1
6-9612-19-4003	Actuator, complete, NC, 76mm/NW65-80			
6-9612-19-4007	Actuator, complete, NC, 101,6mm/NW100			
6-9612-19-4005	Actuator, complete, NO, 25-63,5mm/NW25-50			
6-9612-19-4006	Actuator, complete, NO, 76mm/NW65-80			
6-9612-19-4008	Actuator, complete, NO, 101,6mm/NW100			

Spare parts, 25-101,6mm/NW25-100				
Spare part Article No.	**Description**	**Included parts**	**Pos.**	**Qty.**
6-9611-92-3021	Service kit	O-ring O-ring Needle bearing Needle bearing Thrust bearing O-ring O-ring	49 52 55 56 57 59 70	1 1 2 2 2 1 1
6-9611-41-7580	Air cylinder	-	46	1
6-9611-41-6380	Rotating cylinder	-	47	1
6-9612-19-3902	Piston, NC	-	48	1
6-9612-19-3901	Piston, NO			
6-9611-99-0052	O-ring	-	49	1
6-9612-19-3601	End cap	-	50	1
6-9611-40-2021	Retaining ring	-	51	1
6-9611-99-0396	O-ring	-	52	1
6-9611-99-1629	Inner spring	-	53	1
6-9611-99-1631	Outer spring	-	54	1
6-9611-41-6460	Thrust plate	-	58	1
6-9611-99-1233	O-ring	-	59	1
6-9611-99-1235	Connex pin	-	60	1
6-9611-41-6440	Coupling, 25-63,5mm/ NW25-50	-	61	1
6-9611-41-6450	Coupling, 76mm/NW65-80			
6-9612-04-4703	Coupling, 101,6mm/NW100			
6-9611-41-6690	Activating ring	-	62	1
6-9611-41-7750	Waret rejector	-	63	1
6-0022-34-0421	O-ring	-	70	1
6-9611-99-2323	Air fitting	-	71	1

1.0tf502633.en

Air/Air Type - LKLA-T Ø85

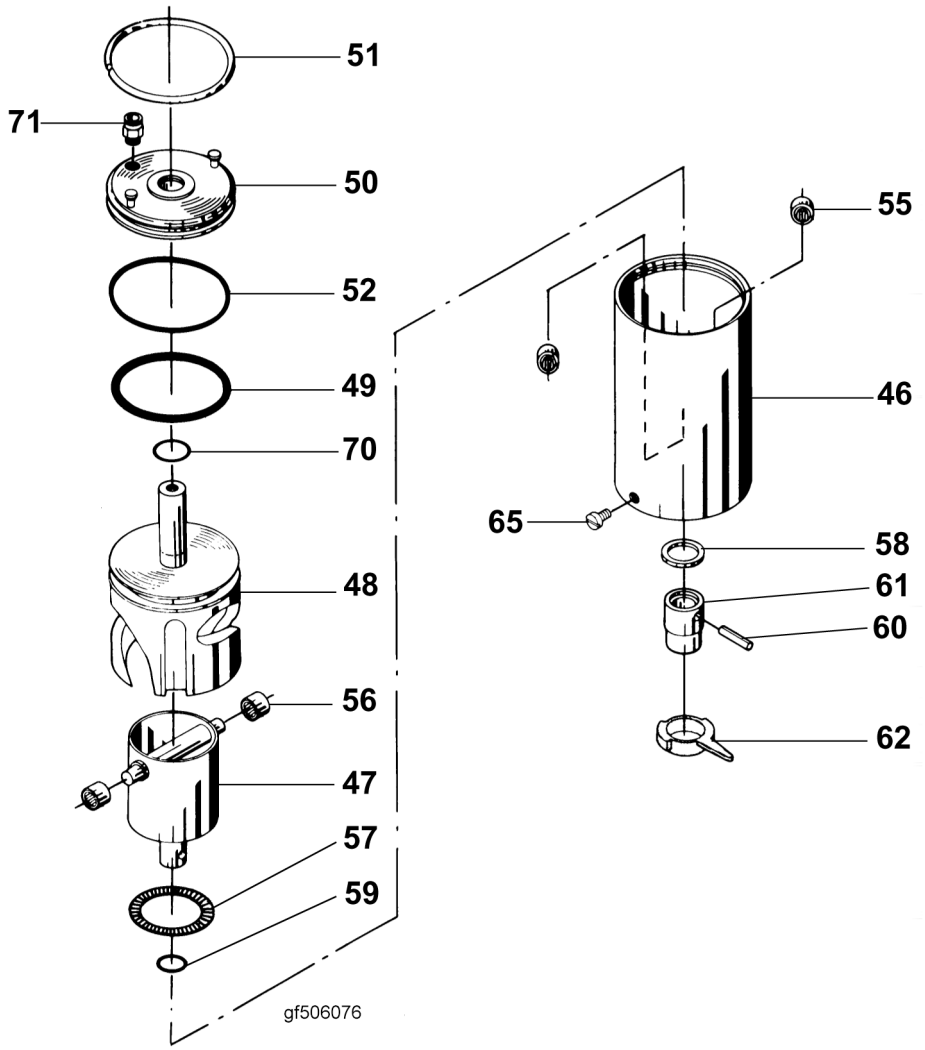

1.0tf502633.en

Spare parts, 25-101,6mm/NW25-100				
Spare part Article No.	**Description**	**Included parts**	**Pos.**	**Qty.**
6-9612-19-4102	Actuator, complete, 25-63,5mm/NW25-50	-	-	1
6-9612-19-4103	Actuator, complete, 76mm/NW65-80			
6-9612-19-4104	Actuator, complete, 101,6mm/NW100			
6-9611-92-3023	Service kit	O-ring O-ring Needle bearing Needle bearing Thrust bearing O-ring O-ring	49 52 55 56 57 59 70	1 1 2 2 1 1 1
6-9611-41-7580	Air cylinder	-	46	1

Spare parts, 25-101,6mm/NW25-100				
Spare part Article No.	**Description**	**Included parts**	**Pos.**	**Qty.**
6-9611-41-7441	Rotating cylinder	-	47	1
6-9612-19-3903	Piston	-	48	1
6-9611-99-0052	O-ring	-	49	1
6-9612-19-3601	End cap	-	50	1
6-9611-40-2021	Retaining ring	-	51	1
6-9611-99-0396	O-ring	-	52	1
6-9611-41-7570	Thrust plate	-	58	1
6-9611-99-1233	O-ring	-	59	1
6-9611-99-1235	Connex pin	-	60	1
6-9611-41-7551	Coupling, 25-63,5mm/ NW25-50	-	61	1
6-9611-41-7561	Coupling, 76mm/NW65-80			
6-9612-04-4802	Coupling, 101,6mm/NW100			
6-9611-41-6690	Activating ring	-	62	1
6-0022-34-0421	O-ring	-	70	1
6-9611-99-2323	Air fitting	-	71	1
6-9611-99-1221	Threaded plug	-	65	1

1.0tf502633.en

Air/Air Type - LKLA-T NW125-150 Ø85

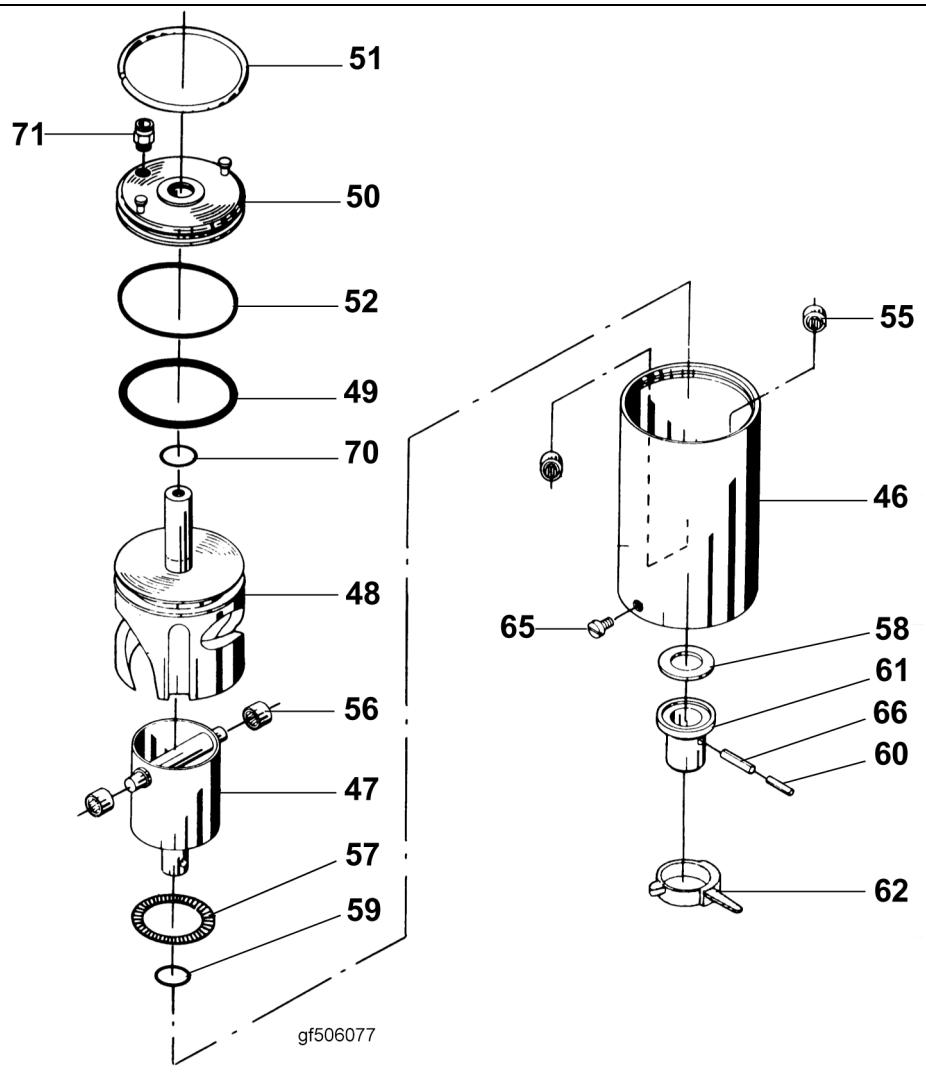

1.0tf502633.en

Spare parts, 25-101,6mm/NW25-100				
Spare part Article No.	**Description**	**Included parts**	**Pos.**	**Qty.**
6-9612-19-4102	Actuator, complete, NW 125	-	-	1
6-9612-19-4103	Actuator, complete, NW 150			
6-9611-92-3024	Service kit	O-ring O-ring Needle bearing Needle bearing Thrust bearing O-ring O-ring	49 52 55 56 57 59 70	1 1 2 2 1 1 1
6-9611-41-7420	Air cylinder	-	46	1
6-9611-41-7440	Rotating cylinder	-	47	1
6-9612-19-3903	Piston	-	48	1
6-9611-99-0052	O-ring	-	49	1
6-9612-19-3601	End cap	-	50	1

Spare parts, 25-101,6mm/NW25-100				
Spare part Article No.	**Description**	**Included parts**	**Pos.**	**Qty.**
6-9611-40-2021	Retaining ring	-	51	1
6-9611-99-0396	O-ring	-	52	1
6-9611-99-1314	Connex pin	-	66	1
6-9611-41-7540	Thrust plate	-	58	1
6-9611-99-0030	O-ring	-	59	1
6-9611-99-1313	Connex pin	-	60	1
6-9612-28-5602	Coupling, NW 125	-	61	1
6-9611-41-7471	Coupling, NW 150			
6-9611-41-6650	Activating ring	-	62	1
6-0022-34-0421	O-ring	-	70	1
6-9611-99-2323	Air fitting	-	71	1
6-9611-99-1221	Threaded plug	-	65	1

1.0tf502633.en

Air/Spring Type - LKLA-T (NC-NO) Ø133

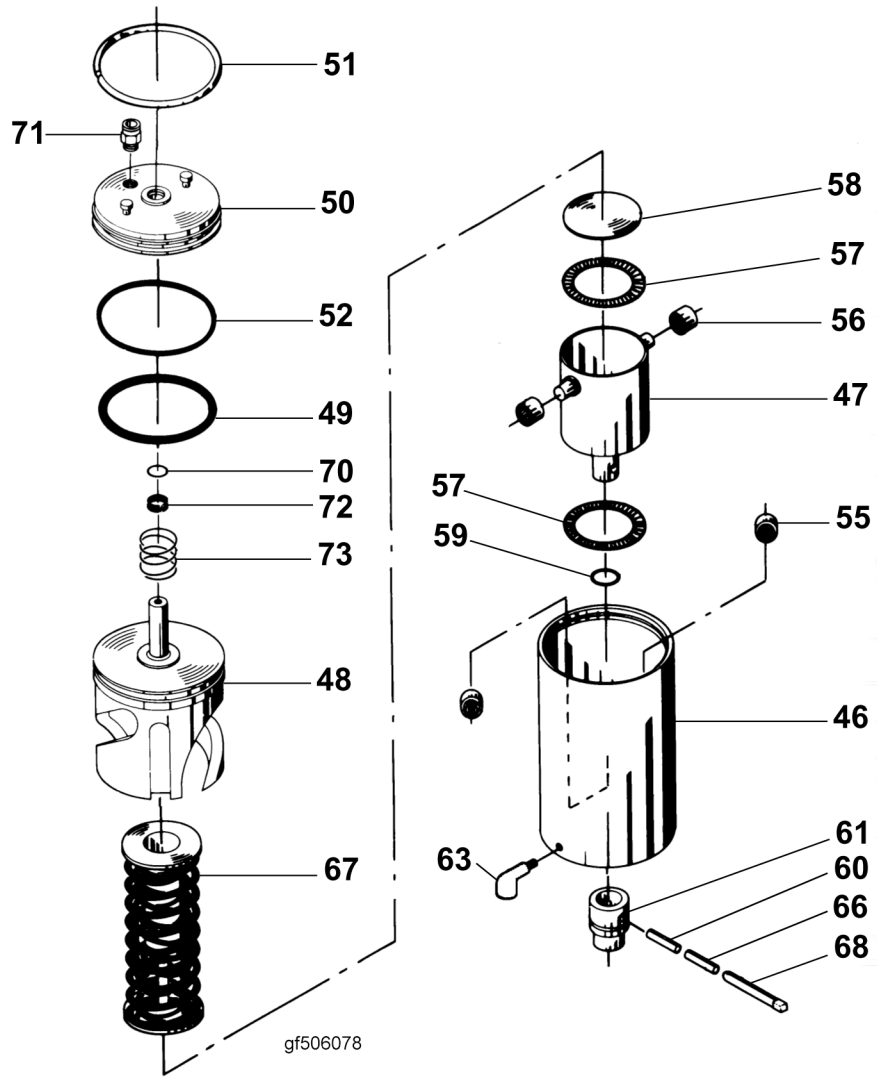

1.0tf502633.en

Spare parts,101,6mm/NW100-150				
Spare part Article No.	**Description**	**Included parts**	**Pos.**	**Qty.**
6-9612-37-4906	Actuator, complete, NC, 101,6mm/NW100	-	-	1
6-9612-37-4911	Actuator, complete, NC, NW125			
6-9612-37-4916	Actuator, complete, NC, NW150			
6-9612-37-4907	Actuator, complete, NO, 101,6mm/NW100			
6-9612-37-4912	Actuator, complete, NO, NW125			
6-9612-37-4917	Actuator, complete, NO, NW150			

Spare parts,101,6mm/NW100-150				
Spare part Article No.	**Description**	**Included parts**	**Pos.**	**Qty.**
6-9611-92-3056	Service kit	O-ring O-ring Needle bearing Needle bearing Thrust bearing O-ring O-ring Guiding ring	49 52 55 56 57 59 70 72	1 1 2 2 2 1 1 1
6-9612-26-8501	Air cylinder	-	46	1
6-9612-26-7801	Rotating cylinder	-	47	1
6-9612-36-9901	Piston	-	48	1
6-9611-99-2367	O-ring	-	49	1
6-9612-27-1402	End cap	-	50	1
6-9612-26-8201	Retaining ring	-	51	1
6-9611-99-0035	O-ring	-	52	1
6-9612-27-0101	Spring assembly	-	67	1
6-9611-99-2357	Connex pin	-	66	1
6-9612-26-7101	Thrust plate	-	58	1
6-9611-99-0079	O-ring	-	59	1
6-9611-99-2358	Connex pin	-	60	1
6-9612-27-1501	Coupling, 101,6mm/NW100	-	61	1
6-9612-27-1502	Coupling, NW 125			
6-9612-27-1503	Coupling, NW 150			
6-9612-27-1901	Indication pin	-	68	1
6-9611-41-7750	Water rejetor	-	63	1
6-0022-34-0421	O-ring	-	70	1
6-9611-99-2323	Air fitting	-	71	1
6-9612-36-9801	Guiding ring	-	72	1
6-9612-37-0001	Spring	-	73	1

1.0tf502633.en

Air/Air Type - LKLA-T Ø133

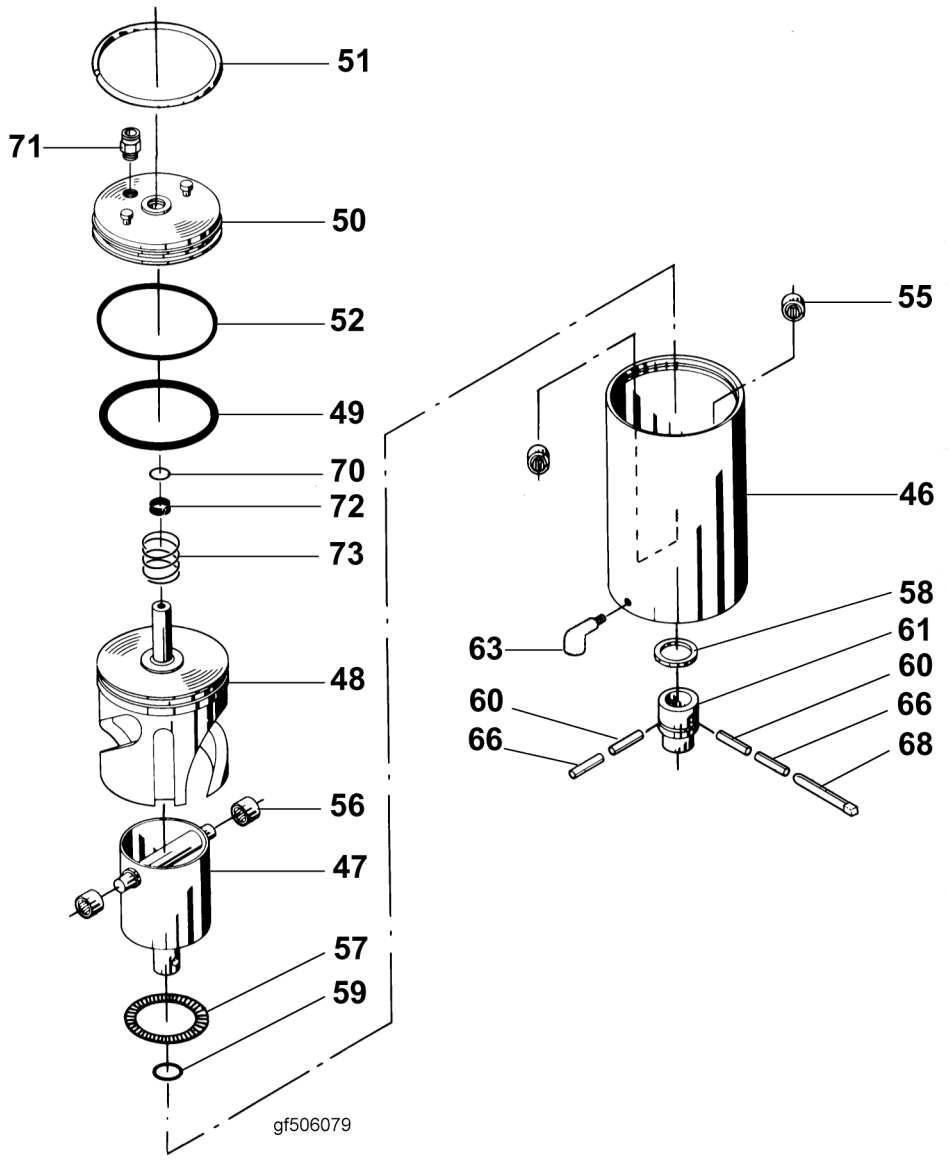

1.0tf502633.en

Spare parts,101,6mm/NW100-150				
Spare part Article No.	**Description**	**Included parts**	**Pos.**	**Qty.**
6-9612-37-4908	Actuator, complete, 101,6mm/NW100	-	-	1
6-9612-37-4913	Actuator, complete, NW125			
6-9612-37-4918	Actuator, complete, NW150			
6-9611-92-3057	Service kit	O-ring O-ring Needle bearing Needle bearing Thrust bearing O-ring O-ring Guiding ring	49 52 55 56 57 59 70 72	1 1 2 2 1 1 1 1

Spare parts,101,6mm/NW100-150				
Spare part Article No.	**Description**	**Included parts**	**Pos.**	**Qty.**
6-9612-26-8501	Air cylinder	-	46	1
6-9612-26-7801	Rotating cylinder	-	47	1
6-9612-36-9901	Piston	-	48	1
6-9611-99-2367	O-ring	-	49	1
6-9612-27-1402	End cap	-	50	1
6-9612-26-8201	Retaining ring	-	51	1
6-9611-99-0035	O-ring	-	52	1
6-9611-99-2358	Connex pin	-	66	2
6-9612-28-0401	Thrust plate	-	58	1
6-9611-99-0079	O-ring	-	59	1
6-9611-99-2357	Connex pin	-	60	2
6-9612-28-2701	Coupling, 101,6mm/NW100	-	61	1
6-9612-28-2702	Coupling, NW 125			
6-9612-28-2703	Coupling, NW 150			
6-9612-27-1901	Indication pin	-	68	1
6-9611-41-7750	Water rejetor	-	63	1
6-0022-34-0421	O-ring	-	70	1
6-9611-99-2323	Air fitting	-	71	1
6-9612-36-9801	Guiding ring	-	72	1
6-9612-37-0001	Spring	-	73	1

1.0tf502633.en

Tetra Pak

Maintenance & Spare Parts

Non-return valve

(Gestra)

RK86/RK86A



1.0 1216355-0101.fro

Tetra Pak

Doc No. 1216355-0101

Non-return valve

RK86/RK86A

Article No.	Type	Connection	Seat
6-31801-9721-1	RK 86A	DN 40	Viton covered disc / Soft seat
6-31801-9721-2	RK 86A	DN 50	Viton covered disc / Soft seat
6-31801-9721-3	RK 86A	DN 65	Viton covered disc / Soft seat
6-31801-9721-4	RK 86A	DN 80	Viton covered disc / Soft seat
6-31801-9721-5	RK 86A	DN 100	Viton covered disc / Soft seat
6-31801-9722-1	RK 86A	DN 40	Metal / Metal seat
6-31801-9722-2	RK 86A	DN 50	Metal / Metal seat
6-31801-9722-3	RK 86A	DN 65	Metal / Metal seat
6-31801-9722-4	RK 86A	DN 80	Metal / Metal seat
6-31801-9722-5	RK 86A	DN 100	Metal / Metal seat
90511-5985	RK 86A	DN 25	Metal / Metal seat

1.0 1216355-0101.fro

Version 02 Issue 2009-07

Doc No. 1216355-0101

Tetra Pak

Tetra Pak Processing Systems AB

Maintenance 1

Description 1

Check. 2

Change. 2

Spare Parts 3

Not applicable for this component! 3

1.0 1216355-0101.TOC

This page intentionally left blank

Maintenance

Description

Non-return valve with spring loaded disc for use in non pulsating flow. The non-return valve opens when the pressure in the flow direction overcomes the back pressure and the spring pressure. At an equal or higher counter pressure, the counter pressure and the spring pressure will press the disc against the seat and close the valve.

The valve shall be installed with flange connections.

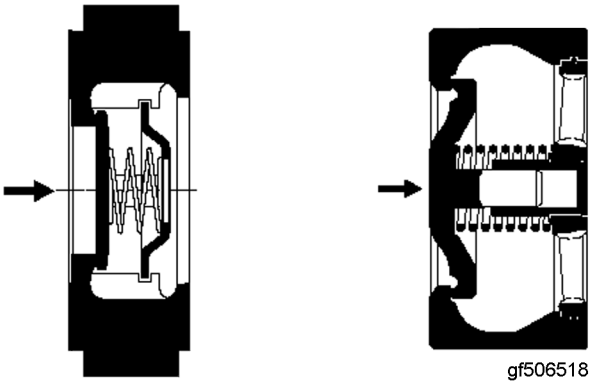

2.2tf502777.en

Check

WARNING! **Risk of injury!**
Make sure before dismantling, that the pipeline is drained and free from media.

a) Disassemble the flange coupling to expose the non-return valve.
b) Visually inspect the conditions of the seat and disc. Change the whole unit if worn.
c) When assembling, replace the old flange gaskets with new ones.

Change

WARNING! **Risk of injury!**
Make sure before dismantling, that the pipeline is drained and free from media.

a) Disassemble the flange coupling.
b) Change the non-return valve.
c) When assembling, replace the old flange gaskets with new ones.


gf506518

2.2tf502777.en

Spare Parts

Not applicable for this component!

2.2TF000880.en

Tetra Pak

Maintenance & Spare Parts

On/off valve

(Bürkert)

2000 / 2002 / 2012



2000 2002 2012

2.21218030-0101.fro

Tetra Pak

Doc No. 1218030-0101

On/off valve

2000 / 2002 / 2012

This document refers to components specified in Technical Manual, on Maintenance & Spare Parts CD/DVD or on Tetra Pak Intranet.

2.21218030-0101.fro

Version 05 Issue 2016-02

Doc No. 1218030-0101

Tetra Pak

Tetra Pak Processing Systems AB

Table of contents

Maintenance 1

General 1

Change Valve kit 2

Change Seal Kit. 6

Spare parts 14

On/off-valve 2000 (2/2-way). 14

On/off-valve 2002 (3-way) 16

On/off-valve 2012 ≤ DN65 17

On/off-valve 2012 ≥ DN65 19

Actuator 2000 20

1.0 1218030-0101.TOC

This page intentionally left blank

Maintenance

General

Three different valves are covered in this document, 2000, 2002 and 2012. All three use the 2000 actuator.

2002 is available in both 2/2-way valve configuration and 3/2 valve configuration.

2012 is available in two different types, one for dimension up to or equal with DN65 and one for dimension DN65 and upwards with actuator 175 or 225 mm.

Each valve has also one of three Control Functions, CFA (normaly closed), CFB (normaly open) and CFI (double-acting actuator). See below.

1060 is a single electrical feedback signaller that can be combined with all three valves.

1062 is a double electrical position feedback that can be combined with all three valves.

8801 is a 20xx-valve that is equipped with one of these accessories.

2.2TF503474.en

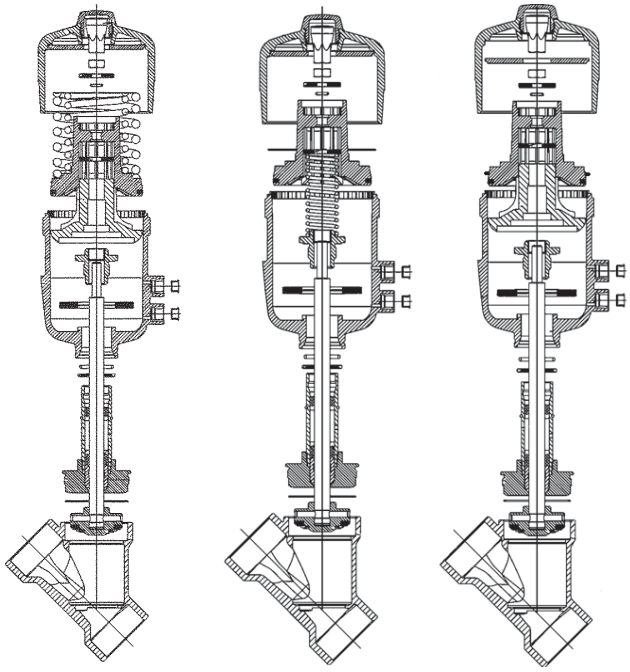

CFA CFB CFI

Change Valve kit

WARNING!

Risk of injury!
Make sure before dismantling, that the pipeline is drained and free from media

2000, 2002 (2/2 valve), 2012 DN≤65

a) Hold valve on body (1).
   – **CFA only:** Unfasten cover (31) with special key until springs are completely released, while counter holding on hex nut of the actuator housing (12).

b) Unscrew actuator on the nipple (6) from valve body (1).

c) Insert articulate plug (3) into V-block and punch out the seal pin (4).

d) Remove articulate plug (3).

e) Put on new articulate plug (3) align and lock with new seal pin (4).

f) Permanently press bolt bore holes into the articulate plug to both sides with chisel or centre punch.

Type 2000 and 2002 (2/2 valve)

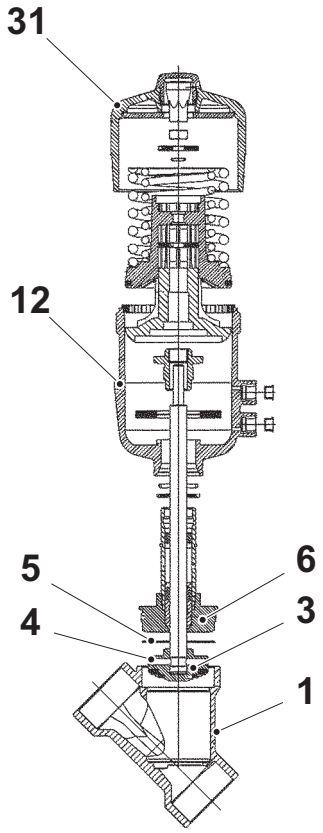

Type 2012 DN≤65

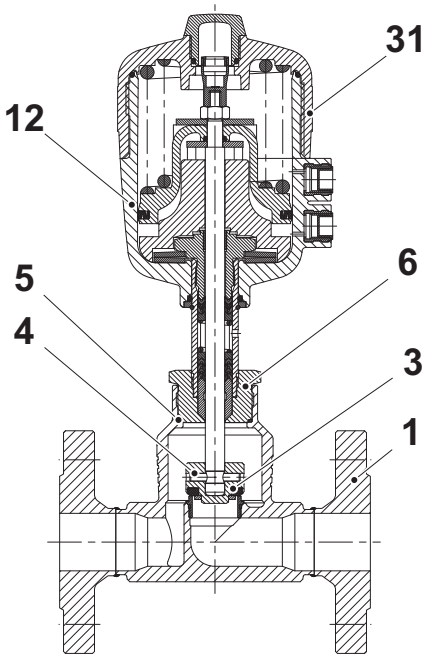

2.2TF503474.en

1 Body
3 Articulate plug
4 Peal pin
5 Graphite seal
6 Nipple
12 Actuator housing
31 Cover

(Cont'd)

(Cont'd)

g) Carefully remove old graphite seal (5) from valve body (1).

Note! Be careful not to damage the seat!

h) Insert new graphite seal (5).

Note! **Stainless steel body only:** Grease over nipple thread (6) with "Klüberpaste UH1 96-402".

i) **Type 2002 only:** Use sealing tape.

j) Thightly fasten actuator with nipple in body.

Note! Observe torques (see table below).

Nipple material	DN [mm]	Torque (appr. values) [Nm]
PPS	13	16
	20	20
	25	23
Brass or stainless steel	13	45
	20	50
	25	60
	32	65
	40	65
	50	70
	65	70

k) **CFA only:** Refasten cover (31) with special key.

l) Examine valve on reliable operation and tightness.

2.2TF503474.en

2012 DN≥65

a) Remove the pneumatic supply and the electrical connection (if a pilot valve is attached).

b) **CFA only:** Pressurize the lower control connection of the actuator with compressed air (6 bar), so that the valve disk is lifted from the valve seat and is not damaged.
CFB and CFI: With control functions B and I, no compressed air must be applied for this purpose.

c) Unscrew actuator on the nipple (6) from valve body (1).

Note! Do not unscrew the screw (50) above the nipple (6).

d) Insert articulate plug (3) into V-block and punch out the seal pin (4).

e) Remove articulate plug (3).

f) Put on new articulate plug (3) align and lock with new seal pin (4).

g) Permanently press bolt bore holes into the articulate plug to both sides with chisel or centre punch.

Type 2012
DN≥65

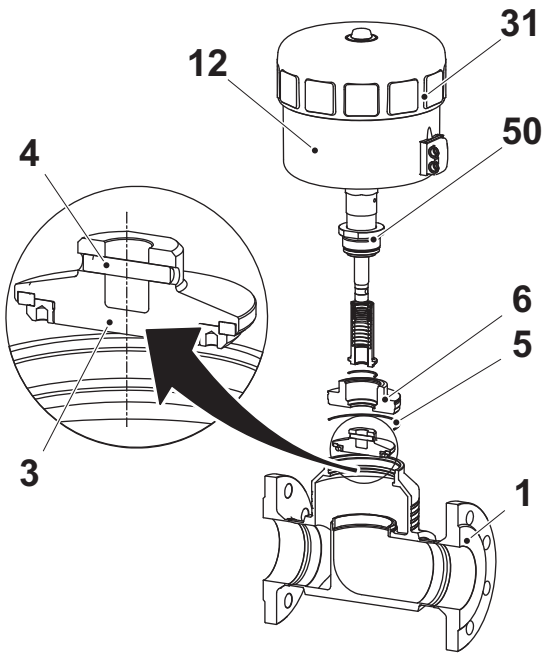

2.2TF503474.en

1 Body
3 Articulate plug
4 Peal pin
5 Graphite seal
6 Nipple
12 Actuator housing
31 Cover
50 Screw

(Cont'd)

(Cont'd)

h) Carefully remove old graphite seal (5) from valve body (1).

Note! Be careful not to damage the seat!

i) Insert new graphite seal (5).

Note! **Stainless steel body only:** Grease over nipple thread (6) with "Klüberpaste UH1 96-402".

j) Thightly fasten actuator with nipple in body.

Note! Observe torques (see table below).

Nipple material	DN [mm]	Torque [Nm]
Stainless steel	65	100 ±5
	80	120 ±5
	100	150 ±5

k) To align the actuator, unscrew the screw (50) above the nipple (6) half ways. Turn the actuator to correct position and retighten the screw with a torque of 100 ±5 Nm.

Note! During this operation, the valve must be in the open position.

2.2TF503474.en

Change Seal Kit

WARNING! **Risk of injury!**
Make sure before dismantling, that the pipeline is drained and free from media

WARNING! **Risk of damage!**
Do not use any pointed or sharp auxiliary means!

Note! The actuator must be completely dismounted in order to allow to replace all the seals.

Replace seal kit of actuator - Disassembly

a) Hold valve on the body (1)

b) Unscrew cover (31) with special key, while counter holding on hex nut of the actuator housing (12).

c) **Actuator sizes G-100 / H-125 mm only:** remove disc (40).

d) **CFA only:** Remove pressure springs (28, 29).

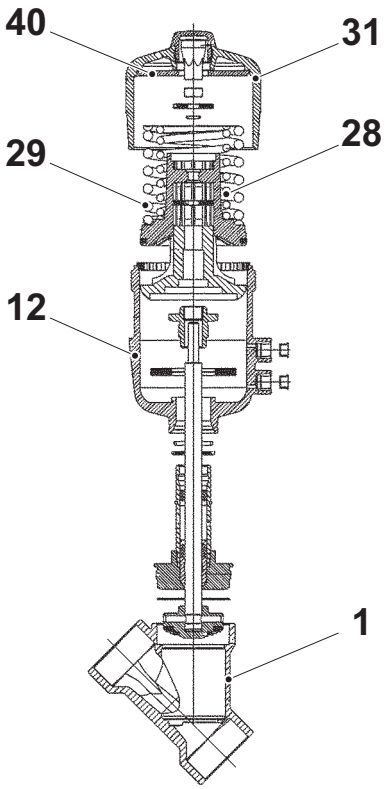

2.2TF503474.en

1 Body
12 Actuator housing
28 Pressure spring
29 Pressure spring
31 Cover
40 Disc

(Cont'd)

(Cont'd)

e) Dismount position indicator (26) with Allen key.

f) Unscrew actuator on the nipple (6) from valve body (1).

g) Carefully hold actuator on the articulate plug (3) between the bore holes (thus only putting pressure on the upper part of the articulate plug).

h) Unfasten nut (25).

i) Remove piston (22) and support disc (24).

j) **CFA only:** Remove volume filler (19) with intermediate disc (20) and O-ring (21).
CFB only: Remove intermediate disc (20), O-ring (21) and pressure spring (35)
CFI only: Remove volume filler (19) with intermediate disc (20).

k) Pull spindle (2) out of actuator (12) and clean spindle thread.

l) Hold actuator on hex nut of nipple (6).

Note! The pipe (8) is screwed into the nipple (6) and fastened using special glue "LOCTITE 274".

2.2TF503474.en

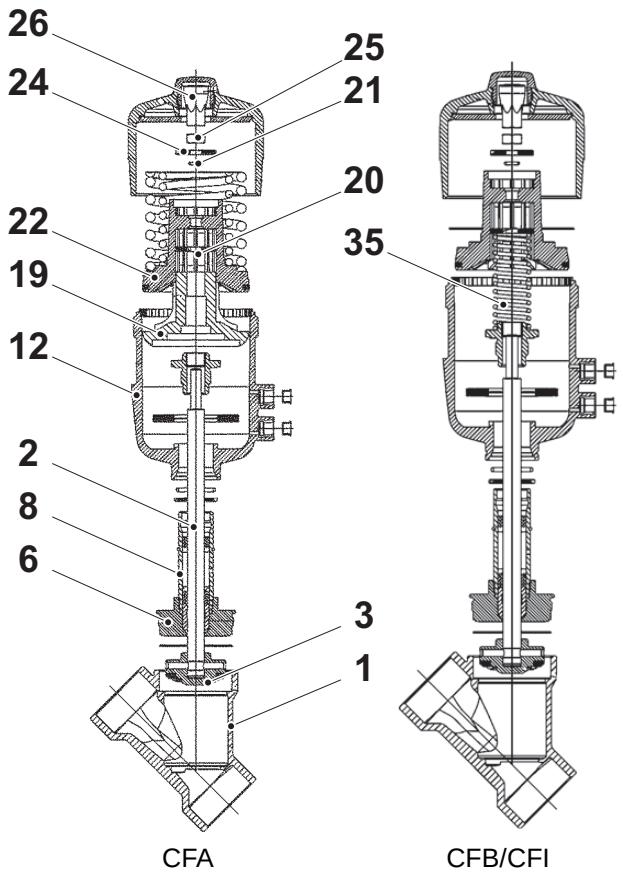

1 Body
2 Spindle
3 Articulate Plug
6 Nipple
8 Pipe
12 Actuator
19 Volume filler
20 Intermediate disc
21 O-ring
22 Piston
24 Support disc
25 Nut
26 Position indicator
35 Spring (CFB only)

(Cont'd)

(Cont'd)

m) Unfasten screw (18) with wrench and remove it.

n) Remove plug springs (17).

o) Remove actuator housing (12).

p) Change O-ring (11).

Note! Old reinforcement ring (10) remains on the pipe (8).

q) Take blunt tool and carefully slide packing gland kit (7,13,39) out of pipe (8).

Note! Check the assembly of packing gland kit (13) so the new parts came in exactly same order after change. See also the drawing.

r) Thoroughly clean all individual parts after disassembly.

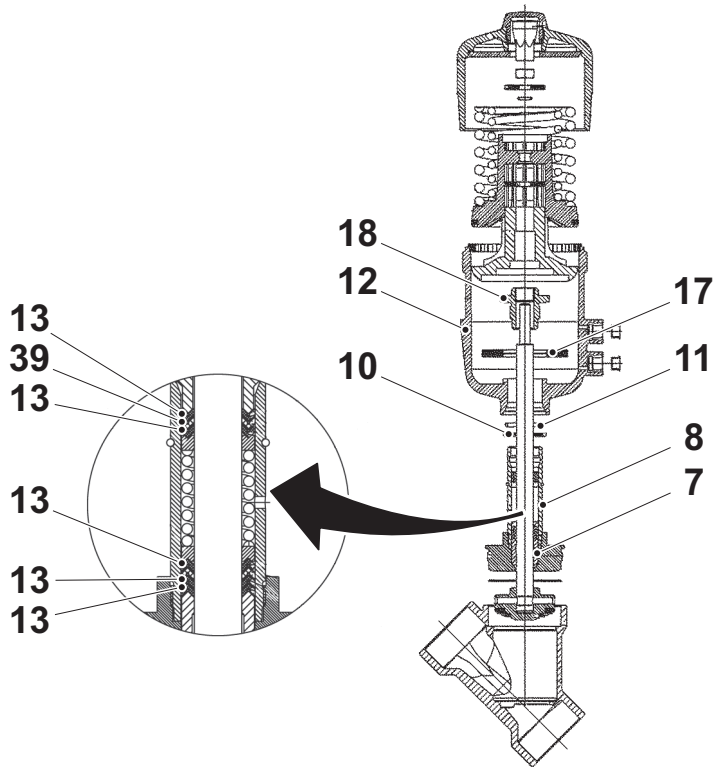

2.2TF503474.en

7 Wiper
8 Pipe
10 Reinforcement ring
11 O-ring
12 Actuator housing
13 Packing gland kit
17 Plug springs
18 Screw
39 Packing gland

Replace seal kit of actuator - Assemble

a) Restructure packing gland kit according to drawing:
   - Grease over new wiper “OKS 1110-3” and insert into pipe.
   - Thoroughly grease over every individual stem seal with “OKS 1110-3” (spare grease of packing gland).
   - Place packing gland kit (7,13,39 plus some other parts) into pipe (8) in correct order according to detail drawing.
   - Push packing gland kit into pipe (8) until it stops, while holding on nipple (6) and screwing in packing gland kit with screw (18), then **immediately remove screw (18)**.

b) Place actuator housing (12), plug springs (17) and screw (18) onto pipe (8).

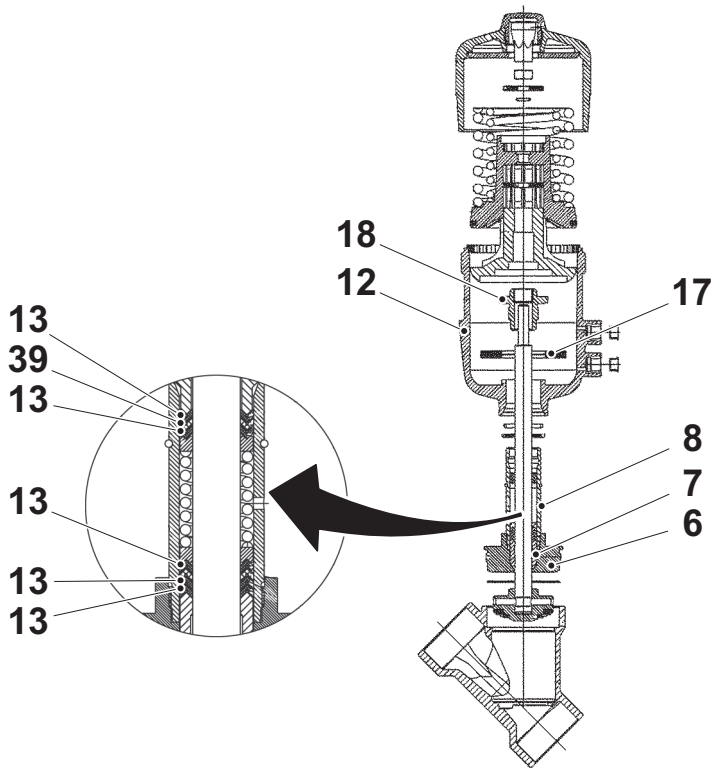

2.2TF503474.en

6 Nipple
7 Wiper
8 Pipe
12 Actuator housing
13 Packing gland kit
17 Plug springs
18 Screw
39 Packing gland

(Cont'd)

(Cont'd)

c) Firmly tighten screw (18) with wrench, thus observing the centric position of the plug springs (17).

d) Slightly grease over spindle (2) with OKS 1110-3 and plug appropriate mandrell on spindle thread.

e) Slide spindle into actuator through the nipple (6) and remove mandrell.

f) **CFA only:** Plug volume filler (19), disc (20), and slightly greased over o-ring (21) on spindle.
CFB only: Insert pressure spring (35).
CFI only: Insert volume filler (19).

g) **CFB and CFI:** Plug disc (20), and slightly greased over O-ring (21) on spindle.

h) Grease over inner surface of actuator ring (12)
   – with “Lagermeister SL” for polyamid (PA) -actuator and
   – with “Amblygon TA 30-1” for polyphenylene sulfide (PPS) -actuator.

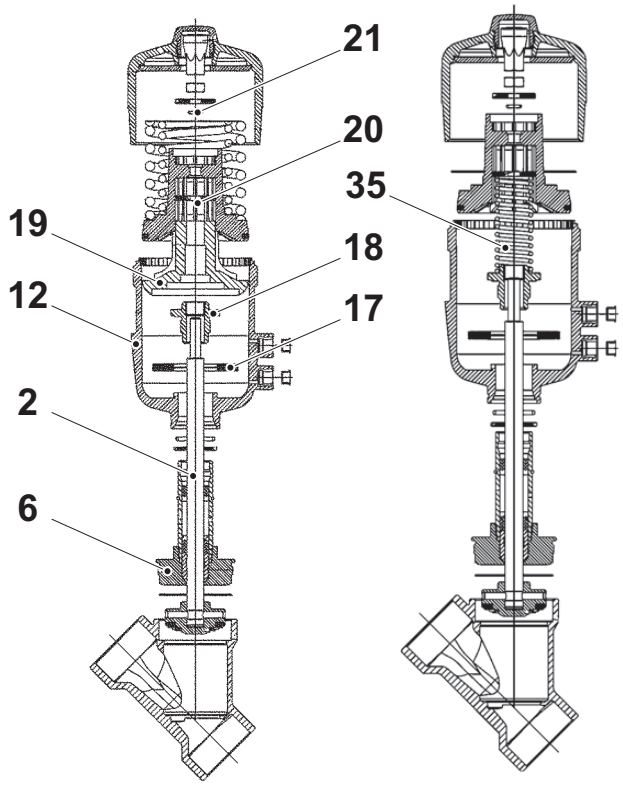

CFA CFB/CFI

2 Spindle
6 Nipple
12 Actuator housing
17 Plug springs
18 Screw
19 Volume filler
20 Intermediate disc
21 O-ring
35 Spring (CFB only)

2.2TF503474.en

(Cont'd)

(Cont'd)

i) Remove old piston seal (23) from piston (22), clean support disc (24) and thoroughly grease over it (same grease as for actuator housing).

j) Insert new piston seal (23).

k) Insert piston (22) and support disc (24) and slightly grease over inner surface of actuator housing (12).

l) **CFA only:** Wet spindle thread (2) with special glue “LOCTITE 274” and screw on nut (25).
CFB and CFI: Moisten nut (25) with special glue “LOCTITE 274” and press piston against the spring and screw on nut (25) tightly.

m) Carefully hold articulate plug (3) between the bore holes (thus only putting pressure on the upper part of the articulate plug).

n) Tighten nut (25) with wrench and mount position indicator (26).

o) Hold valve body (1).

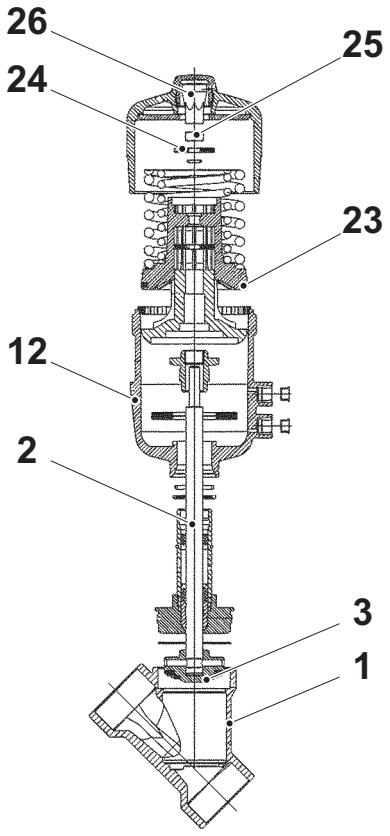

1 Body
2 Spindle
3 Articulate plug
12 Actuator housing
22 Piston
23 Piston seal
24 Support disc
25 Nut
26 Position indicator

(Cont'd)

2.2TF503474.en

(Cont'd)

p) **CFB and CFI:** Replace O-ring (32), thus removing transparency cap.

q) **CFB and CFI:** Replace O-ring (30).

r) **CFB and CFI:** Slightly grease over cover thread (same grease as for actuator housing).

s) Replace graphite seal (5)

Caution! Do not damage the seal edges when removing the seal!

t) **Stainless steel body only:** Grease over nipple thread (6) with "Klüberpaste UH1 96-402".

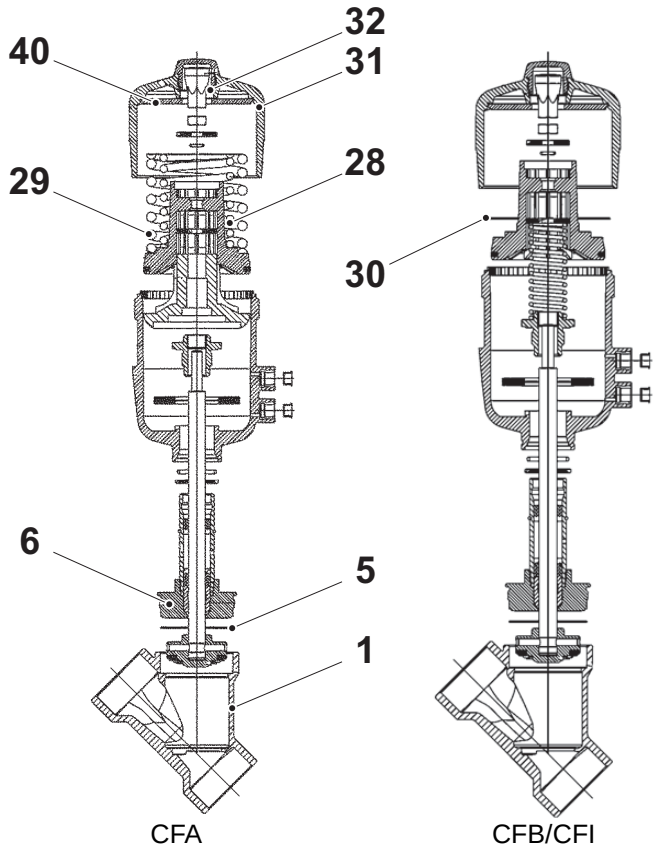

1 Body
5 Graphite seal
6 Nipple
28 Pressure spring
29 Pressure spring
30 O-Ring
31 Cover
32 O-ring
40 Disc

2.2TF503474.en

(Cont'd)

(Cont'd)

u) Screw nipple (6) and actuator into valve body (1), observe torque according to table below.

v) **Type 2002 only:** use seal tape.

w) Insert springs (28, 29).

x) **Actuator sizes G-100 / H-125 mm only:** Insert disc (40).

y) Slightly grease over cover thread (same grease as for actuator housing).

z) Put on cover (31) and refasten with special key.

aa) Examine valve on reliable operation and tightness.

Nipple material	DN [mm]	Torque (appr. values) [Nm]
PPS	13	16
	20	20
	25	23
Brass or stainless steel	13	45
	20	50
	25	60
	32	65
	40	65
	50	70
	65	70

2.2TF503474.en

Spare parts

On/off-valve 2000 (2/2-way)

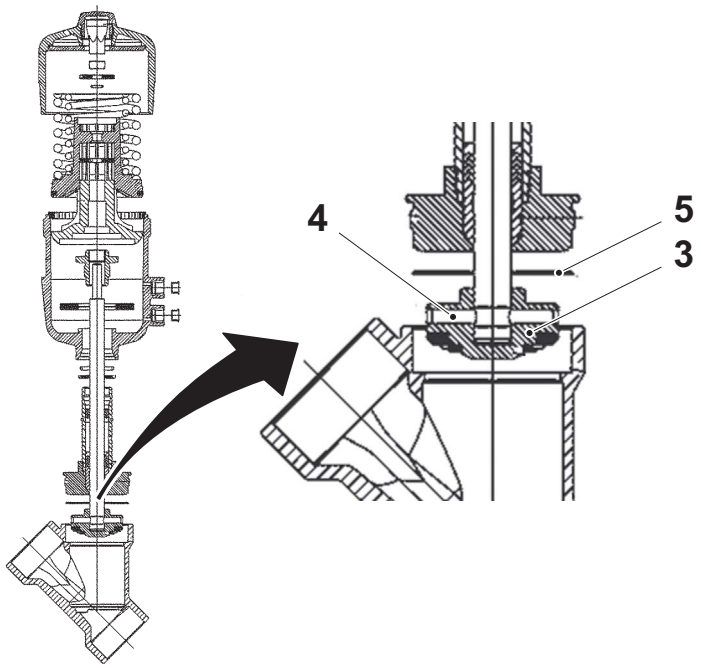

Spare part article No.	Description	Included parts	Pos.	Qty.
6-990416-27	Spare parts kit, Seat valve, DN15, Gunmetal / PTFE	- Valve plug - Pin - Packing	3 4 5	1 1 1
6-990416-28	Spare parts kit, Seat valve, DN20, Gunmetal / PTFE			
6-990416-29	Spare parts kit, Seat valve, DN25, Gunmetal / PTFE			
6-990416-30	Spare parts kit, Seat valve, DN32, Gunmetal / PTFE			
6-990416-31	Spare parts kit, Seat valve, DN40, Gunmetal / PTFE			
90520-7049	Spare parts kit, Seat valve, DN50, Gunmetal / PTFE			
90520-7050	Spare parts kit, Seat valve, DN65, Gunmetal / PTFE			

2.2Tf503475.en

Spare part article No.	Description	Included parts	Pos.	Qty.
6-990416-34	Spare parts kit, Seat valve, DN15, SS / PTFE	- Valve plug - Pin - Packing	3 4 5	1 1 1
6-990416-35	Spare parts kit, Seat valve, DN20, SS / PTFE			
6-990416-36	Spare parts kit, Seat valve, DN25, SS / PTFE Actuator D50			
90503-4833	Spare parts kit, Seat valve, DN25, SS / PTFE Actuator E63-F80 and manual			
6-990416-37	Spare parts kit, Seat valve, DN32, SS / PTFE			
6-990416-38	Spare parts kit, Seat valve, DN40, SS / PTFE			
90519-9445	Spare parts kit, Seat valve, DN50, SS / PTFE			
90519-9446	Spare parts kit, Seat valve, DN65, SS / PTFE			

2.2Tf503475.en

On/off-valve 2002 (3-way)

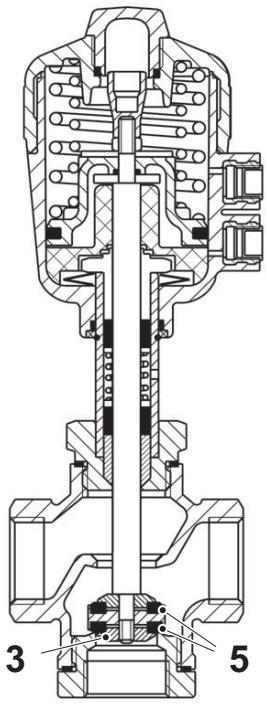

Spare part article No.	Description	Included parts	Pos.	Qty.
90503-5042	Spare parts kit, Seat valve, DN25, Gunmetal / PTFE	- Valve plug - Seal	3 5	1 2
90503-1796	Spare parts kit, Seat valve, DN32-DN40, Gunmetal / PTFE			
90503-5043	Spare parts kit, Seat valve, DN50, Gunmetal / PTFE			

2.2Tf503475.en

On/off-valve 2012 ≤ DN65

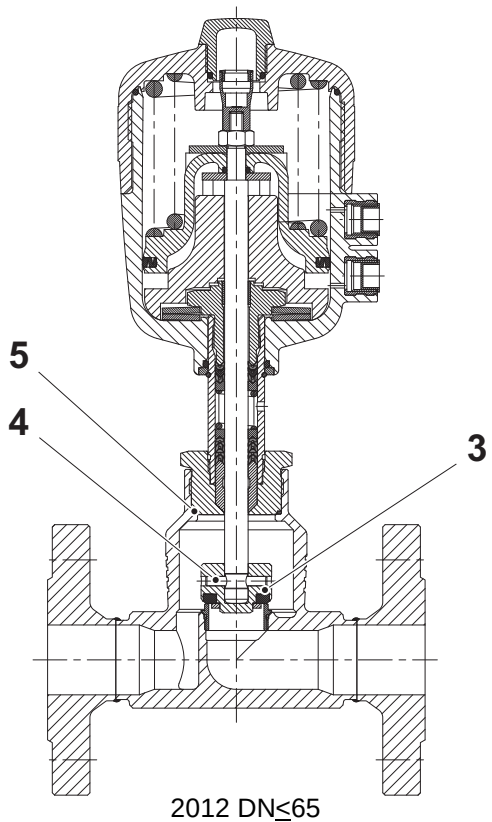

2012 DN≤65

2.2Tf503475.en

Spare part article No.	Description	Included parts	Pos.	Qty.
90511-8900	Spare parts kit, Seat valve, DN10 and 15, SS / PTFE	- Valve plug - Pin - Packing	3 4 5	1 1 1
6-990416-35	Spare parts kit, Seat valve, DN20, SS / PTFE			
90503-4833	Spare parts kit, Seat valve, DN25, SS / PTFE Actuator E63-F80			
6-990416-36	Spare parts kit, Seat valve, DN25, SS / PTFE Actuator D50			
6-990416-37	Spare parts kit, Seat valve, DN32, SS / PTFE			

Spare parts

Spare part article No.	Description	Included parts	Pos.	Qty.
6-990416-38	Spare parts kit, Seat valve, DN40, SS / PTFE	- Valve plug - Pin - Packing	3 4 5	1 1 1
90519-9445	Spare parts kit, Seat valve, DN50, SS / PTFE			
90511-8901	Spare parts kit, Seat valve, DN65, SS / PTFE Actuator H125			

2.2Tf503475.en

On/off-valve 2012 ≥ DN65

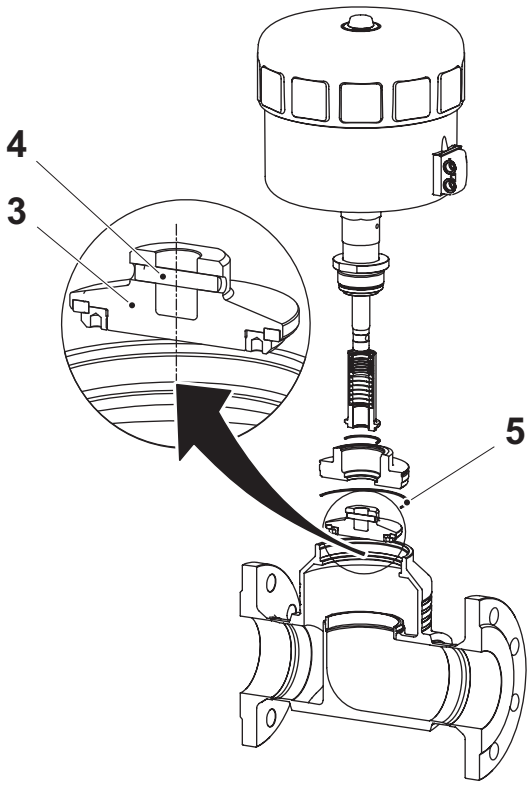

2012 DN≥65

2.2Tf503475.en

Spare part article No.	Description	Included parts	Pos.	Qty.
90511-8902	Spare parts kit, Seat valve, DN65, SS / PTFE Actuator K175	- Valve plug - Pin - Packing	3 4 5	1 1 1
6-990416-21	Spare parts kit, Seat valve, DN80, SS / PTFE Actuator H125			
90511-8903	Spare parts kit, Seat valve, DN80, SS / PTFE Actuator K175-L225			
90511-8904	Spare parts kit, Seat valve, DN100, SS / PTFE Actuator K175-L225			

Actuator 2000

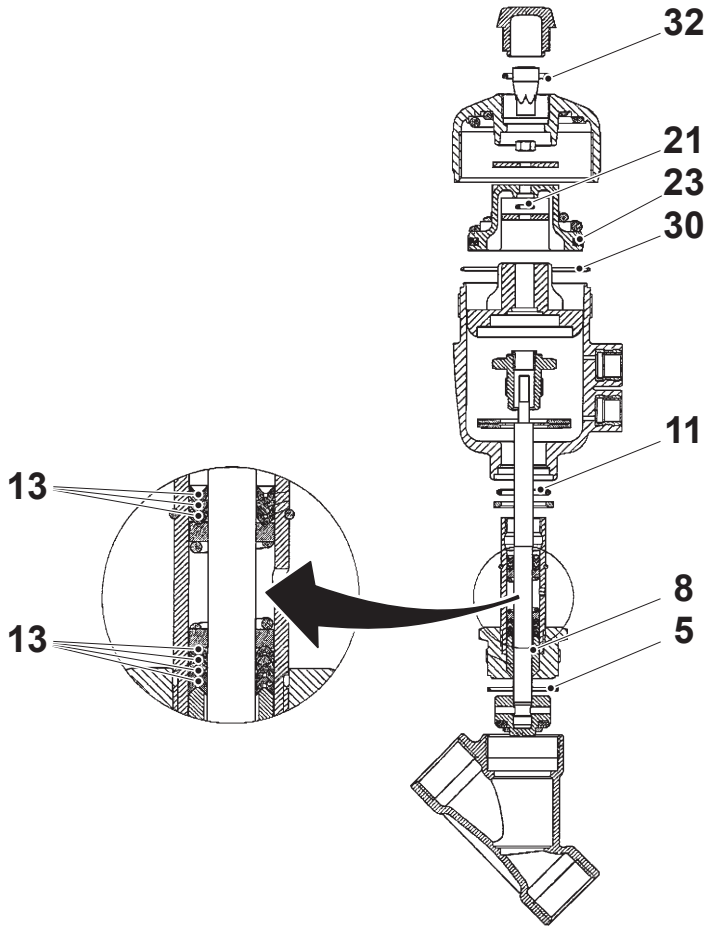

2.2Tf503475.en

Spare part article No.	Description	Included parts	Pos.	Qty.
90503-3885	Spare parts kit, packings, Actuator C40 Gunmetal/SS/PTFE	- Packing - Viper - O-ring - Packing assembly - O-ring - Piston Seal - O-ring - O-ring	5 8 11 13 21 23 30 32	1 1 1 7 1 1 1 1
6-990416-20	Spare parts kit, packings, Actuator D50 SS / PTFE			
6-990416-22	Spare parts kit, packings, Actuator D50 Gunmetal / PTFE			
90519-0408	Spare parts kit, packings, Actuator E63 SS / PTFE			
6-990413-83	Spare parts kit, packings, Actuator F80 SS / PTFE			
6-990413-83	Spare parts kit, packings, Actuator F80 Gunmetal / PTFE			

Spare part article No.	Description	Included parts	Pos.	Qty.
6-990413-88	Spare parts kit, packings, Actuator G100 SS / PTFE	- Packing - Viper - O-ring - Packing assembly - O-ring - Piston Seal - O-ring - O-ring	5 8 11 13 21 23 30 32	1 1 1 7 1 1 1 1
6-990416-21	Spare parts kit, packings, Actuator H125 SS / PTFE			
6-990416-21	Spare parts kit, packings, Actuator H125 Gunmetal / PTFE			
90503-1794	Spare parts kit, packings, Actuator K175-L225 DN80			
90503-0779	Spare parts kit, packings, Actuator K175-L225 DN100			

2.2Tf503475.en

Tetra Pak

Maintenance & Spare Parts

Safety valve

(Leser)

433/441/442



1.0 1220118-0101.fro

Tetra Pak

Doc No. 1220118-0101

Safety valve

433/441/442

This document refers to components specified in Technical Manual, on Maintenance & Spare Parts CD/DVD or on Tetra Pak Intranet.

1.0 1220118-0101.fro

Version 04 Issue 2011-03

Doc No. 1220118-0101

Tetra Pak

Tetra Pak Processing Systems AB

Table of contents

Maintenance 1

Description 1

Check for functionality 1

Change of complete valve 2

Spare Parts 3

Not applicable for this component! 3

1.0 1220118-0101.TOC

This page intentionally left blank

Maintenance

Description

The safety valve is spring-loaded and equipped with a lifting lever. It is intended for both gases, steam and liquids.

Check for functionality

Note!

Functionality check is recommended to be carried out **every 4 months**.

a) Open the valve manually by pulling the lever (1).

b) Close the valve by a slow relief of the lever.

c) If the valve is leaking, repeat the procedure.

d) If the valve is still leaking, change the valve as described on page 2.

Note!

It is important to ensure that the lifting lever does not engage the spindle cap after the lifting procedure. The lever must be deflected towards the centre line of the bonnet until the lifting forks are disengaged.

2.2Tf504561.en

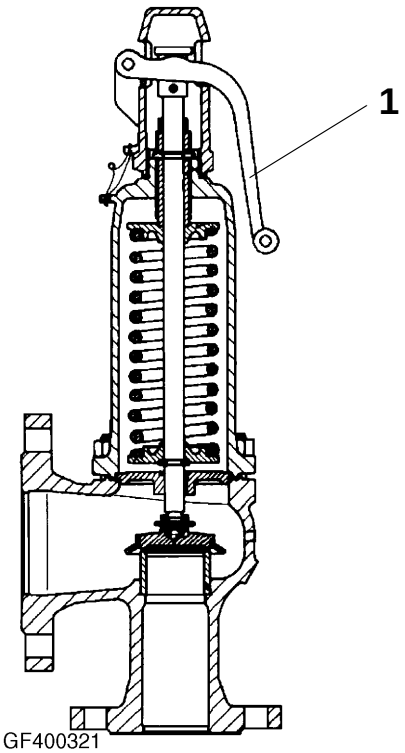

1 Lifting lever

Change of complete valve

WARNING!

Risk of burning!
Make sure before dismantling, that the system is drained and free from media. The valve surface temperature must be lower than 65 °C.

Check that the new valve has the same article number and set pressure as the valve to be changed.

a) Depressurize the system.
b) Remove the nuts on the flanges, and remove the valve.
c) Change the flange gaskets if damaged.
d) Refit in the reverse order. Never use Teflon tape when refitting.

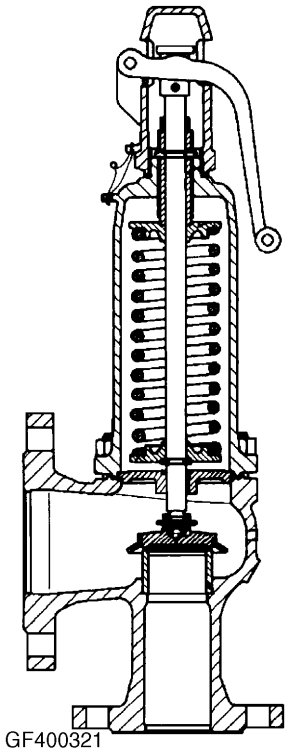

2.2Tf5045561.en

Spare Parts

Not applicable for this component!

2.2TF000880.en

Tetra Pak

Maintenance & Spare Parts

Unique Single Seat Valve, Standard

(Alfa Laval Flow)
SSV Stop valves



1.0 1221121-0101.fro

Tetra Pak

Doc No. 1221121-0101

Unique Single Seat Valve, Standard

SSV Stop valves

This document refers to components specified in Technical Manual, on Maintenance & Spare Parts CD/DVD or on Tetra Pak Intranet.

1.0 1221121-0101.fro

Version 04 Issue 2013-03

Doc No. 1221121-0101

Tetra Pak

Tetra Pak Processing Systems AB

Table of contents

General 1

Function description. 1

Maintenance 2

Pre-use check 2

Valve 3

Disassemble valve 3

Reassemble valve. 5

Plug seal replacement 6

Actuator, optional maintainable version 9

Change spare part kit 9

Actuator, both standard and optional maintainable version 11

Actuator bushing replacement 11

Cleaning 12

Troubleshooting 14

Spare parts 15

Valve - 25-51 mm/DN25-50/1”-2” 15

Valve - 63.5-101.6 mm/DN65-100/2½”-4” 19

Valve Long Stroke (LS) - 38-51 mm/DN40-50/1½”-2” . . . 23

Valve LS - 63.5-101.6 mm/DN65-100/2½”-4” 26

Actuator - optional maintainable version 25-101.6mm/DN25-100 30

Actuator - standard version 25-101.6mm/DN25-100 34

Actuator Two Step (TS) - maintainable version 38-101.6mm/DN40-100 37

Tools 40

1.0 1221121-0101.TOC

This page intentionally left blank

General

Function description

The Unique Single Seat Valve, shut-off version, is an air-operated seat valve in a sanitary and flexible design giving a wide field of applications, e.g. as a shut-off valve with two or three ports.

The valve is remote-controlled by means of compressed air. To reduce the wear of sealings there is a controlled compression of seals by metal to metal contact. The actuator is connected to the valve body using a yoke and all components are assembled with clamp rings.

1.0 tf505001.en

Maintenance

Pre-use check

WARNING!

Risk of injury!
Never service the valve when it is hot.
Never service the valve with valve and pipelines under pressure.
Never stick your fingers through the valve ports if the actuator is supplied with compressed air.
Never touch the clip assembly or the actuator piston rod if the actuator is supplied with compressed air.
Always release the compressed air after use.
Always remove the CIP connections, if supplied, before service.

Note! Check the valve for smooth operation after service.

a) Supply compressed air to the actuator.

b) Operate the valve several times to ensure that it operates smoothly.

Note! Pay special attention to the warnings!

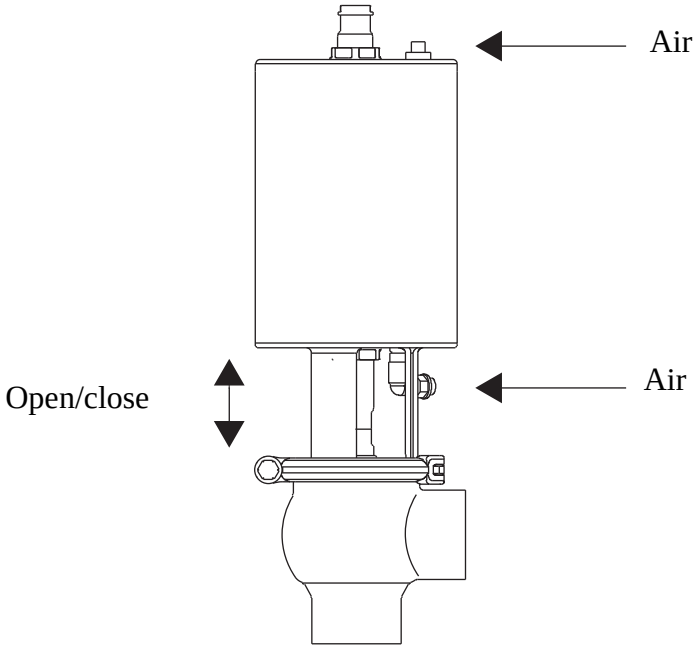

1.0 tf505001.en

Valve

Disassemble valve

WARNING!

Risk of injury!
- Never service the valve when it is hot.
- Never service the valve with valve and pipelines under pressure.
- Make sure that the pipeline is drained and free from media before servicing the valve.
- The valve and pipelines must **never** be pressurised when serviced.
- Never stick your fingers through the valve ports if the actuator is supplied with compressed air.
- Never touch the clip assembly or the actuator piston rod if the actuator is supplied with compressed air.
- Always release compressed air after use.

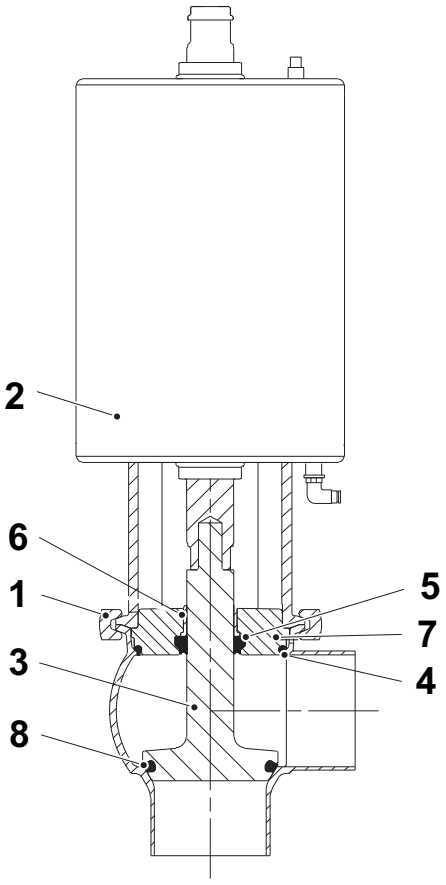

1 Clamp
2 Actuator
3 Valve plug
4 O-ring
5 Lip seal
6 Bushing
7 Bonnet
8 Plug seal

(Cont'd)

1.0 tf505001.en

(Cont'd)

Note! NO: Normally open
NC: Normally closed
A/A: Air/air activated

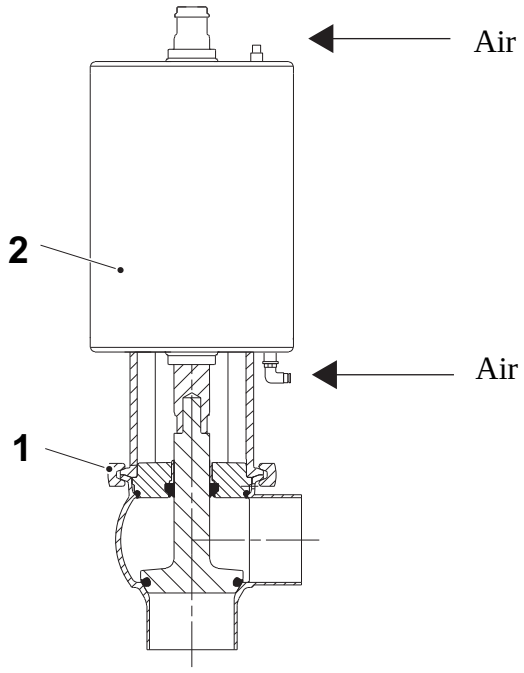

a) **NC**: Supply compressed air to the actuator.
b) Loosen and remove clamp (1).
c) **NC**: Release compressed air.
d) Lift away the actuator (2).

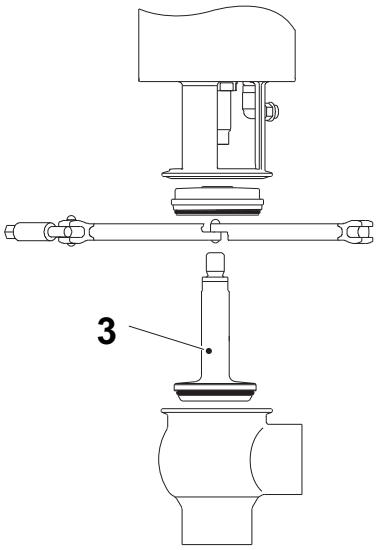

1.0 tf505001.en

(Cont'd)

(Cont'd)

e) Unscrew and remove valve plug (3).

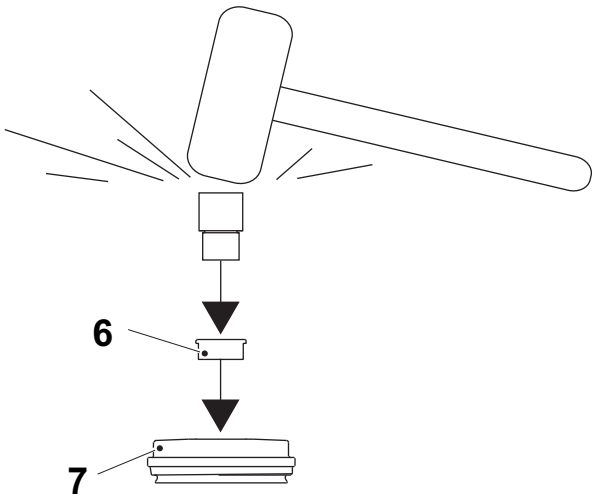

f) Remove O-ring (4), lip seal (5) and bushing (6) in bonnet (7).

Note! Use bushing tool and rubber mallet.

Reassemble valve

Reassemble in the reverse order to disassemble of the valve.

Note! Lubricate O-ring (4) and lip seal (5) with Klüber Paraliq GTE 703.

1.0 tf505001.en

Plug seal replacement

Elastomer plug seal replacement

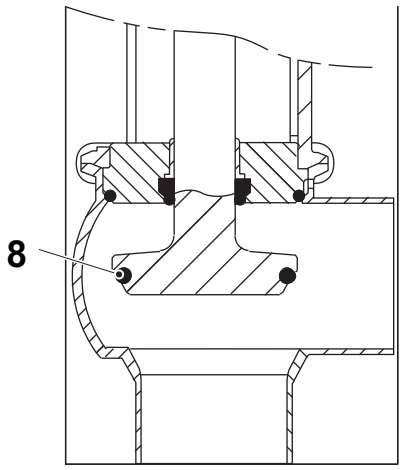

a) Remove the old plug seal (8) using a knife, screwdriver or similar. Be careful not to damage metal parts.

b) Pre-mount the plug seal (8) without pressing it into the groove.

With mounting tool

c) Put the plug (3) in the lower part (30) of the mounting tool.

d) Put the upper part of mounting tool (31) over the plug and press down.

e) The seal will be visible in one of the bores (32). Very carefully insert a narrow screwdriver just under the seal.

f) Carefully press it down, in order to release compressed air behind the seal.

1.0 tf505001.en

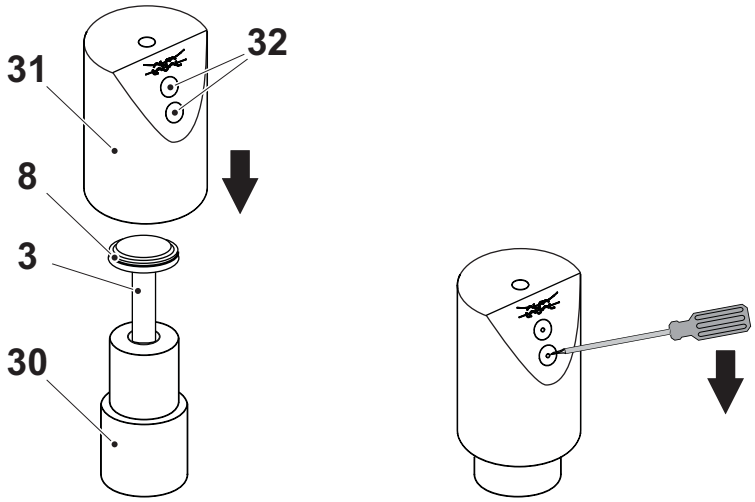

3 Plug
8 Plug seal
30 Mounting tool lower part
31 Mounting tool upper part
32 Bores

Without mounting tool

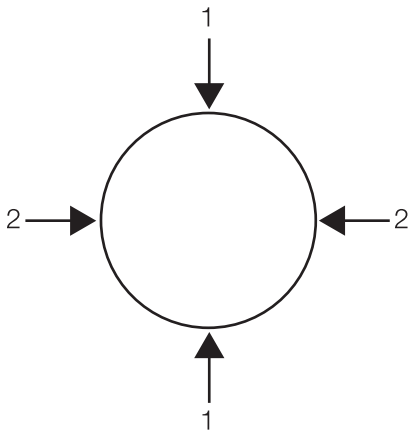

c) Squeeze plug seal (8) into the groove using opposite pressure points.

d) Release compressed air behind plug seal (8).

(Cont'd)

(Cont'd)

TR2 seat ring replacement

a) Place the plug element on a firm support.

b) Using a utility knife, partially and carefully cut through the upper ring portion of the TR2 plug avoiding contact with stainless steel stem.

c) Force apart both cut ends of the plug for removal from stem.

d) TR2 plugs are installed by applying uniform pressure on all sides. Pressure can be applied using the mounting tool for TR2 plugs.

e) Using a piece of metal and a rubber mallet, place a precise tab to make the TR2 plug snap on to the stem. Reverse the tool and tab again to secure proper fit.

f) Examine seat assembly in one hand - rotate the TR2 plug. (For proper CIP cleaning the TR2 plug should turn freely on the stem.)

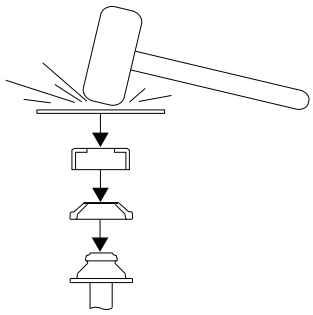

1.0 tf505001.en

Actuator, optional maintainable version

Change spare part kit

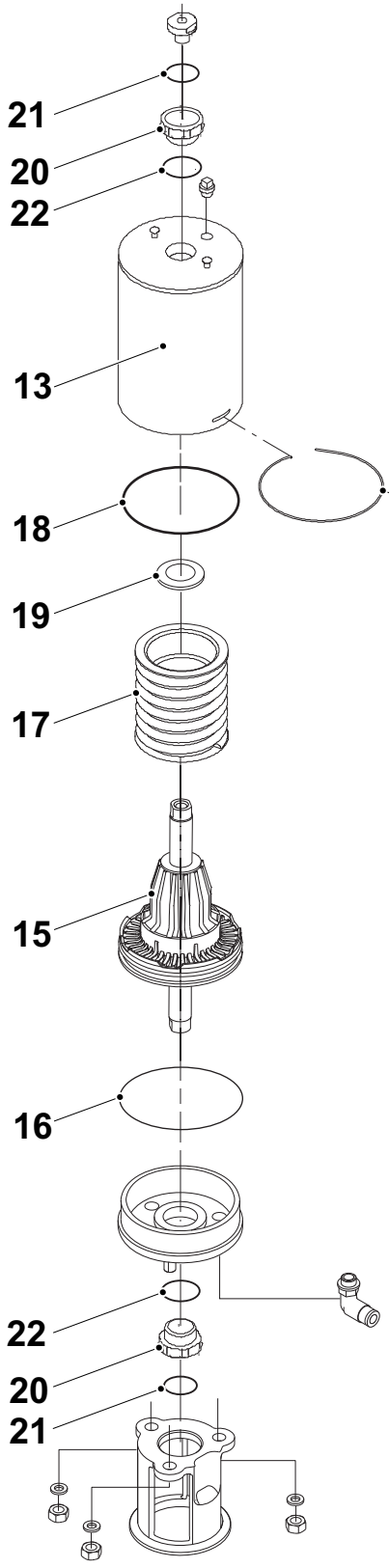

13 Cylinder
14 Lock wire
15 Piston
16 O-ring
17 Spring assembly
18 O-ring
19 Support disc
20 Bushing
21 O-ring
22 O-ring

1.0 tf505001.en

WARNING!

Dismantling/Assembly

Risk of injury!

- Make sure that the pipelines are drained and free from media before servicing the valve!
- **Never** service the valve when it is hot!
- **Never** service the valve with valve and pipelines under pressure.
- **Always** release compressed air after use.
- **Never** touch the clip assembly or the actuator piston rod if the actuator is supplied with compressed air.
- **Never** put your fingers through the valve ports if the actuator is supplied with compressed air!

Note! NC = Normally closed.

NO = Normally open.

A/A = Air/air activated

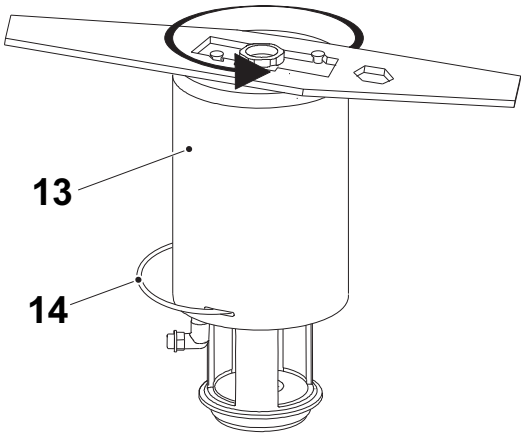

1.0 tf505001.en

a) Rotate cylinder (13).
b) Remove lock wire (14) and pull away cylinder (13).
c) Unscrew nuts and remove yoke.
d) Unscrew top and bottom bushings (20).
e) Remove piston (15) with O-ring (16) and spring assembly (17).
f) Remove O-ring (18) and support disc (19).

Note! The A/A actuator has no spring assembly.

Assembly

Assembly of the actuator is made in the reverse order to dismantling.

Note! Lubricate O-rings (16) and (18) with Molykote Longterm 2 plus before fitting.

Actuator, both standard and optional maintainable version

Actuator bushing replacement

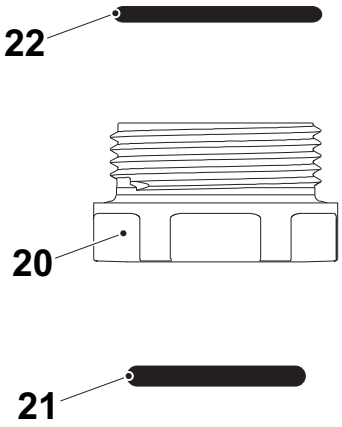

a) Unscrew and remove top and bottom bushings (20) with O-rings (21) and (22).

b) Lubricate O-rings (21) and (22) with Molykote Longterm 2 plus before fitting.

c) Fit bushings (20) and O-rings (21) and (22). Be careful not to overtighten.

1.0 tf505001.en

Cleaning

DANGER! **Risk of injury!**
Always handle lye and acid with great care!
Always use rubber gloves!
Always use protective goggles!

WARNING! **Risk of burning!**
Never touch the pump or the pipelines when sterilizing.

WARNING! **Risk of injury!**
Always rinse well with clean water after the cleaning.

Note! Clean the plug and seats correctly

Note! Lift and lower valve plug momentarily!

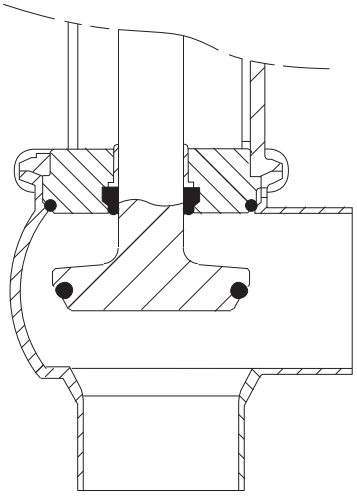

1.0 tf505001.en

Note! The cleaning agents must be stored/discharged in accordance with current rules/directives.

Note! Avoid excessive concentration of the cleaning agent, dose gradually.

Note! Adjust the cleaning flow to the process.

(Cont'd)

(Cont'd)

Examples of cleaning agents:

Use clean water, free from chlorides.

– 1% by weight NaOH at 70°C.

1 kg NaOH + 100 litre water = Cleaning agent

2.2 litre 33% NaOH + 100 litre water = Cleaning agent

– 0.5% by weight HNO_3 at 70°C.

0.7 litre 53% HNO3 + 100 litre water = Cleaning agent

NaOH = Caustic soda
HNO_3= Nitric acid

1.0 tf505001.en

Troubleshooting

Problem	Cause	Action
External product leakage	- Worn or product affected lipseal and/or O-ring	- Replace the seals - Replace with seals of a different rubber grade
Internal product leakage	- Worn or product affected plug seal - Product deposits on the seat and/or plug - Product pressure exceeds actuator specification	- Replace the seal - Frequent cleaning - Replace with a high pressure actuator - Use auxiliary air on the spring side - Reduce product pressure
Water hammer	- The flow direction is the same as the closing direction	- The flow direction should be against the closing direction - Throttle air release of solenoid in top unit
The valve does not open/close	- Product pressure exceeds actuator specification	- Replace with a high pressure actuator - Use auxiliary air on the spring side - Reduce product pressure

1.0 tf505001.en

Spare parts

Valve - 25-51 mm/DN25-50/1”-2”

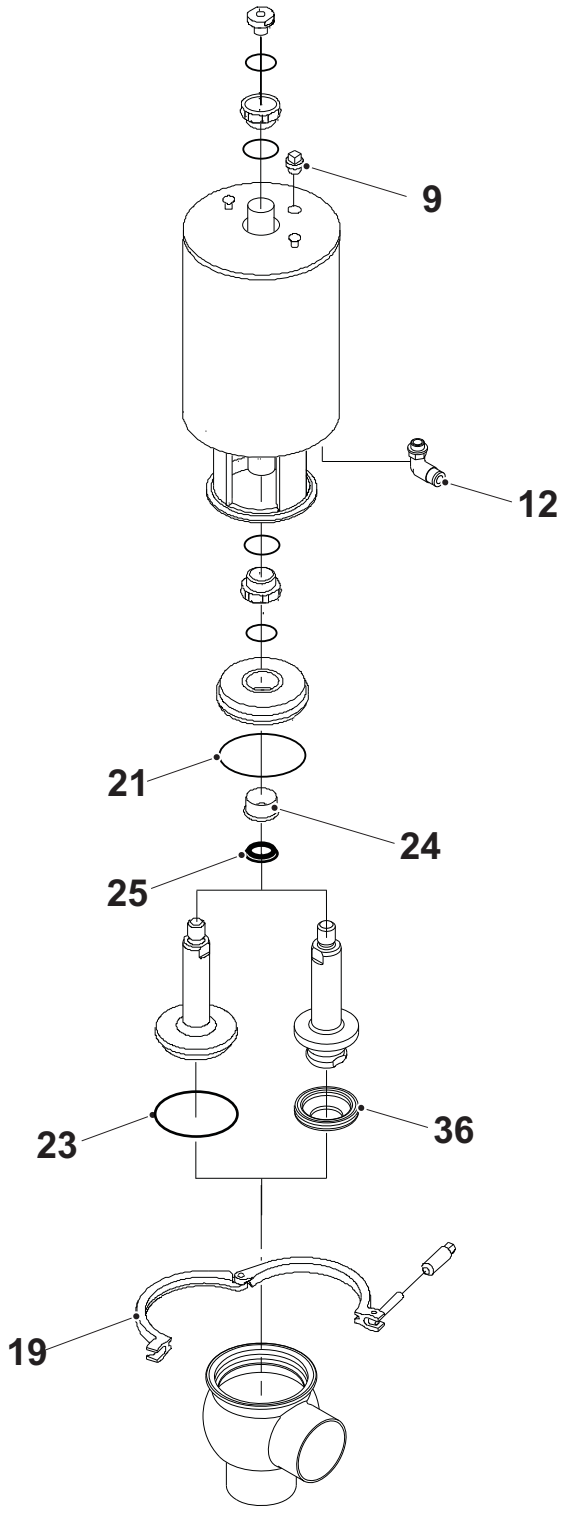

1.0 tf505002.en

DN 25 / 1”

Spare part article No.	Description	Included parts	Pos.	Qty
6-9611-92-6501	Service kit, EPDM	O-ring Lip seal Plug seal	21 25 23	1 1 1
6-9611-92-6507	Service kit, HNBR	O-ring Lip seal Plug seal	21 25 23	1 1 1
6-9611-92-6513	Service kit, FPM	O-ring Lip seal Plug seal	21 25 23	1 1 1
6-9612-93-9303	Clamp	-	19	1
6-9613-41-4101	Plug	-	9	1
6-9611-99-1988	Air fitting (6 mm)	-	12	1
6-9613-12-5002	Bushing	Bushing	24	1

Alternative TR2

Spare part article No.	Description	Included parts	Pos.	Qty
6-9611-92-6576	Service kit, EPDM	O-ring Lip seal Plug seal	21 25 36	1 1 1
6-9611-92-6577	Service kit, HNBR	O-ring Lip seal Plug seal	21 25 36	1 1 1
6-9611-92-6578	Service kit, FPM	O-ring Lip seal Plug seal	21 25 36	1 1 1
6-9612-93-9316	Clamp	-	19	1
6-9613-41-4101	Plug	-	9	1
6-9611-99-4682	Air fitting (1/4“)	-	12	1
6-9613-12-5002	Bushing	Bushing	24	1

1.0 tf505002.en

DN 40 / 1½”

Spare part article No.	Description	Included parts	Pos.	Qty
6-9611-92-6502	Service kit, EPDM	O-ring Lip seal Plug seal	21 25 23	1 1 1
6-9611-92-6508	Service kit, HNBR	O-ring Lip seal Plug seal	21 25 23	1 1 1
6-9611-92-6514	Service kit, FPM	O-ring Lip seal Plug seal	21 25 23	1 1 1
6-9612-93-9303	Clamp	-	19	1
6-9613-41-4101	Plug	-	9	1
6-9611-99-1988	Air fitting (6 mm)	-	12	1
6-9613-12-5002	Bushing	Bushing	24	1

Alternative TR2

Spare part article No.	Description	Included parts	Pos.	Qty
6-9611-92-6561	Service kit, EPDM	O-ring Lip seal Plug seal	21 25 36	1 1 1
6-9611-92-6566	Service kit, HNBR	O-ring Lip seal Plug seal	21 25 36	1 1 1
6-9611-92-6571	Service kit, FPM	O-ring Lip seal Plug seal	21 25 36	1 1 1
6-9612-93-9316	Clamp	-	19	1
6-9613-41-4101	Plug	-	9	1
6-9611-99-4682	Air fitting (1/4”)	-	12	1
6-9613-12-5002	Bushing	Bushing	24	1

1.0 tf505002.en

DN 50 / 2”

Spare part article No.	Description	Included parts	Pos.	Qty
6-9611-92-6503	Service kit, EPDM	O-ring Lip seal Plug seal	21 25 23	1 1 1
6-9611-92-6509	Service kit, HNBR	O-ring Lip seal Plug seal	21 25 23	1 1 1
6-9611-92-6515	Service kit, FPM	O-ring Lip seal Plug seal	21 25 23	1 1 1
6-9612-93-9304	Clamp	-	19	1
6-9613-41-4101	Plug	-	9	1
6-9611-99-1988	Air fitting (6 mm)	-	12	1
6-9613-12-5002	Bushing	Bushing	24	1

Alternative TR2

Spare part article No.	Description	Included parts	Pos.	Qty
6-9611-92-6562	Service kit, EPDM	O-ring Lip seal Plug seal	21 25 36	1 1 1
6-9611-92-6567	Service kit, HNBR	O-ring Lip seal Plug seal	21 25 36	1 1 1
6-9611-92-6572	Service kit, FPM	O-ring Lip seal Plug seal	21 25 36	1 1 1
6-9612-93-9317	Clamp	-	19	1
6-9613-41-4101	Plug	-	9	1
6-9611-99-4682	Air fitting (1/4”)	-	12	1
6-9613-12-5002	Bushing	Bushing	24	1

1.0 tf505002.en

Valve - 63.5-101.6 mm/DN65-100/2½”-4”

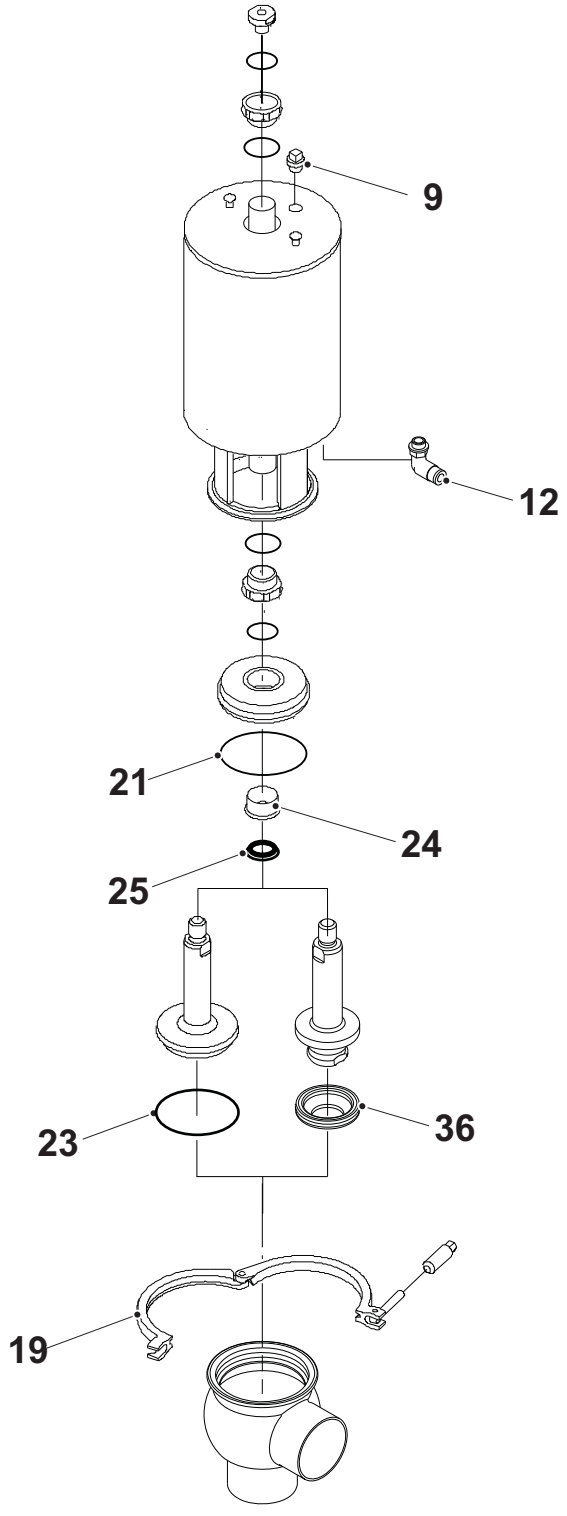

1.0 tf505002.en

DN 65 / 2½”

Spare part article No.	Description	Included parts	Pos.	Qty
6-9611-92-6504	Service kit, EPDM	O-ring Lip seal Plug seal	21 25 23	1 1 1
6-9611-92-6510	Service kit, HNBR	O-ring Lip seal Plug seal	21 25 23	1 1 1
6-9611-92-6516	Service kit, FPM	O-ring Lip seal Plug seal	21 25 23	1 1 1
6-9612-93-9305	Clamp	-	19	1
6-9613-41-4101	Plug	-	9	1
6-9611-99-1988	Air fitting	-	12	1
6-9613-12-5002	Bushing	Bushing	24	1

Alternative TR2

Spare part article No.	Description	Included parts	Pos.	Qty
6-9611-92-6563	Service kit, EPDM	O-ring Lip seal Plug seal	21 25 36	1 1 1
6-9611-92-6568	Service kit, HNBR	O-ring Lip seal Plug seal	21 25 36	1 1 1
6-9611-92-6573	Service kit, FPM	O-ring Lip seal Plug seal	21 25 36	1 1 1
6-9612-93-9318	Clamp	-	19	1
6-9613-41-4101	Plug	-	9	1
6-9611-99-4682	Air fitting	-	12	1
6-9613-12-5002	Bushing	Bushing	24	1

1.0 tf505002.en

DN 80 / 3”

Spare part article No.	Description	Included parts	Pos.	Qty
6-9611-92-6505	Service kit, EPDM	O-ring Lip seal Plug seal	21 25 23	1 1 1
6-9611-92-6511	Service kit, HNBR	O-ring Lip seal Plug seal	21 25 23	1 1 1
6-9611-92-6517	Service kit, FPM	O-ring Lip seal Plug seal	21 25 23	1 1 1
6-9612-93-9306	Clamp	-	19	1
6-9613-4141-01	Plug	-	9	1
6-9611-99-1988	Air fitting	-	12	1
6-9613-1250-02	Bushing	Bushing	24	1

Alternative TR2

Spare part article No.	Description	Included parts	Pos.	Qty
6-9611-92-6564	Service kit, EPDM	O-ring Lip seal Plug seal	21 25 36	1 1 1
6-9611-92-6569	Service kit, HNBR	O-ring Lip seal Plug seal	21 25 36	1 1 1
6-9611-92-6574	Service kit, FPM	O-ring Lip seal Plug seal	21 25 36	1 1 1
6-9612-93-9319	Clamp	-	19	1
6-9613-41-4101	Plug	-	9	1
6-9611-99-4682	Air fitting	-	12	1
6-9613-12-5002	Bushing	Bushing	24	1

1.0 tf505002.en

DN 100 / 4”

Spare part article No.	Description	Included parts	Pos.	Qty
6-9611-92-6506	Service kit, EPDM	O-ring Lip seal Plug seal	21 25 23	1 1 1
6-9611-92-6512	Service kit, HNBR	O-ring Lip seal Plug seal	21 25 23	1 1 1
6-9611-92-6518	Service kit, FPM	O-ring Lip seal Plug seal	21 25 23	1 1 1
6-9612-93-9307	Clamp	-	19	1
6-9613-41-4101	Plug	-	9	1
6-9611-99-1988	Air fitting	-	12	1
6-9613-12-5002	Bushing	Bushing	24	1

Alternative TR2

Spare part article No.	Description	Included parts	Pos.	Qty
6-9611-92-6565	Service kit, EPDM	O-ring Lip seal Plug seal	21 25 36	1 1 1
6-9611-92-6570	Service kit, HNBR	O-ring Lip seal Plug seal	21 25 36	1 1 1
6-9611-92-6575	Service kit, FPM	O-ring Lip seal Plug seal	21 25 36	1 1 1
6-9612-93-9320	Clamp	-	19	1
6-9613-41-4101	Plug	-	9	1
6-9611-99-4682	Air fitting	-	12	1
6-9613-12-5002	Bushing	Bushing	24	1

1.0 tf505002.en

Valve Long Stroke (LS)
- 38-51 mm/DN40-50/1½”-2”

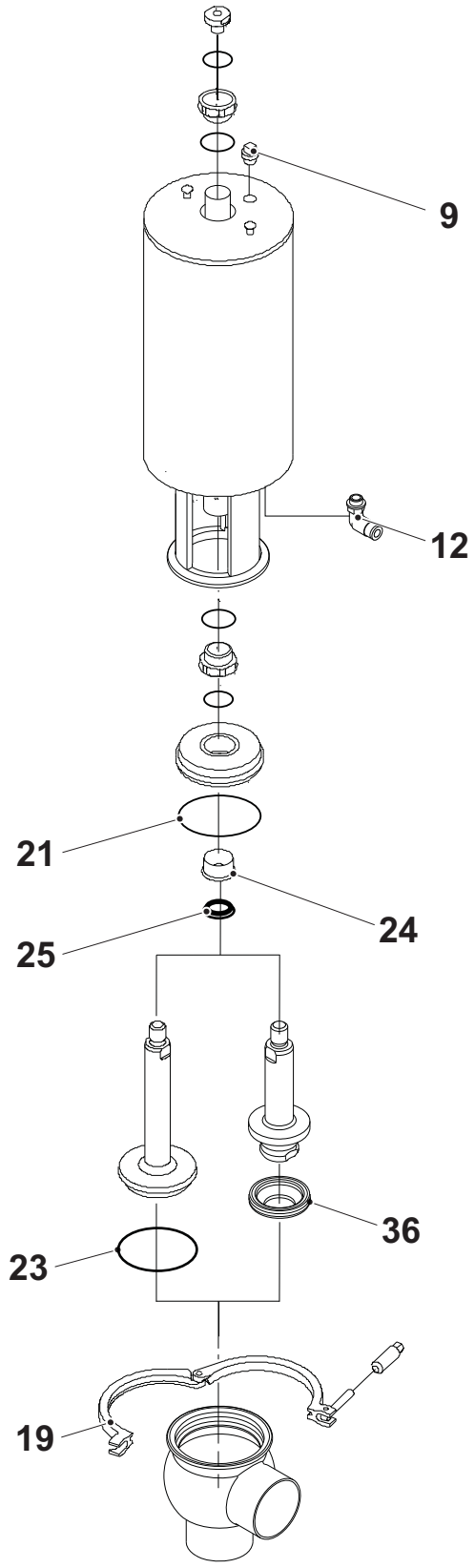

1.0 tf505002.en

DN 40 / 1½”

Spare part article No.	Description	Included parts	Pos.	Qty
6-9611-92-6502	Service kit, EPDM	O-ring Lip seal Plug seal	21 25 23	1 1 1
6-9611-92-6508	Service kit, HNBR	O-ring Lip seal Plug seal	21 25 23	1 1 1
6-9611-92-6514	Service kit, FPM	O-ring Lip seal Plug seal	21 25 23	1 1 1
6-9612-93-9303	Clamp	-	19	1
6-9612-93-9303	Plug	-	9	1
6-9611-99-1988	Air fitting (6 mm)	-	12	1
6-9613-12-5002	Bushing	Bushing	24	1

Alternative TR2

Spare part article No.	Description	Included parts	Pos.	Qty
6-9611-92-6561	Service kit, EPDM	O-ring Lip seal Plug seal	21 25 36	1 1 1
6-9611-92-6566	Service kit, HNBR	O-ring Lip seal Plug seal	21 25 36	1 1 1
6-9611-92-6571	Service kit, FPM	O-ring Lip seal Plug seal	21 25 36	1 1 1
6-9612-93-9316	Clamp	-	19	1
6-9613-41-4101	Plug	-	9	1
6-9611-99-4682	Air fitting (1/4”)	-	12	1
6-9613-12-5002	Bushing	Bushing	24	1

1.0 tf505002.en

DN 50 / 2”

Spare part article No.	Description	Included parts	Pos.	Qty
6-9611-92-6503	Service kit, EPDM	O-ring Lip seal Plug seal	21 25 23	1 1 1
6-9611-92-6509	Service kit, HNBR	O-ring Lip seal Plug seal	21 25 23	1 1 1
6-9611-92-6515	Service kit, FPM	O-ring Lip seal Plug seal	21 25 23	1 1 1
6-9612-93-9304	Clamp	-	19	1
6-9613-41-4101	Plug	-	9	1
6-9611-99-1988	Air fitting (6 mm)	-	12	1
6-9613-12-5002	Bushing	Bushing	24	1

Alternative TR2

Spare part article No.	Description	Included parts	Pos.	Qty
6-9611-92-6562	Service kit, EPDM	O-ring Lip seal Plug seal	21 25 36	1 1 1
6-9611-92-6567	Service kit, HNBR	O-ring Lip seal Plug seal	21 25 36	1 1 1
6-9611-92-6572	Service kit, FPM	O-ring Lip seal Plug seal	21 25 36	1 1 1
6-9612-93-9317	Clamp	-	19	1
6-9613-41-4101	Plug	-	9	1
6-9611-99-4682	Air fitting (1/4”)	-	12	1
6-9613-12-5002	Bushing	Bushing	24	1

1.0 tf505002.en

Valve LS - 63.5-101.6 mm/DN65-100/2½”-4”

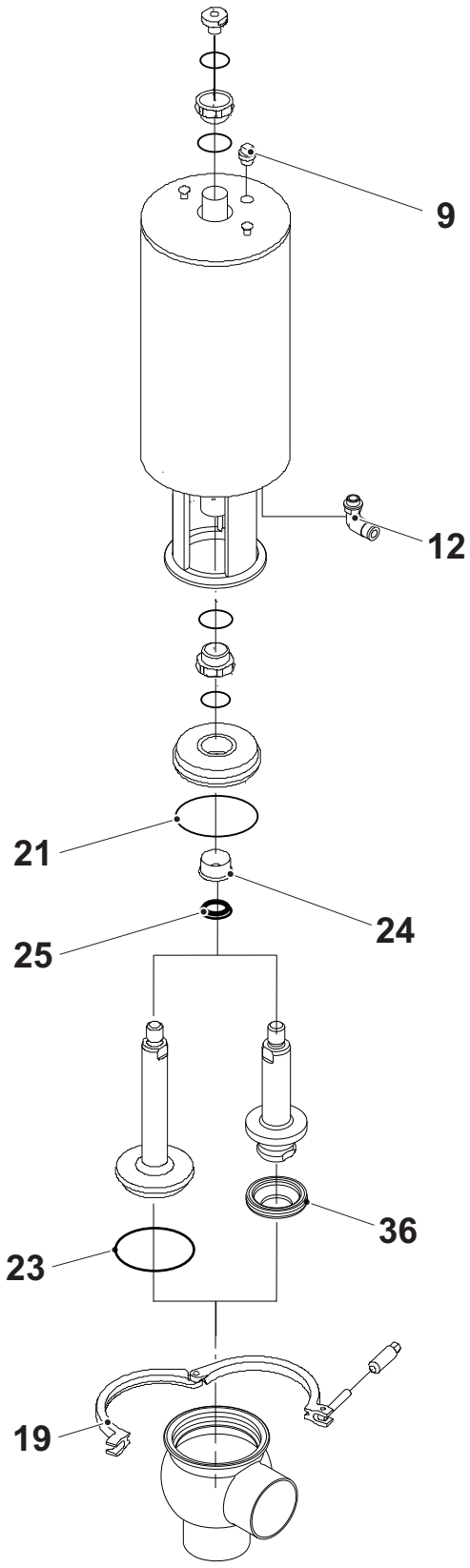

1.0 tf505002.en

DN 65 / 2½”

Spare part article No.	Description	Included parts	Pos.	Qty
6-9611-92-6504	Service kit, EPDM	O-ring Lip seal Plug seal	21 25 23	1 1 1
6-9611-92-6510	Service kit, HNBR	O-ring Lip seal Plug seal	21 25 23	1 1 1
6-9611-92-6516	Service kit, FPM	O-ring Lip seal Plug seal	21 25 23	1 1 1
6-9612-93-9305	Clamp	-	19	1
6-9613-41-4101	Plug	-	9	1
6-9611-99-1988	Air fitting (6 mm)	-	12	1
6-9613-12-5002	Bushing	Bushing	24	1

Alternative TR2

Spare part article No.	Description	Included parts	Pos.	Qty
6-9611-92-6563	Service kit, EPDM	O-ring Lip seal Plug seal	21 25 23	1 1 1
6-9611-92-6568	Service kit, HNBR	O-ring Lip seal Plug seal	21 25 23	1 1 1
6-9611-92-6573	Service kit, FPM	O-ring Lip seal Plug seal	21 25 23	1 1 1
6-9612-93-9318	Clamp	-	19	1
6-9613-41-4101	Plug	-	9	1
6-9611-99-4682	Air fitting (1/4”)	-	12	1
6-9613-12-5002	Bushing	Bushing	24	1

1.0 tf505002.en

DN 80 / 3”

Spare part article No.	Description	Included parts	Pos.	Qty
6-9611-92-6505	Service kit, EPDM	O-ring Lip seal Plug seal	21 25 23	1 1 1
6-9611-92-6511	Service kit, HNBR	O-ring Lip seal Plug seal	21 25 23	1 1 1
6-9611-92-6517	Service kit, FPM	O-ring Lip seal Plug seal	21 25 23	1 1 1
6-9612-93-9306	Clamp	-	19	1
6-9613-41-4101	Plug	-	9	1
6-9611-99-1988	Air fitting (6 mm)	-	12	1
6-9613-12-5002	Bushing	Bushing	24	1

Alternative TR2

Spare part article No.	Description	Included parts	Pos.	Qty
6-9611-92-6564	Service kit, EPDM	O-ring Lip seal Plug seal	21 25 23	1 1 1
6-9611-92-6569	Service kit, HNBR	O-ring Lip seal Plug seal	21 25 23	1 1 1
6-9611-92-6574	Service kit, FPM	O-ring Lip seal Plug seal	21 25 23	1 1 1
6-9612-93-9319	Clamp	-	19	1
6-9613-4141-01	Plug	-	9	1
6-9611-99-4682	Air fitting (1/4”)	-	12	1
6-9613-12-5002	Bushing	Bushing	24	1

1.0 tf505002.en

DN 100 / 4”

Spare part article No.	Description	Included parts	Pos.	Qty
6-9611-92-6506	Service kit, EPDM	O-ring Lip seal Plug seal	21 25 23	1 1 1
6-9611-92-6512	Service kit, HNBR	O-ring Lip seal Plug seal	21 25 23	1 1 1
6-9611-92-6518	Service kit, FPM	O-ring Lip seal Plug seal	21 25 23	1 1 1
6-9612-93-9307	Clamp	-	19	1
6-9613-41-4101	Plug	-	9	1
6-9611-99-1988	Air fitting (6 mm)	-	12	1
6-9613-12-5002	Bushing	Bushing	24	1

Alternative TR2

Spare part article No.	Description	Included parts	Pos.	Qty
6-9611-92-6565	Service kit, EPDM	O-ring Lip seal Plug seal	21 25 23	1 1 1
6-9611-92-6570	Service kit, HNBR	O-ring Lip seal Plug seal	21 25 23	1 1 1
6-9611-92-6575	Service kit, FPM	O-ring Lip seal Plug seal	21 25 23	1 1 1
6-9612-93-9320	Clamp	-	19	1
6-9613-41-4101	Plug	-	9	1
6-9611-99-4682	Air fitting (1/4”)	-	12	1
6-9613-12-5002	Bushing	Bushing	24	1

1.0 tf505002.en

Actuator - optional maintainable version 25-101.6mm/DN25-100

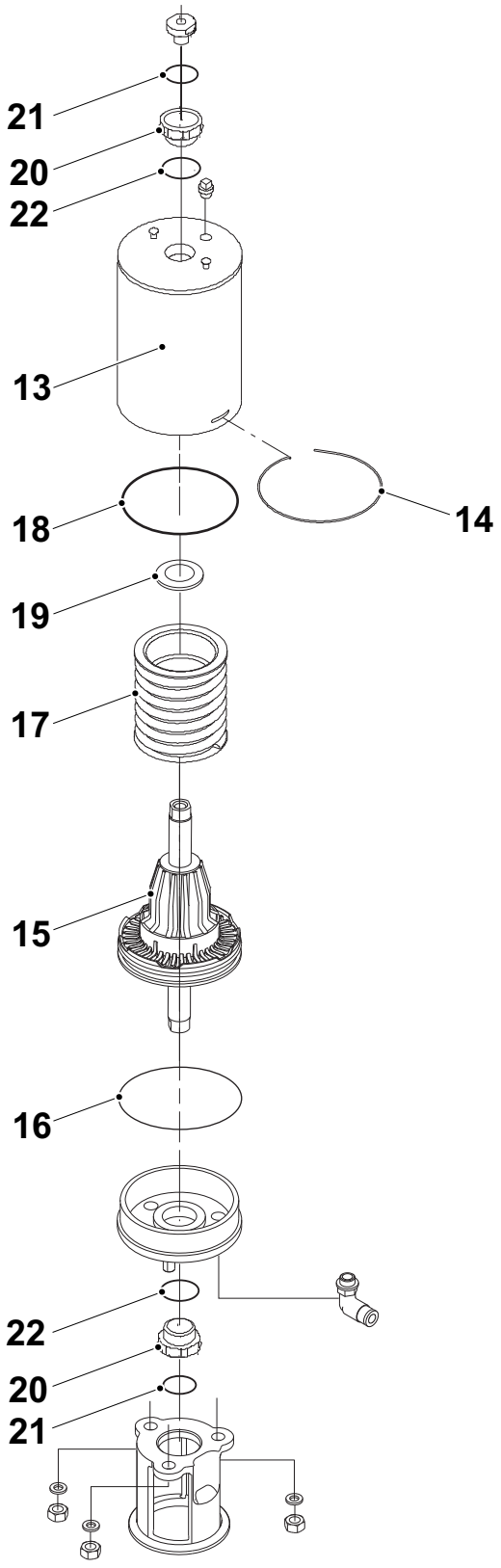

1.0 tf505002.en

DN 25 - DN 40 / 1”- 1½”

Spare part article No.	Description	Included parts	Pos.	Qty
6-9613-14-4701	Actuator, complete, maintainable (NO)	-	-	1
6-9613-14-4704	Actuator, complete, maintainable (NC)	-	-	1
6-9613-14-4707	Actuator, complete, maintainable (A/A)	-	-	1
6-9613-14-4710	Actuator, complete, maintainable (NO) (USA)	-	-	1
6-9613-14-4713	Actuator, complete, maintainable (NC) (USA)	-	-	1
6-9613-14-4716	Actuator, complete, maintainable (A/A) (USA)	-	-	1
6-9611-92-6497	Service kit, NO, NC	O-ring Bushing O-ring O-ring O-ring	18 20 21 22 16	1 2 2 2 1
6-9611-92-6519	Service kit, A/A	O-ring Bushing O-ring O-ring O-ring Support disc	18 20 21 22 16 19	1 2 2 2 1 1
6-9613-14-2501	Cylinder	-	13	1
6-9613-14-2504	Cylinder (USA)	-	13	1
6-9613-13-2201	Piston	-	15	1
6-9613-14-3201	Lock wire	-	14	1
6-9613-13-2501	Spring assembly	-	17	1

1.0 tf505002.en

DN 50 - DN 65 / 2”- 2½”

Spare part article No.	Description	Included parts	Pos.	Qty
6-9613-14-4702	Actuator, complete, maintainable (NO)	-	-	1
6-9613-14-4705	Actuator, complete, maintainable (NC)	-	-	1
6-9613-14-4708	Actuator, complete, maintainable (A/A)	-	-	1
6-9613-14-4711	Actuator, complete, maintainable (NO) (USA)	-	-	1
6-9613-14-4714	Actuator, complete, maintainable (NC) (USA)	-	-	1
6-9613-14-4717	Actuator, complete, maintainable (A/A) (USA)	-	-	1

Spare part article No.	Description	Included parts	Pos.	Qty
6-9611-92-6498	Service kit, NO, NC	O-ring Bushing O-ring O-ring O-ring	18 20 21 22 16	1 2 2 2 1
6-9611-92-6520	Service kit, A/A	O-ring Bushing O-ring O-ring O-ring Support disc	18 20 21 22 16 19	1 2 2 2 1 1
6-9613-14-2502	Cylinder	-	13	1
6-9613-14-2505	Cylinder (USA)	-	13	1
6-9613-13-2301	Piston	-	15	1
6-9613-14-3202	Lock wire	-	14	1
6-9613-13-2502	Spring assembly	-	17	1

DN 80 - DN 100 / 3”- 4”

Spare part article No.	Description	Included parts	Pos.	Qty
6-9613-14-4703	Actuator, complete, maintainable (NO)	-	-	1
6-9613-14-4706	Actuator, complete, maintainable (NC)	-	-	1
6-9613-14-4709	Actuator, complete, maintainable (A/A)	-	-	1
6-9613-14-4712	Actuator, complete, maintainable (NO) (USA)	-	-	1
6-9613-14-4715	Actuator, complete, maintainable (NC) (USA)	-	-	1
6-9613-14-4718	Actuator, complete, maintainable (A/A) (USA)	-	-	1
6-9611-92-6499	Service kit, NO, NC	O-ring Bushing O-ring O-ring O-ring	18 20 21 22 16	1 2 2 2 1
6-9611-92-6521	Service kit, A/A	O-ring Bushing O-ring O-ring O-ring Support disc	18 20 21 22 16 19	1 2 2 2 1 1
6-9613-14-2503	Cylinder	-	13	1
6-9613-14-2506	Cylinder (USA)	-	13	1
6-9613-13-2401	Piston	-	15	1
6-9613-14-3203	Lock wire	-	14	1

1.0 tf505002.en

Spare part article No.	Description	Included parts	Pos.	Qty
6-9613-13-2503	Spring assembly	-	17	1

NO = Normally Open
NC = Normally Closed
A/A = Air / Air, pneumatic upward and downward movement.

1.0 tf505002.en

Actuator - standard version 25-101.6mm/DN25-100

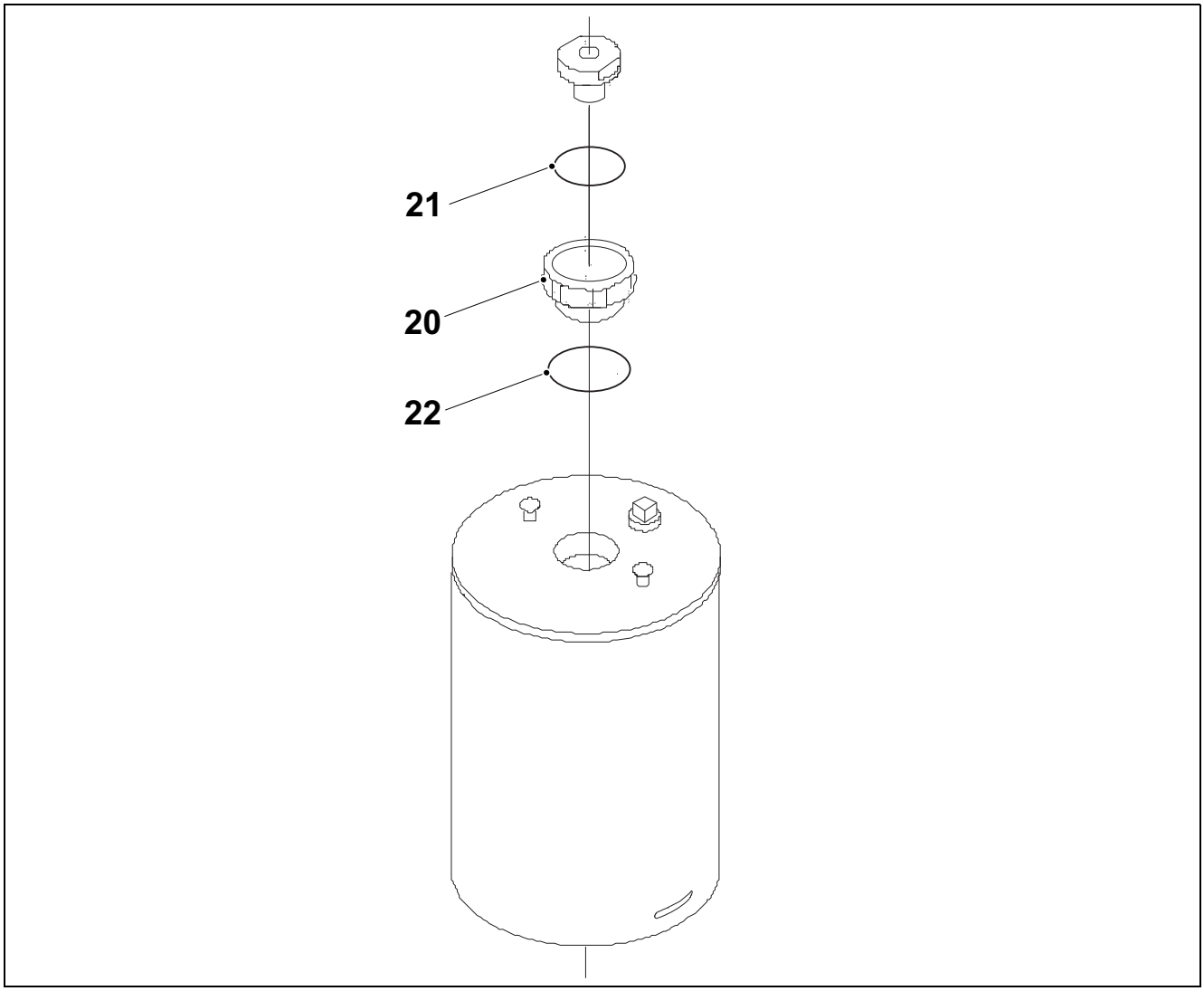

1.0 tf505002.en

DN 25 - DN 40 / 1”- 1½”

Spare part article No.	Description	Included parts	Pos.	Qty
6-9613-15-4801	Actuator, complete (NO)	-	-	1
6-9613-15-4806	Actuator, complete (NC)	-	-	1
6-9613-15-4811	Actuator, complete (A/A)	-	-	1
6-9613-15-4831	Actuator, complete (NO) (USA)	-	-	1
6-9613-15-4836	Actuator, complete (NC) (USA)	-	-	1
6-9613-15-4841	Actuator, complete (A/A) (USA)	-	-	1
6-9611-92-6500	Service kit	Bushing O-ring O-ring	20 21 22	2 2 2

DN 50 - 2”

Spare part article No.	Description	Included parts	Pos.	Qty
6-9613-15-4802	Actuator, complete (NO)	-	-	1
6-9613-15-4807	Actuator, complete (NC)	-	-	1
6-9613-15-4812	Actuator, complete (A/A)	-	-	1
6-9613-15-4832	Actuator, complete (NO) (USA)	-	-	1
6-9613-15-4837	Actuator, complete (NC) (USA)	-	-	1
6-9613-15-4837	Actuator, complete (A/A) (USA)	-	-	1
6-9611-92-6500	Service kit	Bushing O-ring O-ring	20 21 22	2 2 2

DN 65 - 2½”

Spare part article No.	Description	Included parts	Pos.	Qty
6-9613-15-4803	Actuator, complete (NO)	-	-	1
6-9613-15-4808	Actuator, complete (NC)	-	-	1
6-9613-15-4813	Actuator, complete (A/A)	-	-	1
6-9613-15-4833	Actuator, complete (NO) (USA)	-	-	1
6-9613-15-4838	Actuator, complete (NC) (USA)	-	-	1
6-9613-15-4843	Actuator, complete (A/A) (USA)	-	-	1
6-9611-92-6500	Service kit	Bushing O-ring O-ring	20 21 22	2 2 2

1.0 tf505002.en

DN 80 - 3”

Spare part article No.	Description	Included parts	Pos.	Qty
6-9613-15-4804	Actuator, complete (NO)	-	-	1
6-9613-15-4809	Actuator, complete (NC)	-	-	1
6-9613-15-4814	Actuator, complete (A/A)	-	-	1
6-9613-15-4834	Actuator, complete (NO) (USA)	-	-	1
6-9613-15-4839	Actuator, complete (NC) (USA)	-	-	1
6-9613-15-4844	Actuator, complete (A/A) (USA)	-	-	1
6-9611-92-6500	Service kit	Bushing O-ring O-ring	20 21 22	2 2 2

DN 100 - 4”

Spare part article No.	Description	Included parts	Pos.	Qty
6-9613-15-4805	Actuator, complete (NO)	-	-	1
6-9613-15-4810	Actuator, complete (NC)	-	-	1
6-9613-15-4815	Actuator, complete (A/A)	-	-	1
6-9613-15-4835	Actuator, complete (NO) (USA)	-	-	1
6-9613-15-4840	Actuator, complete (NC) (USA)	-	-	1
6-9613-15-4845	Actuator, complete (A/A) (USA)	-	-	1
6-9611-92-6500	Service kit	Bushing O-ring O-ring	20 21 22	2 2 2

1.0 tf505002.en

Actuator Two Step (TS) - maintainable version 38-101.6mm/DN40-100

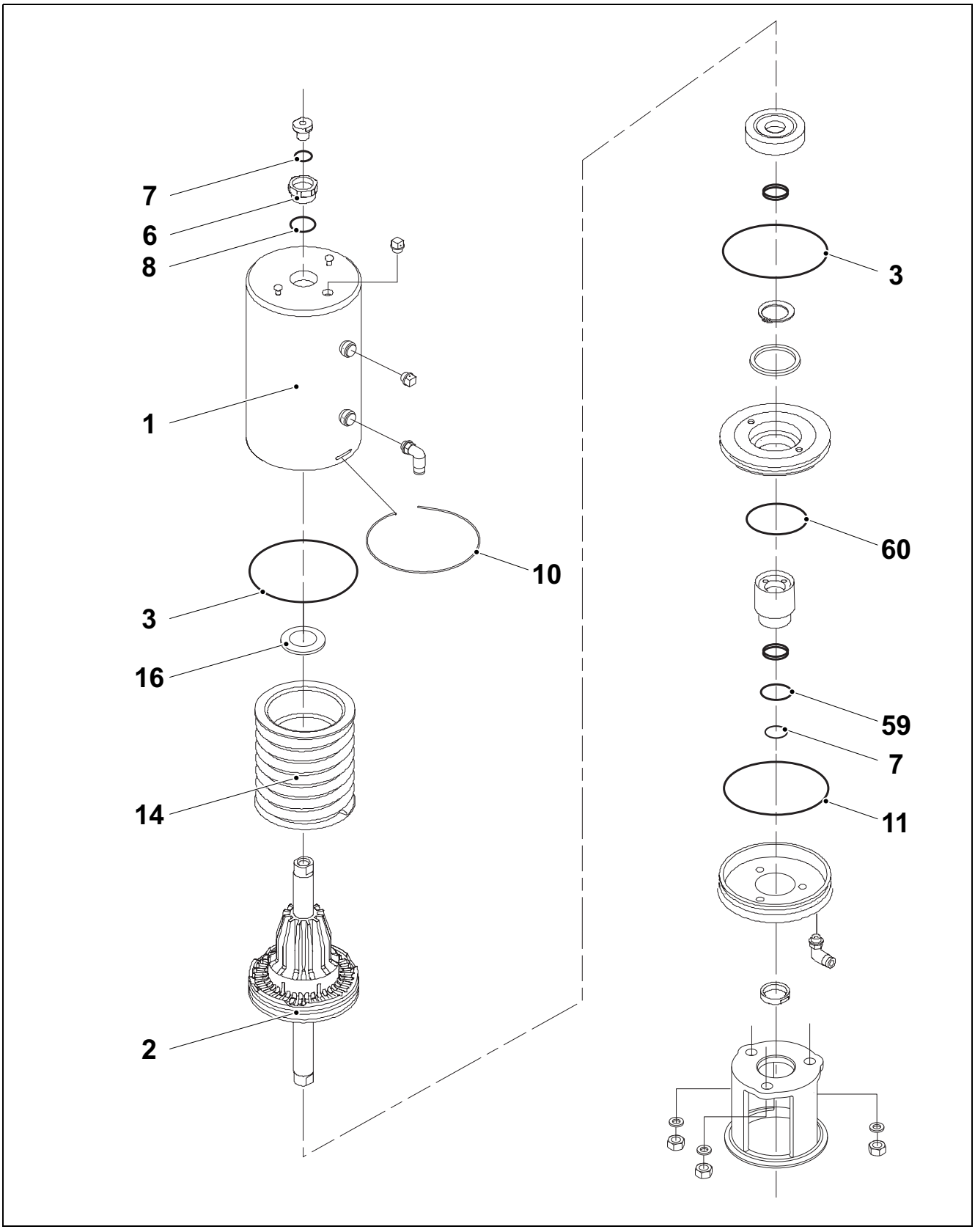

1.0 tf505002.en

DN 40

Spare part article No.	Description	Included parts	Pos.	Qty
6-9613-16-8701	Actuator, complete, maintainable (NC)	-	-	1
6-9611-92-6738	Service kit	O-ring Bushing O-ring O-ring O-ring Support disc O-ring O-ring	3 6 7 8 11 16 59 60	2 1 2 1 1 1 1 1
6-9613-16-7705	Cylinder	-	1	1
6-9613-13-2304	Piston	-	2	1
6-9613-14-3202	Lock wire	-	10	1
6-9613-13-2502	Spring assembly	-	14	1

DN 50 - DN 65

Spare part article No.	Description	Included parts	Pos.	Qty
6-9613-16-8702	Actuator, complete, maintainable (NC)	-	-	1
6-9611-92-6738	Service kit	O-ring Bushing O-ring O-ring O-ring Support disc O-ring O-ring	3 6 7 8 11 16 59 60	2 1 2 1 1 1 1 1
6-9613-16-7705	Cylinder	-	1	1
6-9613-13-2304	Piston	-	2	1
6-9613-14-3202	Lock wire	-	10	1
6-9613-13-2502	Spring assembly	-	14	1

1.0 tf505002.en

DN 80 - DN 100

Spare part article No.	Description	Included parts	Pos.	Qty
6-9613-16-8703	Actuator, complete, maintainable (NC)	-	-	1
6-9611-92-6739	Service kit	O-ring Bushing O-ring O-ring O-ring Support disc O-ring O-ring	3 6 7 8 11 16 59 60	2 1 2 1 1 1 1 1
6-9613-16-7706	Cylinder	-	1	1
6-9613-13-2405	Piston	-	2	1
6-9613-14-3203	Lock wire	-	10	1
6-9613-13-2503	Spring assembly	-	14	1

NO = Normally Open
NC = Normally Closed
A/A = Air / Air, pneumatic upward and downward movement.

1.0 tf505002.en

Tools

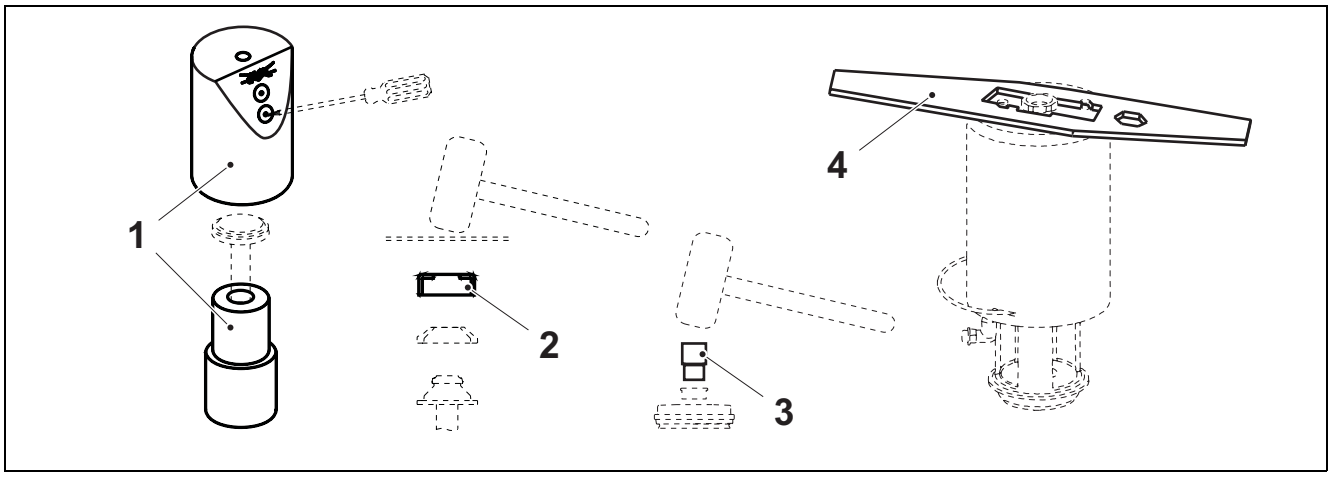

Tool article No.	Size	Description	Pos.	Qty
6-9613-17-2901	DN/OD38	Mounting tool, not for aseptic valve	1	1
6-9613-17-2902	DN/OD51-63.5			
6-9613-17-2903	DN/OD76.1-101.6			
6-9614-06-0001	DN/OD25	Aseptic valve, mounting tool		
6-9614-06-0002	DN/OD38			
6-9614-06-0003	DN/OD51-63.5			
6-9614-06-0004	DN/OD76.1-101.6			
6-9613-16-3206	DN/OD25	Mounting tool for TR2 plugs	2	1
6-9613-16-3201	DN/OD40			
6-9613-16-3202	DN/OD50			
6-9613-16-3203	DN/OD65			
6-9613-16-3204	DN/OD80			
6-9613-16-3205	DN/OD100			
6-9613-16-0901	DN/OD25-101.6	Bushing tool	3	1
6-3135-30-2191	DN/OD25-63.5	Actuator dismantling tool	4	1
6-9612-45-4001	DN/OD76.1-101.6			

1.0 tf505002.en

This page intentionally left blank

1.0 tf505002.en

Tetra Pak

Maintenance & Spare Parts

Unique Single Seat Valve, Standard

(Alfa Laval Flow)
SSV Change-over Valves



1.0 1221122-0101.fro

Tetra Pak

Doc No. 1221122-0101

Unique Single Seat Valve, Standard

SSV Change-over Valves

This document refers to components specified in Technical Manual, on Maintenance & Spare Parts CD/DVD or on Tetra Pak Intranet.

1.0 1221122-0101.fro

Version 04 Issue 2013-03

Doc No. 1221122-0101

Tetra Pak

Tetra Pak Processing Systems AB

Table of contents

General 1

Function description. 1

Maintenance 2

Pre-use check 2

Valve 3

Disassemble valve 3

Reassemble valve. 5

Plug seal replacement 6

Actuator, optional maintainable version 9

Change spare part kit 9

Actuator, both standard and optional maintainable . . . . . version 11

Actuator bushing replacement 11

Cleaning 12

Troubleshooting 14

(Cont'd)

(Cont'd)

Spare parts 15

Valve - 25-51 mm/DN25-50/1½”-2” 15

Valve - 63.5-101.6 mm/DN65-100/2½”-4” 19

Valve Long Stroke (LS) - 38-51 mm/DN40-50/1½”-2” . . . 22

Valve Long Stroke (LS) . . . . . .- 63.5-101.6 mm/DN65-100/2½”-4” 25

Actuator - optional maintainable version 25-101.6mm/DN25-100 30

Actuator - standard version 25-101.6mm/DN25-100 34

Actuator Two Step (TS) - maintainable version 38-101.6mm/DN40-100 37

Tools 41

General

Function description

The Unique Single Seat Valve, change-over version, is an air-operated seat valve in a sanitary and flexible design giving a wide field of applications, e.g. as a change-over valve with three to five ports.

The valve is remote-controlled by means of compressed air. To ensure a high degree of flexibility the valve seat between the two bodies in the change-over version is loose. To reduce the wear of sealings there is a controlled compression of seals by metal to metal contact. The actuator is connected to the valve body using a yoke and all components are assembled with clamp rings.

1.0 tf505003.en

Maintenance

Pre-use check

WARNING!

Risk of injury!
Never service the valve when it is hot.
Never service the valve with valve and pipelines under pressure.
Never stick your fingers through the valve ports if the actuator is supplied with compressed air.
Never touch the clip assembly or the actuator piston rod if the actuator is supplied with compressed air.
Always release the compressed air after use.
Always remove the CIP connections, if supplied, before service.

Note! Check the valve for smooth operation after service.

a) Supply compressed air to the actuator.

b) Operate the valve several times to ensure that it operates smoothly.

Note! Pay special attention to the warnings!

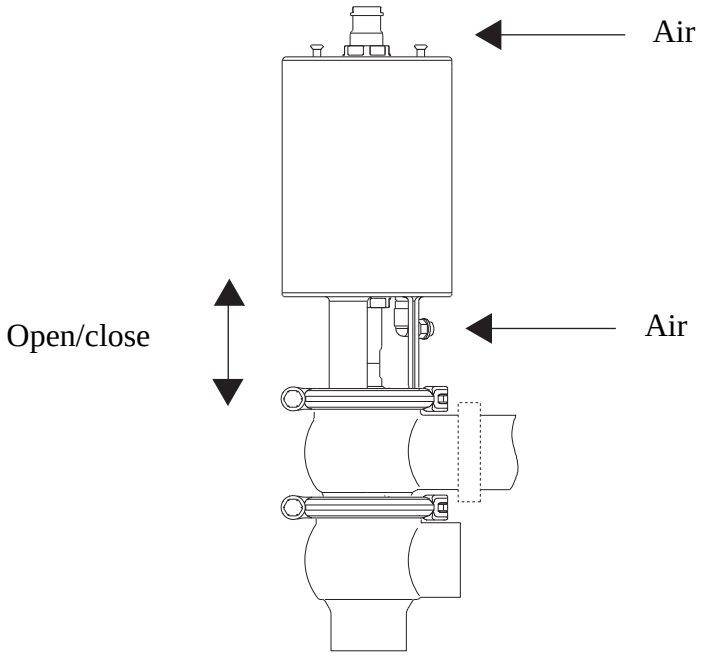

1.0 tf505003.en

Valve

Disassemble valve

WARNING!

Risk of injury!
- Never service the valve when it is hot.
- Never service the valve with valve and pipelines under pressure.
- Make sure that the pipeline is drained and free from media before servicing the valve.
- The valve and pipelines must **never** be pressurised when serviced.
- Never stick your fingers through the valve ports if the actuator is supplied with compressed air.
- Never touch the clip assembly or the actuator piston rod if the actuator is supplied with compressed air.
- Always release compressed air after use.

1.0 tf505003.en

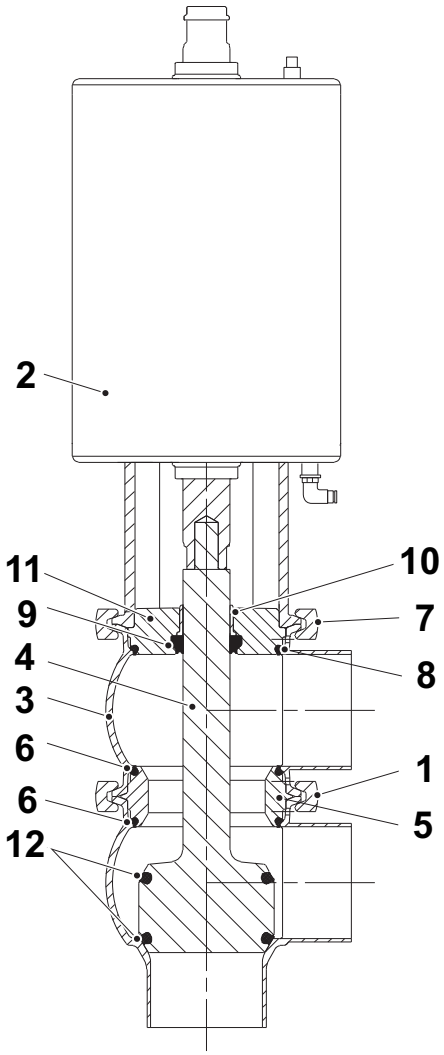

1 Lower Clamp
2 Actuator
3 Upper valve body
4 Valve plug
5 Seat
6 O-ring
7 Upper clamp
8 O-ring
9 Lip seal
10 Bushing
11 Bonnet
12 Plug seal

(Cont'd)

(Cont'd)

Note! NO: Normally open
NC: Normally closed
A/A: Air/Air activated

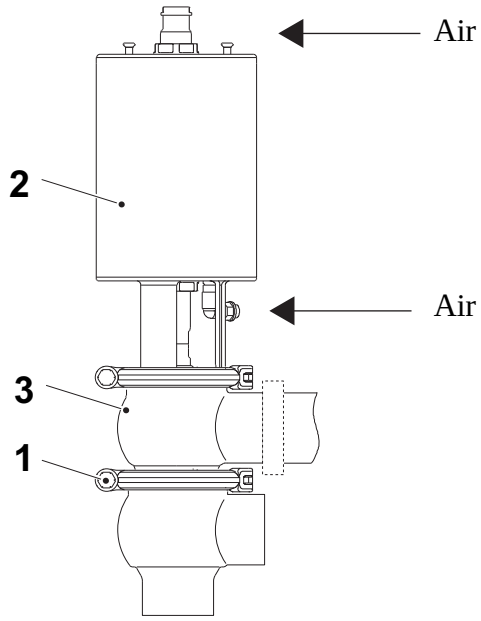

a) **NC**: Supply compressed air to the actuator.
b) Loosen and remove lower clamp (1).
c) **NC**: Release compressed air.
d) Lift away the actuator (2) and upper valve body (3).

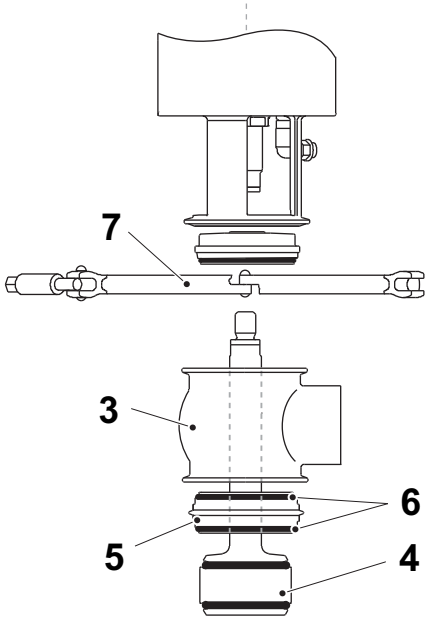

(Cont'd)

1.0 tf505003.en

(Cont'd)

a) **NO**: Supply compressed air to the actuator.
b) Unscrew and remove valve plug (4).
c) **NO**: Release compressed air.
d) Remove seat (5) and O-rings (6).
e) Loosen and remove upper clamp (7).
f) Remove upper valve body (3).

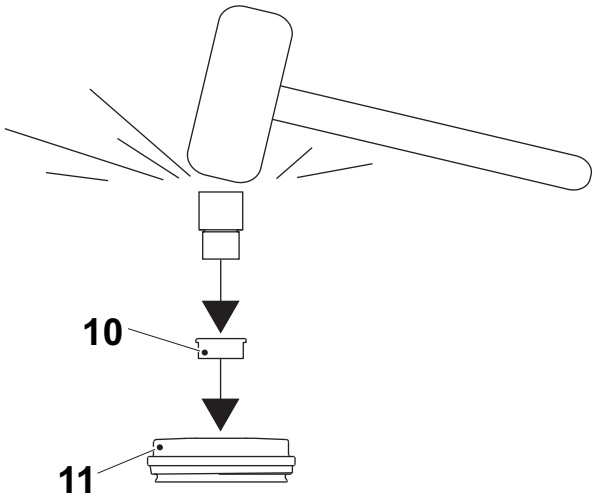

g) Remove O-ring (8), lip seal (9) and bushing (10) in bonnet (11).

Note! Use bushing tool and rubber mallet.

1.0 tf505003.en

Reassemble valve

Reassemble in the reverse order to disassemble of the valve.

Note! Lubricate O-rings (6), (8) and lip seal (9) with Klüber Paraliq GTE 703.

Plug seal replacement

Elastomer plug seal replacement

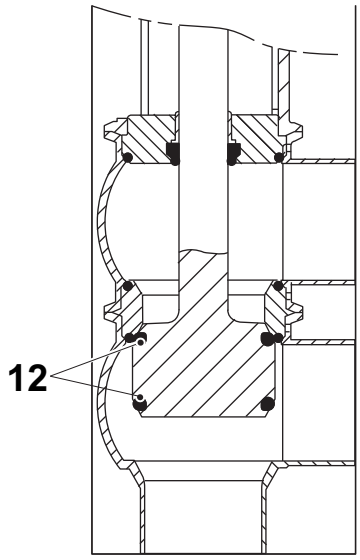

a) Remove old plug seals (12) using a knife, screwdriver or similar. Be careful not to damage metal parts.

b) Pre-mount plug seals (12) without pressing it into the groove

With mounting tool

c) Put the plug (4) in the lower part of the mounting tool (30).

d) Put the upper part of mounting tool (31) over the plug and press down.

e) The seals (12) will be visible in the bores (32). Very carefully insert a narrow screwdriver just under the seal (12).

f) Carefully press it down, in order to release compressed air behind the seal (12).

(Cont'd)

1.0 tf505003.en

(Cont'd)

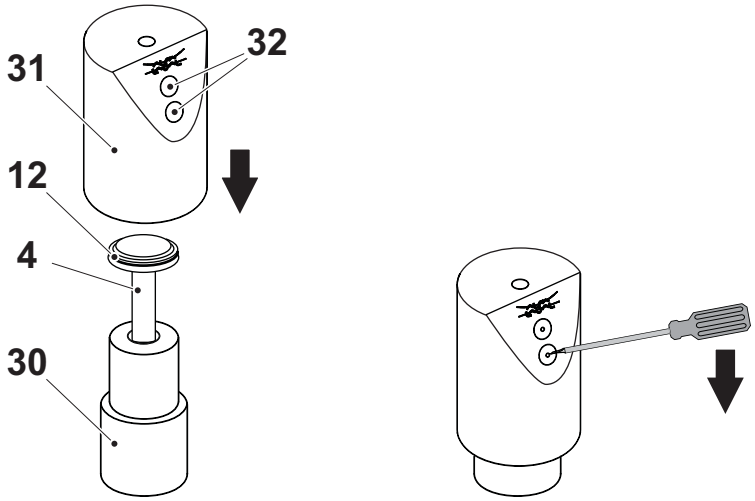

4 Plug
12 Plug seal
30 Mounting tool lower part
31 Mounting tool upper part
32 Bores

1.0 tf505003.en

Without mounting tool

g) Squeeze plug seals (12) into the groove using opposite pressure points.

h) Release compressed air behind plug seals (12).

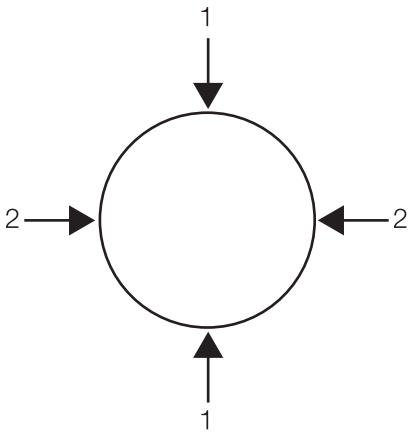

(Cont'd)

(Cont'd)

TR2 seat ring replacement

a) Place the plug element on a firm support.

b) Using a utility knife, partially and carefully cut through the upper ring portion of the TR2 plug avoiding contact with stainless steel stem.

c) Force apart both cut ends of the plug for removal from stem.

d) TR2 plugs are installed by applying uniform pressure on all sides. (Pressure can be applied using the seat assembly tool.)

e) Using a piece of metal and a rubber mallet, place a precise tab to make the TR2 plug snap on to the stem. Reverse the tool and tab again to secure proper fit.

f) Examine seat assembly in one hand - rotate the TR2 plug. (For proper CIP cleaning the TR2 plug should turn freely on the stem.)

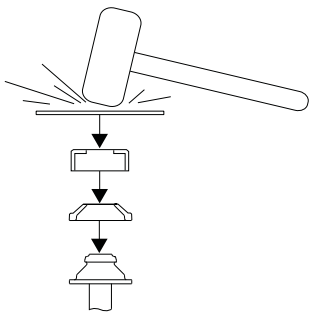

1.0 tf505003.en

Actuator, optional maintainable version

Change spare part kit

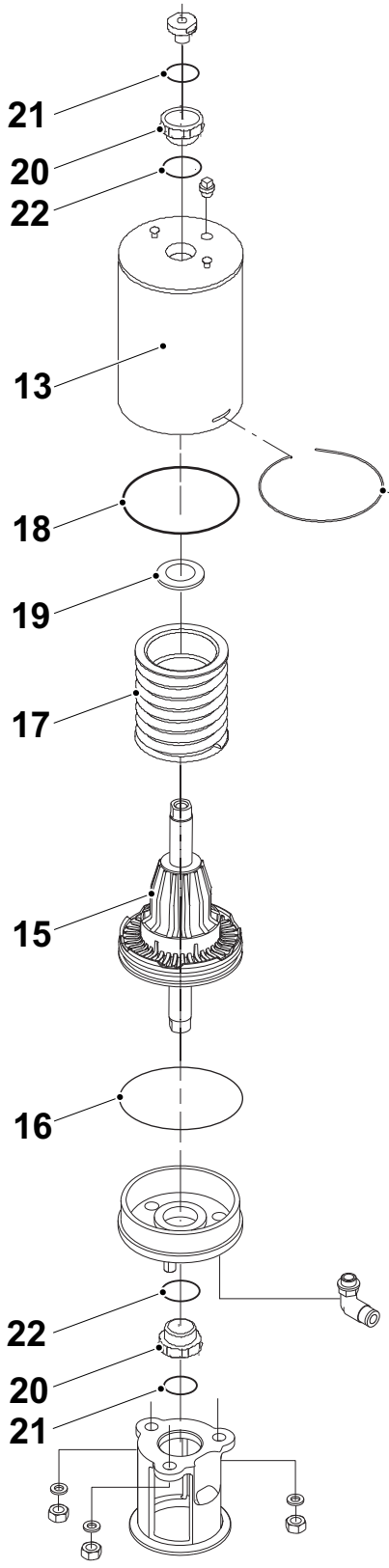

13 Cylinder
14 Lock wire
15 Piston
16 O-ring
17 Spring assembly
18 O-ring
19 Support disc
20 Bushing
21 O-ring
22 O-ring

1.0 tf505003.en

WARNING!

Dismantling/Assembly

Risk of injury!

- Make sure that the pipelines are drained and free from media before servicing the valve!
- **Never** service the valve when it is hot!
- **Never** service the valve with valve and pipelines under pressure.
- **Always** release compressed air after use.
- **Never** touch the clip assembly or the actuator piston rod if the actuator is supplied with compressed air.
- **Never** put your fingers through the valve ports if the actuator is supplied with compressed air!

Note! NC = Normally closed.

NO = Normally open.

A/A = Air/air activated

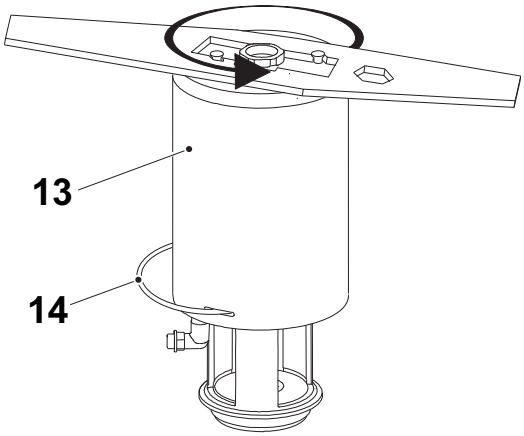

1.0 tf505003.en

a) Rotate cylinder (13).
b) Remove lock wire (14) and pull away cylinder (13).
c) Unscrew nuts and remove yoke.
d) Unscrew top and bottom bushings (20).
e) Remove piston (15) with O-ring (16) and spring assembly (17).
f) Remove O-ring (18) and support disc (19).

Note! The A/A actuator has no spring assembly.

Assembly

Assembly of the actuator is made in the reverse order to dismantling.

Note! Lubricate O-rings (16) and (18) with Molykote Longterm 2 plus before fitting.

Actuator, both standard and optional maintainable version

Actuator bushing replacement

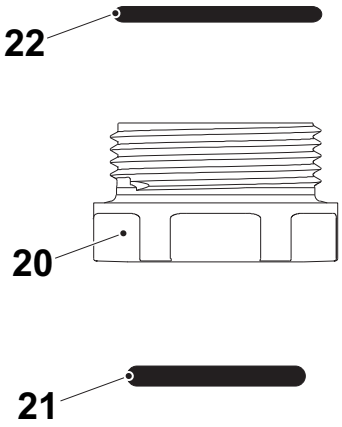

a) Unscrew and remove top and bottom bushings (20) with O-rings (21) and (22).

b) Lubricate O-rings (21) and (22) with Molykote Longterm 2 plus before fitting.

c) Fit bushings (20) and O-rings (21) and (22). Be careful not to overtighten.

1.0 tf505003.en

Cleaning

DANGER! **Risk of injury!**
Always handle lye and acid with great care!
Always use rubber gloves!
Always use protective goggles!

WARNING! **Risk of burning!**
Never touch the pump or the pipelines when sterilizing.

WARNING! **Risk of injury!**
Always rinse well with clean water after the cleaning.

Note! Clean the plug and seats correctly

Note! Lift and lower valve plug momentarily!

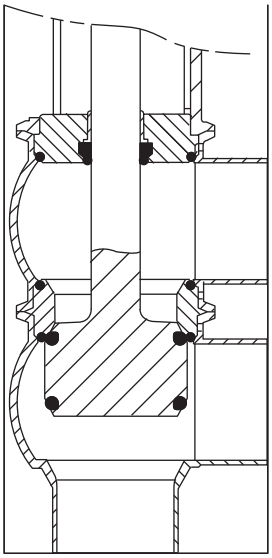

1.0 tf505003.en

Note! The cleaning agents must be stored/discharged in accordance with current rules/directives.

Note! Avoid excessive concentration of the cleaning agent, dose gradually.

Note! Adjust the cleaning flow to the process.

Examples of cleaning agents:

(Cont'd)

(Cont'd)

Use clean water, free from chlorides.

– 1% by weight NaOH at 70°C.

1 kg NaOH + 100 litre water = Cleaning agent

2.2 litre 33% NaOH + 100 litre water = Cleaning agent

– 0.5% by weight HNO_3 at 70°C.

0.7 litre 53% HNO3 + 100 litre water = Cleaning agent

NaOH = Caustic soda
HNO_3= Nitric acid

1.0 tf505003.en

Troubleshooting

Problem	Cause	Action
External product leakage	- Worn or product affected lipseal and/or O-ring	- Replace the seals - Replace with seals of a different rubber grade
Internal product leakage	- Worn or product affected plug seal - Product deposits on the seat and/or plug - Product pressure exceeds actuator specification	- Replace the seal - Frequent cleaning - Replace with a high pressure actuator - Use auxiliary air on the spring side - Reduce product pressure
Water hammer	- The flow direction is the same as the closing direction	- The flow direction should be against the closing direction - Throttle air release of solenoid in top unit
The valve does not open/close	- Product pressure exceeds actuator specification	- Replace with a high pressure actuator - Use auxiliary air on the spring side - Reduce product pressure

1.0 tf505003.en

Spare parts

Valve - 25-51 mm/DN25-50/1½”-2”

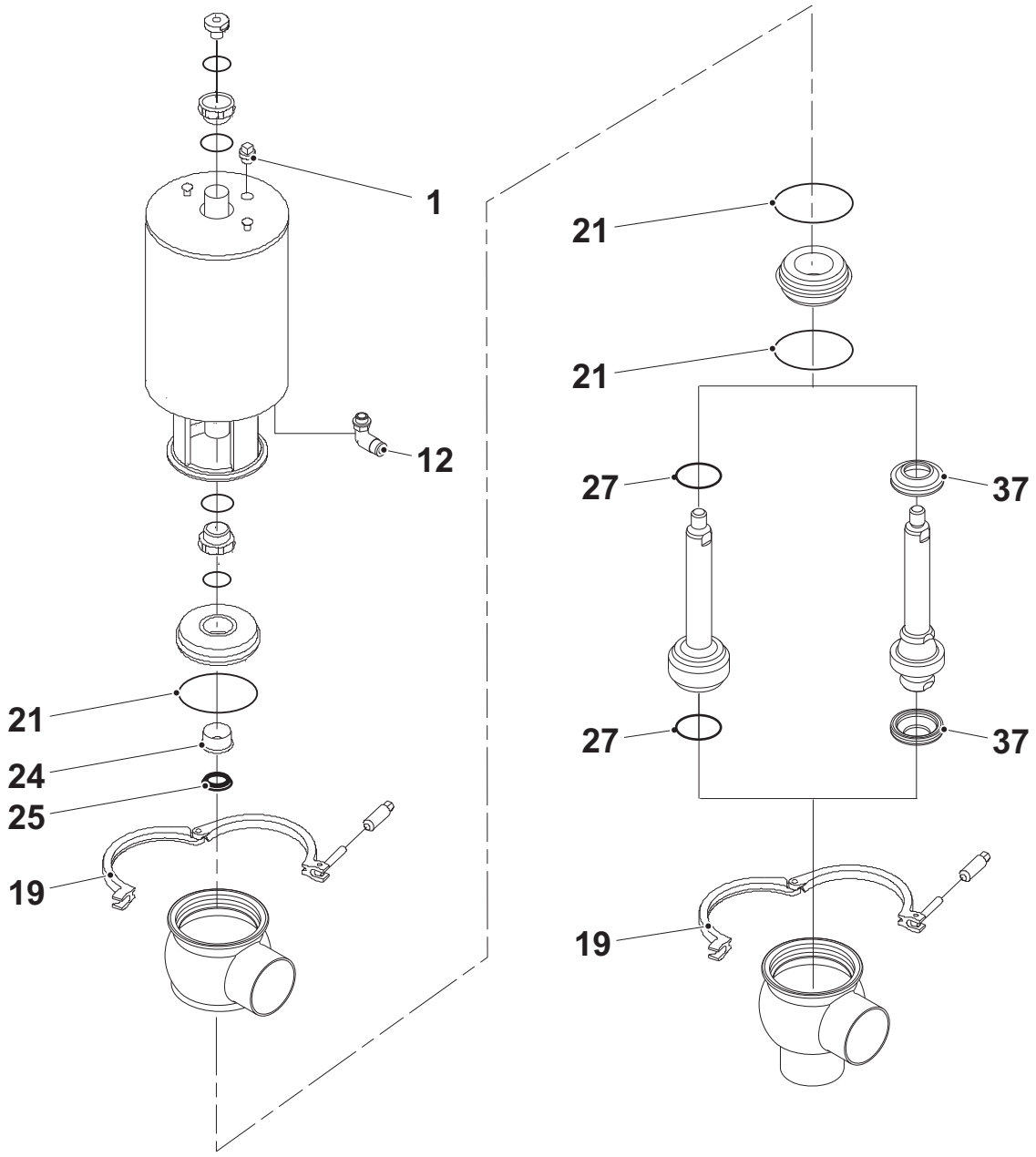

1.0 tf505004.en

DN 25 / 1”

Spare part article No.	Description	Included parts	Pos.	Qty
6-9611-92-6579	Service kit, EPDM	O-ring Lip seal Plug seal	21 25 27	3 1 2
6-9611-92-6585	Service kit, HNBR	O-ring Lip seal Plug seal	21 25 27	3 1 2
6-9611-92-6591	Service kit, FPM	O-ring Lip seal Plug seal	21 25 27	3 1 2
6-9612-93-9303	Clamp	-	19	2
6-9613-41-4101	Plug	-	1	1
6-9611-99-1988	Air fitting (6 mm)	-	12	1
6-9613-1250-02	Bushing	Bushing	24	1

1.0 tf505004.en

DN 40 / 1½”

Spare part article No.	Description	Included parts	Pos.	Qty
6-9611-92-6580	Service kit, EPDM	O-ring Lip seal Plug seal	21 25 27	3 1 2
6-9611-92-6586	Service kit, HNBR	O-ring Lip seal Plug seal	21 25 27	3 1 2
6-9611-92-6592	Service kit, FPM	O-ring Lip seal Plug seal	21 25 27	3 1 2
6-9612-93-9303	Clamp	-	19	2
6-9613-41-4101	Plug	-	1	1
6-9611-99-1988	Air fitting (6 mm)	-	12	1
6-9613-12-5002	Bushing	Bushing	24	1

Alternative TR2

Spare part article No.	Description	Included parts	Pos.	Qty
6-9611-92-6633	Service kit, EPDM	O-ring Lip seal Plug seal	21 25 37	3 1 2
6-9611-92-6638	Service kit, HNBR	O-ring Lip seal Plug seal	21 25 37	3 1 2
6-9611-92-6643	Service kit, FPM	O-ring Lip seal Plug seal	21 25 37	3 1 2
6-9612-93-9316	Clamp	-	19	2
6-9613-41-4101	Plug	-	1	1
6-9611-99-4682	Air fitting($^{1}/_{4}$ “)	-	12	1
6-9613-12-5002	Bushing	Bushing	24	1

1.0 tf505004.en

DN 50 / 2”

Spare part article No.	Description	Included parts	Pos.	Qty
6-9611-92-6581	Service kit, EPDM	O-ring Lip seal Plug seal	21 25 27	3 1 2
6-9611-92-6587	Service kit, HNBR	O-ring Lip seal Plug seal	21 25 27	3 1 2
6-9611-92-6593	Service kit, FPM	O-ring Lip seal Plug seal	21 25 27	3 1 2
6-9612-93-9304	Clamp	-	19	2
6-9613-41-4101	Plug	-	1	1
6-9611-99-1988	Air fitting (6 mm)	-	12	1
6-9613-12-5002	Bushing	Bushing	24	1

Alternative TR2

Spare part article No.	Description	Included parts	Pos.	Qty
6-9611-92-6634	Service kit, EPDM	O-ring Lip seal Plug seal	21 25 37	3 1 2
6-9611-92-6639	Service kit, HNBR	O-ring Lip seal Plug seal	21 25 37	3 1 2
6-9611-92-6644	Service kit, FPM	O-ring Lip seal Plug seal	21 25 37	3 1 2
6-9612-93-9317	Clamp	-	19	2
6-9613-41-4101	Plug	-	1	1
6-9611-99-4682	Air fitting ($^1/_4$ “)	-	12	1
6-9613-12-5002	Bushing	Bushing	24	1

1.0 tf505004.en

Valve - 63.5-101.6 mm/DN65-100/2½”-4”

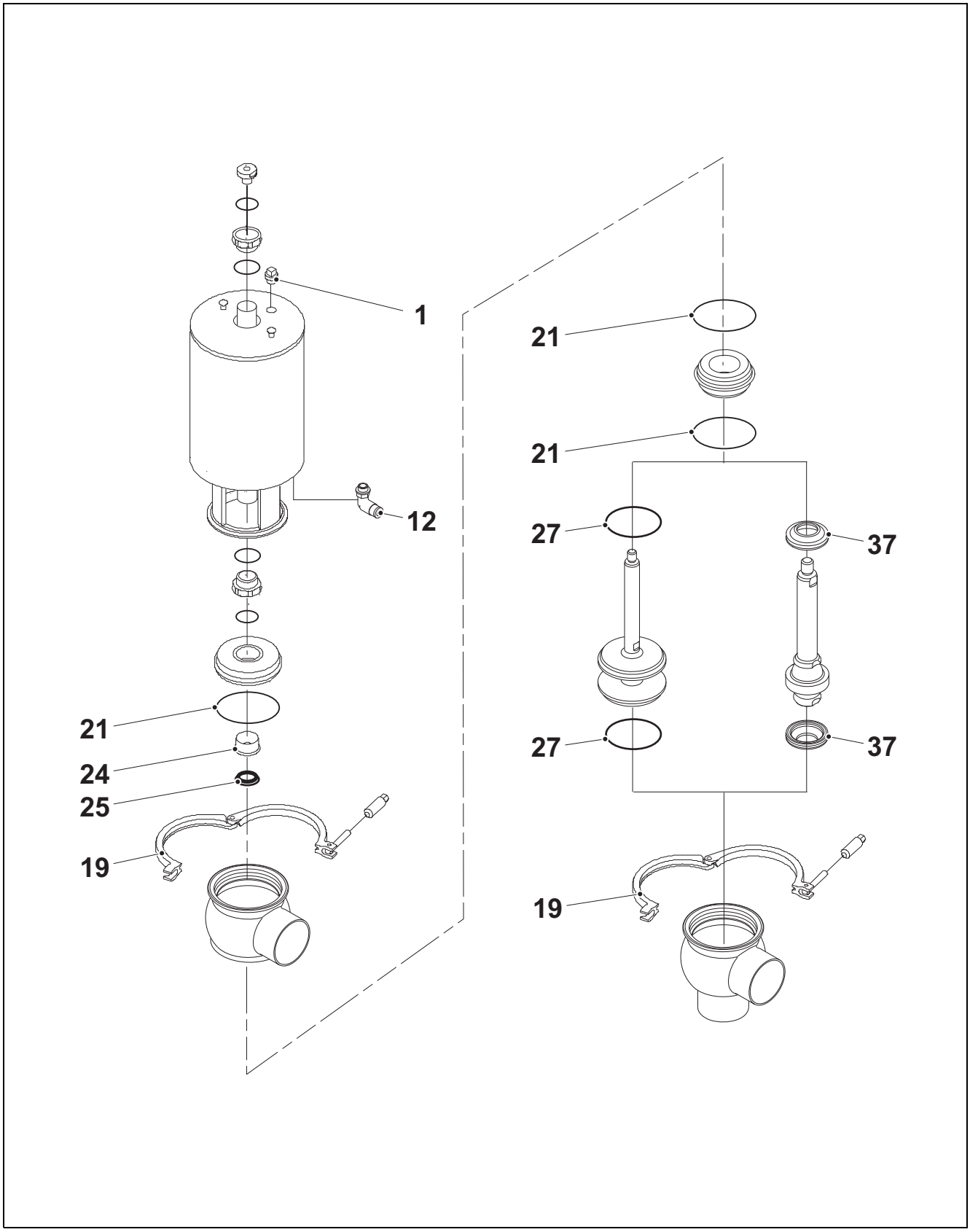

1.0 tf505004.en

DN 65 / 2½”

Spare part article No.	Description	Included parts	Pos.	Qty
6-9611-92-6582	Service kit, EPDM	O-ring Lip seal Plug seal	21 25 27	3 1 2
6-9611-92-6588	Service kit, HNBR	O-ring Lip seal Plug seal	21 25 27	3 1 2
6-9611-92-6594	Service kit, FPM	O-ring Lip seal Plug seal	21 25 27	3 1 2
6-9612-93-9305	Clamp	-	19	2
6-9613-41-4101	Plug	-	1	1
6-9611-99-1988	Air fitting (6 mm)	-	12	1
6-9613-12-5002	Bushing	Bushing	24	1

Alternative TR2

Spare part article No.	Description	Included parts	Pos.	Qty
6-9611-92-6635	Service kit, EPDM	O-ring Lip seal Plug seal	21 25 37	3 1 2
6-9611-92-6640	Service kit, HNBR	O-ring Lip seal Plug seal	21 25 37	3 1 2
6-9611-92-6645	Service kit, FPM	O-ring Lip seal Plug seal	21 25 37	3 1 2
6-9612-93-9318	Clamp	-	19	2
6-9613-41-4101	Plug	-	1	1
6-9611-99-4682	Air fitting ($^1/_4$ “)	-	12	1
6-9613-12-5002	Bushing	Bushing	24	1

1.0 tf505004.en

DN 80 / 3”

Spare part article No.	Description	Included parts	Pos.	Qty
6-9611-92-6583	Service kit, EPDM	O-ring Lip seal Plug seal	21 25 27	3 1 2
6-9611-92-6589	Service kit, HNBR	O-ring Lip seal Plug seal	21 25 27	3 1 2
6-9611-92-6595	Service kit, FPM	O-ring Lip seal Plug seal	21 25 27	3 1 2
6-9612-93-9306	Clamp	-	19	2
6-9613-41-4101	Plug	-	1	1
6-9611-99-1988	Air fitting (6 mm)	-	12	1
6-9613-12-5002	Bushing	Bushing	24	1

Alternative TR2

Spare part article No.	Description	Included parts	Pos.	Qty
6-9611-92-6636	Service kit, EPDM	O-ring Lip seal Plug seal	21 25 37	3 1 2
6-9611-92-6641	Service kit, HNBR	O-ring Lip seal Plug seal	21 25 37	3 1 2
6-9611-92-6646	Service kit, FPM	O-ring Lip seal Plug seal	21 25 37	3 1 2
6-9612-93-9319	Clamp	-	19	2
6-9613-41-4101	Plug	-	1	1
6-9611-99-4682	Air fitting ($^{1}/_{4}$ “)	-	12	1
6-9613-12-5002	Bushing	Bushing	24	1

1.0 tf505004.en

DN 100 / 4”

Spare part article No.	Description	Included parts	Pos.	Qty
6-9611-92-6584	Service kit, EPDM	O-ring Lip seal Plug seal	21 25 27	3 1 2
6-9611-92-6590	Service kit, HNBR	O-ring Lip seal Plug seal	21 25 27	3 1 2
6-9611-92-6596	Service kit, FPM	O-ring Lip seal Plug seal	21 25 27	3 1 2
6-9612-93-9307	Clamp	-	19	2
6-9613-41-4101	Plug	-	1	1
6-9611-99-1988	Air fitting (6 mm)	-	12	1
6-9613-12-5002	Bushing	Bushing	24	1

Alternative TR2

Spare part article No.	Description	Included parts	Pos.	Qty
6-9611-92-6637	Service kit, EPDM	O-ring Lip seal Plug seal	21 25 37	3 1 2
6-9611-92-6642	Service kit, HNBR	O-ring Lip seal Plug seal	21 25 37	3 1 2
6-9611-92-6647	Service kit, FPM	O-ring Lip seal Plug seal	21 25 37	3 1 2
6-9612-93-9320	Clamp	-	19	2
6-9613-41-4101	Plug	-	1	1
6-9611-99-4682	Air fitting ($^1/_4$ “)	-	12	1
6-9613-12-5002	Bushing	Bushing	24	1

1.0 tf505004.en

Valve Long Stroke (LS)
- 38-51 mm/DN40-50/1½”-2”

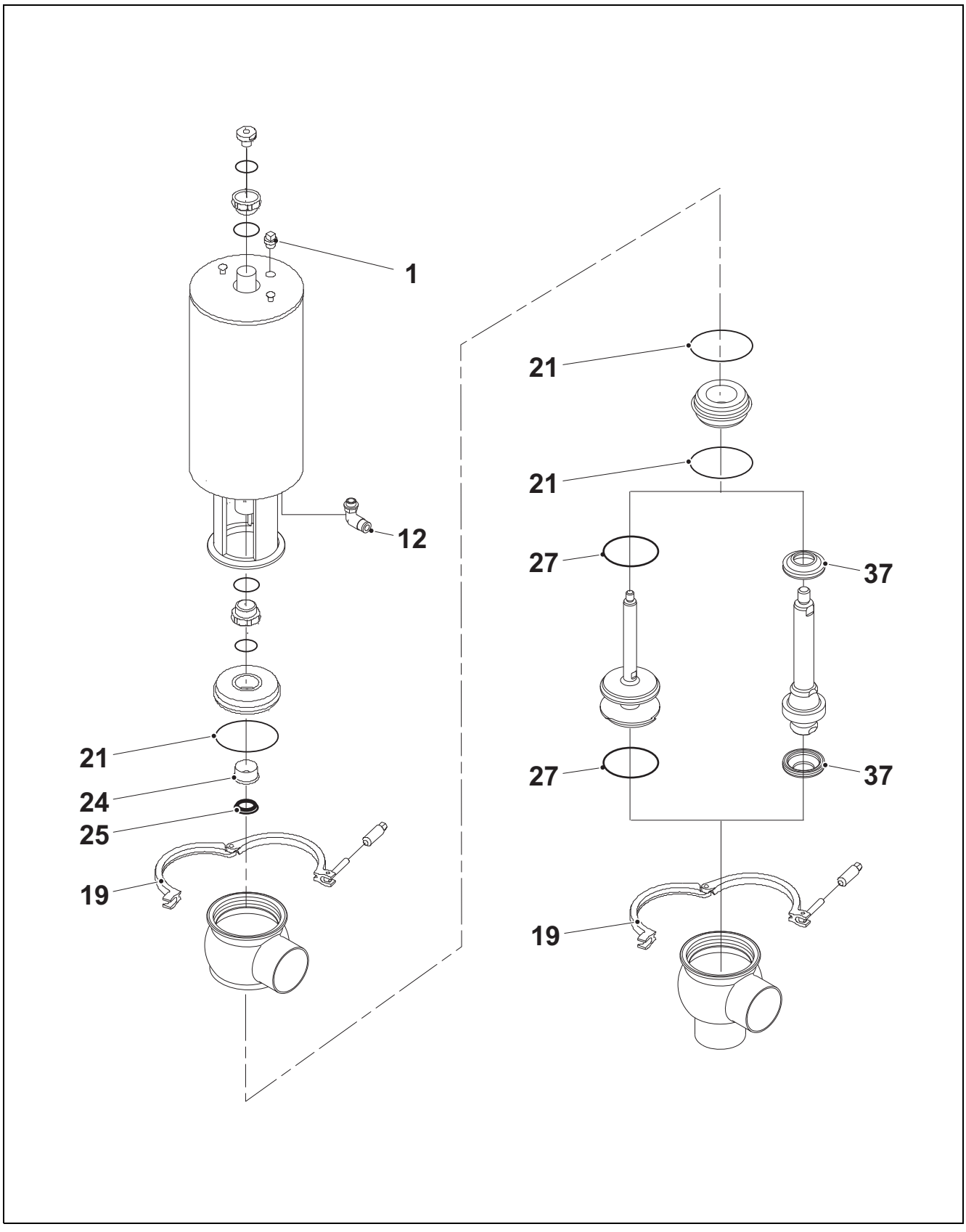

1.0 tf505004.en

DN 40 / 1½”

Spare part article No.	Description	Included parts	Pos.	Qty
6-9611-92-6580	Service kit, EPDM	O-ring Lip seal Plug seal	21 25 27	3 1 2
6-9611-92-6586	Service kit, HNBR	O-ring Lip seal Plug seal	21 25 27	3 1 2
6-9611-92-6592	Service kit, FPM	O-ring Lip seal Plug seal	21 25 27	3 1 2
6-9612-93-9303	Clamp	-	19	2
6-9613-41-4101	Plug	-	1	1
6-9611-99-1988	Air fitting (6 mm)	-	12	1
6-9613-12-5002	Bushing	Bushing	24	1

Alternative TR2

Spare part article No.	Description	Included parts	Pos.	Qty
6-9611-92-6633	Service kit, EPDM	O-ring Lip seal Plug seal	21 25 37	3 1 2
6-9611-92-6638	Service kit, HNBR	O-ring Lip seal Plug seal	21 25 37	3 1 2
6-9611-92-6643	Service kit, FPM	O-ring Lip seal Plug seal	21 25 37	3 1 2
6-9612-93-9316	Clamp	-	19	2
6-9613-41-4101	Plug	-	1	1
6-9611-99-4682	Air fitting ($^1/_4$ “)	-	12	1
6-9613-12-5002	Bushing	Bushing	24	1

1.0 tf505004.en

DN 50 / 2”

Spare part article No.	Description	Included parts	Pos.	Qty
6-9611-92-6581	Service kit, EPDM	O-ring Lip seal Plug seal	21 25 27	3 1 2
6-9611-92-6587	Service kit, HNBR	O-ring Lip seal Plug seal	21 25 27	3 1 2
6-9611-92-6593	Service kit, FPM	O-ring Lip seal Plug seal	21 25 27	3 1 2
6-9612-93-9304	Clamp	-	19	2
6-9613-41-4101	Plug	-	1	1
6-9611-99-1988	Air fitting (6 mm)	-	12	1
6-9613-12-5002	Bushing	Bushing	24	1

Alternative TR2

Spare part article No.	Description	Included parts	Pos.	Qty
6-9611-92-6634	Service kit, EPDM	O-ring Lip seal Plug seal	21 25 37	3 1 2
6-9611-92-6639	Service kit, HNBR	O-ring Lip seal Plug seal	21 25 37	3 1 2
6-9611-92-6644	Service kit, FPM	O-ring Lip seal Plug seal	21 25 37	3 1 2
6-9612-93-9317	Clamp	-	19	2
6-9613-41-4101	Plug	-	1	1
6-9611-99-4682	Air fitting ($^{1}/_{4}$ “)	-	12	1
6-9613-12-5002	Bushing	Bushing	24	1

1.0 tf505004.en

Valve Long Stroke (LS)
- 63.5-101.6 mm/DN65-100/2½”-4”

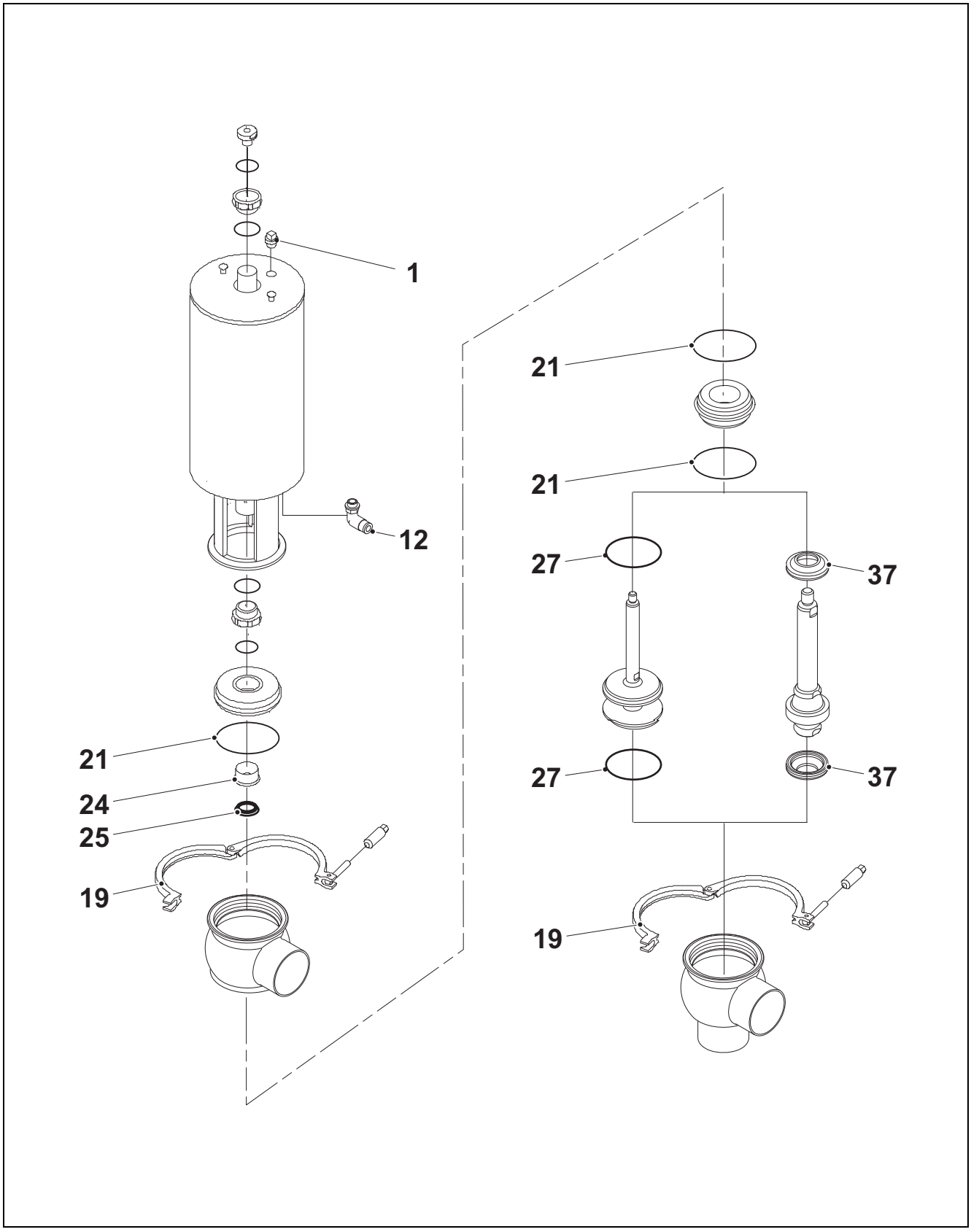

DN 65 / 2½”

Spare part article No.	Description	Included parts	Pos.	Qty
6-9611-92-6582	Service kit, EPDM	O-ring Lip seal Plug seal	21 25 27	3 1 2
6-9611-92-6588	Service kit, HNBR	O-ring Lip seal Plug seal	21 25 27	3 1 2
6-9611-92-6594	Service kit, FPM	O-ring Lip seal Plug seal	21 25 27	3 1 2
6-9612-93-9305	Clamp	-	19	2
6-9613-41-4101	Plug	-	1	1
6-9611-99-1988	Air fitting (6 mm)	-	12	1
6-9613-12-5002	Bushing	Bushing	24	1

Alternative TR2

Spare part article No.	Description	Included parts	Pos.	Qty
6-9611-92-6635	Service kit, EPDM	O-ring Lip seal Plug seal	21 25 37	3 1 2
6-9611-92-6640	Service kit, HNBR	O-ring Lip seal Plug seal	21 25 37	3 1 2
6-9611-92-6645	Service kit, FPM	O-ring Lip seal Plug seal	21 25 37	3 1 2
6-9612-93-9318	Clamp	-	19	2
6-9613-41-4101	Plug	-	1	1
6-9611-99-4682	Air fitting ($^{1}/_{4}$ “)	-	12	1
6-9613-12-5002	Bushing	Bushing	24	1

1.0 tf505004.en

DN 80 / 3”

Spare part article No.	Description	Included parts	Pos.	Qty
6-9611-92-6583	Service kit, EPDM	O-ring Lip seal Plug seal	21 25 27	3 1 2
6-9611-92-6589	Service kit, HNBR	O-ring Lip seal Plug seal	21 25 27	3 1 2
6-9611-92-6595	Service kit, FPM	O-ring Lip seal Plug seal	21 25 27	3 1 2
6-9612-93-9306	Clamp	-	19	2
6-9613-41-4101	Plug	-	1	1
6-9611-99-1988	Air fitting (6 mm)	-	12	1
6-9613-12-5002	Bushing	Bushing	24	1

Alternative TR2

Spare part article No.	Description	Included parts	Pos.	Qty
6-9611-92-6636	Service kit, EPDM	O-ring Lip seal Plug seal	21 25 37	3 1 2
6-9611-92-6641	Service kit, HNBR	O-ring Lip seal Plug seal	21 25 37	3 1 2
6-9611-92-6646	Service kit, FPM	O-ring Lip seal Plug seal	21 25 37	3 1 2
6-9612-93-9319	Clamp	-	19	2
6-9613-41-4101	Plug	-	1	1
6-9611-99-4682	Air fitting ($^1/_4$ “)	-	12	1
6-9613-12-5002	Bushing	Bushing	24	1

1.0 tf505004.en

DN 100 / 4”

Spare part article No.	Description	Included parts	Pos.	Qty
6-9611-92-6584	Service kit, EPDM	O-ring Lip seal Plug seal	21 25 27	3 1 2
6-9611-92-6590	Service kit, HNBR	O-ring Lip seal Plug seal	21 25 27	3 1 2
6-9611-92-6596	Service kit, FPM	O-ring Lip seal Plug seal	21 25 27	3 1 2
6-9612-93-9307	Clamp	-	19	2
6-9613-41-4101	Plug	-	1	1
6-9611-99-1988	Air fitting (6 mm)	-	12	1
6-9613-12-5002	Bushing	Bushing	24	1

Alternative TR2

Spare part article No.	Description	Included parts	Pos.	Qty
6-9611-92-6637	Service kit, EPDM	O-ring Lip seal Plug seal	21 25 37	3 1 2
6-9611-92-6642	Service kit, HNBR	O-ring Lip seal Plug seal	21 25 37	3 1 2
6-9611-92-6647	Service kit, FPM	O-ring Lip seal Plug seal	21 25 37	3 1 2
6-9612-93-9320	Clamp	-	19	2
6-9613-41-4101	Plug	-	1	1
6-9611-99-4682	Air fitting ($^{1}/_{4}$ “)	-	12	1
6-9613-12-5002	Bushing	Bushing	24	1

1.0 tf505004.en

Actuator - optional maintainable version 25-101.6mm/DN25-100

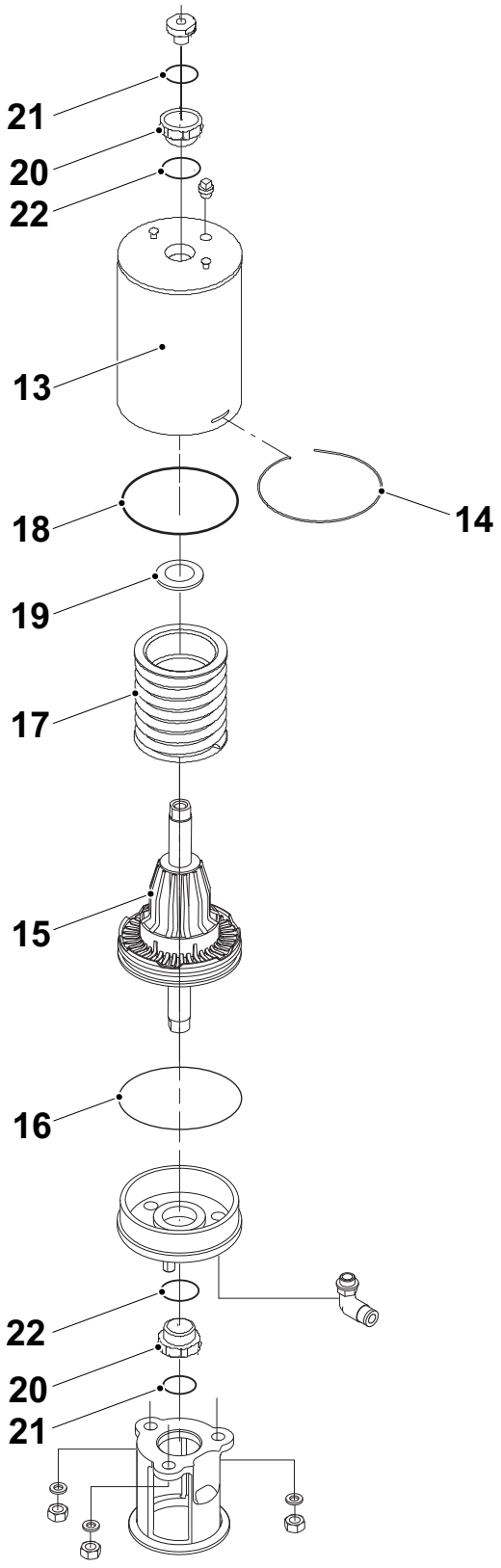

1.0 tf505004.en

DN 25 - DN 40 / 1”- 1½”

Spare part article No.	Description	Included parts	Pos.	Qty
6-9613-14-4701	Actuator, complete, maintainable (NO)	-	-	1
6-9613-14-4704	Actuator, complete, maintainable (NC)	-	-	1
6-9613-14-4707	Actuator, complete, maintainable (A/A)	-	-	1
6-9613-14-4710	Actuator, complete, maintainable (NO) (USA)	-	-	1
6-9613-14-4713	Actuator, complete, maintainable (NC) (USA)	-	-	1
6-9613-14-4716	Actuator, complete, maintainable (A/A) (USA)	-	-	1
6-9611-92-6497	Service kit, NO, NC	O-ring Bushing O-ring O-ring O-ring	18 20 21 22 16	1 2 2 2 1
6-9611-92-6519	Service kit, A/A	O-ring Bushing O-ring O-ring O-ring Support disc	18 20 21 22 16 19	1 2 2 2 1 1
6-9613-14-2501	Cylinder	-	13	1
6-9613-14-2504	Cylinder (USA)	-	13	1
6-9613-13-2201	Piston	-	15	1
6-9613-14-3201	Lock wire	-	14	1
6-9613-13-2501	Spring assembly	-	17	1

1.0 tf505004.en

DN 50 - DN 65 / 2”- 2½”

Spare part article No.	Description	Included parts	Pos.	Qty
6-9613-14-4702	Actuator, complete, maintainable (NO)	-	-	1
6-9613-14-4705	Actuator, complete, maintainable (NC)	-	-	1
6-9613-14-4708	Actuator, complete, maintainable (A/A)	-	-	1
6-9613-14-4711	Actuator, complete, maintainable (NO) (USA)	-	-	1
6-9613-14-4714	Actuator, complete, maintainable (NC) (USA)	-	-	1
6-9613-14-4717	Actuator, complete, maintainable (A/A) (USA)	-	-	1

Spare part article No.	Description	Included parts	Pos.	Qty
6-9611-92-6498	Service kit, NO, NC	O-ring Bushing O-ring O-ring O-ring	18 20 21 22 16	1 2 2 2 1
6-9611-92-6520	Service kit, A/A	O-ring Bushing O-ring O-ring O-ring Support disc	18 20 21 22 16 19	1 2 2 2 1 1
6-9613-14-2502	Cylinder	-	13	1
6-9613-14-2505	Cylinder (USA)	-	13	1
6-9613-13-2301	Piston	-	15	1
6-9613-14-3202	Lock wire	-	14	1
6-9613-13-2502	Spring assembly	-	17	1

DN 80 - DN 100 / 3”- 4”

Spare part article No.	Description	Included parts	Pos.	Qty
6-9613-14-4703	Actuator, complete, maintainable (NO)	-	-	1
6-9613-14-4706	Actuator, complete, maintainable (NC)	-	-	1
6-9613-14-4709	Actuator, complete, maintainable (A/A)	-	-	1
6-9613-14-4712	Actuator, complete, maintainable (NO) (USA)	-	-	1
6-9613-14-4715	Actuator, complete, maintainable (NC) (USA)	-	-	1
6-9613-14-4718	Actuator, complete, maintainable (A/A) (USA)	-	-	1
6-9611-92-6499	Service kit, NO, NC	O-ring Bushing O-ring O-ring O-ring	18 20 21 22 16	1 2 2 2 1
6-9611-92-6521	Service kit, A/A	O-ring Bushing O-ring O-ring O-ring Support disc	18 20 21 22 16 19	1 2 2 2 1 1
6-9613-14-2503	Cylinder	-	13	1
6-9613-14-2506	Cylinder (USA)	-	13	1
6-9613-13-2401	Piston	-	15	1
6-9613-14-3203	Lock wire	-	14	1

1.0 tf505004.en

Spare part article No.	Description	Included parts	Pos.	Qty
6-9613-13-2503	Spring assembly	-	17	1

NO = Normally Open
NC = Normally Closed
A/A = Air / Air, pneumatic upward and downward movement.

Actuator - standard version 25-101.6mm/DN25-100

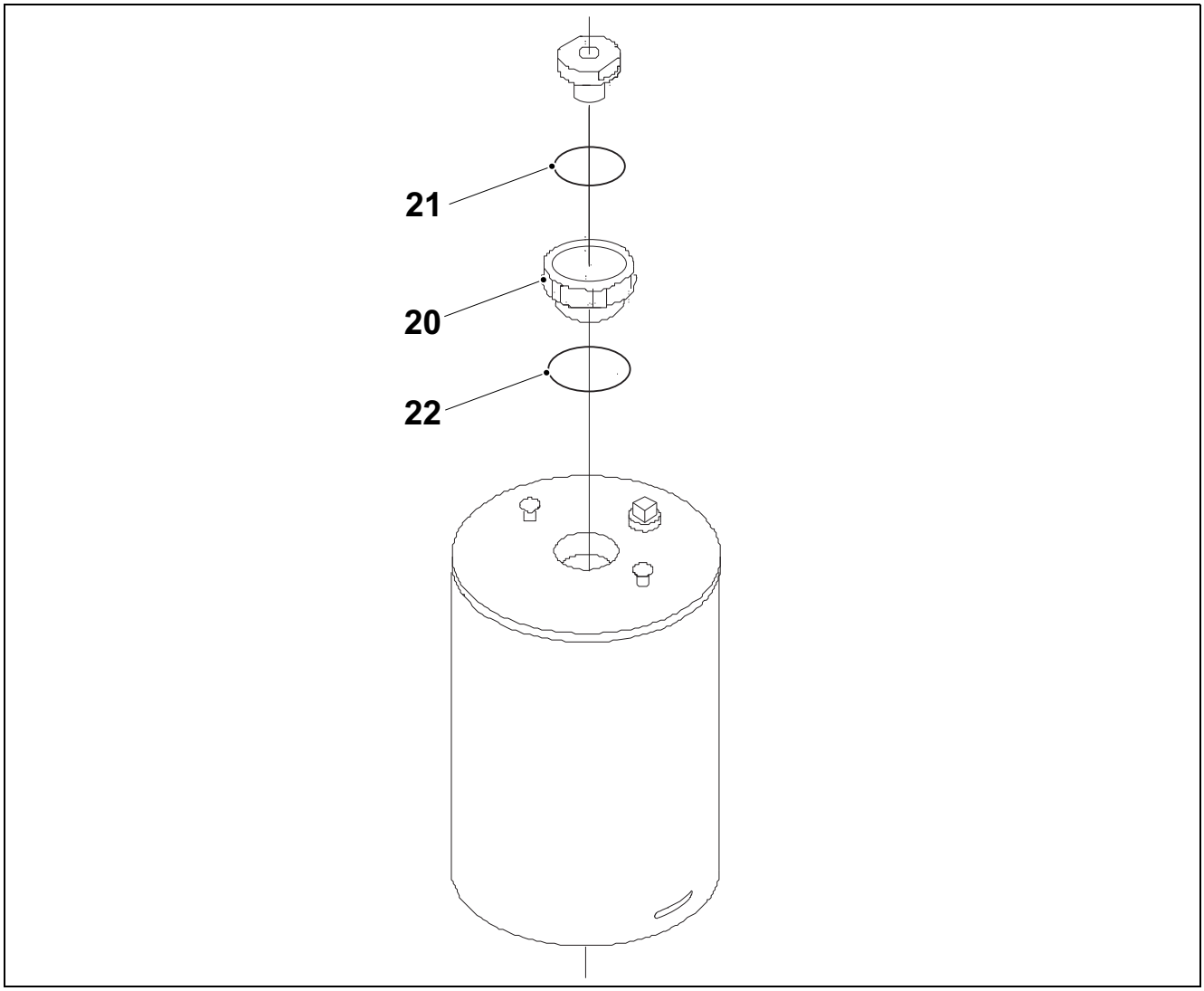

1.0 tf505004.en

DN 25 - DN 40 / 1”- 1½”

Spare part article No.	Description	Included parts	Pos.	Qty
6-9613-15-4801	Actuator, complete (NO)	-	-	1
6-9613-15-4806	Actuator, complete (NC)	-	-	1
6-9613-15-4811	Actuator, complete (A/A)	-	-	1
6-9613-15-4831	Actuator, complete (NO) (USA)	-	-	1
6-9613-15-4836	Actuator, complete (NC) (USA)	-	-	1
6-9613-15-4841	Actuator, complete (A/A) (USA)	-	-	1
6-9611-92-6500	Service kit	Bushing O-ring O-ring	20 21 22	2 2 2

DN 50 - 2”

Spare part article No.	Description	Included parts	Pos.	Qty
6-9613-15-4802	Actuator, complete (NO)	-	-	1
6-9613-15-4807	Actuator, complete (NC)	-	-	1
6-9613-15-4812	Actuator, complete (A/A)	-	-	1
6-9613-15-4832	Actuator, complete (NO) (USA)	-	-	1
6-9613-15-4837	Actuator, complete (NC) (USA)	-	-	1
6-9613-15-4837	Actuator, complete (A/A) (USA)	-	-	1
6-9611-92-6500	Service kit	Bushing O-ring O-ring	20 21 22	2 2 2

DN 65 - 2½”

Spare part article No.	Description	Included parts	Pos.	Qty
6-9613-15-4803	Actuator, complete (NO)	-	-	1
6-9613-15-4808	Actuator, complete (NC)	-	-	1
6-9613-15-4813	Actuator, complete (A/A)	-	-	1
6-9613-15-4833	Actuator, complete (NO) (USA)	-	-	1
6-9613-15-4838	Actuator, complete (NC) (USA)	-	-	1
6-9613-15-4843	Actuator, complete (A/A) (USA)	-	-	1
6-9611-92-6500	Service kit	Bushing O-ring O-ring	20 21 22	2 2 2

1.0 tf505004.en

DN 80 - 3”

Spare part article No.	Description	Included parts	Pos.	Qty
6-9613-15-4804	Actuator, complete (NO)	-	-	1
6-9613-15-4809	Actuator, complete (NC)	-	-	1
6-9613-15-4814	Actuator, complete (A/A)	-	-	1
6-9613-15-4834	Actuator, complete (NO) (USA)	-	-	1
6-9613-15-4839	Actuator, complete (NC) (USA)	-	-	1
6-9613-15-4844	Actuator, complete (A/A) (USA)	-	-	1
6-9611-92-6500	Service kit	Bushing O-ring O-ring	20 21 22	2 2 2

DN 100 - 4”

Spare part article No.	Description	Included parts	Pos.	Qty
6-9613-15-4805	Actuator, complete (NO)	-	-	1
6-9613-15-4810	Actuator, complete (NC)	-	-	1
6-9613-15-4815	Actuator, complete (A/A)	-	-	1
6-9613-15-4835	Actuator, complete (NO) (USA)	-	-	1
6-9613-15-4840	Actuator, complete (NC) (USA)	-	-	1
6-9613-15-4845	Actuator, complete (A/A) (USA)	-	-	1
6-9611-92-6500	Service kit	Bushing O-ring O-ring	20 21 22	2 2 2

1.0 tf505004.en

Actuator Two Step (TS) - maintainable version 38-101.6mm/DN40-100

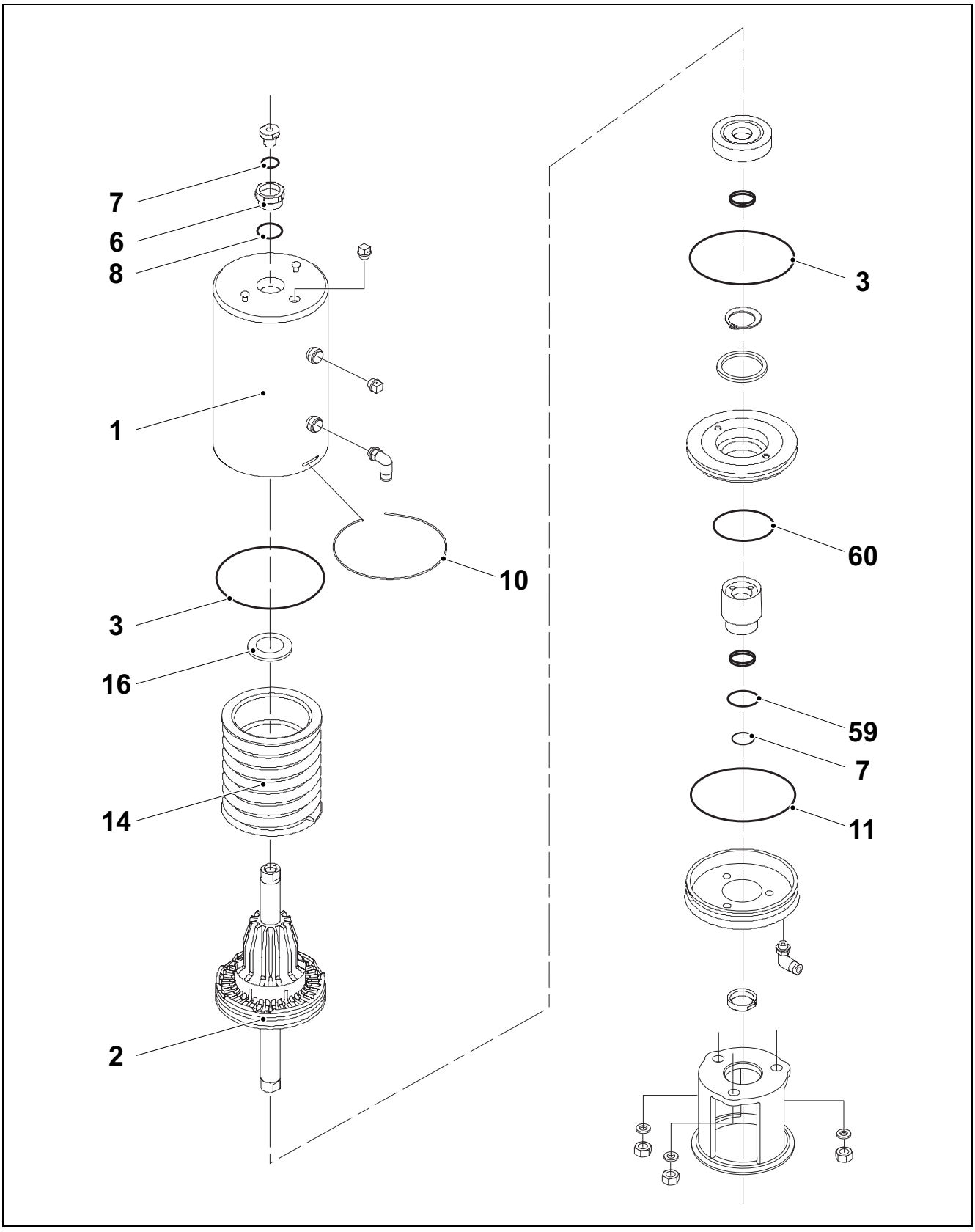

1.0 tf505004.en

DN 40

Spare part article No.	Description	Included parts	Pos.	Qty
6-9613-16-8725	Actuator, complete, maintainable (NO)	-	-	1
6-9613-16-8717	Actuator, complete, maintainable (NC)	-	-	1
6-9611-92-6738	Service kit	O-ring Bushing O-ring O-ring O-ring Support disc O-ring O-ring	3 6 7 8 11 16 59 60	2 1 2 1 1 1 1 1
6-9613-16-7705	Cylinder	-	1	1
6-9613-13-2304	Piston	-	2	1
6-9613-14-3202	Lock wire	-	10	1
6-9613-13-2502	Spring assembly	-	14	1

DN 50

Spare part article No.	Description	Included parts	Pos.	Qty
6-9613-16-8725	Actuator, complete, maintainable (NO)	-	-	1
6-9613-16-8717	Actuator, complete, maintainable (NC)	-	-	1
6-9611-92-6738	Service kit	O-ring Bushing O-ring O-ring O-ring Support disc O-ring O-ring	3 6 7 8 11 16 59 60	2 1 2 1 1 1 1 1
6-9613-16-7705	Cylinder	-	1	1
6-9613-13-2304	Piston	-	2	1
6-9613-14-3202	Lock wire	-	10	1
6-9613-13-2502	Spring assembly	-	14	1

1.0 tf505004.en

DN 65

Spare part article No.	Description	Included parts	Pos.	Qty
6-9613-16-8725	Actuator, complete, maintainable (NO)	-	-	1
6-9613-16-8717	Actuator, complete, maintainable (NC)	-	-	1
6-9611-92-6738	Service kit	O-ring Bushing O-ring O-ring O-ring Support disc O-ring O-ring	3 6 7 8 11 16 59 60	2 1 2 1 1 1 1 1
6-9613-16-7705	Cylinder	-	1	1
6-9613-13-2304	Piston	-	2	1
6-9613-14-3202	Lock wire	-	10	1
6-9613-13-2502	Spring assembly	-	14	1

1.0 tf505004.en

DN 80

Spare part article No.	Description	Included parts	Pos.	Qty
6-9613-16-8726	Actuator, complete, maintainable (NO)	-	-	1
6-9613-16-8718	Actuator, complete, maintainable (NC)	-	-	1
6-9611-92-6739	Service kit	O-ring Bushing O-ring O-ring O-ring Support disc O-ring O-ring	3 6 7 8 11 16 59 60	2 1 2 1 1 1 1 1
6-9613-16-7706	Cylinder	-	1	1
6-9613-13-2405	Piston	-	2	1
6-9613-14-3203	Lock wire	-	10	1
6-9613-13-2503	Spring assembly	-	14	1

DN 100

Spare part article No.	Description	Included parts	Pos.	Qty
6-9613-16-8726	Actuator, complete, maintainable (NO)	-	-	1
6-9613-16-8718	Actuator, complete, maintainable (NC)	-	-	1
6-9611-92-6739	Service kit	O-ring Bushing O-ring O-ring O-ring Support disc O-ring O-ring	3 6 7 8 11 16 59 60	2 1 2 1 1 1 1 1
6-9613-16-7706	Cylinder	-	1	1
6-9613-13-2405	Piston	-	2	1
6-9613-14-3203	Lock wire	-	10	1
6-9613-13-2503	Spring assembly	-	14	1

NO = Normally Open
NC = Normally Closed
A/A = Air / Air, pneumatic upward and downward movement.

1.0 tf505004.en

Tools

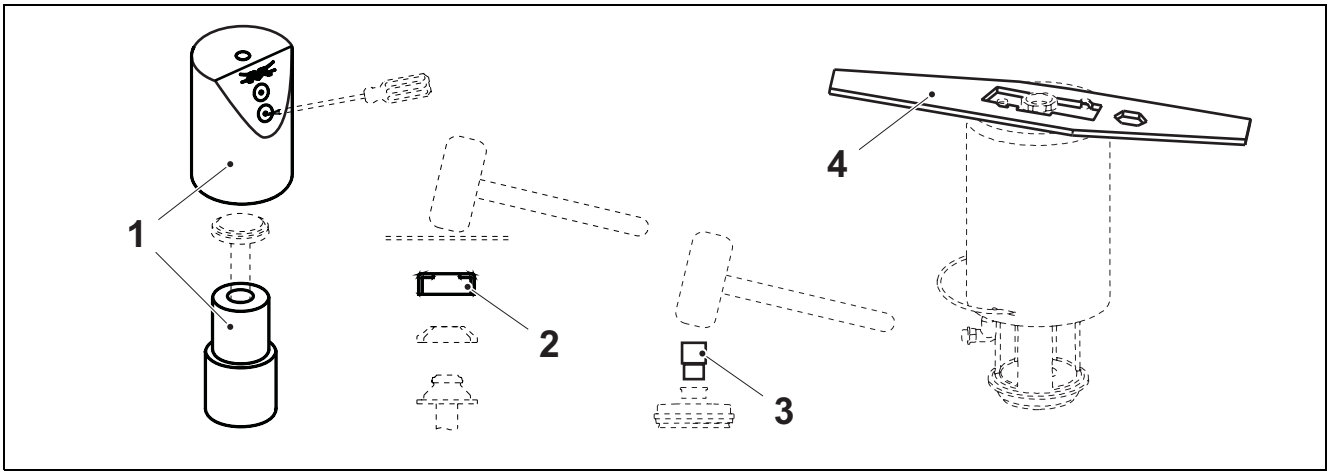

Tool article No.	Size	Description	Pos.	Qty
6-9613-1729-01	DN/OD38	Mounting tool, not for aseptic valve	1	1
6-9613-1729-02	DN/OD51-63.5			
6-9613-1729-03	DN/OD76.1-101.6			
6-9614-06-0001	DN/OD25	Aseptic valve, mounting tool		
6-9614-06-0002	DN/OD38			
6-9614-06-0003	DN/OD51-63.5			
6-9614-06-0004	DN/OD76.1-101.6			
6-9613-16-3206	DN/OD25	Mounting tool for TR2 plugs	2	1
6-9613-16-3201	DN/OD40			
6-9613-16-3202	DN/OD50			
6-9613-16-3203	DN/OD65			
6-9613-16-3204	DN/OD80			
6-9613-16-3205	DN/OD100			
6-9613-16-0901	DN/OD25-101.6	Bushing tool	3	1
6-31353-0219-1	DN/OD25-63.5	Actuator dismantling tool	4	1
6-9612-45-4001	DN/OD76.1-101.6			

1.0 tf505004.en

Tetra Pak

Maintenance & Spare Parts

Unique Single Seat Valve, Reverse acting

(Alfa Laval Flow)

SSV Change-over Valves



1.0 1221124-0101.fro

Tetra Pak

Doc No. 1221124-0101

Unique Single Seat Valve, Reverse acting

SSV Change-over Valves

This document refers to components specified in Technical Manual,
on Maintenance & Spare Parts CD/DVD or on Tetra Pak Intranet.

1.0 1221124-0101.fro

Version 04 2013-03

Doc No. 1221124-0101

Tetra Pak

Tetra Pak Processing Systems AB

Table of contents

General 1

Function description 1

Maintenance 2

Pre-use check. 2

Valve 3

Disassemble valve. 3

Reassemble valve 6

Plug seal replacement 7

Actuator, optional maintainable version 10

Change spare part kit. 10

Actuator, both standard and optional maintainable version 12

Actuator bushing replacement. 12

Cleaning 13

Troubleshooting. 15

Spare parts 16

Valve - 25-51 mm/DN25-50/1½”-2” 16

Valve - 63.5-101.6 mm/DN65-100/2½”-4” 20

Actuator - optional maintainable version 25-101.6mm/DN25-100. 24

Actuator - standard version 25-101.6mm/DN25-100. 28

Tools 31

1.0 1221124-0101.TOC

This page intentionally left blank

General

Function description

The Unique Single Seat Reverse Acting Valve, change-over version, is an air-operated seat valve in a sanitary and flexible design giving a wide field of applications, e.g. as a change-over valve with three to six ports.

The valve is remote-controlled by means of compressed air. The Unique Single Seat Reverse Acting Valve, change-over version, consists of two or three bodies which are clamped together. To ensure a high degree of flexibility the valve seat between the two bodies in the change-over version is loose. To reduce the wear of sealings there is a controlled compression of seals by metal to metal contact. The actuator is connected to the valve body using a yoke and all components are assembled with clamp rings.

2.2tf505007.en

Maintenance

Pre-use check

WARNING!

Risk of injury!
Never service the valve when it is hot.
Never service the valve with valve and pipelines under pressure.
Never stick your fingers through the valve ports if the actuator is supplied with compressed air.
Never touch the clip assembly or the actuator piston rod if the actuator is supplied with compressed air.
Always release the compressed air after use.
Always remove the CIP connections, if supplied, before service.

Note! Check the valve for smooth operation after service.

a) Supply compressed air to the actuator.

b) Operate the valve several times to ensure that it operates smoothly.

Note! Pay special attention to the warnings!

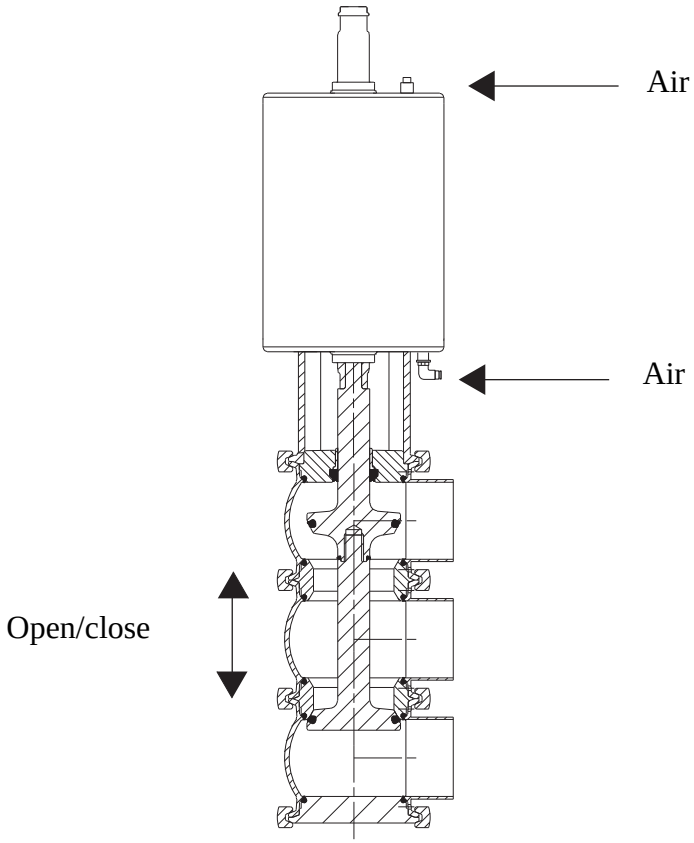

2.2tf505007.en

Valve

Disassemble valve

WARNING!

Risk of injury!
- Never service the valve when it is hot.
- Never service the valve with valve and pipelines under pressure.
- Make sure that the pipeline is drained and free from media before servicing the valve.
- The valve and pipelines must **never** be pressurised when serviced.
- Never stick your fingers through the valve ports if the actuator is supplied with compressed air.
- Never touch the clip assembly or the actuator piston rod if the actuator is supplied with compressed air.
- Always release compressed air after use.

2.2tf505007.en

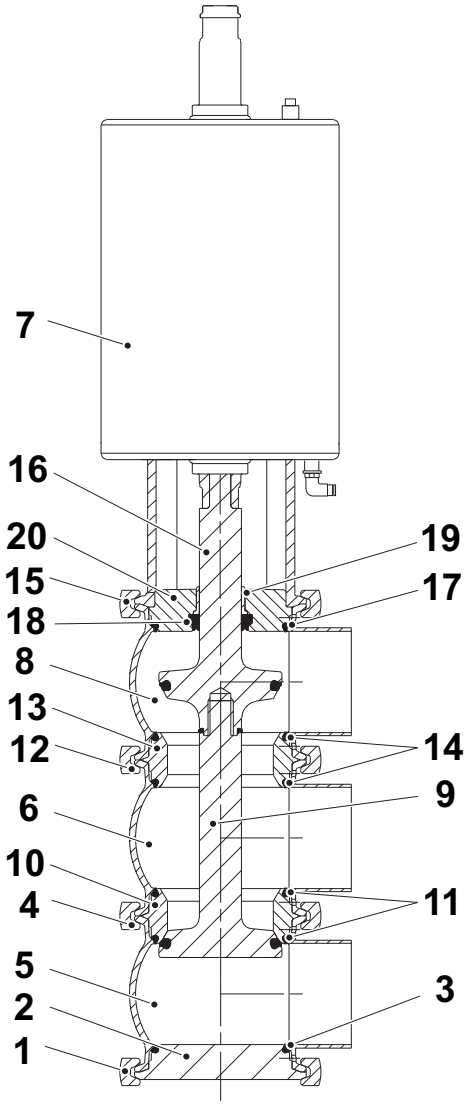

1 Lower Clamp
2 Lower bonnet
3 O-ring
4 Clamp
5 Lower valve body
6 Middle valve body
7 Actuator
8 Upper valve body
9 Lower plug
10 Lower valve seat
11 O-rings
12 Clamp
13 Upper seat
14 O-rings
15 Upper clamp
16 Upper valve plug
17 O-ring
18 Lip seal
19 Bushing
20 Bonnet

(Cont'd)

(Cont'd)

Note! NO: Normally open
NC: Normally closed
A/A: Air/Air activated

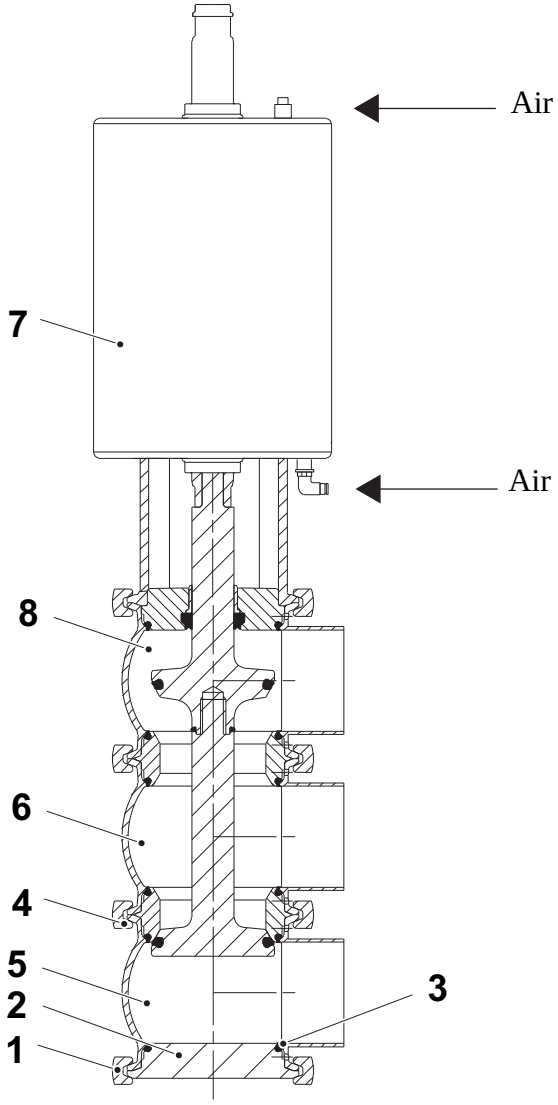

2.2tf505007.en

a) Loosen and remove lower clamp (1).

b) Remove lower bonnet (2) and O-ring (3).

c) Loosen and remove the clamp (4) between lower (5) and middle valve body (6).

d) Lift away the actuator (7), upper (8) and middle valve body (6).

(Cont'd)

(Cont'd)

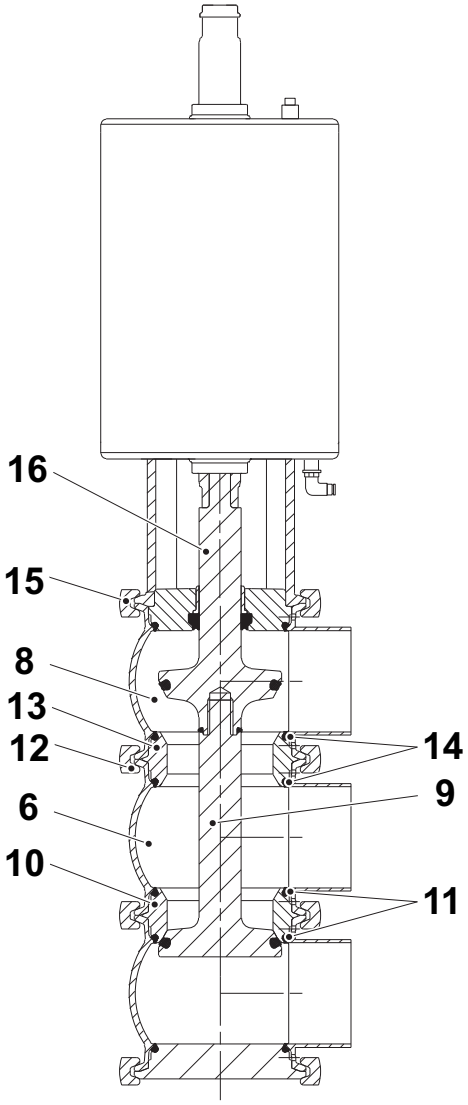

2.2tf505007.en

a) **NC**: Supply compressed air to the actuator.
b) Unscrew and remove lower valve plug (9).
c) **NC**: Release compressed air.
d) Remove lower seat (10) and O-rings (11).
e) **NO**: Supply compressed air to the actuator.
f) Loosen and remove clamp (12) between middle (6) and upper valve body (8).
g) Remove middle valve body (6) and upper seat (13) with O-rings (14).
h) **NO**: Release compressed air.
i) Loosen and remove upper clamp (15).
j) Remove upper valve body (8).
k) Unscrew and remove upper valve plug (16).

(Cont'd)

(Cont'd)

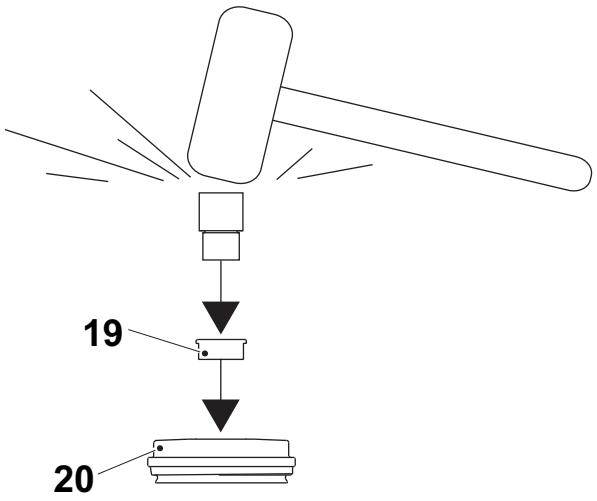

l) Remove O-ring (17), lip seal (18) and bushing (19) in bonnet (20).

Note! Use bushing tool and rubber mallet.

Reassemble valve

Reassemble in the reverse order to disassemble of the valve.

Note! Lubricate O-rings (3), (11), (14), (17) and lip seal (18) with Klüber Paraliq GTE 703.

2.2tf505007.en

Plug seal replacement

Elastomer plug seal replacement

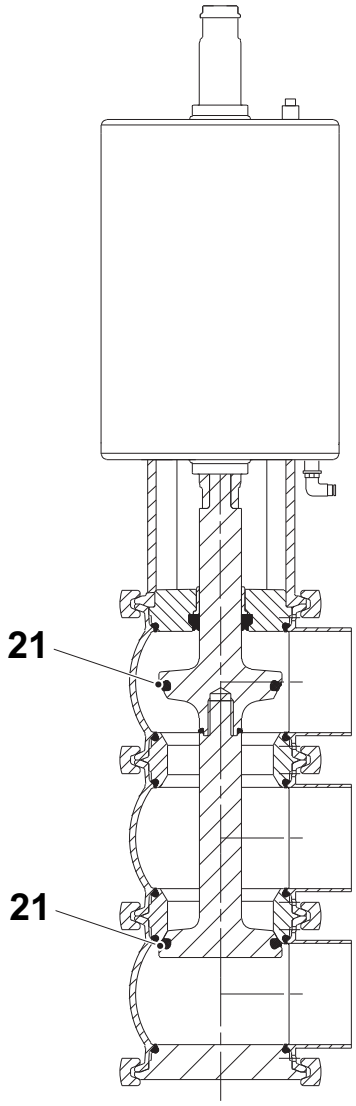

2.2tf505007.en

a) Remove old plug seals (21) using a knife, screwdriver or similar. Be careful not to damage metal parts.

b) Pre-mount plug seals (21) without pressing it into the groove.

With mounting tool

c) Put the plug (9) in the lower part (40) of the mounting tool.

d) Put the upper part of mounting tool (41) over the plug and press down.

e) The seal will be visible in one of the bores (42). Very carefully insert a narrow screwdriver just under the seal (21).

f) Carefully press it down, in order to release compressed air behind the seal (21).

(Cont'd)

(Cont'd)

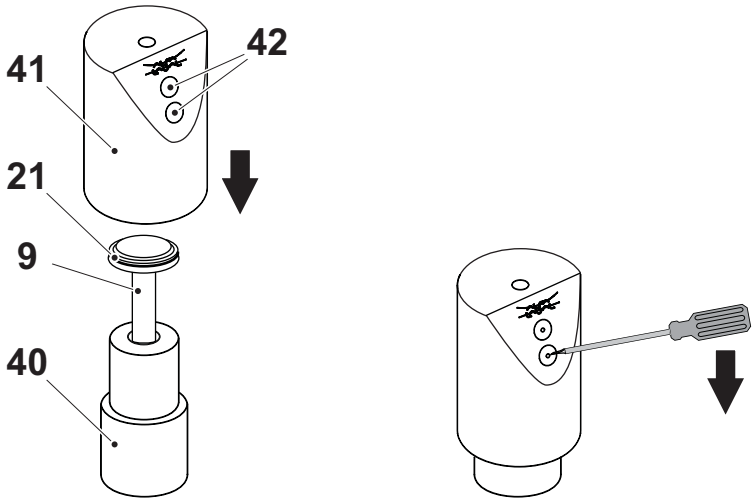

9 Plug
21 Plug seal
40 Mounting tool lower part
41 Mounting tool upper part
42 Bores

Without mounting tool

g) Squeeze plug seals (21) into the groove using opposite pressure points.

h) Release compressed air behind plug seals (21).

2.2tf505007.en

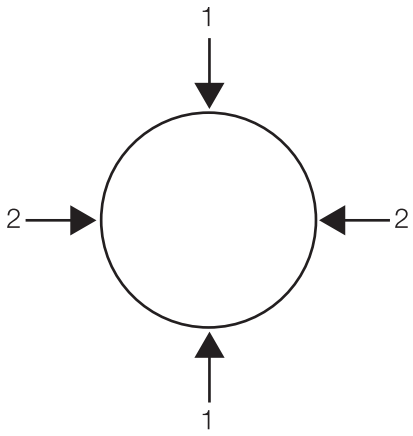

(Cont'd)

(Cont'd)

TR2 seat ring replacement

a) Place the plug element on a firm support.

b) Using a utility knife, partially and carefully cut through the upper ring portion of the TR2 plug avoiding contact with stainless steel stem.

c) Force apart both cut ends of the plug for removal from stem.

d) TR2 plugs are installed by applying uniform pressure on all sides. (Pressure can be applied using the seat assembly tool.)

e) Using a piece of metal and a rubber mallet, place a precise tab to make the TR2 plug snap on to the stem. Reverse the tool and tab again to secure proper fit.

f) Examine seat assembly in one hand - rotate the TR2 plug. (For proper CIP cleaning the TR2 plug should turn freely on the stem.)

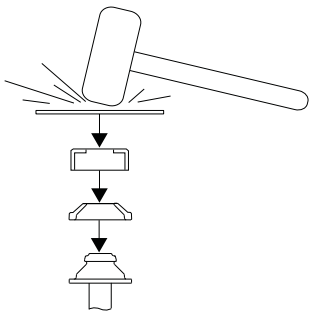

2.2tf505007.en

Actuator, optional maintainable version

Change spare part kit

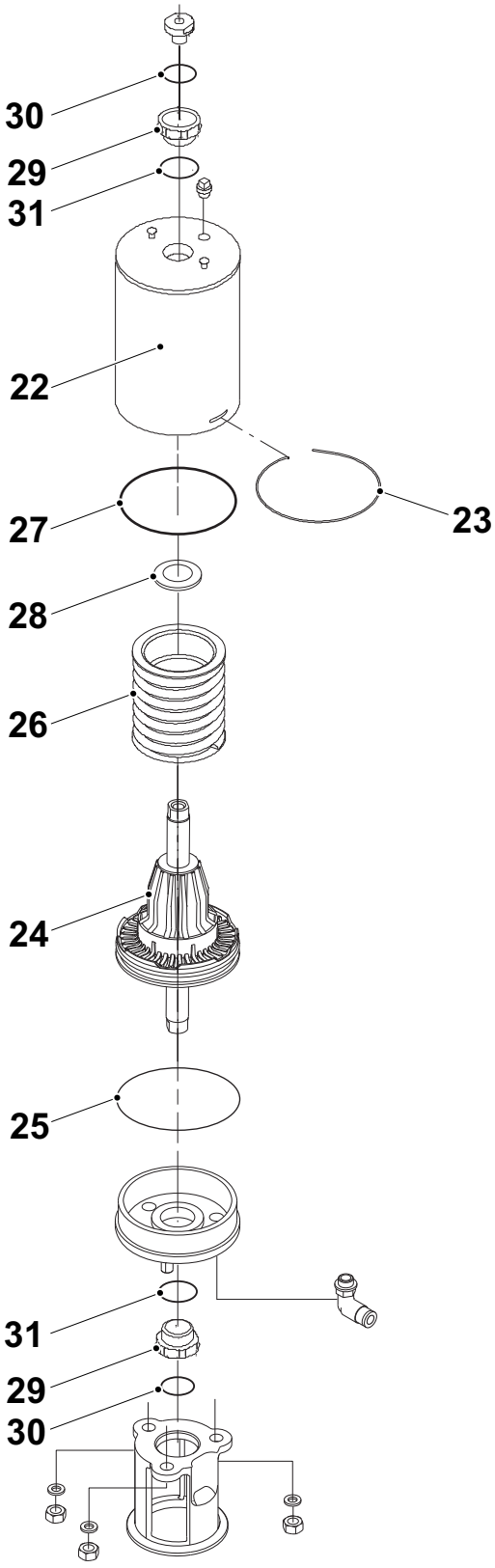

2.2tf505007.en

22 Cylinder
23 Lock wire
24 Piston
25 O-ring
26 Spring assembly
27 O-ring
28 Support disc
29 Bushing
30 O-ring
31 O-ring

WARNING!

Dismantling/Assembly

Risk of injury!

- Make sure that the pipelines are drained and free from media before servicing the valve!
- **Never** service the valve when it is hot!
- **Never** service the valve with valve and pipelines under pressure.
- **Always** release compressed air after use.
- **Never** touch the clip assembly or the actuator piston rod if the actuator is supplied with compressed air.
- **Never** put your fingers through the valve ports if the actuator is supplied with compressed air!

Note! NC = Normally closed.

NO = Normally open.

A/A = Air/air activated

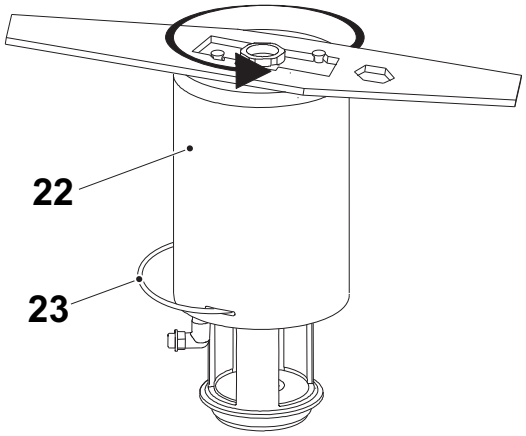

2.2tf505007.en

a) Rotate cylinder (22).
b) Remove lock wire (23) and pull away cylinder (22).
c) Unscrew nuts and remove yoke.
d) Unscrew top and bottom bushings (29).
e) Remove piston (24) with O-ring (25) and spring assembly (26).
f) Remove O-ring (27) and support disc (28).

Note! The A/A actuator has no spring assembly.

Assembly

Assembly of the actuator is made in the reverse order to dismantling.

Note! Lubricate O-rings (25) and (27) with Molykote Longterm 2 plus before fitting.

Actuator, both standard and optional maintainable version

Actuator bushing replacement

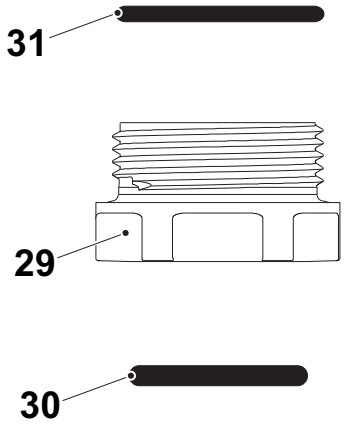

a) Unscrew and remove top and bottom bushings (29) with O-rings (30) and (31).

b) Lubricate O-rings (30) and (31) with Molykote Longterm 2 plus before fitting.

c) Fit bushings (29) and O-rings (30) and (31). Be careful not to overtighten.

2.2tf505007.en

Cleaning

DANGER! **Risk of injury!**
Always handle lye and acid with great care!
Always use rubber gloves!
Always use protective goggles!

WARNING! **Risk of burning!**
Never touch the pump or the pipelines when sterilizing.

WARNING! **Risk of injury!**
Always rinse well with clean water after the cleaning.

Note! Clean the plug and seats correctly

Note! Lift and lower valve plug momentarily!

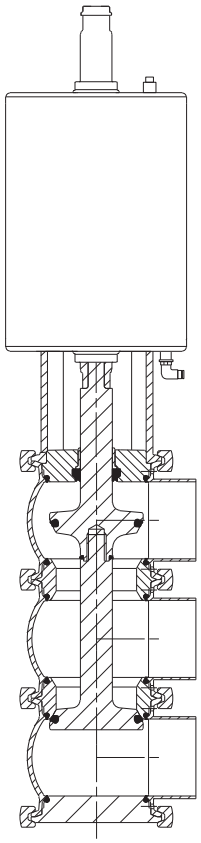

Note! The cleaning agents must be stored/discharged in accordance with current rules/directives.

Note! Avoid excessive concentration of the cleaning agent, dose gradually.

Note! Adjust the cleaning flow to the process.

(Cont'd)

2.2tf505007.en

(Cont'd)

Examples of cleaning agents:

Use clean water, free from chlorides.

– 1% by weight NaOH at 70°C.

1 kg NaOH + 100 litre water = Cleaning agent

2.2 litre 33% NaOH + 100 litre water = Cleaning agent

– 0.5% by weight HNO_3 at 70°C.

0.7 litre 53% HNO3 + 100 litre water = Cleaning agent

NaOH = Caustic soda
HNO_3= Nitric acid

2.2tf505007.en

Troubleshooting

Problem	Cause	Action
External product leakage	- Worn or product affected lipseal and/or O-ring	- Replace the seals - Replace with seals of a different rubber grade
Internal product leakage	- Worn or product affected plug seal - Product deposits on the seat and/or plug - Product pressure exceeds actuator specification	- Replace the seal - Frequent cleaning - Replace with a high pressure actuator - Use auxiliary air on the spring side - Reduce product pressure
Water hammer	- The flow direction is the same as the closing direction	- The flow direction should be against the closing direction - Throttle air release of solenoid in top unit
The valve does not open/close	- Product pressure exceeds actuator specification	- Replace with a high pressure actuator - Use auxiliary air on the spring side - Reduce product pressure

2.2tf505007.en

Spare parts

Valve - 25-51 mm/DN25-50/1½”-2”

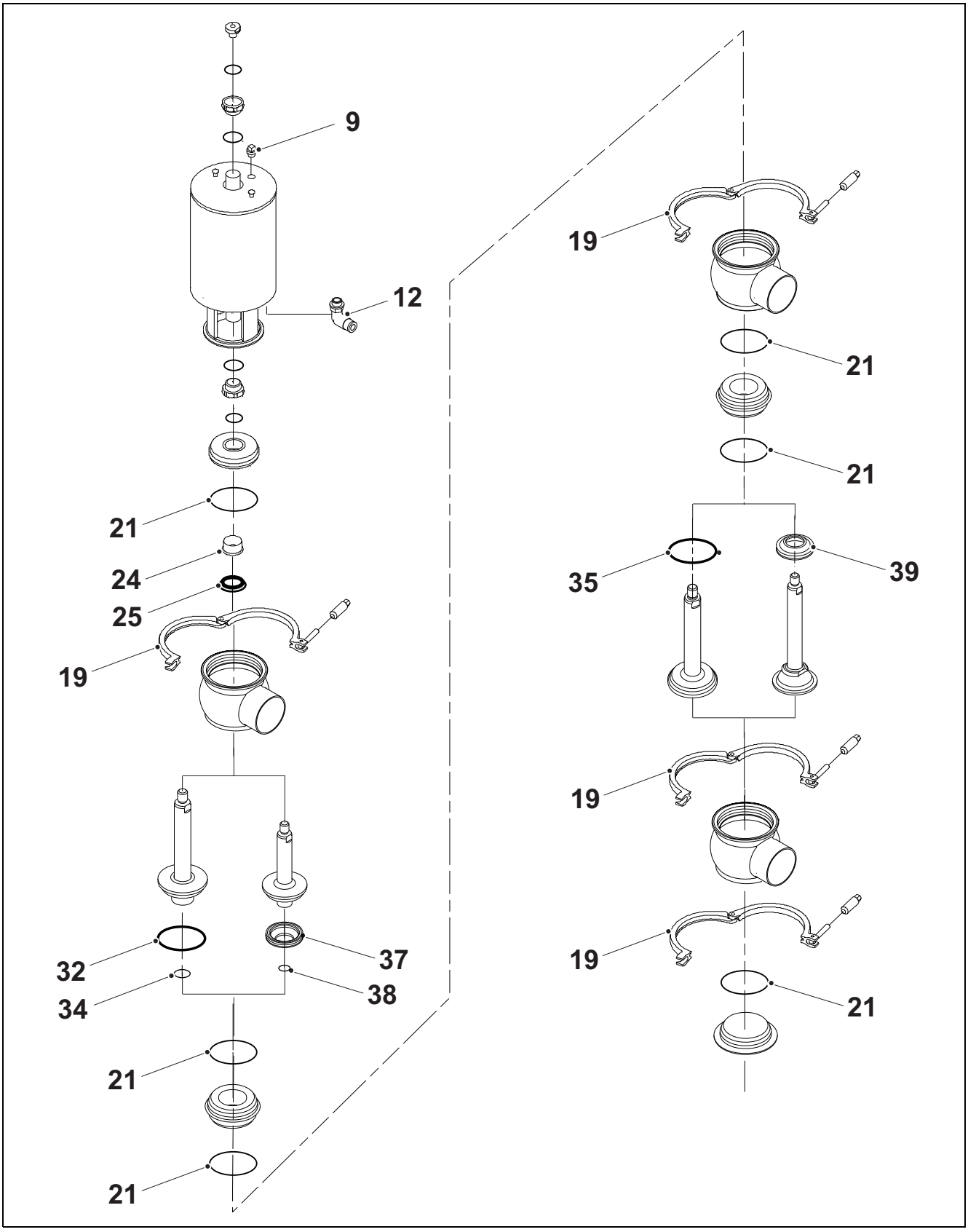

DN 25 / 1”

Spare part article No.	Description	Included parts	Pos.	Qty
6-9611-92-6597	Service kit, EPDM	O-ring Lip seal Plug seal O-ring Plug seal	21 25 32 34 35	6 1 1 1 1
6-9611-92-6603	Service kit, HNBR	O-ring Lip seal Plug seal O-ring Plug seal	21 25 32 34 35	6 1 1 1 1
6-9611-92-6609	Service kit, FPM	O-ring Lip seal Plug seal O-ring Plug seal	21 25 32 34 35	6 1 1 1 1
6-9612-93-9303	Clamp	-	19	4
6-9613-41-4101	Plug	-	9	1
6-9611-99-1988	Air fitting (6 mm)	-	12	1
6-9613-12-5002	Bushing	Bushing	24	1

2.2tf505008.en

DN 40 / 1½”

Spare part article No.	Description	Included parts	Pos.	Qty
6-9611-92-6598	Service kit, EPDM	O-ring Lip seal Plug seal O-ring Plug seal	21 25 32 34 35	6 1 1 1 1
6-9611-92-6604	Service kit, HNBR	O-ring Lip seal Plug seal O-ring Plug seal	21 25 32 34 35	6 1 1 1 1
6-9611-92-6610	Service kit, FPM	O-ring Lip seal Plug seal O-ring Plug seal	21 25 32 34 35	6 1 1 1 1
6-9612-93-9303	Clamp	-	19	4
6-9613-41-4101	Plug	-	9	1
6-9611-99-1988	Air fitting (6 mm)	-	12	1
6-9613-12-5002	Bushing	Bushing	24	1

Alternative TR2

Spare part article No.	Description	Included parts	Pos.	Qty
6-9611-92-6663	Service kit, EPDM	O-ring Lip seal Plug seal O-ring Plug seal	21 25 37 38 39	6 1 1 1 1
6-9611-92-6668	Service kit, HNBR	O-ring Lip seal Plug seal O-ring Plug seal	21 25 37 38 39	6 1 1 1 1
6-9611-92-6673	Service kit, FPM	O-ring Lip seal Plug seal O-ring Plug seal	21 25 37 38 39	6 1 1 1 1
6-9612-93-9316	Clamp	-	19	4
6-9613-41-4101	Plug	-	9	1
6-9611-99-4682	Air fitting (1/4”	-	12	1
6-9613-12-5002	Bushing	Bushing	24	1

2.2tf505008.en

DN 50 / 2”

Spare part article No.	Description	Included parts	Pos.	Qty
6-9611-92-6599	Service kit, EPDM	O-ring Lip seal Plug seal O-ring Plug seal	21 25 32 34 35	6 1 1 1 1
6-9611-92-6605	Service kit, HNBR	O-ring Lip seal Plug seal O-ring Plug seal	21 25 32 34 35	6 1 1 1 1
6-9611-92-6611	Service kit, FPM	O-ring Lip seal Plug seal O-ring Plug seal	21 25 32 34 35	6 1 1 1 1
6-9612-93-9304	Clamp	-	19	4
6-9613-41-4101	Plug	-	9	1
6-9611-99-1988	Air fitting (6 mm)	-	12	1
6-9613-12-5002	Bushing	Bushing	24	1

2.2tf505008.en

Alternative TR2

Spare part article No.	Description	Included parts	Pos.	Qty
6-9611-92-6664	Service kit, EPDM	O-ring Lip seal Plug seal O-ring Plug seal	21 25 37 38 39	6 1 1 1 1
6-9611-92-6669	Service kit, HNBR	O-ring Lip seal Plug seal O-ring Plug seal	21 25 37 38 39	6 1 1 1 1
6-9611-92-6674	Service kit, FPM	O-ring Lip seal Plug seal O-ring Plug seal	21 25 37 38 39	6 1 1 1 1
6-9612-93-9317	Clamp	-	19	4
6-9613-41-4101	Plug	-	9	1
6-9611-99-4682	Air fitting (6 mm)	-	12	1
6-9613-12-5002	Bushing	Bushing	24	1

Valve - 63.5-101.6 mm/DN65-100/2½”-4”

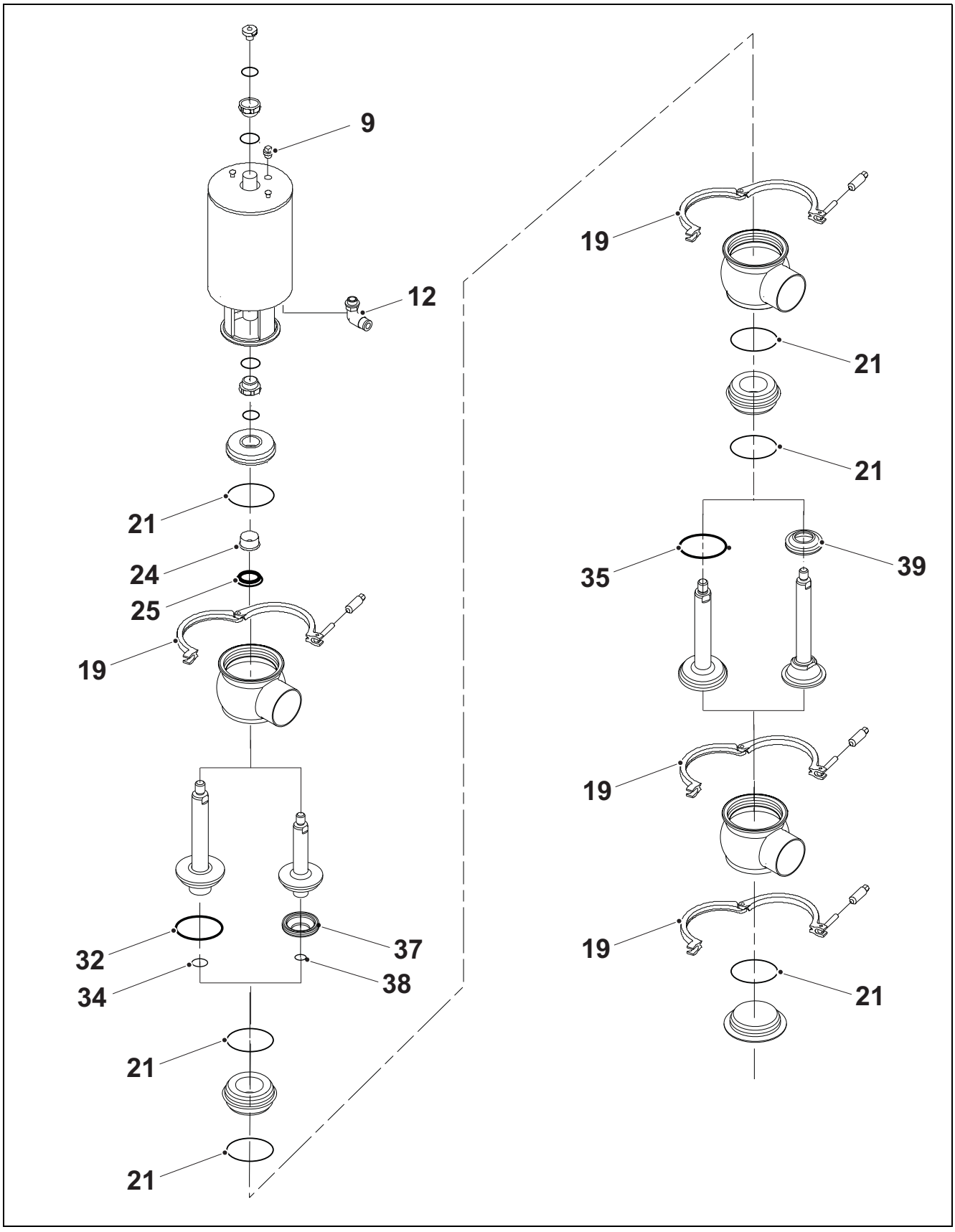

DN 65 / 2½

Spare part article No.	Description	Included parts	Pos.	Qty
6-9611-92-6600	Service kit, EPDM	O-ring Lip seal Plug seal O-ring Plug seal	21 25 32 34 35	6 1 1 1 1
6-9611-92-6606	Service kit, HNBR	O-ring Lip seal Plug seal O-ring Plug seal	21 25 32 34 35	6 1 1 1 1
6-9611-92-6612	Service kit, FPM	O-ring Lip seal Plug seal O-ring Plug seal	21 25 32 34 35	6 1 1 1 1
6-9612-93-9305	Clamp	-	19	4
6-9613-41-4101	Plug	-	9	1
6-9611-99-1988	Air fitting (6 mm)	-	12	1
6-9613-12-5002	Bushing	Bushing	24	1

2.2tf505008.en

Alternative TR2

Spare part article No.	Description	Included parts	Pos.	Qty
6-9611-92-6665	Service kit, EPDM	O-ring Lip seal Plug seal O-ring Plug seal	21 25 37 38 39	6 1 1 1 1
6-9611-92-6670	Service kit, HNBR	O-ring Lip seal Plug seal O-ring Plug seal	21 25 37 38 39	6 1 1 1 1
6-9611-92-6675	Service kit, FPM	O-ring Lip seal Plug seal O-ring Plug seal	21 25 37 38 39	6 1 1 1 1
6-9612-93-9318	Clamp	-	19	4
6-9613-41-4101	Plug	-	9	1
6-9611-99-4682	Air fitting (1/4”)	-	12	1
6-9613-12-5002	Bushing	Bushing	24	1

DN 80 / 3”

Spare part article No.	Description	Included parts	Pos.	Qty
6-9611-92-6601	Service kit, EPDM	O-ring Lip seal Plug seal O-ring Plug seal	21 25 32 34 35	6 1 1 1 1
6-9611-92-6607	Service kit, HNBR	O-ring Lip seal Plug seal O-ring Plug seal	21 25 32 34 35	6 1 1 1 1
6-9611-92-6613	Service kit, FPM	O-ring Lip seal Plug seal O-ring Plug seal	21 25 32 34 35	6 1 1 1 1
6-9612-93-9306	Clamp	-	19	4
6-9613-41-4101	Plug	-	9	1
6-9611-99-1988	Air fitting (6 mm)	-	12	1
6-9613-12-5002	Bushing	Bushing	24	1

Alternative TR2

Spare part article No.	Description	Included parts	Pos.	Qty
6-9611-92-6666	Service kit, EPDM	O-ring Lip seal Plug seal O-ring Plug seal	21 25 37 38 39	6 1 1 1 1
6-9611-92-6671	Service kit, HNBR	O-ring Lip seal Plug seal O-ring Plug seal	21 25 37 38 39	6 1 1 1 1
6-9611-92-6676	Service kit, FPM	O-ring Lip seal Plug seal O-ring Plug seal	21 25 37 38 39	6 1 1 1 1
6-9612-93-9319	Clamp	-	19	4
6-9613-41-4101	Plug	-	9	1
6-9611-99-4682	Air fitting (1/4”)	-	12	1
6-9613-12-5002	Bushing	Bushing	24	1

2.2tf505008.en

DN 100 / 4”

Spare part article No.	Description	Included parts	Pos.	Qty
6-9611-92-6602	Service kit, EPDM	O-ring Lip seal Plug seal O-ring Plug seal	21 25 32 34 35	6 1 1 1 1
6-9611-92-6608	Service kit, HNBR	O-ring Lip seal Plug seal O-ring Plug seal	21 25 32 34 35	6 1 1 1 1
6-9611-92-6614	Service kit, FPM	O-ring Lip seal Plug seal O-ring Plug seal	21 25 32 34 35	6 1 1 1 1
6-9612-93-9307	Clamp	-	19	4
6-9613-41-4101	Plug	-	9	1
6-9611-99-1988	Air fitting (6 mm)	-	12	1
6-9613-12-5002	Bushing	Bushing	24	1

2.2tf505008.en

Alternative TR2

Spare part article No.	Description	Included parts	Pos.	Qty
6-9611-92-6667	Service kit, EPDM	O-ring Lip seal Plug seal O-ring Plug seal	21 25 37 38 39	6 1 1 1 1
6-9611-92-6672	Service kit, HNBR	O-ring Lip seal Plug seal O-ring Plug seal	21 25 37 38 39	6 1 1 1 1
6-9611-92-6677	Service kit, FPM	O-ring Lip seal Plug seal O-ring Plug seal	21 25 37 38 39	6 1 1 1 1
6-9612-93-9320	Clamp	-	19	4
6-9613-41-4101	Plug	-	9	1
6-9611-99-4682	Air fitting (1/4”)	-	12	1
6-9613-12-5002	Bushing	Bushing	24	1

Actuator - optional maintainable version 25-101.6mm/DN25-100

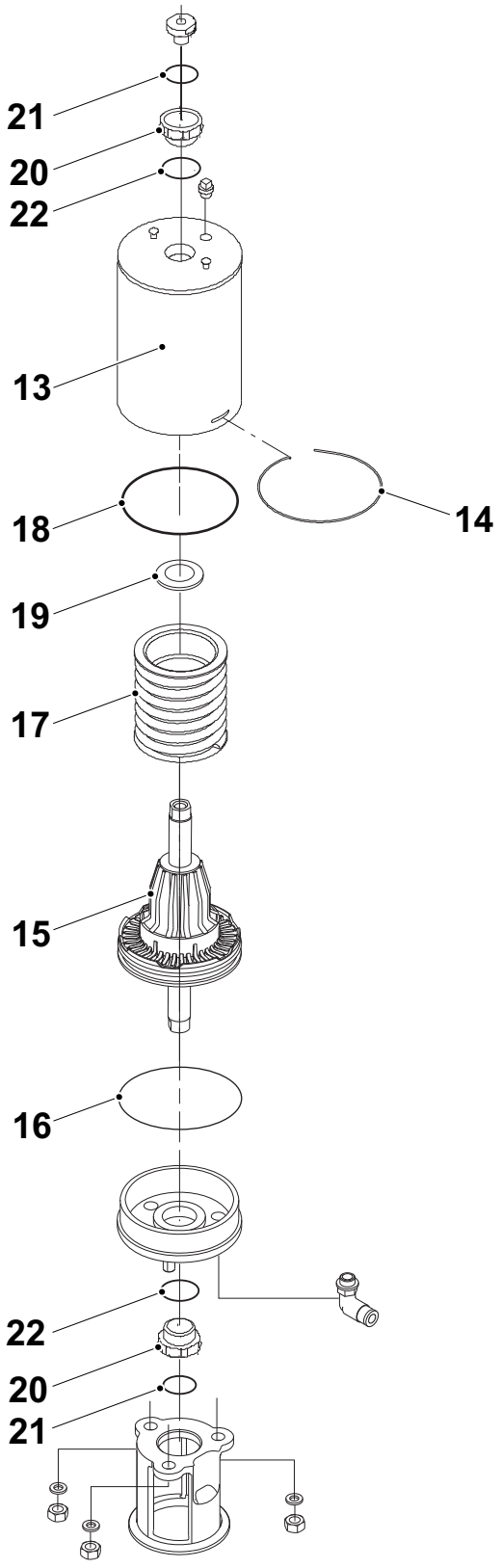

2.2tf505008.en

DN 25 - DN 40 / 1”- 1½”

Spare part article No.	Description	Included parts	Pos.	Qty
6-9613-12-5002	Actuator, complete, maintainable (NO)	-	-	1
6-9613-14-4704	Actuator, complete, maintainable (NC)	-	-	1
6-9613-14-4707	Actuator, complete, maintainable (A/A)	-	-	1
6-9613-14-4710	Actuator, complete, maintainable (NO) (USA)	-	-	1
6-9613-14-4713	Actuator, complete, maintainable (NC) (USA)	-	-	1
6-9613-14-4716	Actuator, complete, maintainable (A/A) (USA)	-	-	1
6-9611-92-6497	Service kit, NO, NC	O-ring Bushing O-ring O-ring O-ring	18 20 21 22 16	1 2 2 2 1
6-9611-92-6519	Service kit, A/A	O-ring Bushing O-ring O-ring O-ring Support disc	18 20 21 22 16 19	1 2 2 2 1 1
6-9613-14-2501	Cylinder	-	13	1
6-9613-14-2504	Cylinder (USA)	-	13	1
6-9613-13-2201	Piston	-	15	1
6-9613-14-3201	Lock wire	-	14	1
6-9613-13-2501	Spring assembly	-	17	1

2.2tf505008.en

DN 50 - DN 65 / 2”- 2½”

Spare part article No.	Description	Included parts	Pos.	Qty
6-9613-13-2501	Actuator, complete, maintainable (NO)	-	-	1
6-9613-13-2501	Actuator, complete, maintainable (NC)	-	-	1
6-9613-14-4708	Actuator, complete, maintainable (A/A)	-	-	1
6-9613-14-4711	Actuator, complete, maintainable (NO) (USA)	-	-	1
6-9613-14-4714	Actuator, complete, maintainable (NC) (USA)	-	-	1
6-9613-14-4717	Actuator, complete, maintainable (A/A) (USA)	-	-	1

Spare part article No.	Description	Included parts	Pos.	Qty
6-9611-92-6498	Service kit, NO, NC	O-ring Bushing O-ring O-ring O-ring	18 20 21 22 16	1 2 2 2 1
6-9611-92-6520	Service kit, A/A	O-ring Bushing O-ring O-ring O-ring Support disc	18 20 21 22 16 19	1 2 2 2 1 1
6-9613-14-2502	Cylinder	-	13	1
6-9613-14-2505	Cylinder (USA)	-	13	1
6-9613-13-2301	Piston	-	15	1
6-9613-14-3202	Lock wire	-	14	1
6-9613-13-2502	Spring assembly	-	17	1

DN 80 - DN 100 / 3”- 4”

Spare part article No.	Description	Included parts	Pos.	Qty
6-9613-14-4703	Actuator, complete, maintainable (NO)	-	-	1
6-9613-14-4706	Actuator, complete, maintainable (NC)	-	-	1
6-9613-14-4709	Actuator, complete, maintainable (A/A)	-	-	1
6-9613-14-4712	Actuator, complete, maintainable (NO) (USA)	-	-	1
6-9613-14-4715	Actuator, complete, maintainable (NC) (USA)	-	-	1
6-9613-14-4718	Actuator, complete, maintainable (A/A) (USA)	-	-	1
6-9611-92-6499	Service kit, NO, NC	O-ring Bushing O-ring O-ring O-ring	18 20 21 22 16	1 2 2 2 1
6-9611-92-6521	Service kit, A/A	O-ring Bushing O-ring O-ring O-ring Support disc	18 20 21 22 16 19	1 2 2 2 1 1
6-9613-14-2503	Cylinder	-	13	1
6-9613-14-2506	Cylinder (USA)	-	13	1
6-9613-13-2401	Piston	-	15	1
6-9613-14-3203	Lock wire	-	14	1

2.2tf505008.en

Spare part article No.	Description	Included parts	Pos.	Qty
6-9613-13-2503	Spring assembly	-	17	1

NO = Normally Open
NC = Normally Closed
A/A = Air / Air, pneumatic upward and downward movement.

2.2tf505008.en

Actuator - standard version 25-101.6mm/DN25-100

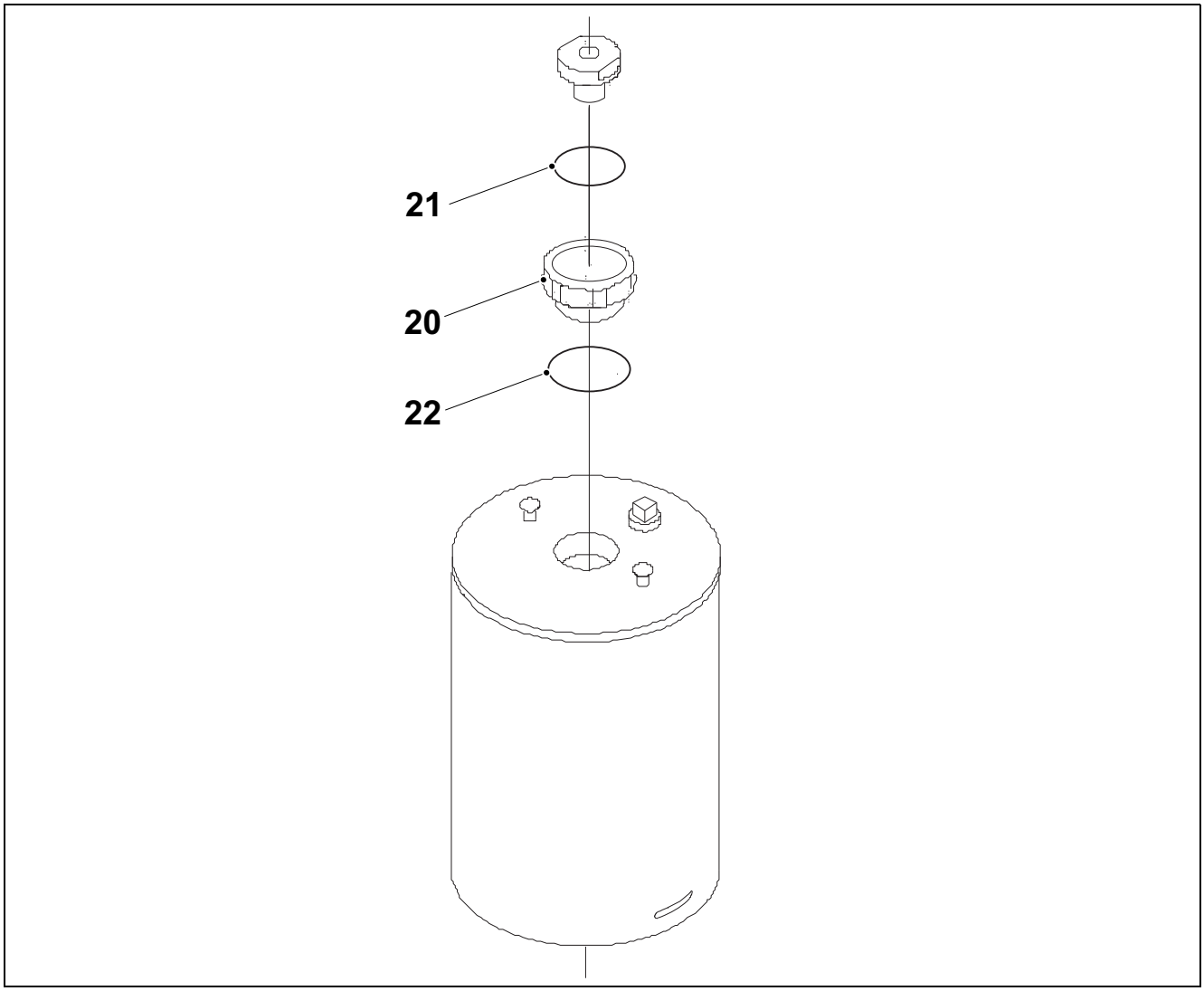

DN 25 - DN 40 / 1”- 1½”

Spare part article No.	Description	Included parts	Pos.	Qty
6-9613-15-4801	Actuator, complete (NO)	-	-	1
6-9613-15-4806	Actuator, complete (NC)	-	-	1
6-9613-15-4811	Actuator, complete (A/A)	-	-	1
6-9613-15-4831	Actuator, complete (NO) (USA)	-	-	1
6-9613-15-4836	Actuator, complete (NC) (USA)	-	-	1
6-9613-15-4841	Actuator, complete (A/A) (USA)	-	-	1
6-9611-92-6500	Service kit	Bushing O-ring O-ring	20 21 22	2 2 2

DN 50 - 2”

Spare part article No.	Description	Included parts	Pos.	Qty
6-9613-15-4802	Actuator, complete (NO)	-	-	1
6-9613-15-4807	Actuator, complete (NC)	-	-	1
6-9613-15-4812	Actuator, complete (A/A)	-	-	1
6-9613-15-4832	Actuator, complete (NO) (USA)	-	-	1
6-9613-15-4837	Actuator, complete (NC) (USA)	-	-	1
6-9613-15-4837	Actuator, complete (A/A) (USA)	-	-	1
6-9611-92-6500	Service kit	Bushing O-ring O-ring	20 21 22	2 2 2

DN 65 - 2½”

Spare part article No.	Description	Included parts	Pos.	Qty
6-9613-15-4803	Actuator, complete (NO)	-	-	1
6-9613-15-4808	Actuator, complete (NC)	-	-	1
6-9613-15-4813	Actuator, complete (A/A)	-	-	1
6-9613-15-4833	Actuator, complete (NO) (USA)	-	-	1
6-9613-15-4838	Actuator, complete (NC) (USA)	-	-	1
6-9613-15-4843	Actuator, complete (A/A) (USA)	-	-	1
6-9611-92-6500	Service kit	Bushing O-ring O-ring	20 21 22	2 2 2

2.2tf505008.en

DN 80 - 3”

Spare part article No.	Description	Included parts	Pos.	Qty
6-9613-15-4804	Actuator, complete (NO)	-	-	1
6-9613-15-4809	Actuator, complete (NC)	-	-	1
6-9613-15-4814	Actuator, complete (A/A)	-	-	1
6-9613-15-4834	Actuator, complete (NO) (USA)	-	-	1
6-9613-15-4839	Actuator, complete (NC) (USA)	-	-	1
6-9613-15-4844	Actuator, complete (A/A) (USA)	-	-	1
6-9611-92-6500	Service kit	Bushing O-ring O-ring	20 21 22	2 2 2

DN 100 - 4”

Spare part article No.	Description	Included parts	Pos.	Qty
6-9613-15-4805	Actuator, complete (NO)	-	-	1
6-9613-15-4810	Actuator, complete (NC)	-	-	1
6-9613-15-4815	Actuator, complete (A/A)	-	-	1
6-9613-15-4835	Actuator, complete (NO) (USA)	-	-	1
6-9613-15-4840	Actuator, complete (NC) (USA)	-	-	1
6-9613-15-4845	Actuator, complete (A/A) (USA)	-	-	1
6-9611-92-6500	Service kit	Bushing O-ring O-ring	20 21 22	2 2 2

2.2tf505008.en

Tools

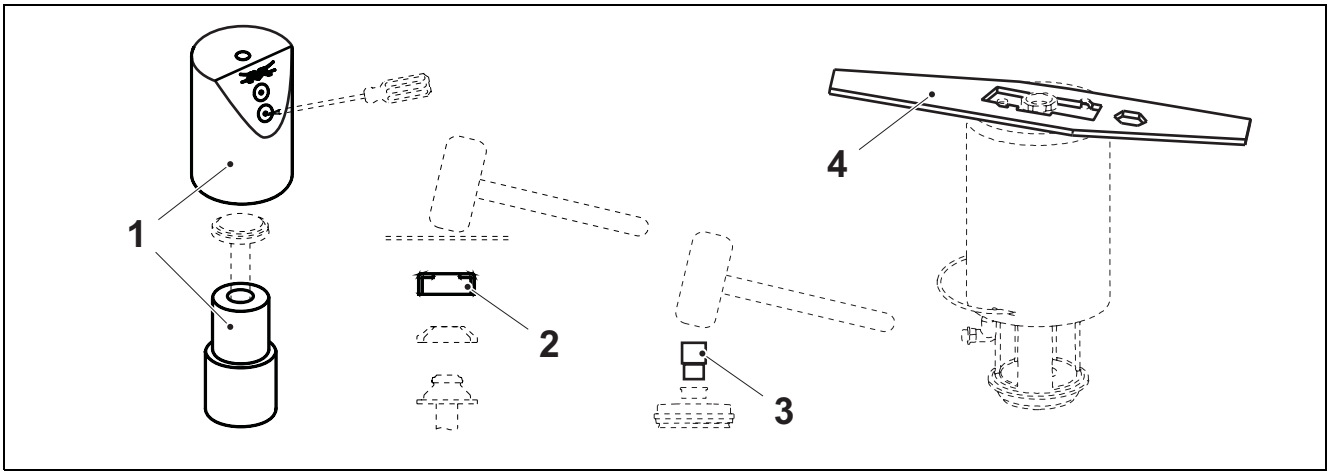

Tool article No.	Size	Description	Pos.	Qty
6-9613-17-2901	DN/OD38	Mounting tool, not for aseptic valve	1	1
6-9613-17-2902	DN/OD51-63.5			
6-9613-17-2903	DN/OD76.1-101.6			
6-9614-06-0001	DN/OD25	Aseptic valve, mounting tool		
6-9614-06-0002	DN/OD38			
6-9614-06-0003	DN/OD51-63.5			
6-9614-06-0004	DN/OD76.1-101.6			
6-9613-16-3206	DN/OD25	Mounting tool for TR2 plugs	2	1
6-9613-16-3201	DN/OD40			
6-9613-16-3202	DN/OD50			
6-9613-16-3203	DN/OD65			
6-9613-16-3204	DN/OD80			
6-9613-16-3205	DN/OD100			
6-9613-16-0901	DN/OD25-101.6	Bushing tool	3	1
6-31353-0219-1	DN/OD25-63.5	Actuator dismantling tool	4	1
6-9612-45-4001	DN/OD76.1-101.6			

2.2tf505008.en

Tetra Pak

Maintenance & Spare Parts

Flow Restrictor
(Kobold)
REG



1.0 1221586-0101.fro

Tetra Pak

Doc No. 1221586-0101

Flow Restrictor

REG

Article No.	Connection	Material	Capacity L/Min
90503-8200	G 1/2	REG-1200-D	0,5
90503-8201	G 1/2	REG-1201-D	1,0
90503-8202	G 1/2	REG-1202-D	2,0
90503-8203	G 1/2	REG-1203-D	3,0
90503-8204	G 1/2	REG-1204-D	4,0
90503-8205	G 1/2	REG-1206-D	6,0
90503-8206	G 1/2	REG-1208-D	8,0
90503-8207	G 1/2	REG-1210-D	10,0
90503-8208	G 1/2	REG-1212-D	12,0
90503-8209	G 1/2	REG-1216-D	16,0
90503-8230	G 1/4	REG-1200-D	0,5
90503-8231	G 1/4	REG-1201-D	1,0
90503-8232	G 1/4	REG-1202-D	2,0
90503-8233	G 1/4	REG-1203-D	3,0
90503-8234	G 3/8	REG-1204-D	4,0
90503-8235	G 3/8	REG-1206-D	6,0
90503-8236	G 3/8	REG-1208-D	8,0
90503-8237	G 3/8	REG-1210-D	10,0

1.0 1221586-0101.fro

Version 02 Issue 2013-11

Doc No. 1221586-0101

Tetra Pak

Tetra Pak Processing Systems AB

Table of contents

Function Description 1

Flow Restrictor 1

General 1

Change the Flow Restrictor 2

Set the Flow Restrictor 3

Check the Throughput 4

Spare Parts 5

Not applicable for this component! 5

1.0 1221586-0101.TOC

This page intentionally left blank

Function Description

Flow Restrictor

General

The adjustable Flow restrictor is designed to control and maintain a constant flow rate. Constant flow is achieved by two stainless steel diaphragms that are crosswise mounted and riveted together. The gap between between the spring-loaded stainless steel plate and seal face is continuously varied as the differential pressure changes. As the differential pressure decreases the gap widens, and it closes as the pressure increases, thus maintaining a constant flow volume through the device.

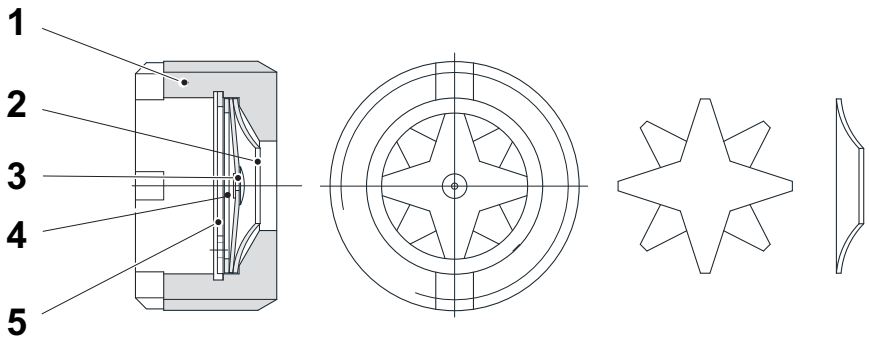

2.2tf505232.en

1 Valve body
2 Pan
3 Spring star
4 Ring
5 Circlip

Change the Flow Restrictor

WARNING!

Risk of injury!
Make sure that the pipeline is drained and free from media before servicing the flow restrictor!
Never service the flow restrictor when it is hot!

Disassemble

Loosen old Flow restrictor and replace with a new one.

Assemble in reverse order.

2.2tf505232.en

Set the Flow Restrictor

WARNING!

Risk of injury!
Make sure that the pipeline is drained and free from media before servicing the flow restrictor!
Never service the flow restrictor when it is hot!

The throughput is calculated by adding the regulating inserts. For example the throughput 55 L/Min is obtained with one restrictor with two regulating inserts (30 plus 25 L/Min).

2.2tf505232.en

Check the Throughput

Throughput value should be checked after 6000 hours of operation. See the table below for the correct value.

Throughput L/min	Tolerance L/min	Type
0.5	± 0.2	REG-xx00
1	± 0.2	REG-xx01
2	± 0.2	REG-xx02
3	± 0.4	REG-xx03
4	± 0.4	REG-xx04
5	± 0.5	REG-xx05
6	± 0.5	REG-xx06
8	± 0.5	REG-xx08
9	± 0.7	REG-xx09
10	± 0.7	REG-xx10
11	± 0.7	REG-xx11
12	±0.7	REG-xx12
16	± 1.2	REG-xx16

2.2tf505232.en

Spare Parts

Not applicable for this component!

2.2TF000880.en

Tetra Pak

Maintenance & Spare Parts

Reducing Valve
(TLV)
DR20



1.0 1221734-0101.fro

Tetra Pak

Doc No. 1221734-0101

Reducing Valve

DR20

Article No.	Size	Pressure	Kvs
90503-5588	DN 20	1.8-6.0 bar	2,6
90503-3362	G3/4”	0.14-2.0 bar	2,6
90511-3918	1” NPT	2-30 psig	3,1

1.0 1221734-0101.fro

Version 02 Issue 2009-04

Doc No. 1221734-0101

Tetra Pak

Tetra Pak Processing Systems AB

Table of contents

Function 1

Maintenance 2

Overview DR20 2

Cleaning 3

Spare Parts 4

Not applicable for this component! 4

1.0 1221734-0101.TOC

This page intentionally left blank

Function

The body is constructed of stainless steel to prevent the problems caused by rust and the resultant build-up of scale.

A single DR20 is capable of reduction to minute pressures normally requiring 2-stage pressure reduction.

A more stable secondary pressure than with conventional direct-acting reducing valves is maintained through the use of a flat valve.

The grip handle and a small-pitch adjusting screw make it possible to make extremely small adjustments in the secondary pressure. The locknut prevents accidental adjustment.

No special tools are required for maintenance. Reusable gaskets are made from PTFE.

2.2tf505327.en

Maintenance

Overview DR20

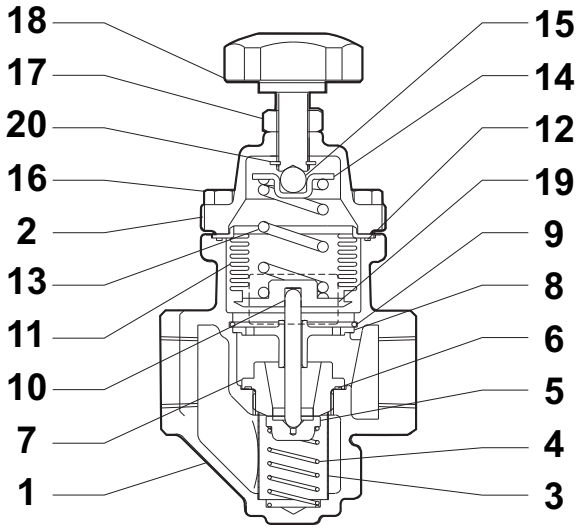

1	Body	11	Bellows
2	Cover	12	Cover Gasket
3	Screen	13	Coil Spring
4	Coil Spring	14	Spring Guide
5	Main Valve	15	Steel Ball
6	Valve Seat Gasket	16	Cover Bolt
7	Valve Seat	17	Locknut
8	Spacer	18	Adjustment Handle
9	Snap Ring	19	Nameplate
10	Valve Stem	20	Retaining Ring

2.2tf505327.en

Cleaning

Caution! To avoid abnormal operation, accidents or serious injury, DO NOT use this product outside of the specification range.

a) Disassemble the valve

b) Clean all internal parts.

c) Check for damage to internal parts.

d) Assemble in reverse order.

2.2tf505327.en

Spare Parts

Not applicable for this component!

2.2TF000880.en

This page intentionally left blank

2.2TF000880.en

Tetra Pak

Maintenance & Spare Parts

Indication unit

(Alfa Laval)

IndiTop



1.0 1221736-0101.fro

Tetra Pak

Doc No. 1221736-0101

Indication unit

IndiTop

This document refers to components specified in Technical Manual, on Maintenance & Spare Parts CD/DVD or on Tetra Pak Intranet.

1.0 1221736-0101.fro

Version 03 Issue 2014-06

Doc No. 1221736-0101

Tetra Pak

Tetra Pak Processing Systems AB

Table of contents

General 1

Function description 1

Maintenance 2

Mounting and programming 2

Electrical connections 4

Spare Parts 6

Not applicable for this component! 6

1.0 1221736-0101.TOC

This page intentionally left blank

General

Function description

General information

The indication unit IndiTop from Alfa Laval is designed as a simple and easy to use, electrical feedback unit for Alfa Laval sanitary valves. It is compatible with all major PLC (Programmable Logic Controller) digital input cards. It is for use in food, dairy and brewery installations and in biopharmaceutical applications. The unit is mounted on the valve actuator “mushrooms” with two Allen screws and on the valve stem. Once it has been set up, either by the quick and easy “5 push setup” or remotely from the PLC, the unit will be able to send feedback about the valve position through a fixed cable.

Sensor System

IndiTop is a unique “No Touch” sensor system without any mechanical adjustments. A magnet is mounted on the valve stem and the magnetic field (axial) is detected by sensor chips inside the sensor unit. The measuring angle from each chip is used to locate the current position of the valve stem with an accuracy of ± 1mm. Note that the distance to the magnet can be 5 mm ± 3 mm.

2.2tf505330.en

Feedback Signals

IndiTop is capable of providing two 2 PNP/NPN digital feedback signals in both DC and AC. Selection of PNP or NPN is done by wiring. Visual indication through LEDs is constantly displaying the current valve position and power (ON/OFF).

Maintenance

Mounting and programming

Mounting Instructions

a) Fix the magnet on top of the actuator.

b) Fit IndiTop over the magnet and the “mushrooms”-front opposite air fitting.

c) Carefully fix IndiTop with the two Allen screws, while pressing down.

d) Connect the wires according to the instructions in chapter: Electrical connections.

Push button setup

a) To enter SETUP press and hold “SP2” + “Enter” until the blue LED starts to flash (3 seconds).

b) Clear previous saved positions by pressing “Enter” until all the LEDs have turned ON in a sequence (blue-green-yellow) and flashed once (3 seconds).

c) De-energize the valve and save the 1st Point “SP1” (de-energized) by pressing the “SP1” button until “SP1” LED becomes steady ON (3 seconds).

Note! Set point 1 (SP1) is intended to be the return position of the valve in case of a power breakdown, i.e. de-energized.

d) Energize the valve and save the 2nd Set Point “SP2” (energized) by pressing the “SP2” button until “SP2” LED becomes steady ON (3 seconds).

Note! Set point 2 is intended to be the opposite of SP1, i.e. energized.

e) To exit SETUP press and hold “SP2” + “Enter” until the blue LED becomes steady (3 seconds).

f) Verify the saved positions by energizing/de-energizing the valve and see if the correct LED is lit (SP1 = de-energized, SP2 = energized).

2.2tf505330.en

Remote set-up

The sequence in the flow chart below must be followed in the programming in order to do a successful remote setup.

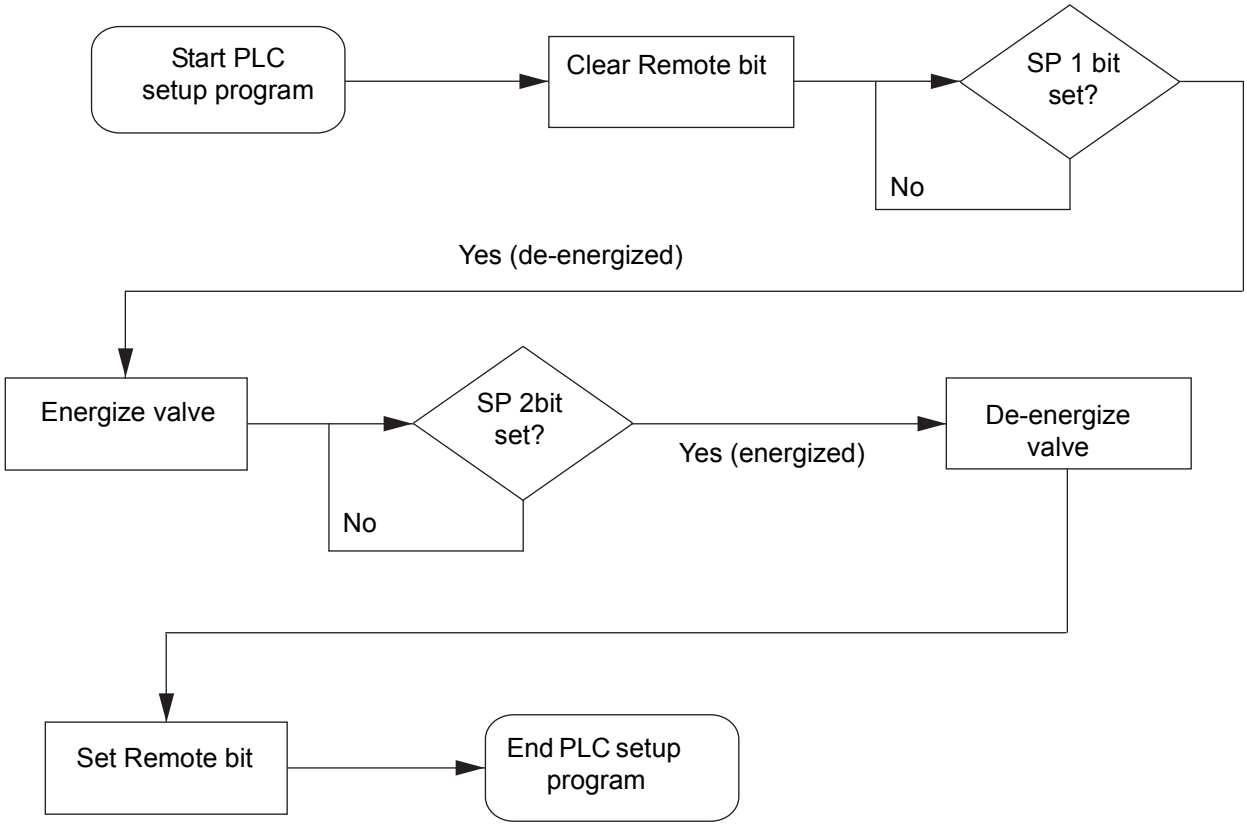

2.2tf505330.en

Note! The remote setup can be done in two ways: Either by a simple PLC program or by manual bit (tag) control. In both cases, the flow chart must be followed to ensure the right feedback.

Note! The “Remote Setup Bit” must always be connected to +/L1 if the remote setup feature is not used.

Electrical connections

The fixed cable consists of 6 wires. For standard 2 feedback not using the remote setup feature only 4 wires need to be connected to external systems (Red/Black/Green/Yellow). Brown is always connected to either Red (PNP) or Black (NPN) depending on whether PNP or NPN is required. The orange wire must be connected to Red if the remote setup feature is not used.

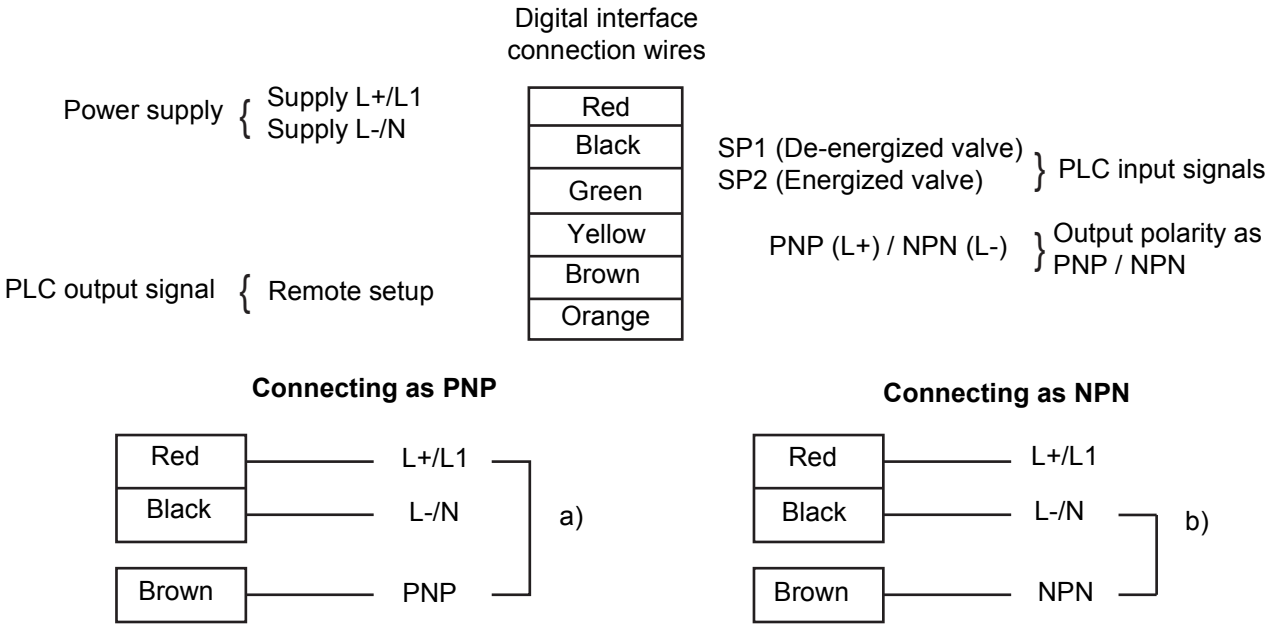

2.2tf505330.en

a) Brown connected with Red wire on external screw terminals if PNP polarity.
b) Brown connected with Black wire on external screw terminals if NPN polarity.

Cable wire connections	
Red	L+/L1
Black	L-/N
Green	SP1 (De-energized valve)
Yellow	SP2 (Energized valve)
Brown	PNP (L+) / NPN (L-)
Orange	Remote setup signal If not used - connect to L+/L1

(Cont'd)

(Cont'd)

M12 plug - PIN connections		
PIN 1	Black	L-/N
PIN 2	Yellow	SP2 (Energized valve)
PIN 3	Green	SP1 (De-energized valve)
PIN 4	Red	L+/L1, 8-30V AC/DC
M12 Plug Internal wire connections	Brown	PNP (L+) PIN 4 NPN (L-) PIN 1
PIN 5	Orange	Remote setup signal If not used - connect to L+/L1

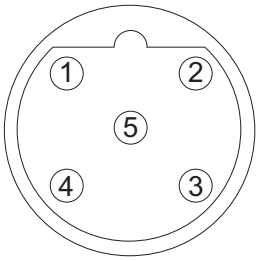

2.2tf505330.en

Spare Parts

Not applicable for this component!

2.2TF000880.en

This page intentionally left blank

2.2TF000880.en

Tetra Pak

Maintenance & Spare Parts

Unique Single Seat Valve, Aseptic

(Alfa Laval Flow)
SSV Stop valves



1.0 1222444-0101.fro

Tetra Pak

Doc No. 1222444-0101

Unique Single Seat Valve, Aseptic

SSV Stop valves

This document refers to components specified in Technical Manual, on Maintenance & Spare Parts CD/DVD or on Tetra Pak Intranet.

1.0 1222444-0101.fro

Version 03 Issue 2013-09

Doc No. 1222444-0101

Tetra Pak

Tetra Pak Processing Systems AB

General 1

Function description. 1

Maintenance 2

Pre-use check 2

Valve 3

Disassemble valve 3

Assemble valve 6

Actuator, optional maintainable version 9

Change spare part kit 9

Actuator, both standard and optional maintainable version. 12

Actuator bushing replacement 12

Cleaning 13

Troubleshooting 15

Spare parts 16

Valve 16

Actuator - optional maintainable version. 20

Actuator - standard version 24

1.0 1222444-0101.TOC

This page intentionally left blank

General

Function description

The Unique Single Seat Valve, shut-off version, is an air-operated seat valve in a sanitary and flexible design giving a wide field of applications, e.g. as a shut-off valve with two or three ports.

The valve is remote-controlled by means of compressed air. To reduce the wear of seals there is a controlled compression of seals by metal to metal contact. The actuator is connected to the valve body using a yoke and all components are assembled with clamp rings.

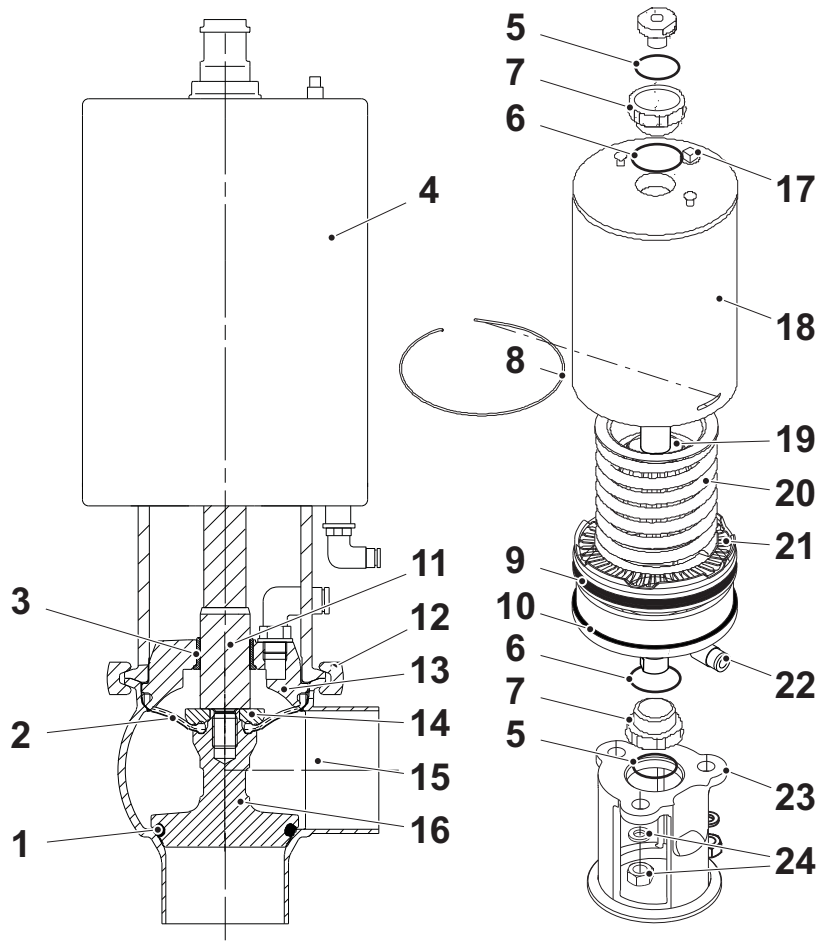

2.2tf505557.en

1 Plug seal
2 Diaphragm
3 Bushing
4 Actuator
5 O-ring 2 pcs
6 O-ring 2 pcs
7 Bushing 2 pcs
8 Lock wire
9 O-ring
10 O-ring
11 Spindle
12 Clamp
13 Bonnet
14 Diaphragm disc
15 Valve body
16 Valve plug
17 Plug
18 Cylinder
19 Support disc
20 Spring assembly
21 Piston
22 Air fitting
23 Yoke
24 Nut with washer 3 pcs

Maintenance

Pre-use check

WARNING!

Risk of injury!
Never service the valve when it is hot.
Never service the valve with valve and pipelines under pressure.
Never stick your fingers through the valve ports if the actuator is supplied with compressed air.
Never touch the clip assembly or the actuator piston rod if the actuator is supplied with compressed air.
Always release the compressed air after use.
Always remove the CIP connections, if supplied, before service.

Note! Check the valve for smooth operation after service.

a) Supply compressed air to the actuator.

b) Operate the valve several times to ensure that it operates smoothly.

Note! Pay special attention to the warnings!

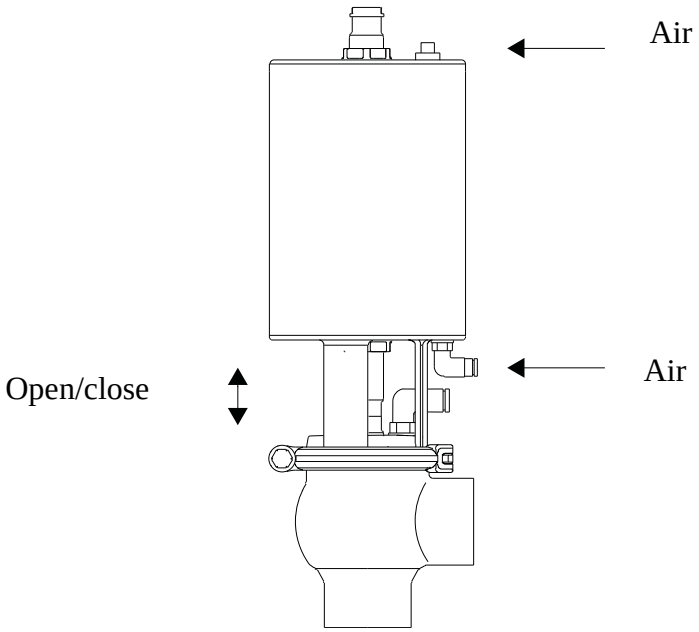

2.2tf505557.en

Valve

Disassemble valve

WARNING!

Risk of injury!
- Never service the valve when it is hot.
- Never service the valve with valve and pipelines under pressure.
- Make sure that the pipeline is drained and free from media before servicing the valve.
- The valve and pipelines must **never** be pressurised when serviced.
- Never stick your fingers through the valve ports if the actuator is supplied with compressed air.
- Never touch the clip assembly or the actuator piston rod if the actuator is supplied with compressed air.
- Always release compressed air after use.

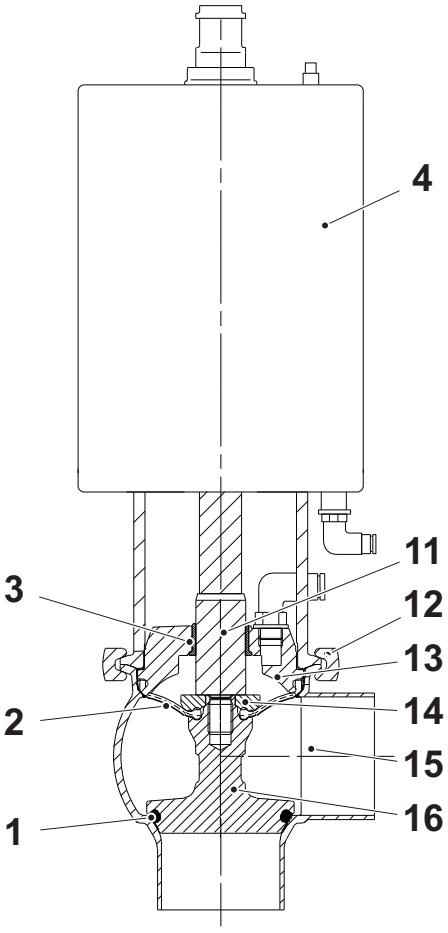

1 Plug seal
2 Diaphragm
3 Bushing
4 Actuator
11 Spindle
12 Clamp
13 Bonnet
14 Diaphragm disc
15 Valve body
16 Valve plug

(Cont'd)

2.2tf505557.en

(Cont'd)

NO: Normally open
NC: Normally closed
A/A: Air/air activated

Note! When dismounting the valve always mark the position of actuator (4) and the valve body (15). This makes the reassembling much easier, as the valve can be mounted up in the workshop in the same position.

Caution! Remember NOT to dismount the clamp (12) unless the plug stays in the upper position, as the diaphragm then will be destroyed if the plug moves downwards.

a) Ensure that the actuator stem is in upper position and then loosen the clamp (12).

b) Lift away the actuator (4).

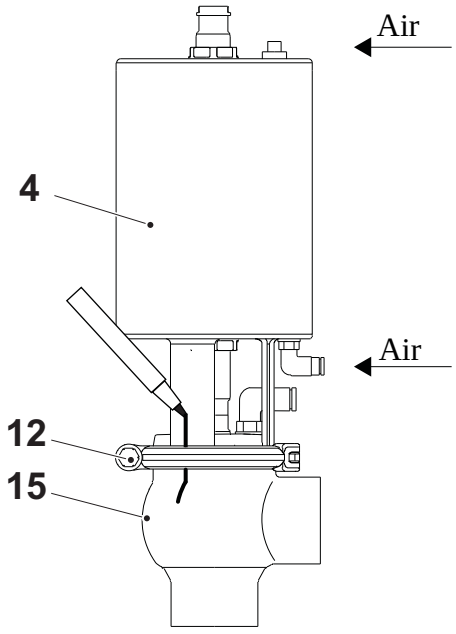

4 Actuator
12 Clamp
15 Valve body

2.2tf505557.en

(Cont'd)

(Cont'd)

c) Ensure actuator stem is in upper position and loosen the spindle (11) from the actuator (4). Use 17 mm spanners.

d) Disassemble the spindle (11) from the plug (16).

e) Remove the diaphragm (2) by hand.

f) Remove old plug seals (1) using a knife, screwdriver or similar. Be careful not to damage metal parts.

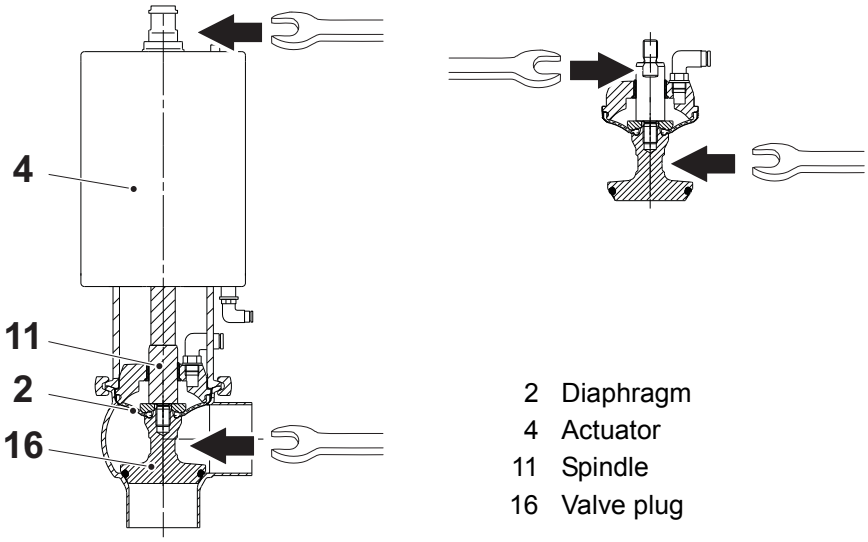

2 Diaphragm
4 Actuator
11 Spindle
16 Valve plug

2.2tf505557.en

Note! The bushing (3) does not normally need to be replaced.

g) Disassemble the bushing (3) by using a bushing tool and a rubber mallet.

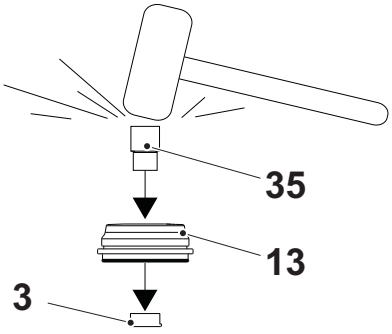

3 Bushing
13 Bonnet
35 Bushing tool

Assemble valve

a) Fit a new bushing (3) in the bonnet (13) if applicable.

Note! Use grease ”Paraliq GTE 703” round edge of the bonnet, before mounting the diaphragm.

b) Put the diaphragm disc (14) in the bonnet, with the plane disc side towards the bonnet bushing (3).

c) Fit diaphragm (2) to the bonnet (13). Press only with the fingers. Be sure that diaphragm is correctly fitted on the “round edge” on the bonnet.

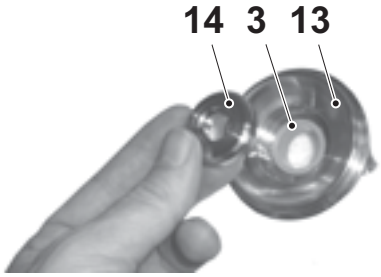

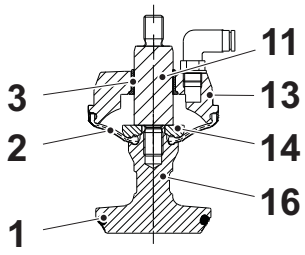

1	Plug seal 2 pcs	11	Spindle
2	O-ring 2 pcs	13	Bonnet
3	Diaphragm	14	Diaphragm disc
4	Bushing	16	Valve plug

2.2tf505557.en

d) Pre-mount plug seal (1) without pressing it into the groove. See working methods with or without mounting tool, below.

(Cont'd)

(Cont'd)

With mounting tool

e) Put the plug (16) in the lower part (30) of the mounting tool.

f) Put the upper part of mounting tool (31) over the plug and press down.

g) The seal will be visible in one of the bores (32). Very carefully insert a narrow screwdriver just under the seal (1).

h) Carefully press the screwdriver down, in order to release compressed air behind the seal (1).

Without mounting tool

i) Squeeze plug seal (1) into the groove using opposite pressure points.

j) Release compressed air behind plug seal (1).

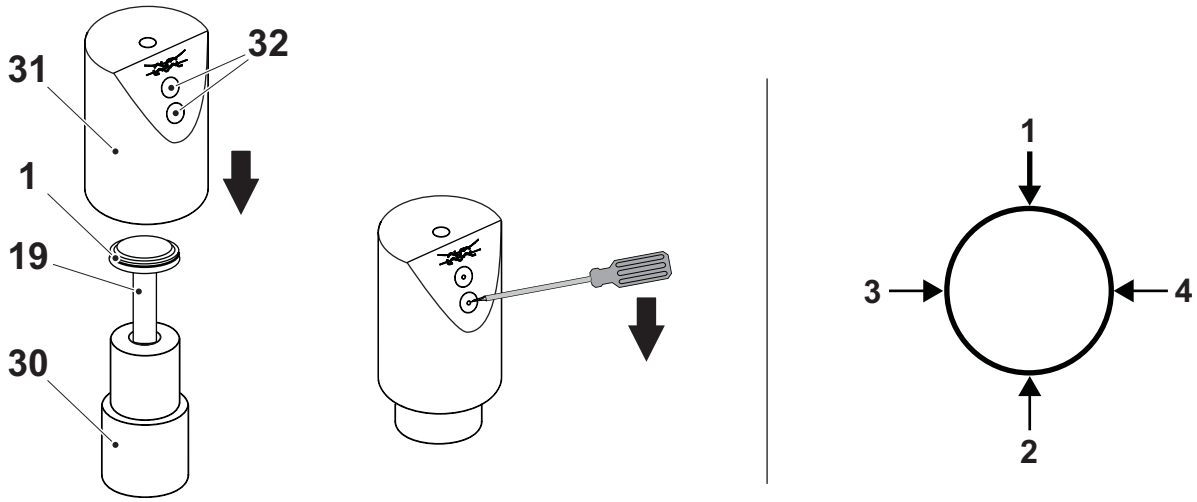

2.2tf505557.en

1 Plug seal
19 Plug
30 Mounting tool, lower part
31 Mounting tool, upper part
32 Bores

(Cont'd)

(Cont'd)

k) Apply “Loctite 243” on the plug thread.

Note! Be careful not to spill a drop outside the threaded hole, as this will glue the disc and plug together.

l) Fit the spindle (11) and the bonnet (13) on the plug (16). Be sure that the diaphragm disc (14) is placed correctly on the plug (16) while screwing spindle and plug together. Tighten the spindle and plug according to torque table below. Use 17 mm spanners.

m) Assemble the plug (16) with the spindle (14) to the actuator (4). Use 17 mm spanners on the plug stem and actuator stem. Tighten according to torque table below.

Size		Torque
D25 - DN40	1” - 1½”	15 Nm
DN50 - DN100	2” - 4”	33 Nm

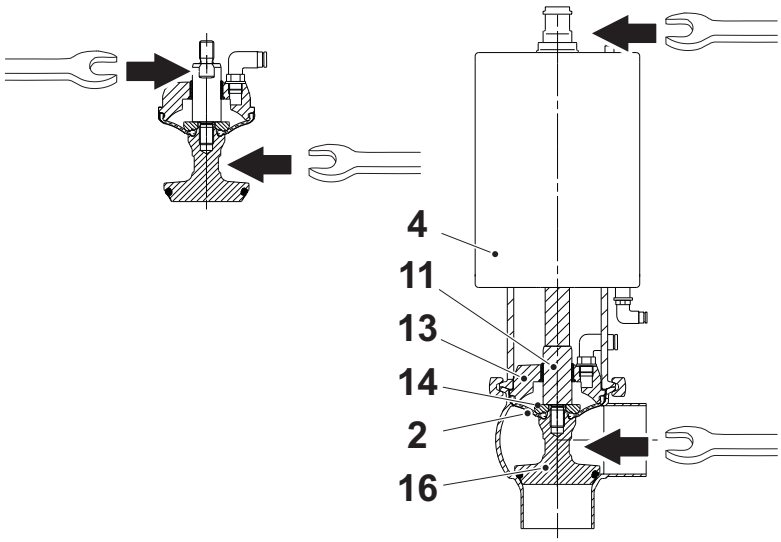

2.2tf505557.en

n) Lubricate the edges of the valve body with ”Paraliq GTE 703” to ensure correct mounting of the diaphragm. The sealing surface must be clean to avoid leakage.

o) Ensure that the actuator is in upper position and place it on the valve body.

p) Align valve body and actuator, according to the marks that were done before disassembly.

q) Assemble the clamp and tighten with a torque of 12 Nm.

Actuator, optional maintainable version

Change spare part kit

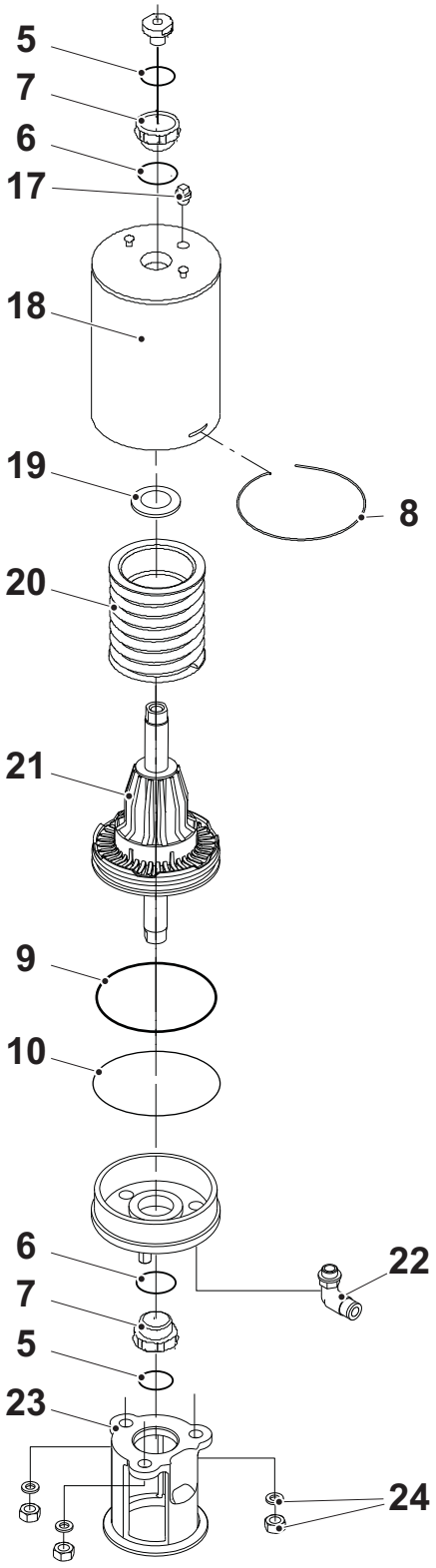

5 O-ring 2 pcs
6 O-ring 2 pcs
7 Bushing
8 Lock wire
9 O-ring
10 O-ring
17 Plug
18 Cylinder
19 Support disc
20 Spring assembly
21 Piston
22 Air fitting
23 Yoke
24 Nut with washer 3 pcs

2.2tf505557.en

WARNING!

Dismantling/Assembly

Risk of injury!

- Make sure that the pipelines are drained and free from media before servicing the valve!
- **Never** service the valve when it is hot!
- **Never** service the valve with valve and pipelines under pressure.
- **Always** release compressed air after use.
- **Never** touch the clip assembly or the actuator piston rod if the actuator is supplied with compressed air.
- **Never** put your fingers through the valve ports if the actuator is supplied with compressed air!

Note! NC = Normally closed.

NO = Normally open.

A/A = Air/air activated

a) Rotate cylinder (18).

b) Remove lock wire (8) and pull away cylinder (18).

c) Unscrew nuts and remove yoke.

d) Unscrew top and bottom bushings (7).

e) Remove piston (21) with O-ring (9) and spring assembly (20).

f) Remove O-ring (10) and support disc (19).

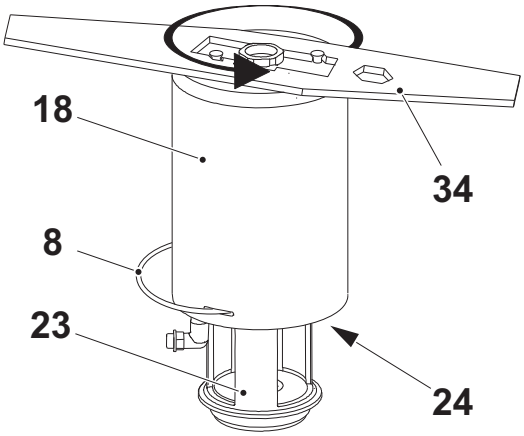

8 Lock wire
18 Cylinder
23 Yoke
24 Nut with washer 3 pcs
34 Actuator dismantling tool

2.2tf505557.en

Note! The A/A actuator has no spring assembly.

(Cont'd)

(Cont'd)

Assembly

Assembly of the actuator is made in the reverse order to dismantling.

Note! Lubricate O-rings (9) and (10) with Molykote Longterm 2 plus before fitting.

2.2tf505557.en

Actuator, both standard and optional maintainable version

Actuator bushing replacement

a) Unscrew and remove top and bottom bushings (20) with O-rings (21) and (22).

b) Lubricate O-rings (21) and (22) with Molykote Longterm 2 plus before fitting.

c) Fit bushings (20) and O-rings (21) and (22). Be careful not to overtighten.

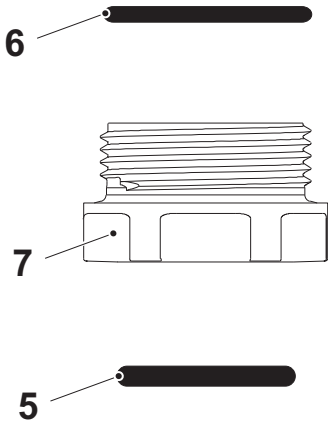

5 O-ring 2 pcs
6 O-ring 2 pcs
7 Bushing

2.2tf505557.en

Cleaning

DANGER!

Risk of injury!
Always handle lye and acid with great care!
Always use rubber gloves!
Always use protective goggles!

WARNING!

Risk of burning!
Never touch the valve or the pipelines when sterilizing.

WARNING!

Risk of injury!
Always rinse well with clean water after the cleaning.

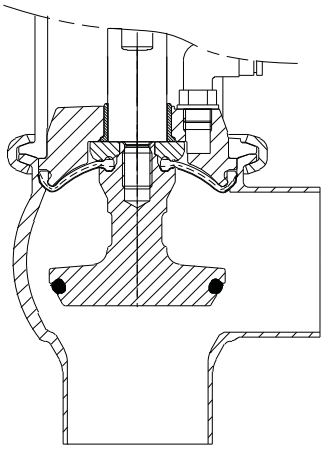

2.2tf505557.en

Note! The cleaning agents must be stored/discharged in accordance with current rules/directives.

Note! Avoid excessive concentration of the cleaning agent, dose gradually.

Note! Adjust the cleaning flow to the process.

(Cont'd)

(Cont'd)

Examples of cleaning agents:

Use clean water, free from chlorides.

– 1% by weight NaOH at 70°C.

1 kg NaOH + 100 litre water = Cleaning agent

2.2 litre 33% NaOH + 100 litre water = Cleaning agent

– 0.5% by weight HNO_3 at 70°C.

0.7 litre 53% HNO3 + 100 litre water = Cleaning agent

NaOH = Caustic soda
HNO_3= Nitric acid

2.2tf505557.en

Troubleshooting

Problem	Cause	Action
External product leakage	- Worn or product-affected diaphragm and/or O-ring	- Replace the seals - Replace with seals of a different rubber grade
Internal product leakage	- Worn or product-affected plug seal - Product deposits on the seat and/or plug - Product pressure exceeds actuator specification	- Replace the seal - Frequent cleaning - Replace with a high pressure actuator - Use auxiliary air on the spring side - Reduce product pressure
Water hammer	- The flow direction is the same as the closing direction	- The flow direction should be against the closing direction - Throttle air release of solenoid in top unit
The valve does not open/close	- Product pressure exceeds actuator specification	- Replace with a high-pressure actuator - Use auxiliary air on the spring side - Reduce product pressure

2.2tf505557.en

Spare parts

Valve

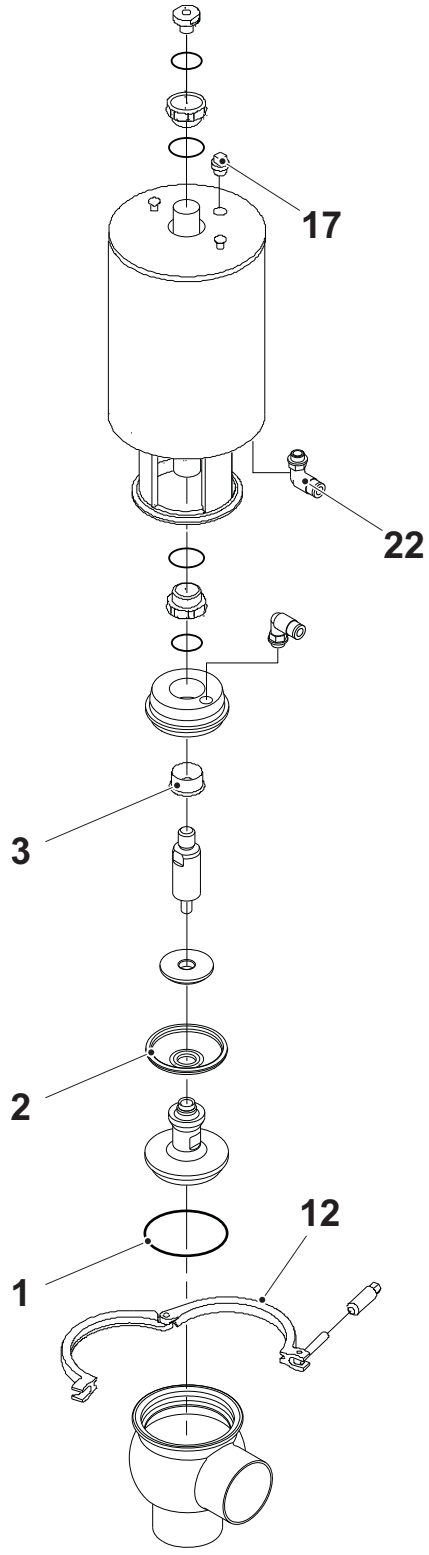

1.0 tf505558.en

DN 25 / 1”

Spare part article No.	Description	Included parts	Pos.	Qty
6-9611-92-6543	Service kit, EPDM	Diaphragm Plug seal	2 1	1 1
6-9611-92-6549	Service kit, HNBR	Diaphragm Plug seal	2 1	1 1
6-9611-92-6555	Service kit, FPM	Diaphragm Plug seal	2 1	1 1
6-9612-9393-03	Clamp (DN 25)	-	12	1
6-9612-9393-16	Clamp (1”)	-	12	1
6-9613-4141-01	Plug	-	17	1
6-9611-99-1988	Air fitting (DN 25)	-	22	1
6-9611-99-4682	Air fitting (1”)	-	22	1
6-9613-1250-02	Bushing	-	3	1

DN 40 / 1½”

Spare part article No.	Description	Included parts	Pos.	Qty
6-9611-92-6544	Service kit, EPDM	Diaphragm Plug seal	2 1	1 1
6-9611-92-6550	Service kit, HNBR	Diaphragm Plug seal	2 1	1 1
6-9611-92-6556	Service kit, FPM	Diaphragm Plug seal	2 1	1 1
6-9612-9393-03	Clamp (DN 40)	-	12	1
6-9612-9393-16	Clamp (1½”)	-	12	1
6-9613-4141-01	Plug	-	17	1
6-9611-99-1988	Air fitting (DN 40)	-	22	1
6-9611-99-4682	Air fitting (1½”)	-	22	1
6-9613-1250-02	Bushing	-	3	1

(Cont'd)

1.0 tf505558.en

(Cont'd)

DN 50 / 2”

Spare part article No.	Description	Included parts	Pos.	Qty
6-9611-92-6545	Service kit, EPDM	Diaphragm Plug seal	2 1	1 1
6-9611-92-6551	Service kit, HNBR	Diaphragm Plug seal	2 1	1 1
6-9611-92-6557	Service kit, FPM	Diaphragm Plug seal	2 1	1 1
6-9612-9393-04	Clamp (DN 50)	-	12	1
6-9612-9393-17	Clamp (2”)	-	12	1
6-9613-4141-01	Plug	-	17	1
6-9611-99-1988	Air fitting (DN 50)	-	22	1
6-9611-99-4682	Air fitting (2”)	-	22	1
6-9613-1250-02	Bushing	-	3	1

DN 65 / 2½”

Spare part article No.	Description	Included parts	Pos.	Qty
6-9611-92-6546	Service kit, EPDM	Diaphragm Plug seal	2 1	1 1
6-9611-92-6552	Service kit, HNBR	Diaphragm Plug seal	2 1	1 1
6-9611-92-6558	Service kit, FPM	Diaphragm Plug seal	2 1	1 1
6-9612-9393-05	Clamp (DN 65)	-	12	1
6-9612-9393-18	Clamp (2½”)	-	12	1
6-9613-4141-01	Plug	-	17	1
6-9611-99-1988	Air fitting (DN 65)	-	22	1
6-9611-99-4682	Air fitting (2½”)	-	22	1
6-9613-1250-02	Bushing	-	3	1

(Cont'd)

1.0 tf505558.en

(Cont'd)

DN 80 / 3”

Spare part article No.	Description	Included parts	Pos.	Qty
6-9611-92-6547	Service kit, EPDM	Diaphragm Plug seal	2 1	1 1
6-9611-92-6553	Service kit, HNBR	Diaphragm Plug seal	2 1	1 1
6-9611-92-6559	Service kit, FPM	Diaphragm Plug seal	2 1	1 1
6-9612-9393-06	Clamp (DN 80)	-	12	1
6-9612-9393-19	Clamp (3”)	-	12	1
6-9613-4141-01	Plug	-	17	1
6-9611-99-1988	Air fitting (DN 80)	-	22	1
6-9611-99-4682	Air fitting (3”)	-	22	1
6-9613-1250-02	Bushing	-	3	1

DN 100 / 4”

1.0 tf505558.en

Spare part article No.	Description	Included parts	Pos.	Qty
6-9611-92-6548	Service kit, EPDM	Diaphragm Plug seal	2 1	1 1
6-9611-92-6554	Service kit, HNBR	Diaphragm Plug seal	2 1	1 1
6-9611-92-6560	Service kit, FPM	Diaphragm Plug seal	2 1	1 1
6-9612-9393-07	Clamp (DN 100)	-	12	1
6-9612-9393-20	Clamp (4”)	-	12	1
6-9613-4141-01	Plug	-	17	1
6-9611-99-1988	Air fitting (DN 100)	-	22	1
6-9611-99-4682	Air fitting (4”)	-	22	1
6-9613-1250-02	Bushing	-	3	1

Actuator - optional maintainable version

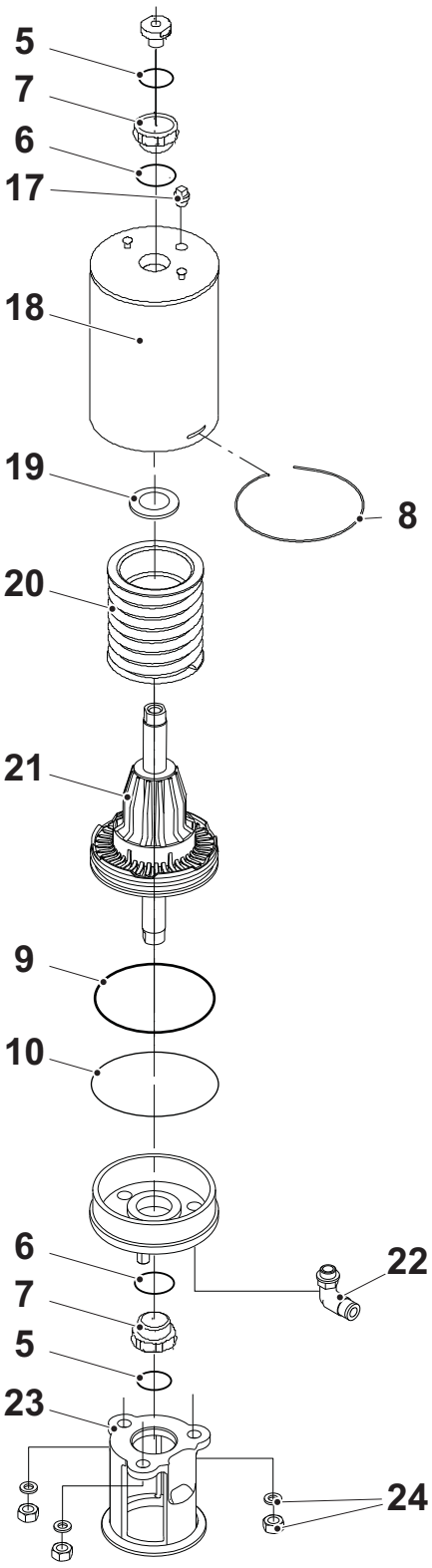

1.0 tf505558.en

DN 25 - DN 40 / 1”- 1½”

Spare part article No.	Description	Included parts	Pos.	Qty
6-9613-1447-01	Actuator, complete, maintainable (NO)	-	-	1
6-9613-1447-04	Actuator, complete, maintainable (NC)	-	-	1
6-9613-1447-07	Actuator, complete, maintainable (A/A)	-	-	1
6-9613-1447-10	Actuator, complete, maintainable (NO) (USA)	-	-	1
6-9613-1447-13	Actuator, complete, maintainable (NC) (USA)	-	-	1
6-9613-1447-16	Actuator, complete, maintainable (A/A) (USA)	-	-	1
6-9611-92-6497	Service kit, NO, NC	O-ring Bushing O-ring O-ring O-ring	10 7 6 5 9	1 2 2 2 1
6-9611-92-6519	Service kit, A/A	O-ring Bushing O-ring O-ring O-ring Support disc	10 7 6 5 9 19	1 2 2 2 1 1
6-9613-1425-01	Cylinder	-	13	1
6-9613-1425-04	Cylinder (USA)	-	13	1
6-9613-1322-01	Piston	-	15	1
6-9613-1432-01	Lock wire	-	14	1
6-9613-1325-01	Spring assembly	-	17	1

(Cont'd)

1.0 tf505558.en

(Cont'd)

DN 50 - DN 65 / 2”- 2½”

Spare part article No.	Description	Included parts	Pos.	Qty
6-9613-1447-02	Actuator, complete, maintainable (NO)	-	-	1
6-9613-1447-05	Actuator, complete, maintainable (NC)	-	-	1
6-9613-1447-08	Actuator, complete, maintainable (A/A)	-	-	1
6-9613-1447-11	Actuator, complete, maintainable (NO) (USA)	-	-	1
6-9613-1447-14	Actuator, complete, maintainable (NC) (USA)	-	-	1
6-9613-1447-17	Actuator, complete, maintainable (A/A) (USA)	-	-	1
6-9611-92-6498	Service kit, NO, NC	O-ring Bushing O-ring O-ring O-ring	10 7 6 5 9	1 2 2 2 1
6-9611-92-6520	Service kit, A/A	O-ring Bushing O-ring O-ring O-ring Support disc	10 7 6 5 9 19	1 2 2 2 1 1
6-9613-1425-02	Cylinder	-	13	1
6-9613-1425-05	Cylinder (USA)	-	13	1
6-9613-1323-01	Piston	-	15	1
6-9613-1432-02	Lock wire	-	14	1
6-9613-1325-02	Spring assembly	-	17	1

(Cont'd)

1.0 tf505558.en

(Cont'd)

DN 80 - DN 100 / 3”- 4”

Spare part article No.	Description	Included parts	Pos.	Qty
6-9613-1447-03	Actuator, complete, maintainable (NO)	-	-	1
6-9613-1447-06	Actuator, complete, maintainable (NC)	-	-	1
6-9613-1447-09	Actuator, complete, maintainable (A/A)	-	-	1
6-9613-1447-12	Actuator, complete, maintainable (NO) (USA)	-	-	1
6-9613-1447-15	Actuator, complete, maintainable (NC) (USA)	-	-	1
6-9613-1447-18	Actuator, complete, maintainable (A/A) (USA)	-	-	1
6-9611-92-6499	Service kit, NO, NC	O-ring Bushing O-ring O-ring O-ring	10 7 6 5 9	1 2 2 2 1
6-9611-92-6521	Service kit, A/A	O-ring Bushing O-ring O-ring O-ring Support disc	10 7 6 5 9 19	1 2 2 2 1 1
6-9613-1425-03	Cylinder	-	13	1
6-9613-1425-06	Cylinder (USA)	-	13	1
6-9613-1324-01	Piston	-	15	1
6-9613-1432-03	Lock wire	-	14	1
6-9613-1325-03	Spring assembly	-	17	1

NO = Normally Open
NC = Normally Closed
A/A = Air / Air, pneumatic upward and downward movement.

1.0 tf505558.en

Actuator - standard version

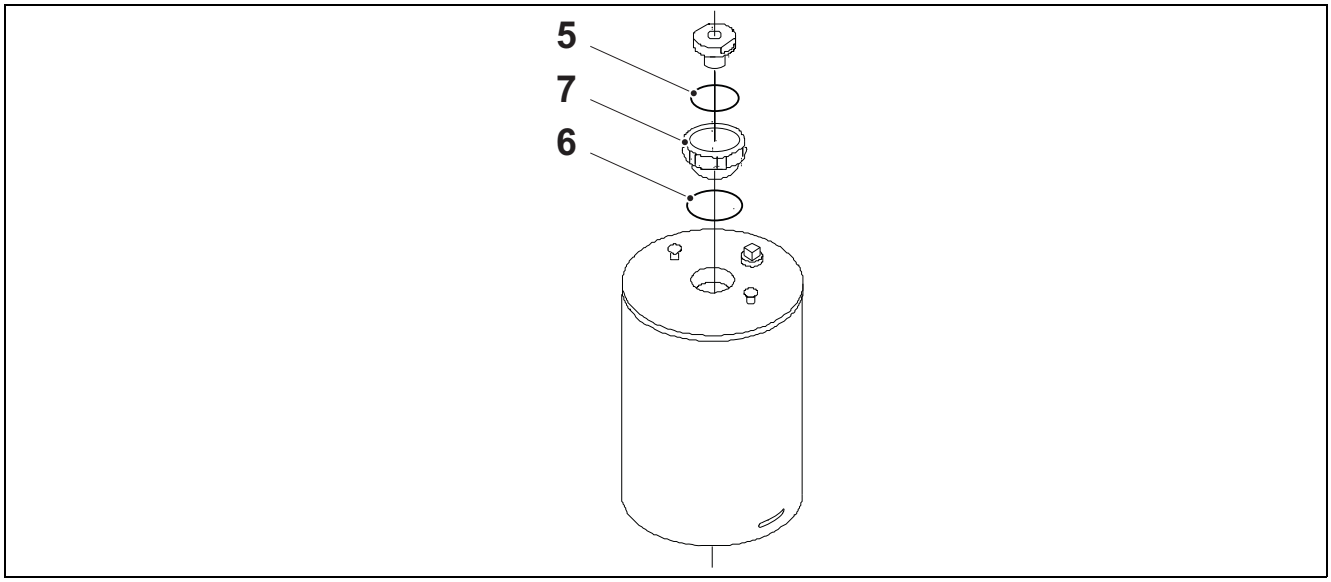

DN 25 - DN 40 / 1”- 1½”

Spare part article No.	Description	Included parts	Pos.	Qty
6-9613-1548-01	Actuator, complete (NO)	-	-	1
6-9613-1548-06	Actuator, complete (NC)	-	-	1
6-9613-1548-11	Actuator, complete (A/A)	-	-	1
6-9613-1548-31	Actuator, complete (NO) (USA)	-	-	1
6-9613-1548-36	Actuator, complete (NC) (USA)	-	-	1
6-9613-1548-41	Actuator, complete (A/A) (USA)	-	-	1
6-9611-92-6500	Service kit	Bushing O-ring O-ring	7 5 6	2 2 2

1.0 tf505558.en

DN 50 - 2”

Spare part article No.	Description	Included parts	Pos.	Qty
6-9613-1548-02	Actuator, complete (NO)	-	-	1
6-9613-1548-07	Actuator, complete (NC)	-	-	1
6-9613-1548-12	Actuator, complete (A/A)	-	-	1
6-9613-1548-32	Actuator, complete (NO) (USA)	-	-	1
6-9613-1548-37	Actuator, complete (NC) (USA)	-	-	1
6-9613-1548-37	Actuator, complete (A/A) (USA)	-	-	1
6-9611-92-6500	Service kit	Bushing O-ring O-ring	7 5 6	2 2 2

(Cont'd)

(Cont'd)

DN 65 - 2½”

Spare part article No.	Description	Included parts	Pos.	Qty
6-9613-1548-03	Actuator, complete (NO)	-	-	1
6-9613-1548-08	Actuator, complete (NC)	-	-	1
6-9613-1548-13	Actuator, complete (A/A)	-	-	1
6-9613-1548-33	Actuator, complete (NO) (USA)	-	-	1
6-9613-1548-38	Actuator, complete (NC) (USA)	-	-	1
6-9613-1548-43	Actuator, complete (A/A) (USA)	-	-	1
6-9611-92-6500	Service kit	Bushing O-ring O-ring	7 5 6	2 2 2

DN 80 - 3”

Spare part article No.	Description	Included parts	Pos.	Qty
6-9613-1548-04	Actuator, complete (NO)	-	-	1
6-9613-1548-09	Actuator, complete (NC)	-	-	1
6-9613-1548-14	Actuator, complete (A/A)	-	-	1
6-9613-1548-34	Actuator, complete (NO) (USA)	-	-	1
6-9613-1548-39	Actuator, complete (NC) (USA)	-	-	1
6-9613-1548-44	Actuator, complete (A/A) (USA)	-	-	1
6-9611-92-6500	Service kit	Bushing O-ring O-ring	7 5 6	2 2 2

1.0 tf505558.en

DN 100 - 4”

Spare part article No.	Description	Included parts	Pos.	Qty
6-9613-1548-05	Actuator, complete (NO)	-	-	1
6-9613-1548-10	Actuator, complete (NC)	-	-	1
6-9613-1548-15	Actuator, complete (A/A)	-	-	1
6-9613-1548-35	Actuator, complete (NO) (USA)	-	-	1
6-9613-1548-40	Actuator, complete (NC) (USA)	-	-	1
6-9613-1548-45	Actuator, complete (A/A) (USA)	-	-	1
6-9611-92-6500	Service kit	Bushing O-ring O-ring	7 5 6	2 2 2

Tetra Pak

Maintenance & Spare Parts

Unique Single-Seat Valve, Aseptic

(Alfa Laval Flow)

SSV Change-over Valves



1.0 1222462-0101.fro

Tetra Pak

Doc No. 1222462-0101

Unique Single-Seat Valve, Aseptic

SSV Change-over Valves

This document refers to components specified in Technical Manual, on Maintenance & Spare Parts CD/DVD or on Tetra Pak Intranet.

1.0 1222462-0101.fro

Version 04 Issue 2013-08

Doc No. 1222462-0101

Tetra Pak

Tetra Pak Processing Systems AB

Table of contents

General 1

Function description. 1

Maintenance 3

Pre-use check 3

Disassemble valve 4

Assemble valve 8

Actuator, optional maintainable version 12

Change spare part kit 12

Actuator, both standard and optional maintainable version. 15

Actuator bushing replacement 15

Cleaning 16

Troubleshooting 18

Spare parts 19

Valve 19

Actuator - Optional maintainable version 23

Actuator - Standard version 25-101.6mm/DN25-100 27

Actuator - Two Step maintainable version 30

Tools 33

1.0 1222462-0101.TOC

This page intentionally left blank

General

Function description

Change-over valve

The Unique Single Seat Valve, change-over version, is an air-operated seat valve in a sanitary and flexible design giving a wide field of applications, e.g. as a change-over diaphragm valve with three to five ports.

The valve is remote-controlled by means of compressed air. To ensure a high degree of flexibility the valve seat between the two bodies in the change-over version is loose. To reduce the wear of seals there is a controlled compression of seals by metal to metal contact. The actuator is connected to the valve body using a yoke and all components are assembled with clamp rings.

Two-step valve

The Unique single-seat Two-step Valve has two pistons inside the actuator, which makes it possible to have an intermediate plug position where all body ends are open.

Two step valves can be used for reducing pressure hammers and dosing, e.g. in connection with filling of a vessel where an exact volume is required.

(Cont'd)

2.2tf505559.en

(Cont'd)

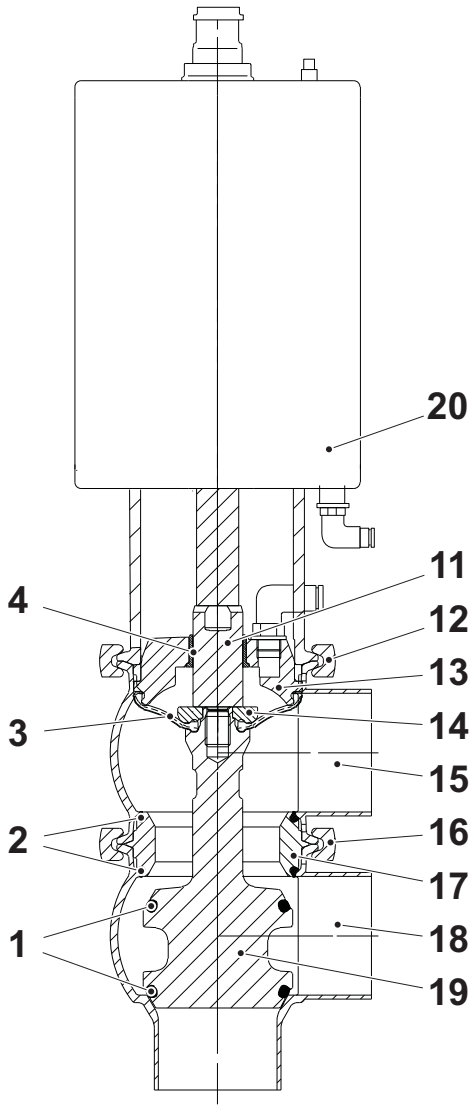

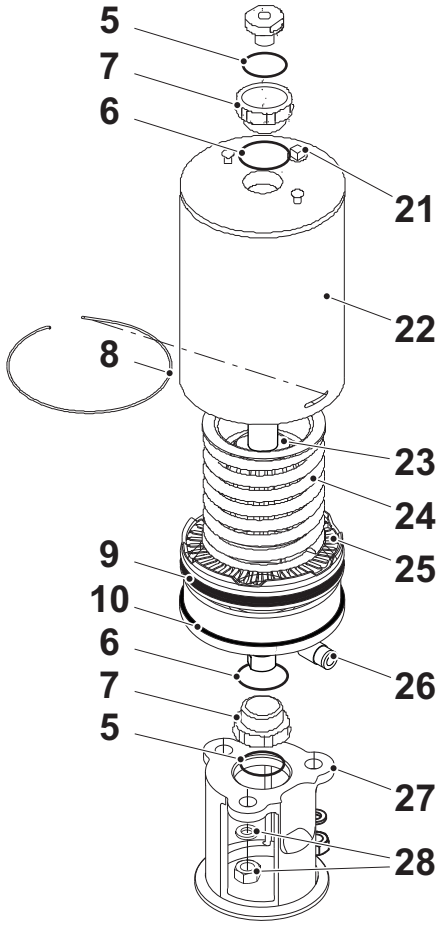

2.2tf505559.en

1 Plug seal 2 pcs
2 O-ring 2 pcs
3 Diaphragm
4 Bushing
5 O-ring 2 pcs
6 O-ring 2 pcs
7 Bushing 2 pcs
8 Lock wire
9 O-ring
10 O-ring
11 Spindle
12 Upper clamp
13 Bonnet
14 Diaphragm disc
15 Upper valve body
16 Lower clamp
17 Seat
18 Lower valve body
19 Valve plug
20 Actuator
21 Plug
22 Cylinder
23 Support disc
24 Spring assembly
25 Piston
26 Air fitting
27 Yoke
28 Nut with washer 3 pcs

Maintenance

Pre-use check

WARNING! **Risk of injury!**
Never service the valve when it is hot.
Never service the valve with valve and pipelines under pressure.
Never stick your fingers through the valve ports if the actuator is supplied with compressed air.
Always release the compressed air after use.
Always remove the CIP connections, if supplied, before service.

Note! Check the valve for smooth operation after service.

a) Supply compressed air to the actuator.

b) Operate the valve several times to ensure that it operates smoothly.

Note! Pay special attention to the warnings!

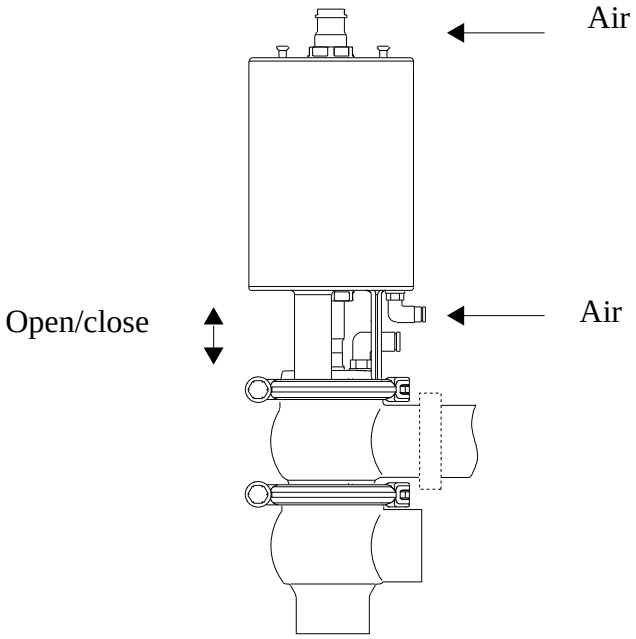

2.2tf505559.en

Disassemble valve

WARNING!

Risk of injury!
- Never service the valve when it is hot.
- Never service the valve with valve and pipelines under pressure.
- Make sure that the pipeline is drained and free from media before servicing the valve.
- The valve and pipelines must **never** be pressurized when serviced.
- Never stick your fingers through the valve ports if the actuator is supplied with compressed air.
- Always release compressed air after use.

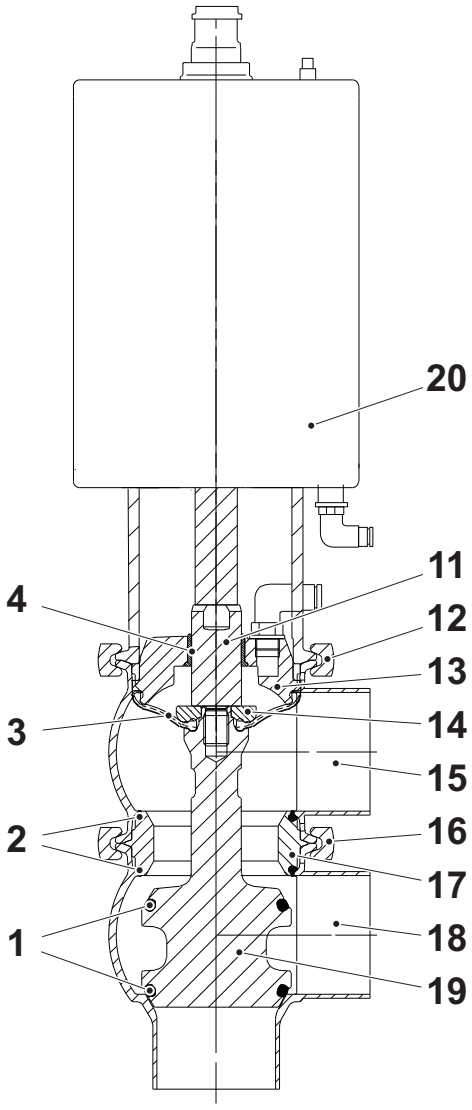

2.2tf505559.en

1 Plug seal 2 pcs
2 O-ring 2 pcs
3 Diaphragm
4 Bushing
11 Spindle
12 Upper clamp
13 Bonnet
14 Diaphragm disc
15 Upper valve body
16 Lower clamp
17 Seat
18 Lower valve body
19 Valve plug
20 Actuator

(Cont'd)

(Cont'd)

NO: Normally open
NC: Normally closed
A/A: Air/Air activated

Note! When dismounting the valve always mark the position of actuator (20), the upper valve body (15) and lower valve body (18). This makes the reassembling much easier, as the valve can be mounted up in the workshop in the same position.
Remember NOT to dismount the lower clamp (16) unless the plug stays in the upper position (only type NO actuator), as the diaphragm then will be destroyed if the plug moves downwards.

Caution! Always start with dismounting the upper clamp to avoid damaging the diaphragm.

a) Ensure that the actuator stem is in upper position and then loosen the upper clamp (12).

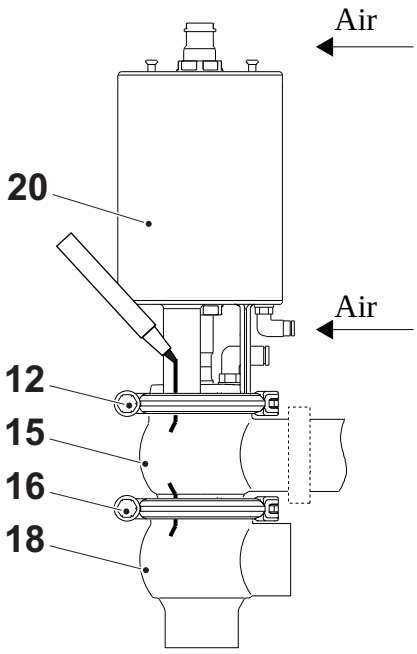

12 Upper clamp
15 Upper valve body
16 Lower clamp
18 Lower valve body
20 Actuator

(Cont'd)

2.2tf505559.en

(Cont'd)

WARNING!

Risk of finger cut!
Beware the gap between plug (19), seat (17), upper valve body (15) and actuator (20).

b) Loosen and remove lower clamp (16).

c) Lift away the actuator (20) with upper valve body (15).

d) Ensure actuator stem is in lower position and loosen the spindle (11) from the actuator (20). Use 17 mm spanners.

e) Remove the plug (19), seat (17) and the upper valve body (15) from the actuator yoke.

f) It might be easier to use a vice at the upper part of the spindle (11).

g) Disassemble the spindle (11) from the plug (19).

h) Disassemble the plug (19) and seat (17) from the upper valve body (15).

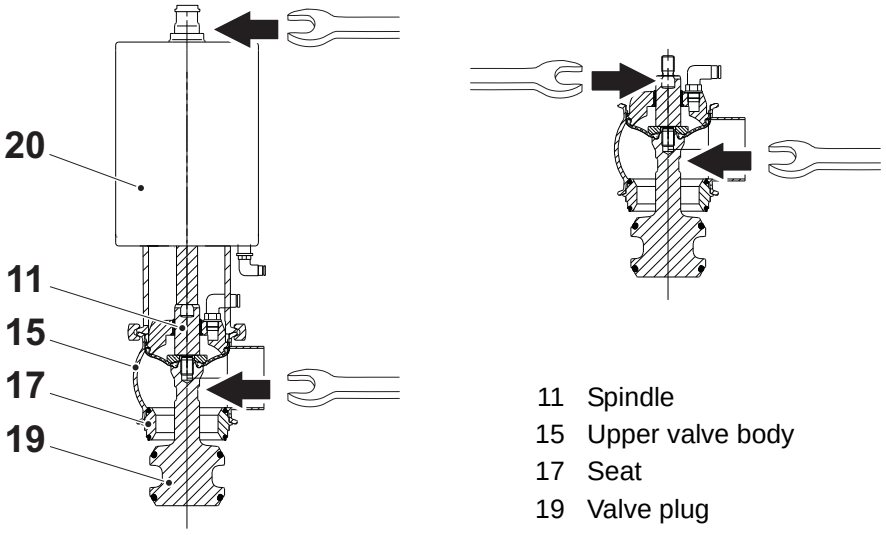

2.2tf505559.en

11 Spindle
15 Upper valve body
17 Seat
19 Valve plug
20 Actuator

(Cont'd)

(Cont'd)

i) Disassemble the bonnet from the upper valve body. Use the plug in the upper valve body and press down on the upper valve body until the bonnet is loose (remember to remove the seat first). Be careful not to damage the plug.



Note! The bushing (4) does not normally need to be replaced.

j) Disassemble the bushing (4) by using a bushing tool and a rubber mallet.

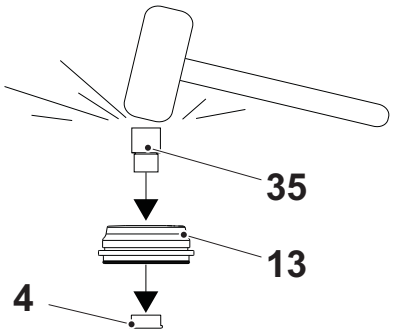

4 Bushing
13 Bonnet
35 Bushing tool

2.2tf505559.en

Assemble valve

a) Fit a new bushing (4) in the bonnet (13) if applicable.

Note! Use grease ”Paraliq GTE 703” round edge of the bonnet, before mounting the diaphragm.

b) Put the diaphragm disc (14) in the bonnet, with the plane disc side towards the bonnet bushing (4).

c) Fit diaphragm (3) to the bonnet (13). Press only with the fingers. Be sure that diaphragm is correctly fitted on the “round edge” on the bonnet.

d) Lubricate the edges of the upper valve body (15) with ”Paraliq GTE 703” to ensure correct mounting of the diaphragm. The sealing surface must be clean to avoid leakage.

e) Assemble the bonnet (13) and diaphragm (3) into the upper valve body (15). Press hard, without tools, on the bonnet to fit it in the upper valve body.

f) Replace the two O-rings (2) on the seat (17).

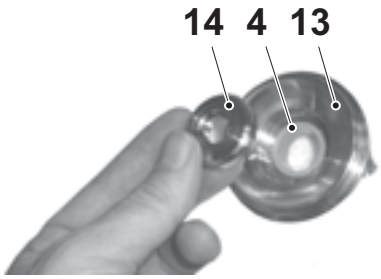

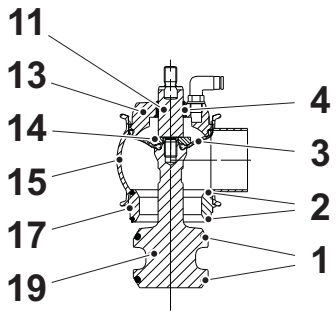

2.2tf505559.en

1	Plug seal 2 pcs	13	Bonnet
2	O-ring 2 pcs	14	Diaphragm disc
3	Diaphragm	15	Upper valve body
4	Bushing	17	Seat
11	Spindle	19	Valve plug

a) Remove old plug seals (1) using a knife, screwdriver or similar. Be careful not to damage metal parts.

(Cont'd)

(Cont'd)

b) Pre-mount plug seals (1) without pressing them into the groove. See working methods with or without mounting tool, below.

With mounting tool

c) Put the plug (19) in the lower part (30) of the mounting tool.

d) Put the upper part of mounting tool (31) over the plug and press down.

e) The seals will be visible in the bores (32). Very carefully insert a narrow screwdriver just under the seal (1).

f) Carefully press the screwdriver down, in order to release compressed air behind the seal (1).

Without mounting tool

g) Squeeze plug seals (1) into the groove using opposite pressure points.

h) Release compressed air behind plug seals (1).

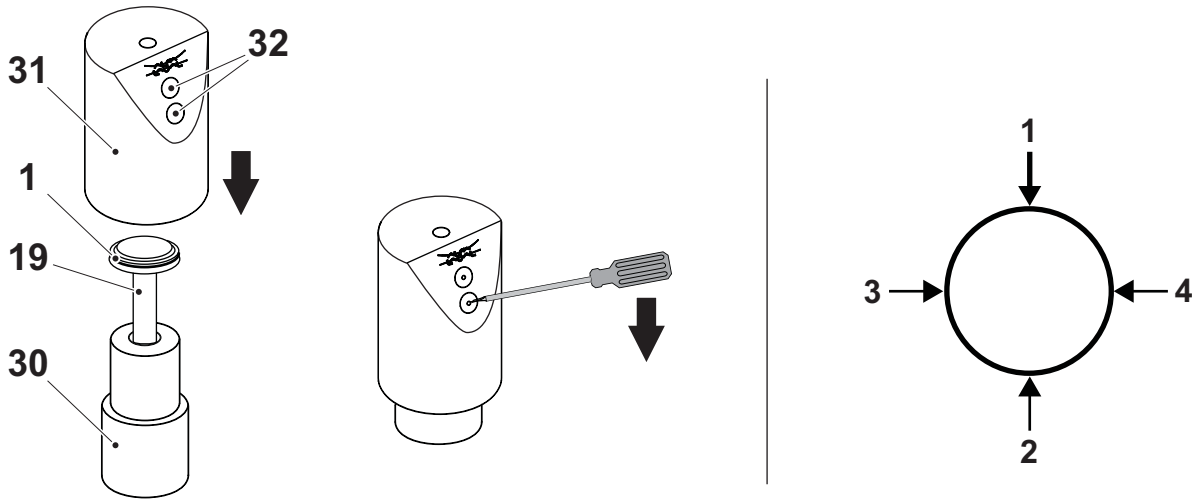

2.2tf505559.en

1 Plug seal
19 Plug
30 Mounting tool, lower part
31 Mounting tool, upper part
32 Bores

(Cont'd)

(Cont'd)

i) Apply “Loctite 243” on the plug thread.

Note! Be careful not to spill a drop outside the threaded hole, as this will glue the disc and plug together.

j) Assemble the plug (19) together with the seat (17) in the upper valve body (15).

k) Assemble the spindle (11). Be sure that the diaphragm disc (14) is placed correctly on the plug while screwing spindle and plug together.

l) Tighten the spindle and plug according to torque table below. Use 17 mm spanners.

m) Ensure that the actuator stem is in lower position.

WARNING! **Risk of finger cut!**
Beware the gap between plug (16), seat (17), upper valve body (15) and actuator (20).

n) Assemble the valve to the actuator. Use 17 mm spanners on the plug stem and actuator stem. Tighten according to torque table below.

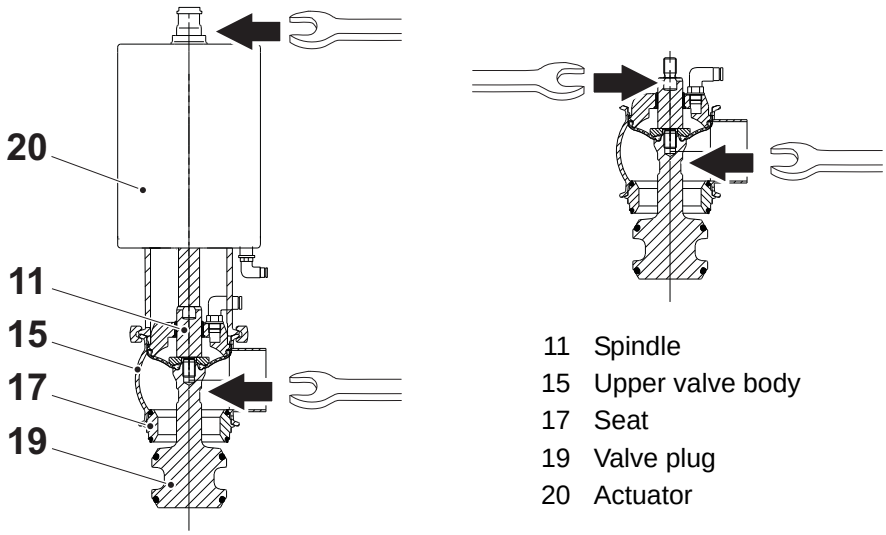

11 Spindle
15 Upper valve body
17 Seat
19 Valve plug
20 Actuator

2.2tf505559.en

(Cont'd)

(Cont'd)

Size		Torque
D25 - DN40	1” - 1½”	15 Nm
DN50 - DN100	2” - 4”	33 Nm

o) Align upper valve body and actuator if necessary, according to the marks that were done before disassembly. **This is done by rotating only the valve body clock wise.**

p) Ensure that the actuator stem is in upper position.

WARNING! **Risk of finger cut!**
Beware the gap between plug (19), seat (17), upper valve body (15) and actuator (20).

q) Assemble the lower valve body (17). Remember to align with the upper valve body before tightening the lower clamp (16). Then tighten with a torque of 12 Nm.

r) Assemble the upper clamp (12). Then tighten with a torque of 12 Nm.

Caution! Do NOT disassemble the lower clamp (16) unless the plug stays in the upper position. The diaphragm will then be destroyed if the plug moves downwards.
If the upper valve body has to be rotated remember ALWAYS to start with dismounting the upper clamp (12).

2.2tf505559.en

Actuator, optional maintainable version

Change spare part kit

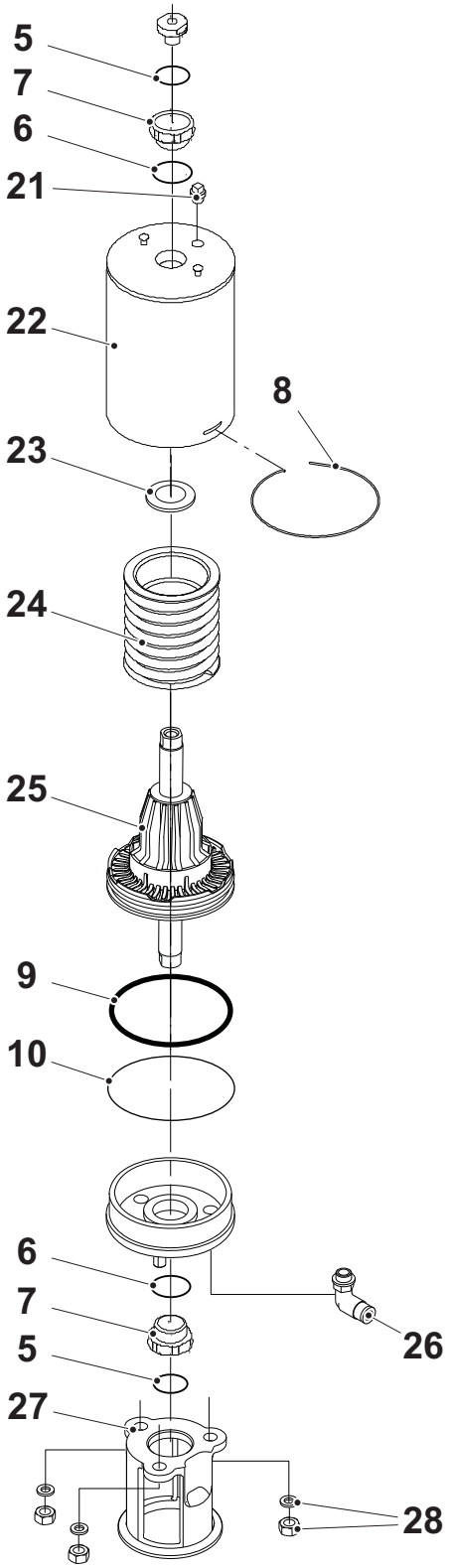

2.2tf505559.en

5 O-ring 2 pcs
6 O-ring 2 pcs
7 Bushing
8 Lock wire
9 O-ring
10 O-ring
21 Plug
22 Cylinder
23 Support disc
24 Spring assembly
25 Piston
26 Air fitting
27 Yoke
28 Nut with washer 3 pcs

WARNING!

Dismantling/Assembly

Risk of injury!

- Make sure that the pipelines are drained and free from media before servicing the valve!
- **Never** service the valve when it is hot!
- **Never** service the valve with valve and pipelines under pressure.
- **Always** release compressed air after use.
- **Never** put your fingers through the valve ports if the actuator is supplied with compressed air!

Note! NC = Normally closed.

NO = Normally open.

A/A = Air/air activated

a) Rotate cylinder (22).

b) Remove lock wire (8) and pull away cylinder (22).

c) Unscrew nuts (28) and remove the yoke (27).

d) Unscrew top and bottom bushings (7).

e) Remove piston (25) with O-ring (9) and spring assembly (24).

f) Remove O-ring (10) and support disc (23).

2.2tf505559.en

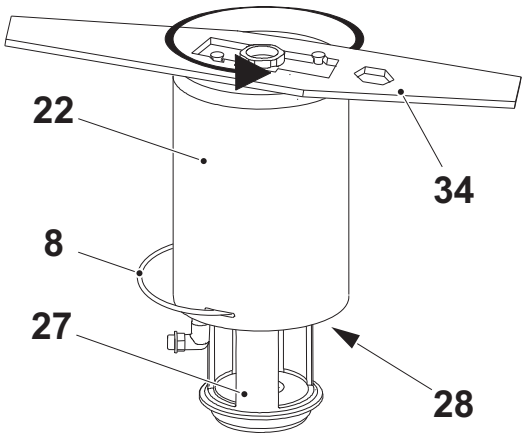

8 Lock wire
22 Cylinder
27 Yoke
28 Nut with washer 3 pcs
34 Actuator dismantling tool

Note! The A/A actuator has no spring assembly.

(Cont'd)

(Cont'd)

Assembly

Assembly of the actuator is made in the reverse order to dismantling.

Note! Lubricate O-rings (9) and (10) with Molykote Long term 2 plus before fitting.

2.2tf505559.en

Actuator, both standard and optional maintainable version

Actuator bushing replacement

a) Unscrew and remove top and bottom bushings (7) with O-rings (5) and (6).

b) Lubricate O-rings (5) and (6) with Molykote Long term 2 plus before fitting.

c) Fit bushings (7) and O-rings (5) and (6). Be careful not to overtighten.

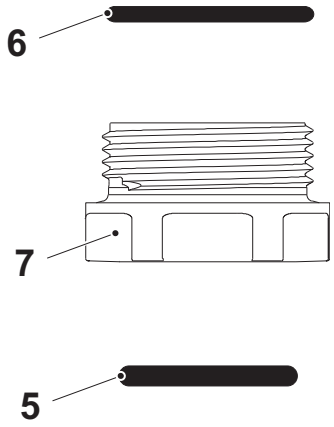

5 O-ring 2 pcs
6 O-ring 2 pcs
7 Bushing

2.2tf505559.en

Cleaning

DANGER! **Risk of injury!**
Always handle lye and acid with great care!
Always use rubber gloves!
Always use protective goggles!

WARNING! **Risk of burning!**
Never touch the valve or the pipelines when sterilizing.

WARNING! **Risk of injury!**
Always rinse well with clean water after cleaning.

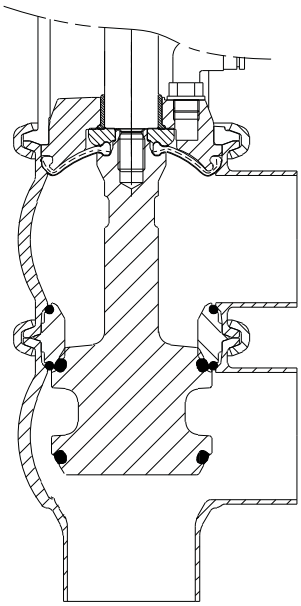

2.2tf505559.en

Note! The cleaning agents must be stored/discharged in accordance with current rules/directives.

Note! Avoid excessive concentration of the cleaning agent, dose gradually.

Note! Adjust the cleaning flow to the process.

(Cont'd)

(Cont'd)

Examples of cleaning agents:

Use clean water, free from chlorides.

– 1% by weight NaOH at 70°C.

1 kg NaOH + 100 litre water = Cleaning agent

2.2 litre 33% NaOH + 100 litre water = Cleaning agent

– 0.5% by weight HNO_3 at 70°C.

0.7 litre 53% HNO3 + 100 litre water = Cleaning agent

NaOH = Caustic soda
HNO_3= Nitric acid

2.2tf505559.en

Troubleshooting

Problem	Cause	Action
External product leakage	- Worn or product-affected dia-phragm and/or O-ring	- Replace the seals - Replace with seals of a different rubber grade
Internal product leakage	- Worn or product-affected plug seal - Product deposits on the seat and/or plug - Product pressure exceeds actuator specification	- Replace the seal - Frequent cleaning - Replace with a high pressure actuator - Use auxiliary air on the spring side - Reduce product pressure
Water hammer	- The flow direction is the same as the closing direction	- The flow direction should be against the closing direction - Throttle air release of solenoid in top unit
The valve does not open/close	- Product pressure exceeds actuator specification	- Replace with a high-pressure actuator - Use auxiliary air on the spring side - Reduce product pressure

2.2tf505559.en

Spare parts

Valve

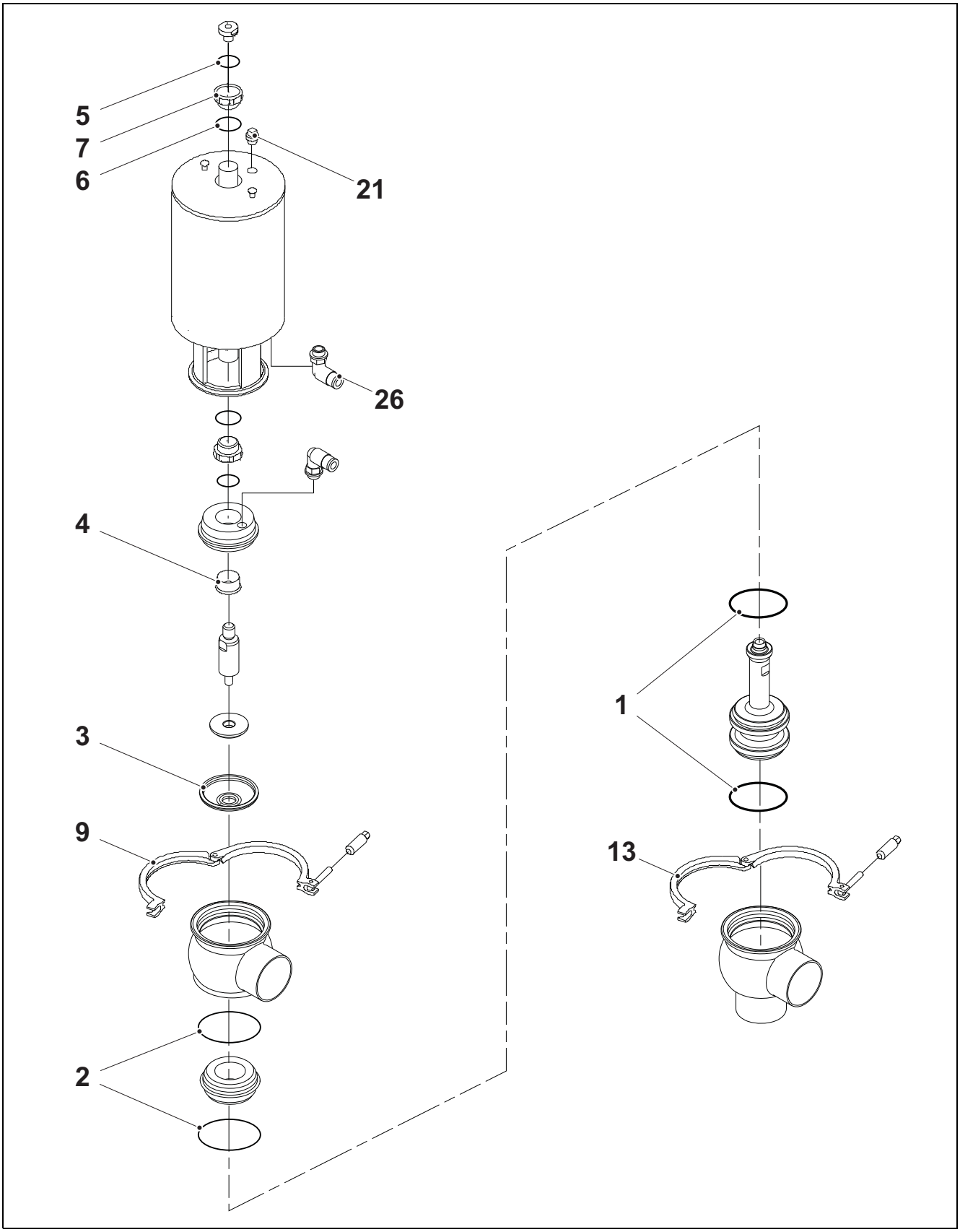

1.0 tf505560.en

DN 25 / 1”

Spare part article No.	Description	Included parts	Pos.	Qty
6-9611-92-6615	Service kit, EPDM	Diaphragm O-ring Plug seal	3 2 1	1 2 2
6-9611-92-6621	Service kit, HNBR	Diaphragm O-ring Plug seal	3 2 1	1 2 2
6-9611-92-6627	Service kit, FPM	Diaphragm O-ring Plug seal	3 2 1	1 2 2
6-9612-93-9303	Clamp (DN 25)	-	19	1
6-9612-93-9316	Clamp (1”)	-	19	1
6-9613-41-4101	Plug	-	9	1
6-9611-99-1988	Air fitting (DN 25)	-	12	1
6-9611-99-4682	Air fitting 1”	-	12	1

DN 40 / 1½”

Spare part article No.	Description	Included parts	Pos.	Qty
6-9611-92-6616	Service kit, EPDM	Diaphragm O-ring Plug seal	3 2 1	1 2 2
6-9611-92-6622	Service kit, HNBR	Diaphragm O-ring Plug seal	3 2 1	1 2 2
6-9611-92-6628	Service kit, FPM	Diaphragm O-ring Plug seal	3 2 1	1 2 2
6-9612-93-9303	Clamp (DN 40)	-	19	1
6-9612-93-9316	Clamp (1½”)	-	19	1
6-9613-41-4101	Plug	-	9	1
6-9611-99-1988	Air fitting (DN 40)	-	12	1
6-9611-99-4682	Air fitting (1½)”	-	12	1

(Cont'd)

1.0 tf505560.en

(Cont'd)

DN 50 / 2”

Spare part article No.	Description	Included parts	Pos.	Qty
6-9611-92-6617	Service kit, EPDM	Diaphragm O-ring Plug seal	3 2 1	1 2 2
6-9611-92-6623	Service kit, HNBR	Diaphragm O-ring Plug seal	3 2 1	1 2 2
6-9611-92-6629	Service kit, FPM	Diaphragm O-ring Plug seal	3 2 1	1 2 2
6-9612-93-9304	Clamp (DN 50)	-	9, 13	1
6-9612-93-9317	Clamp (2”)	-	9, 13	1
6-9613-41-4101	Plug	-	21	1
6-9611-99-1988	Air fitting (DN 50)	-	26	1
6-9611-99-4682	Air fitting (2”)	-	26	1

1.0 tf505560.en

DN 65 / 2½”

Spare part article No.	Description	Included parts	Pos.	Qty
6-9611-92-6618	Service kit, EPDM	Diaphragm O-ring Plug seal	3 2 1	1 2 2
6-9611-92-6624	Service kit, HNBR	Diaphragm O-ring Plug seal	3 2 1	1 2 2
6-9611-92-6630	Service kit, FPM	Diaphragm O-ring Plug seal	3 2 1	1 2 2
6-9612-93-9305	Clamp (DN 65)	-	9, 13	1
6-9612-93-9318	Clamp (2½”)	-	9, 13	1
6-9613-41-4101	Plug	-	21	1
6-9611-99-1988	Air fitting (DN 65)	-	26	1
6-9611-99-4682	Air fitting (2½”)	-	26	1

(Cont'd)

(Cont'd)

DN 80 / 3”

Spare part article No.	Description	Included parts	Pos.	Qty
6-9611-92-6619	Service kit, EPDM	Diaphragm O-ring Plug seal	3 2 1	1 2 2
6-9611-92-6625	Service kit, HNBR	Diaphragm O-ring Plug seal	3 2 1	1 2 2
6-9611-92-6631	Service kit, FPM	Diaphragm O-ring Plug seal	3 2 1	1 2 2
6-9612-93-9306	Clamp (DN 80)	-	9, 13	1
6-9612-93-9319	Clamp (3”)	-	9, 13	1
6-9613-41-4101	Plug	-	21	1
6-9611-99-1988	Air fitting (DN 80)	-	26	1
6-9611-99-4682	Air fitting (3”)	-	26	1

DN 100 / 4”

Spare part article No.	Description	Included parts	Pos.	Qty
6-9611-92-6620	Service kit, EPDM	Diaphragm O-ring Plug seal	3 2 1	1 2 2
6-9611-92-6626	Service kit, HNBR	Diaphragm O-ring Plug seal	3 2 1	1 2 2
6-9611-92-6632	Service kit, FPM	Diaphragm O-ring Plug seal	3 2 1	1 2 2
6-9612-93-9307	Clamp (DN 100)	-	9, 13	1
6-9612-93-9320	Clamp (3”)	-	9, 13	1
6-9613-41-4101	Plug	-	21	1
6-9611-99-1988	Air fitting (DN 100)	-	26	1
9611-99-4682	Air fitting (4”)	-	26	1

1.0 tf505560.en

Actuator - Optional maintainable version

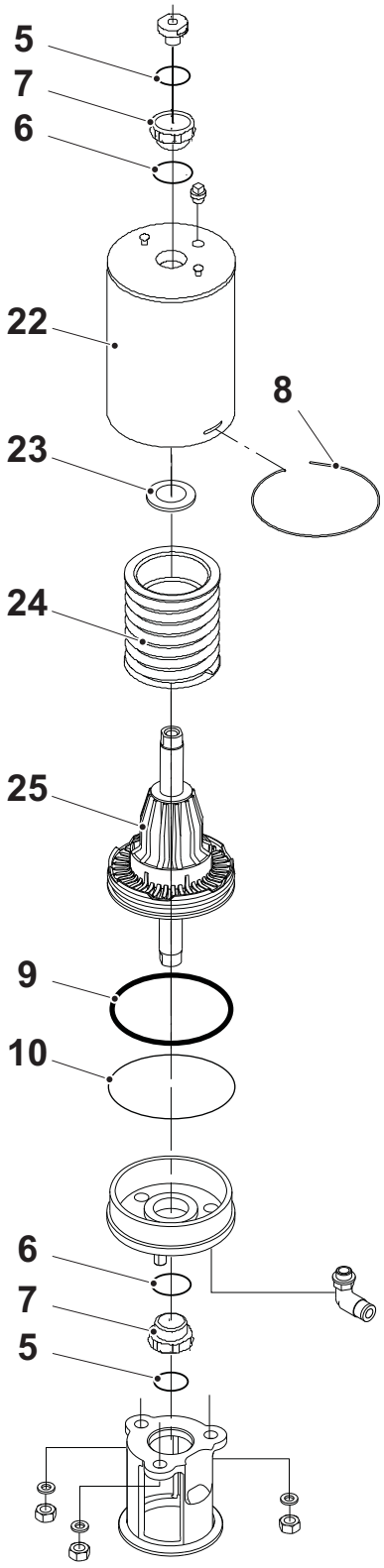

1.0 tf505560.en

DN 25 - DN 40 / 1”- 1½”

Spare part article No.	Description	Included parts	Pos.	Qty
6-9613-14-4701	Actuator, complete, maintainable (NO)	-	-	1
6-9613-14-4704	Actuator, complete, maintainable (NC)	-	-	1
6-9613-14-4707	Actuator, complete, maintainable (A/A)	-	-	1
6-9613-14-4710	Actuator, complete, maintainable (NO) (USA)	-	-	1
6-9613-14-4713	Actuator, complete, maintainable (NC) (USA)	-	-	1
6-9613-14-4716	Actuator, complete, maintainable (A/A) (USA)	-	-	1
6-9611-92-6497	Service kit, NO, NC	O-ring Bushing O-ring O-ring O-ring	10 7 6 5 9	1 2 2 2 1
6-9611-92-6519	Service kit, A/A	O-ring Bushing O-ring O-ring O-ring Support disc	10 7 6 5 9 23	1 2 2 2 1 1
6-9613-14-2501	Cylinder	-	22	1
6-9613-14-2504	Cylinder (USA)	-	22	1
6-9613-13-2201	Piston	-	25	1
6-9613-14-3201	Lock wire	-	8	1
6-9613-13-2501	Spring assembly	-	24	1

(Cont'd)

1.0 tf505560.en

(Cont'd)

DN 50 - DN 65 / 2”- 2½”

Spare part article No.	Description	Included parts	Pos.	Qty
6-9613-14-4702	Actuator, complete, maintainable (NO)	-	-	1
6-9613-14-4705	Actuator, complete, maintainable (NC)	-	-	1
6-9613-14-4708	Actuator, complete, maintainable (A/A)	-	-	1
6-9613-14-4711	Actuator, complete, maintainable (NO) (USA)	-	-	1
6-9613-14-4714	Actuator, complete, maintainable (NC) (USA)	-	-	1
6-9613-14-4717	Actuator, complete, maintainable (A/A) (USA)	-	-	1
6-9611-92-6498	Service kit, NO, NC	O-ring Bushing O-ring O-ring O-ring	10 7 6 5 9	1 2 2 2 1
6-9611-92-6520	Service kit, A/A	O-ring Bushing O-ring O-ring O-ring Support disc	10 7 6 5 9 23	1 2 2 2 1 1
6-9613-14-2502	Cylinder	-	22	1
6-9613-14-2505	Cylinder (USA)	-	22	1
6-9613-13-2301	Piston	-	25	1
6-9613-14-3202	Lock wire	-	8	1
6-9613-13-2502	Spring assembly	-	24	1

(Cont'd)

1.0 tf505560.en

(Cont'd)

DN 80 - DN 100 / 3”- 4”

Spare part article No.	Description	Included parts	Pos.	Qty
6-9613-14-4703	Actuator, complete, maintainable (NO)	-	-	1
6-9613-14-4706	Actuator, complete, maintainable (NC)	-	-	1
6-9613-14-4709	Actuator, complete, maintainable (A/A)	-	-	1
6-9613-14-4712	Actuator, complete, maintainable (NO) (USA)	-	-	1
6-9613-14-4715	Actuator, complete, maintainable (NC) (USA)	-	-	1
6-9613-14-4718	Actuator, complete, maintainable (A/A) (USA)	-	-	1
6-9611-92-6499	Service kit, NO, NC	O-ring Bushing O-ring O-ring O-ring	10 7 6 5 9	1 2 2 2 1
6-9611-92-6521	Service kit, A/A	O-ring Bushing O-ring O-ring O-ring Support disc	10 7 6 5 9 23	1 2 2 2 1 1
6-9613-14-2503	Cylinder	-	22	1
6-9613-14-2506	Cylinder (USA)	-	22	1
6-9613-13-2401	Piston	-	25	1
6-9613-14-3203	Lock wire	-	8	1
6-9613-13-2503	Spring assembly	-	24	1

NO = Normally Open
NC = Normally Closed
A/A = Air / Air, pneumatic upward and downward movement.

1.0 tf505560.en

Actuator - Standard version 25-101.6mm/DN25-100

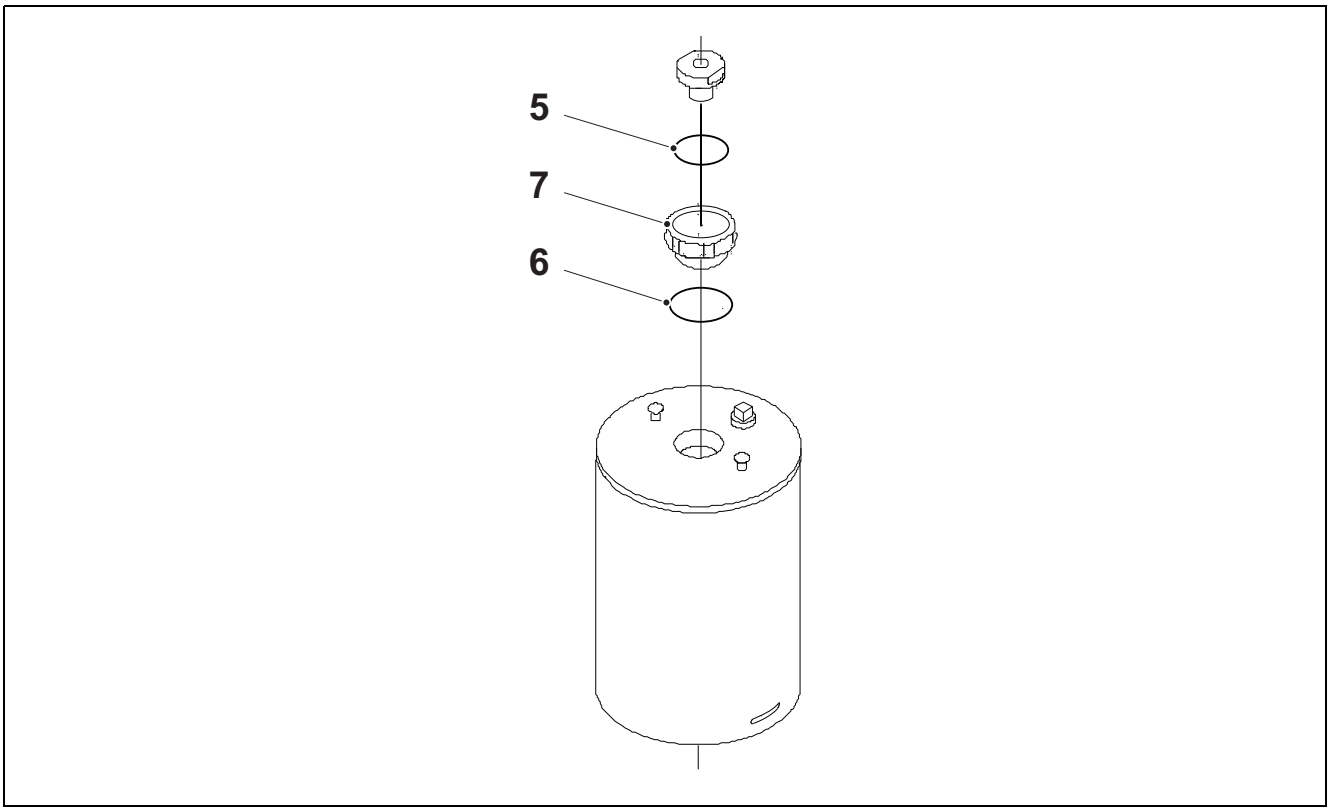

1.0 tf505560.en

DN 25 - DN 40 / 1”- 1½”

Spare part article No.	Description	Included parts	Pos.	Qty
6-9613-15-4801	Actuator, complete (NO)	-	-	1
6-9613-15-4806	Actuator, complete (NC)	-	-	1
6-9613-15-4811	Actuator, complete (A/A)	-	-	1
6-9613-15-4831	Actuator, complete (NO) (USA)	-	-	1
6-9613-15-4836	Actuator, complete (NC) (USA)	-	-	1
6-9613-15-4841	Actuator, complete (A/A) (USA)	-	-	1
6-9611-92-6500	Service kit	Bushing O-ring O-ring	20 21 22	2 2 2

(Cont'd)

(Cont'd)

DN 50 - 2”

Spare part article No.	Description	Included parts	Pos.	Qty
6-9613-15-4802	Actuator, complete (NO)	-	-	1
6-9613-15-4807	Actuator, complete (NC)	-	-	1
6-9613-15-4812	Actuator, complete (A/A)	-	-	1
6-9613-15-4832	Actuator, complete (NO) (USA)	-	-	1
6-9613-15-4837	Actuator, complete (NC) (USA)	-	-	1
6-9613-15-4837	Actuator, complete (A/A) (USA)	-	-	1
6-9611-92-6500	Service kit	Bushing O-ring O-ring	20 21 22	2 2 2

DN 65 - 2½”

Spare part article No.	Description	Included parts	Pos.	Qty
6-9613-15-4803	Actuator, complete (NO)	-	-	1
6-9613-15-4808	Actuator, complete (NC)	-	-	1
6-9613-15-4813	Actuator, complete (A/A)	-	-	1
6-9613-15-4833	Actuator, complete (NO) (USA)	-	-	1
6-9613-15-4838	Actuator, complete (NC) (USA)	-	-	1
6-9613-15-4843	Actuator, complete (A/A) (USA)	-	-	1
6-9611-92-6500	Service kit	Bushing O-ring O-ring	20 21 22	2 2 2

(Cont'd)

1.0 tf505560.en

(Cont'd)

DN 80 - 3”

Spare part article No.	Description	Included parts	Pos.	Qty
6-9613-15-4804	Actuator, complete (NO)	-	-	1
6-9613-15-4809	Actuator, complete (NC)	-	-	1
6-9613-15-4814	Actuator, complete (A/A)	-	-	1
6-9613-15-4834	Actuator, complete (NO) (USA)	-	-	1
6-9613-15-4839	Actuator, complete (NC) (USA)	-	-	1
6-9613-15-4844	Actuator, complete (A/A) (USA)	-	-	1
6-9611-92-6500	Service kit	Bushing O-ring O-ring	20 21 22	2 2 2

DN 100 - 4”

Spare part article No.	Description	Included parts	Pos.	Qty
6-9613-15-4805	Actuator, complete (NO)	-	-	1
6-9613-15-4810	Actuator, complete (NC)	-	-	1
6-9613-15-4815	Actuator, complete (A/A)	-	-	1
6-9613-15-4835	Actuator, complete (NO) (USA)	-	-	1
6-9613-15-4840	Actuator, complete (NC) (USA)	-	-	1
6-9613-15-4845	Actuator, complete (A/A) (USA)	-	-	1
6-9611-92-6500	Service kit	Bushing O-ring O-ring	20 21 22	2 2 2

1.0 tf505560.en

Actuator - Two Step maintainable version

DN 40

Spare part article No.	Description	Included parts	Pos.	Qty
6-9613-16-8701	Actuator, complete (NC)	-	-	1
6-9613-16-8725	Actuator, complete (NO)	-	-	1
6-9613-16-8717	Actuator, complete (NC)	-	-	1
6-9613-16-7705	Cylinder	-	-	1
6-9613-13-2304	Piston	-	-	1
6-9613-12-7401	Adapter, plastic	-	-	1
6-9613-41-4101	Plug	-	-	2
6-9613-14-3202	Lock wire	-	-	1
6-9611-99-1988	Air fitting	-	-	2
6-9613-13-2502	Spring assembly	-	-	1
6-519975-09	Lock ring	-	-	1
6-9613-13-3001	Yoke	-	-	1
6-9611-99-1888	Washer	-	-	3
6-9611-99-0360	Nut	-	-	3
6-9611-92-6738	Service kit	O-ring Bushing O-ring O-ring O-ring Support disc O-ring O-ring	- - - - - - - -	2 1 2 1 1 1 1 1
6-31353-0219-1	Service tool for Maintainable actuator	-	-	1

(Cont'd)

1.0 tf505560.en

(Cont'd)

DN 50 - DN 65

Spare part article No.	Description	Included parts	Pos.	Qty
6-9613-16-8701	Actuator, complete (NC)	-	-	1
6-9613-16-8725	Actuator, complete (NO)	-	-	1
6-9613-16-8717	Actuator, complete (NC)	-	-	1
6-9613-16-7705	Cylinder	-	-	1
6-9613-13-2304	Piston	-	-	1
6-9613-12-7401	Adapter, plastic	-	-	1
6-9613-41-4101	Plug	-	-	2
6-9613-14-3202	Lock wire	-	-	1
6-9611-99-1988	Air fitting	-	-	2
6-9613-13-2502	Spring assembly	-	-	1
6-519975-09	Lock ring	-	-	1
6-9613-13-3101	Yoke (DN 50)	-	-	1
6-9613-13-3201	Yoke (DN 65)	-	-	1
6-9611-99-1888	Washer	-	-	3
6-9611-99-0360	Nut	-	-	3
6-9611-92-6738	Service kit	O-ring Bushing O-ring O-ring O-ring Support disc O-ring O-ring	- - - - - - - -	2 1 2 1 1 1 1 1
6-31353-0219-1	Service tool for Maintainable actuator	-	-	1

(Cont'd)

1.0 tf505560.en

(Cont'd)

DN 80 - DN 100

Spare part article No.	Description	Included parts	Pos.	Qty
6-9613-16-8701	Actuator, complete (NC)	-	-	1
6-9613-16-8725	Actuator, complete (NO)	-	-	1
6-9613-16-8717	Actuator, complete (NC)	-	-	1
6-9613-16-7705	Cylinder	-	-	1
6-9613-13-2304	Piston	-	-	1
6-9613-12-7401	Adapter, plastic	-	-	1
6-9614-06-5301	Adapter, steel	-	-	1
6-9613-41-4101	Plug	-	-	2
6-9613-14-3202	Lock wire	-	-	1
6-9611-99-1988	Air fitting	-	-	2
6-9613-13-2502	Spring assembly	-	-	1
6-519975-09	Lock ring	-	-	1
6-9613-13-3301	Yoke (DN 80)	-	-	1
6-9616-13-3401	Yoke (DN 100)	-	-	1
6-9611-99-1888	Washer	-	-	3
6-9611-99-0360	Nut	-	-	3
6-9611-92-6739	Service kit	O-ring Bushing O-ring O-ring O-ring Support disc O-ring O-ring	- - - - - - - -	2 1 2 1 1 1 1 1
6-9612-45-4001	Service tool for Maintainable actuator	-	-	1

1.0 tf505560.en

Tools

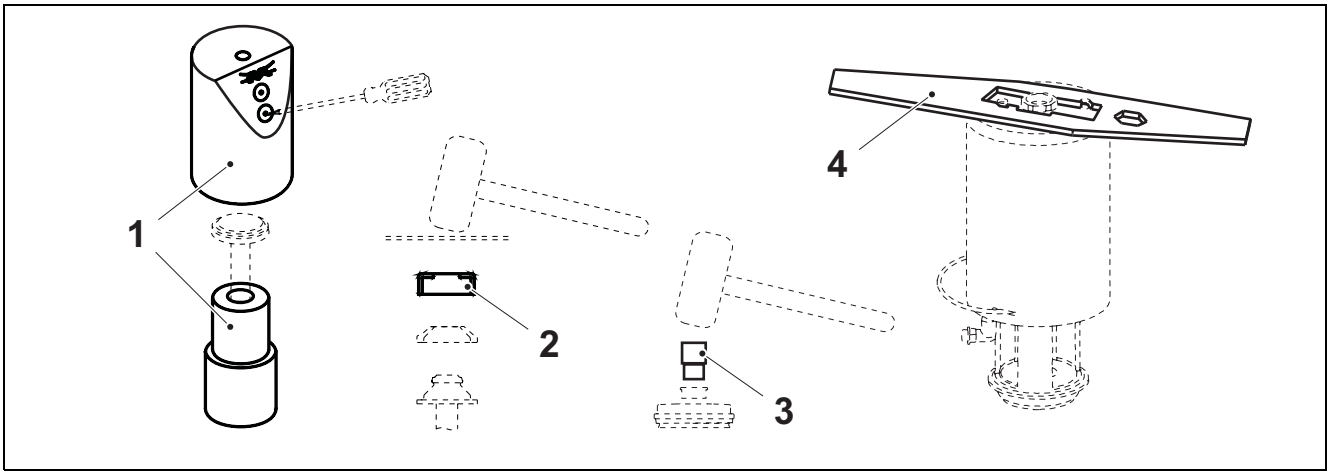

Tool article No.	Size	Description	Pos.	Qty
6-9613-17-2901	DN/OD38	Mounting tool, not for aseptic valve	1	1
6-9613-17-2902	DN/OD51-63.5			
6-9613-17-2903	DN/OD76.1-101.6			
6-9614-06-0001	DN/OD25	Aseptic valve, mounting tool		
6-9614-06-0002	DN/OD38			
6-9614-06-0003	DN/OD51-63.5			
6-9614-06-0004	DN/OD76.1-101.6			
6-9613-16-3206	DN/OD25	Mounting tool for TR2 plugs	2	1
6-9613-16-3201	DN/OD40			
6-9613-16-3202	DN/OD50			
6-9613-16-3203	DN/OD65			
6-9613-16-3204	DN/OD80			
6-9613-16-3205	DN/OD100			
6-9613-16-0901	DN/OD25-101.6	Bushing tool	3	1
6-31353-0219-1	DN/OD25-63.5	Actuator dismantling tool	4	1
6-9612-45-4001	DN/OD76.1-101.6			

1.0 tf505560.en

Tetra Pak

Maintenance & Spare Parts

Back pressure valve
(Tetra Pak)

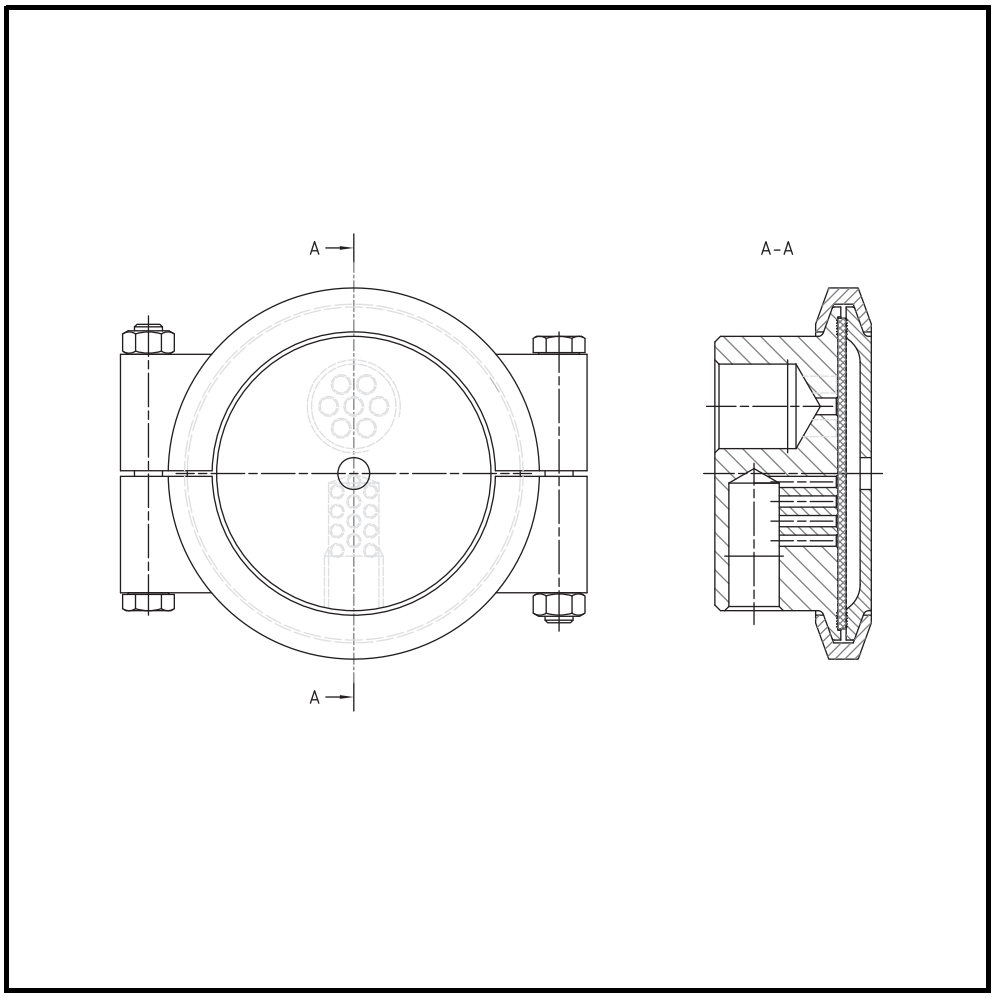

1.0 1223553-0101.fro

Tetra Pak

Doc No. 1223553-0101

Back pressure valve

Article No.

6-3188002351

1.0 1223553-0101.fro

Version 02 Issue 2009-09

Doc No. 1223553-0101

Tetra Pak

Tetra Pak Processing Systems AB

Table of contents

Maintenance 1

Back pressure valve 1

Change diaphragm. 1

Spare parts 3

1.0 1223553-0101.TOC

This page intentionally left blank

Maintenance

Back pressure valve

Change diaphragm

WARNING!

Risk of injury!
Make sure before disassembling, that the pipeline is drained and free from media.

a) Loosen the two nuts (1)
b) Remove the two bolts (2), the clamp (3) and the lid (5).
c) Change the diphragm (6).
d) Replace in revers order.

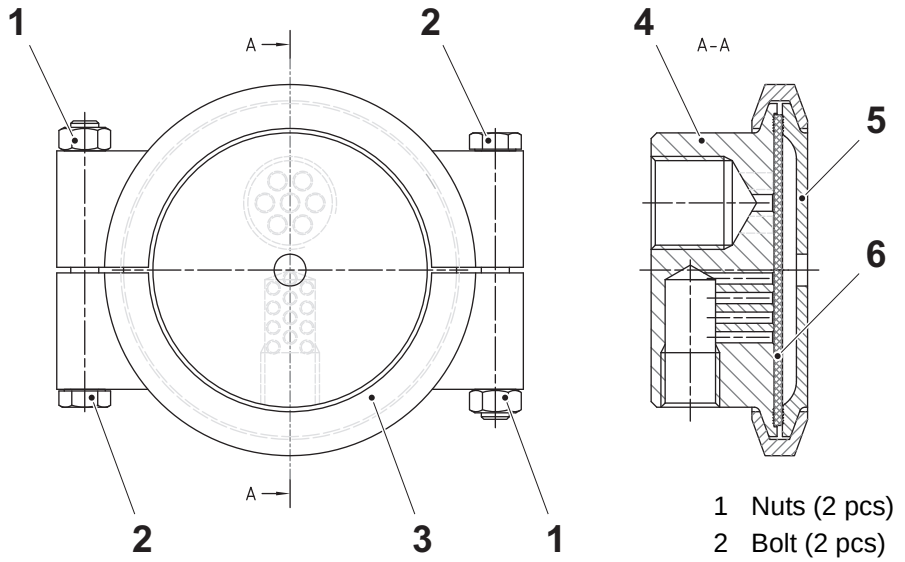

1 Nuts (2 pcs)
2 Bolt (2 pcs)
3 Clamp
4 Valve House
5 Lid
6 Diaphragm

2.2tf506099.en

This page intentionally left blank

2.2tf506099.en

Spare parts

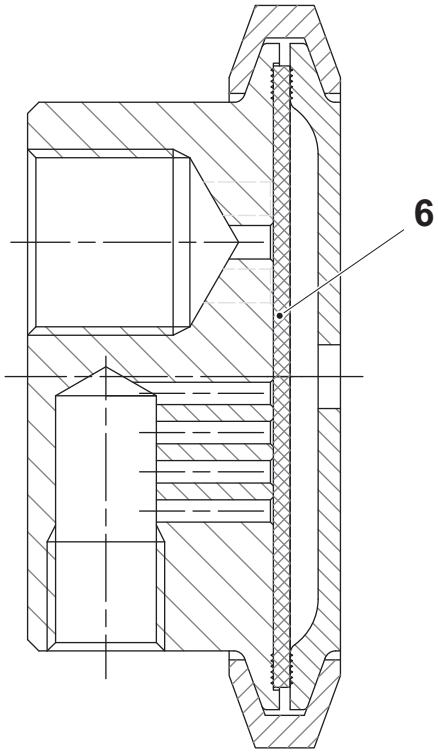

2.2tf506100.en

Component article No.	Spare part article No.	Description	Pos.	Qty.
6-3188002351	6-31880-0238-1	Diaphragm	1	1

Tetra Pak

Maintenance & Spare Parts

Ball valve

(Meca-Inox)

PS4/PZ4



1.0 1224238-0101.fro

Tetra Pak

Doc No. 1224238-0101

Ball valve

PS4/PZ4

This document refers to components specified in Technical Manual, on Maintenance & Spare Parts CD/DVD or on Tetra Pak Intranet.

1.0 1224238-0101.fro

Version 03 Issue 2011-01

Doc No. 1224238-0101

Tetra Pak

Tetra Pak Processing Systems AB

Function Description 1
Valve 1
Actuator 2
Maintenance 3
Change actuator 3
Disassemble actuator 5
Assemble actuator 10
Change valve 14
Remove valve body 14
Disassemble valve 15
Assemble valve 15
Spare Parts 16
Valve PS4/PZ4 16
Actuator C-type 19

1.0 1224238-0101.Toc

This page intentionally left blank

Function Description

Valve

PS4/PZ4 3-piece, shut-off ball valve



PS4 3-piece, Type 3VLH, 3-way diverting and mixing ball valve



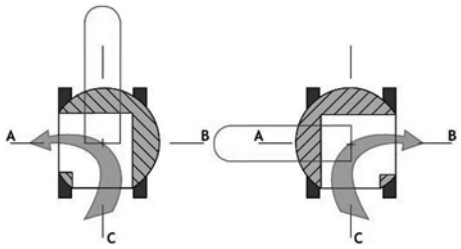

2.2tf506457.en

(Cont'd)

(Cont'd)

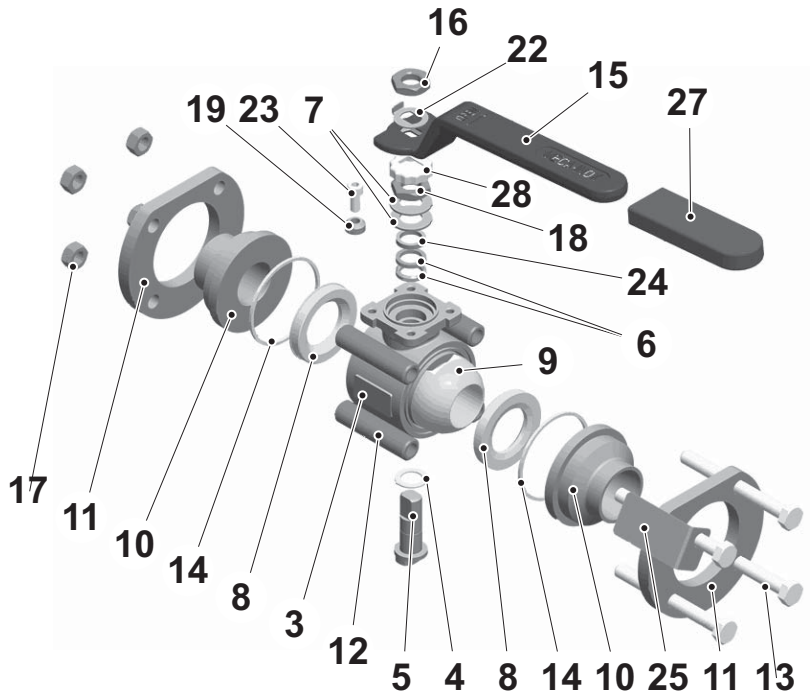

3 Body
4 Stem thrust seal
5 Stem
6 Gland packing
7 Spring washers
8 Seat
9 Ball
10 Loose/fixed/flanged end
11 Body flange
12 Distance piece
13 Screw
14 Body seal
15 Handle
16 Lever nut
17 Nut
18 Nut gland
19 Stop ring
22 Nut stop
23 Screw stop
24 Gland
25 ID label
27 Plastic cover
28 Stop nut gland

Actuator

Actuator type Trutorq, size 12/20/35/55

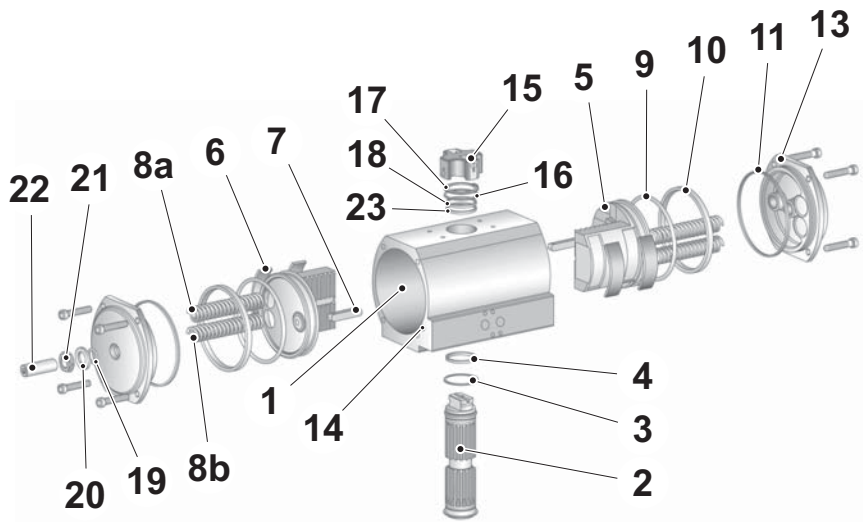

1 Body
2 Driveshaft
3 Washer
4 O-ring
5 Piston
6 Wear pads
7 Guide bar
8a Spring, outer
8a Spring, inner
9 O-ring
10 Back-up bearing
11 O-ring
12 End cap
13 End cap bolt
14 Ball seal
15 Position indicator
16 Washer
17 Circlip
18 O-ring
19 Stop adjustment O-ring
20 Stop adjustment O-ring
21 Stop adjustment nut
22 Stop adjustment screw
23 Driveshaft upper bearing

2.2tf506457.en

Maintenance

WARNING!

Risk of injury!
Make sure before dismantling, that the pipeline is drained and free from media.
Make sure that the air to the actuator is depressurized.

Change actuator

a) Loosen air connections.

b) Loosen screws (32).

c) Remove the actuator (31).

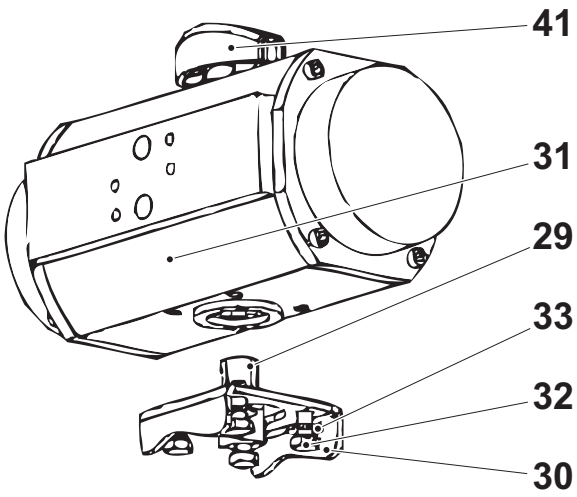

2.2tf506457.en

Disassemble mounting kit

a) Remove valve coupling port (29) and handle adaptor (19) if DN is 65 to 200.

b) Loosen screws (39) and remove the kit bracket.

DN 10 to 50

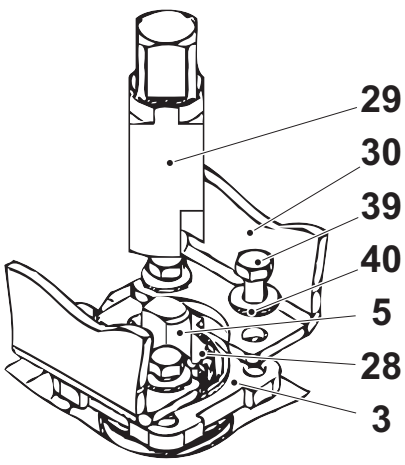

DN 65 to 200

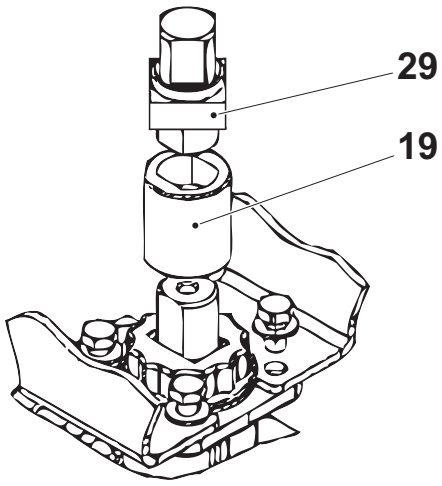

Assemble mounting kit

a) Position the kit (30) on valve ISO top flange (03).

b) Check that nut stop (28) is mounted.

c) Position the 4 washers (40) and the 4 screws (39) and tighten them all.

d) Body dimension DN10 to 50: position coupling port (29) and the valve stem (5).
DN65 to 100: handle adaptor (19) on the valve stem (5) and insert coupling part (29) into the handle adaptor (19).

Assemble spring return actuator (SE)

Actuator is delivered in closed position when Failure Close and in open position when Failure Open. When Failure close, it is necessary to close the valve either with lever or any appropriate tool by turning a 1/4 turn the valve stem (5). In case of Failure Open, make sure that the valve is in the open position.

a) Insert actuator (31) onto the coupling part.

b) Position the washers (33) and the screws (32).

c) Check actuator position (perpendicular to the valve).

d) Screw and tighten.

Assemble double-acting actuator (DE)

The actuator is supplied in closed position. Visual indicator (41) is perpendicular to the actuator body (31).

a) Position the actuator (3l) in the open position.

b) Check that valve is in the open position.

c) Insert actuator (31) onto coupling part (29).

d) Position the washers (33) and screws (32).

e) Check actuator position (must be perpendicular to the valve).

f) Screw and tighten.

2.2tf506457.en

Disassemble actuator

WARNING!

Risk of injury!
Make sure that the air to the actuator is depressurized.
Always isolate the actuator pneumatically or hydraulically and electrically.
Always remove all accessories and mounting hardware prior to maintenance.

These instructions serve both E-Type and C-Type actuators. Most of the components for both units are the same.

E-TYPE parts list

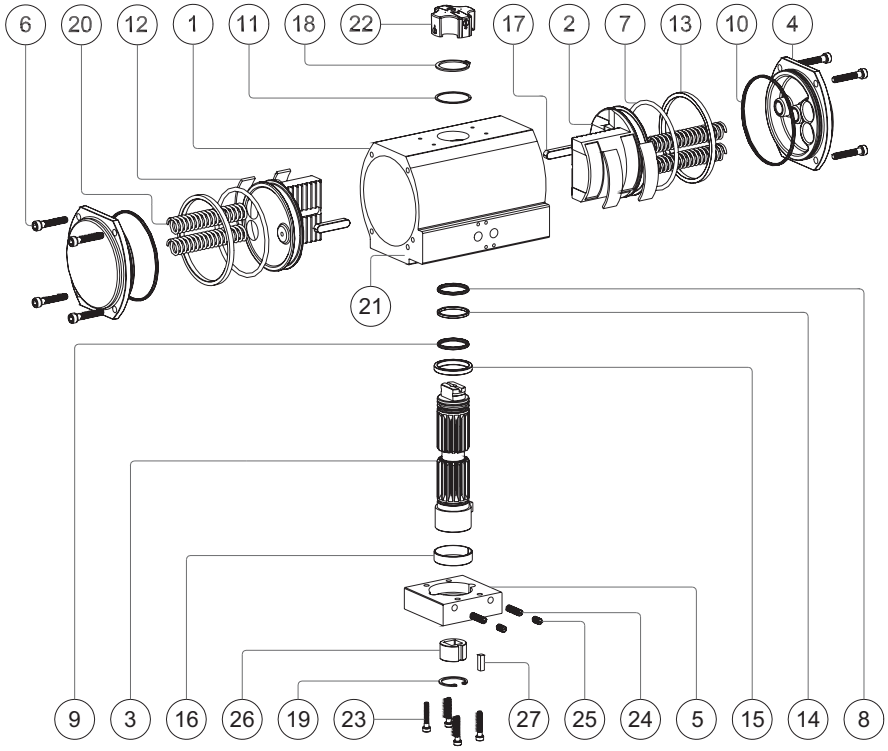

2.2tf506457.en

1 Cylinder 1
2 Piston 2
3 Driveshaft 1
4 End cap 2
5 Body adaptor 1
6 End cap bolt 8
7 Piston O-ring 2
8 Driveshaft upper O-ring 1
9 Driveshaft lower O-ring 1
10 End cap O-ring 2
11 Washer 1
12 Wear pads 4
13 Backup bearing 2
14 Driveshaft upper bearing 1
15 Driveshaft lower bearing 1
16 Body adaptor bearing 1
17 Guide bar 2
18 Circlip upper 1
19 Circlip lower 1
20 Spring 4
21 Ball bearing 2
22 TruVision indicator 1
23 Body adaptor bolts 4
24 Stop adjustment screws 2
25 Lock screws 2
26 Insert sleeve 1
27 Insert sleeve key 1

(Cont'd)

(Cont'd)

C-TYPE parts list

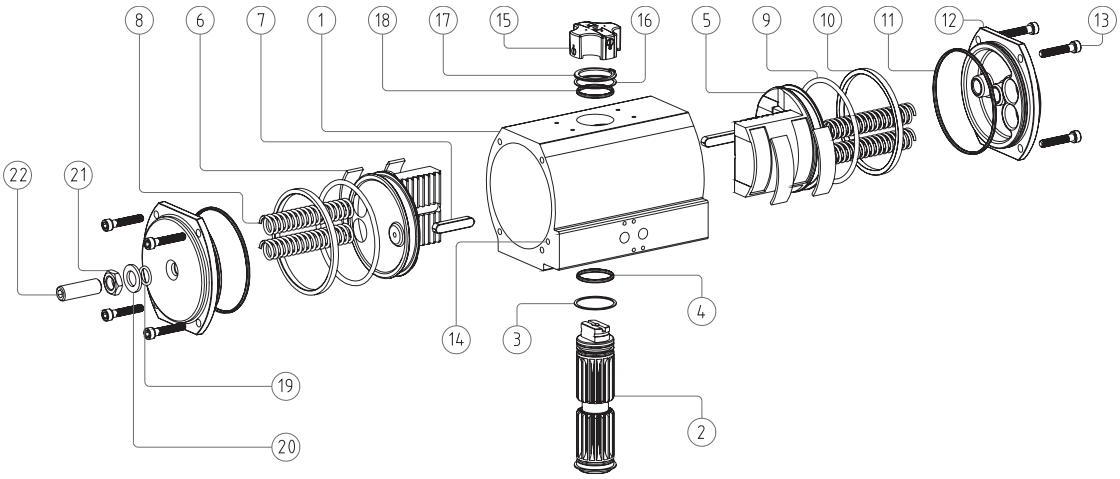

1	Body	9	O-ring	17	Circlip
2	Driveshaft	10	Back-up bearing	18	O-ring
3	Washer	11	O-ring	19	Stop adjustment O-ring
4	O-ring	12	End cap	20	Stop adjustment washer
5	Piston	13	End cap bolt	21	Stop adjustment nut
6	Wear pads	14	Ball seal	22	Stop adjustment screw
7	Guide bar	15	Position indicator		
8	Spring	16	Washer		

2.2tf506457.en

a) Remove stop end lock screws from both adjustment holes.

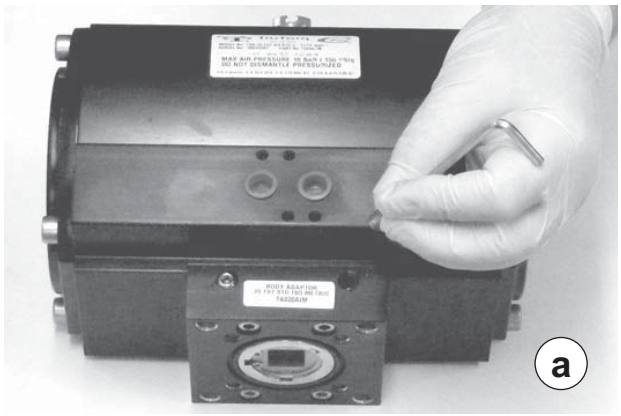

(Cont'd)

(Cont'd)

b) Loosen the stop adjustments screws, still inside the adaptor, so they do not interfere with removal of the body adaptor kit.

c) Remove the 4 screws of body adaptor.

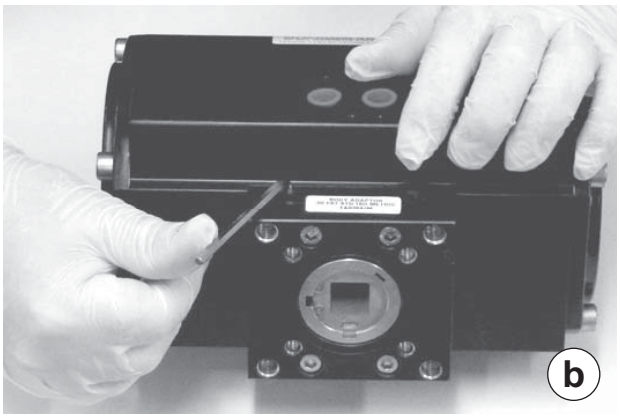

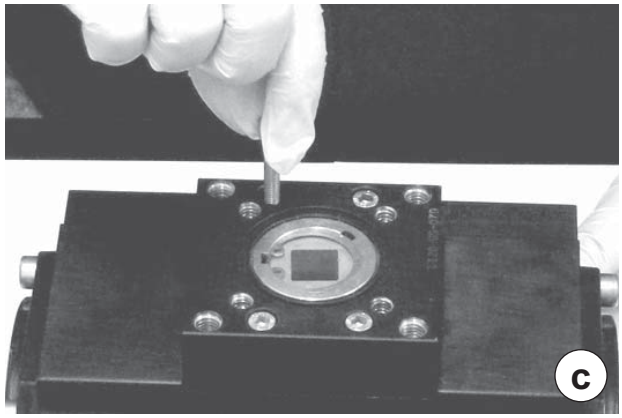

d) Remove the body adaptor and check the adaptor bearing for any wear.

e) The bottom view with the adaptor removed. This shows the shaft, the insert sleeve and its retaining clip and the drive cam.



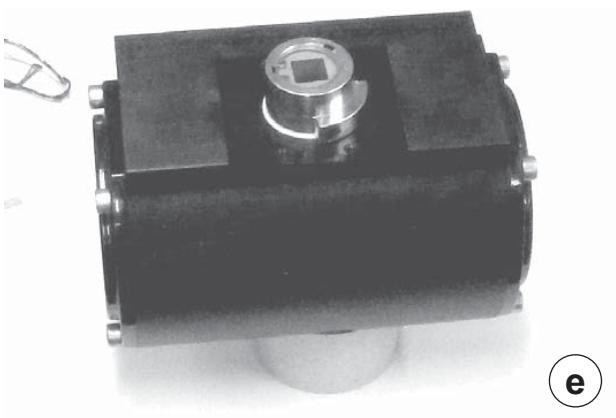

2.2tf506457.en

(Cont'd)

(Cont'd)

Note! Double acting and spring return end caps are the same on Trutorq E-Type and C-type actuators.
The end cap bolts on ALL Trutorq actuators are long enough in order to fully relax the springs.
It is recommended that a hydraulic ram/press is used on large bore actuators for better assistance and ease of disassembly and reassembly.

f) Unscrew the end cap bolts diagonally (opposite pair) one full turn at a time until fully relaxed.

g) Please note how the bolts are allowing the end cap to remain horizontal as the bolts are being unscrewed evenly.



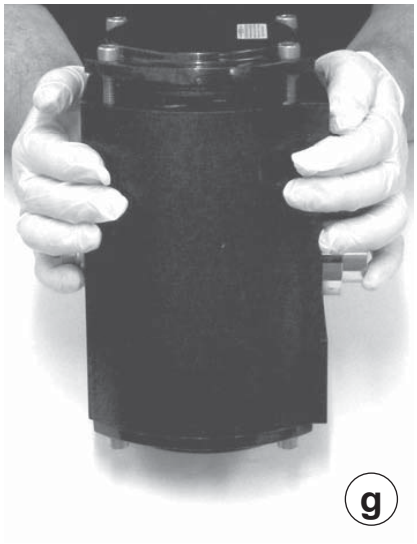

2.2tf506457.en

h) The E & C-type springs are located on the inside of the piston racks and therefore only on one side of the piston.

i) Note the two outer springs and two inner springs. This is the same arrangement on both sides of the actuator.

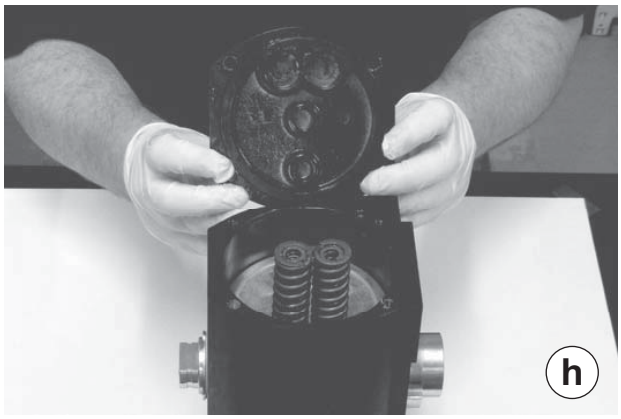

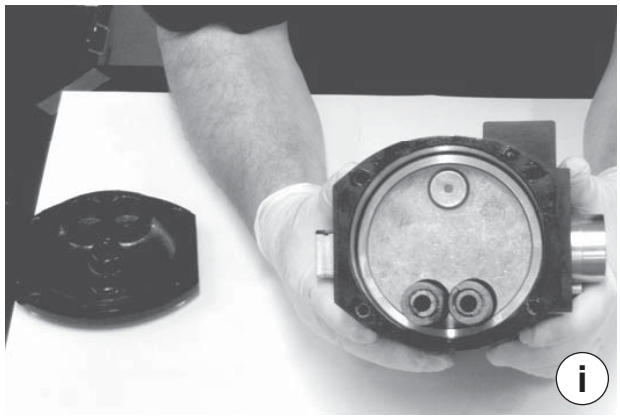

(Cont'd)

(Cont'd)

j) Using the appropriate tool, turn the top of the shaft counterclockwise as this will push the pistons out of the body.

k) Note the two pistons, fully greased, with dual wearpads on the back of the racks and the O-ring and backup bearing on the circumference of the piston face.

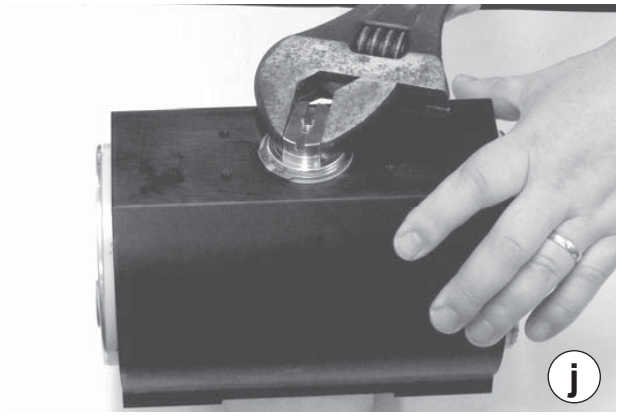

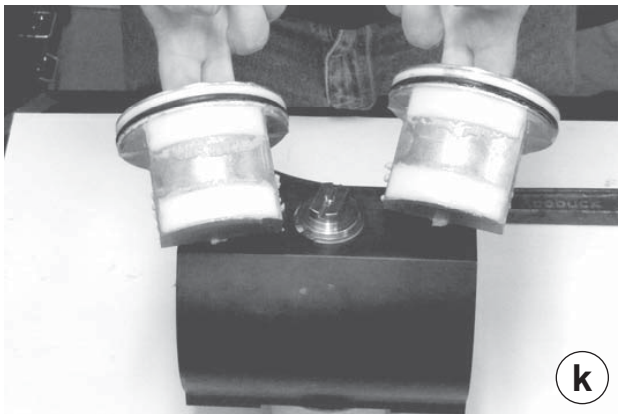

l) Using external dropnose Circlip pliers, remove the Circlip from the top of the driveshaft, then remove the driveshaft washer.

m) Gently loosen the shaft by tapping the top of it with a rubber or wooden mallet. Turn the actuator upside down and remove the driveshaft from the bottom out.

2.2tf506457.en



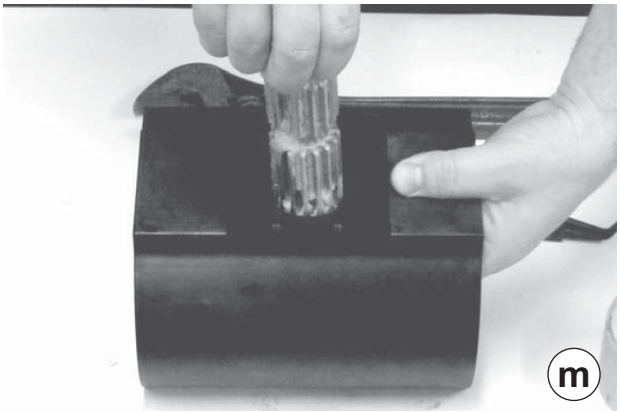

Assemble actuator

Caution! Ensure all internal porting is clear and free from foreign particles.

Note! For lubrication use Berulub FR16 to the actuator and Valvoline L-EP2 to the springs.

- Check that the driveshaft and piston rack teeth/gears do not have excessive wear. If worn, replace driveshaft, pistons and guide bars.
- Check that piston wearpads, shaft bearings and piston backup bearings do not have excessive wear. If worn, replace the relevant bearings. All necessary bearings are included in the Trutorq repair kit.
- For spring return actuators, check that springs are not damaged. If damaged, replace springs. Springs must always be replaced as a complete spring kit. Do not mix old with new.
- Check that internal bore of actuator body is not scored/scratched. If there is any damage, replace the body.
- Prior to assembly, lubricate all O-rings and bearings with the above mentioned actuator lubricant. Use the same lubricant for all grooves where the seals and bearings are to be placed. For spring return actuators, ensure springs are generously lubricated prior to assembly/ insertion.

a) Place lower bearing on shaft, followed by lower O-ring, grease well, now place upper O-ring, followed by the upper bearing. Grease well.

b) Insert the driveshaft into the bottom of the body, being careful not to “pinch” the O-rings on insertion, then push the shaft all the way in.

2.2tf506457.en

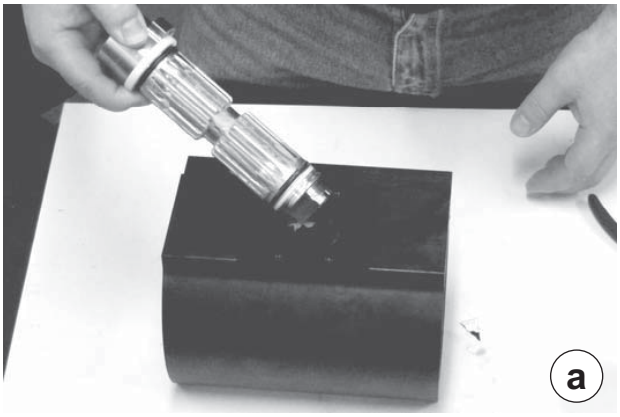

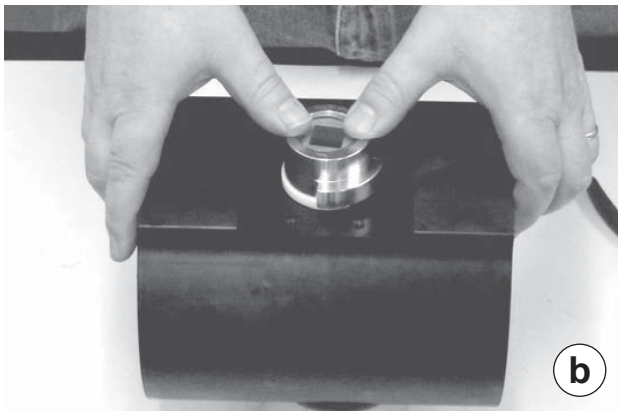

(Cont'd)

(Cont'd)

c) Place the washer over the top of the driveshaft.

d) Using external dropnose Circlip pliers, place and fasten the upper Circlip around the top of the driveshaft.

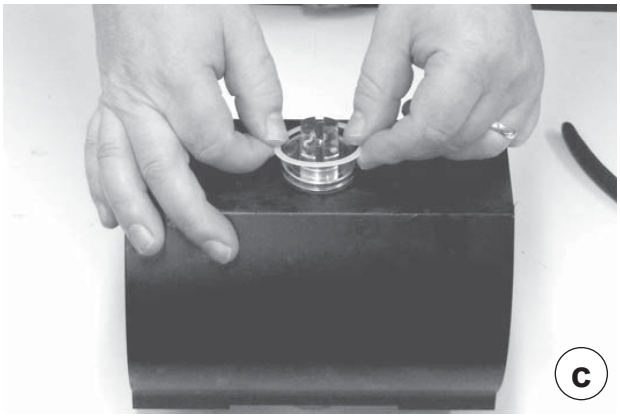

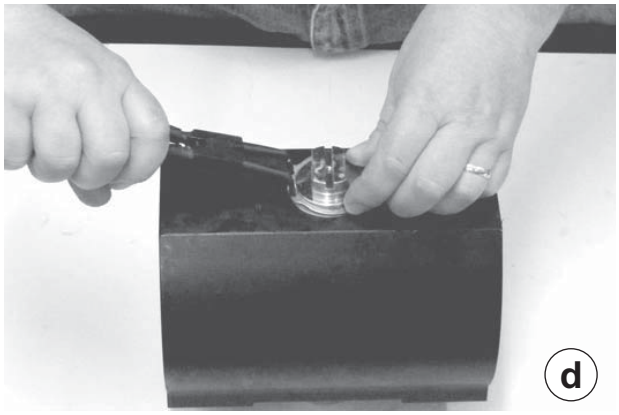

e) Insert the piston wearpads into the grooves on the back of the piston rack. Place the O-ring into the piston circumference groove, followed by the piston backup bearing, ensuring that it is placed to the back of the piston with the O-ring nestled inside the groove of the backup bearing. Replace guide bar in piston rack groove only if necessary.

f) Align driveshaft DD in line with body (airports facing away) and driveshaft cam on the right side. Rotate the shaft 45 degrees (3-4 teeth) counterclockwise (CCW). Insert the right piston with the wear pads facing you and the left piston with the rack teeth facing you.

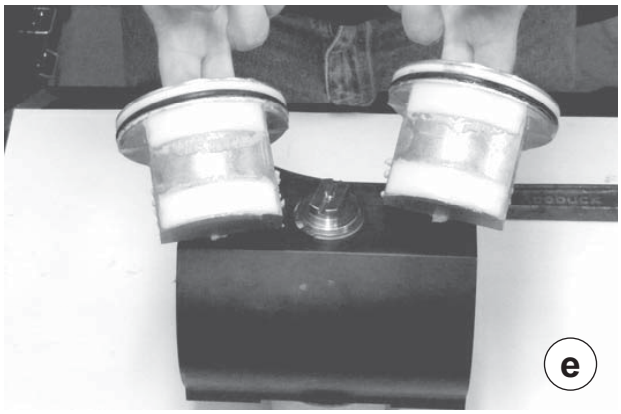

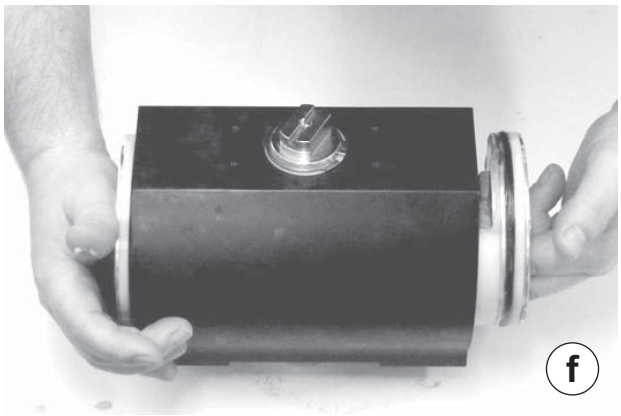

(Cont'd)

2.2tf506457.en

(Cont'd)

Note! For normally open assembly, the pistons should be rotated by 180 degrees about their own axis (right piston rack facing you, left piston wearpads facing you) and the driveshaft cam on the left side.

g) With the pinion and rack slightly engaged, push both pistons into the actuator as far as possible.

h) Rotate the driveshaft clockwise (CW) to the closed position. The DD on the shaft should be at 90 degrees to the body (plus a little extra due to over-travel) in the fully closed position.

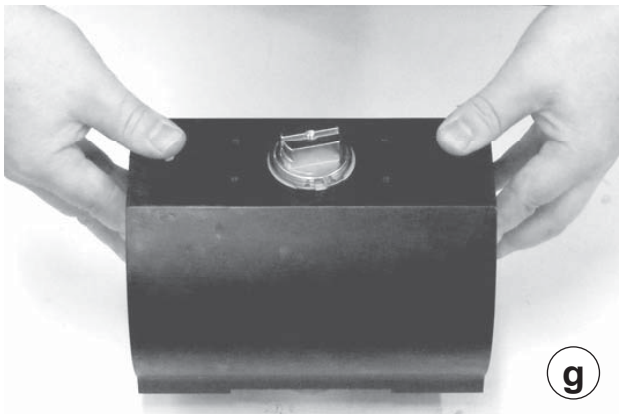

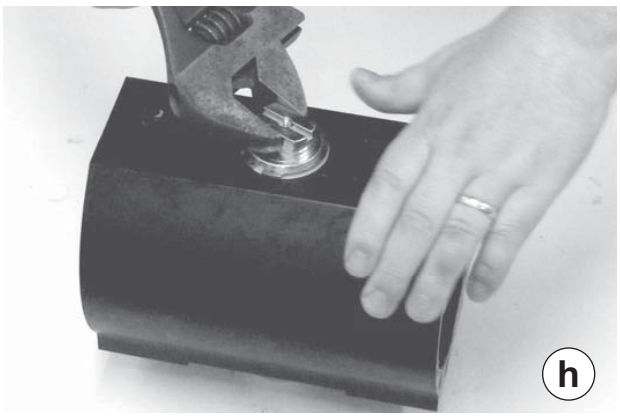

Caution! Larger actuators may require more than one person to perform maintenance.

i) For spring return actuators, insert the springs into each piston as required (ensuring springs are well greased). Place the end cap over the springs, making sure that the springs locate correctly in the two recesses inside the end cap.

j) Locate the end cap bolts and screw in slightly. Now using the correct tool screw in the bolts diagonally (opposite pair) until fastened. Ensure that the end cap locates evenly in order to avoid O-ring damage due to “pinching”.

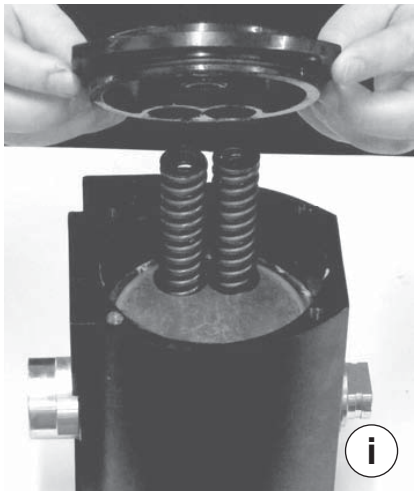



(Cont'd)

2.2tf506457.en

(Cont'd)

k) Insert the bearing into the body adaptor and place of the driveshaft ensuring that the stop bolts face out to the front of the actuator where the airports are located (does not apply to C-type).

l) Using the correct tool, fasten the 4 screws of body adaptor (does not apply to C-type).



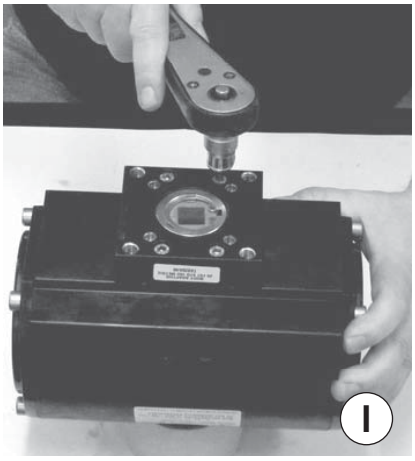

m) Using long nose internal Circlip pliers, remove the retaining Circlip that holds in the insert sleeve.

n) Remove the insert sleeve from the driveshaft and relocate as necessary. There are three keyways that allow for in-line, 45-degree and 90-degree location of the sleeve.

2.2tf506457.en





o) Mount stop end lock screws from both adjustment holes.

Change valve

WARNING!

Risk of injury!
Make sure before dismantling, that the pipeline is drained and free from media.

Remove valve body

a) Set valve to open position.

b) Loosen one nut if DN 10 to 50 and three or more if necessary, for DN 65 to 150.

c) Pull out the screw almost all the way out.

d) Remove the valve assembly.

Valve assembly body
DN 10 to 50

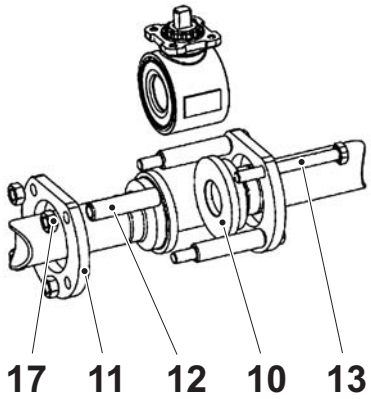

Valve assembly body
DN 65 to 150

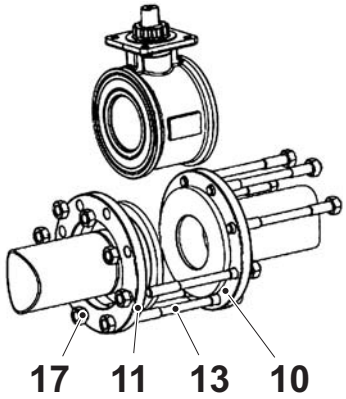

2.2tf506457.en

Mount valve body in reverse order. Tighten screws (13) and nuts (17) according to table on the next page.

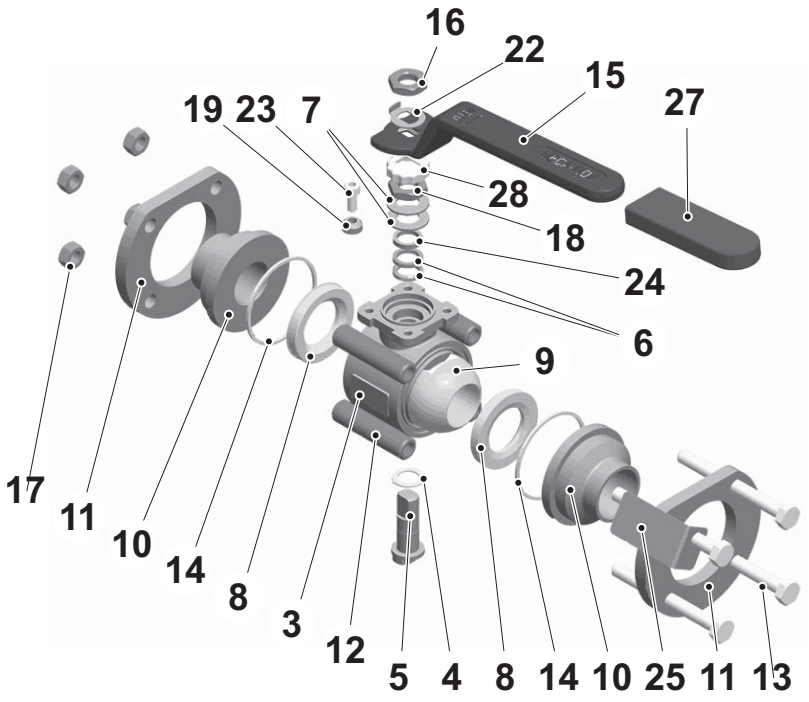

Disassemble valve

a) Set valve in closed position.

b) For manually operated ball valve, remove lever nut (16), nut stop (22) and handle (15).

c) Push the ball (9) outside of the body. Seats (8) will be pushed as well.

d) Take out nut lock (28) and unscrew the nut (18).

e) Take out spring washers (7) and gland (24).

f) Push the stem (5) inside the valve - the stem seal keeps staying on the stem.

g) Take out stem (5) and replace stem seal (4)

h) Take out packing (6) from valve body and replace with a new one.

Assemble valve

Assemble in reverse order.

Note! Screw packing nut (18) following torques values in table below.

Note! Do not forget to refit the nut stop.

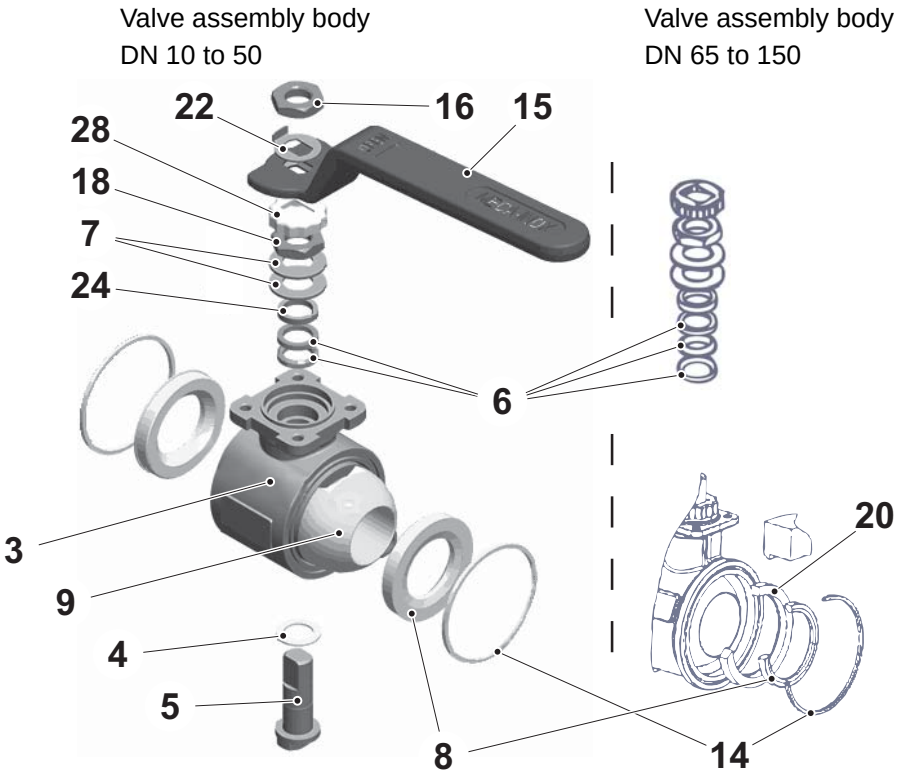

Size	Full-bore hole	8	12	15	20	25	32	40	50	65	80	100	125	150
	Reduced hole	**---**	**15**	**20**	**25**	**32**	**40**	**50**	**65**	**80**	**100**	**125**	**150**	**200**
Torque Nm	Packing nut (18)	4	4	4	8	8	12	12	16	35	35	35	50	50
	Assembly screws/nuts (13/17)	10	10	10	22	22	40	40	60	80	80	80	100	100

Spare Parts

Valve PS4/PZ4

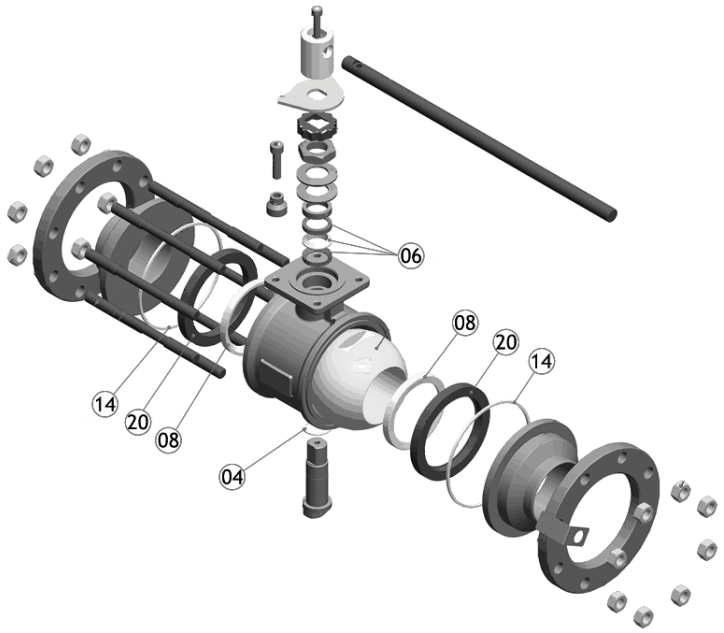

Type	Body size DN	Spare parts Article No.	Description	Included parts.	Pos.	Qty
PS4	10	90511-2548	Spare part kit ball valve	Seats	8	2
				Body seal	14	2
				Gland packing	6	1
				Stem thrust seal	4	1
PS4	15	90511-2551	Spare part kit ball valve	Seats	8	2
				Body seal	14	2
				Gland packing	6	1
				Stem thrust seal	4	1
PS4	20	90511-2552	Spare part kit ball valve	Seats	8	2
				Body seal	14	2
				Gland packing	6	1
				Stem thrust seal	4	1
PS4	25	90511-2553	Spare part kit ball valve	Seats	8	2
				Body seal	14	2
				Gland packing	6	1
				Stem thrust seal	4	1

Note! Seat holder available as from DN65.

2.2tf506458.en

PS4	32	90511-2554	Spare part kit ball valve	Seats	8	2
				Body seal	14	2
				Gland packing	6	1
				Stem thrust seal	4	1
PS4	40	90511-2555	Spare part kit ball valve	Seats	8	2
				Body seal	14	2
				Gland packing	6	1
				Stem thrust seal	4	1
PS4	50	90511-2556	Spare part kit ball valve	Seats	8	2
				Body seal	14	2
				Gland packing	6	1
				Stem thrust seal	4	1
PS4	65	90511-2557	Spare part kit ball valve	Seats	8	2
				Seat holder	20	2
				Body seal	14	2
				Gland packing	6	1
				Stem thrust seal	4	1
PS4	80	90511-2558	Spare part kit ball valve	Seats	8	2
				Seat holder	20	2
				Body seal	14	2
				Gland packing	6	1
				Stem thrust seal	4	1
PS4	100	90511-2590	Spare part kit ball valve	Seats	8	2
				Seat holder	20	2
				Body seal	14	2
				Gland packing	6	1
				Stem thrust seal	4	1

Note! Seat holder available as from DN65.

2.2tf506458.en

PZ4	10	90511-4408	Spare part kit ball valve	Seats	8	2
				Body seal	14	2
				Gland packing	6	1
				Stem thrust seal	4	1
PZ4	15	90511-4409	Spare part kit ball valve	Seats	8	2
				Body seal	14	2
				Gland packing	6	1
				Stem thrust seal	4	1
PZ4	20	90511-4410	Spare part kit ball valve	Seats	8	2
				Body seal	14	2
				Gland packing	6	1
				Stem thrust seal	4	1
PZ4	25	90511-4411	Spare part kit ball valve	Seats	8	2
				Body seal	14	2
				Gland packing	6	1
				Stem thrust seal	4	1
PZ4	32	90511-4412	Spare part kit ball valve	Seats	8	2
				Body seal	14	2
				Gland packing	6	1
				Stem thrust seal	4	1
PZ4	40	90511-4413	Spare part kit ball valve	Seats	8	2
				Body seal	14	2
				Gland packing	6	1
				Stem thrust seal	4	1
PZ4	50	90511-4414	Spare part kit ball valve	Seats	8	2
				Body seal	14	2
				Gland packing	6	1
				Stem thrust seal	4	1
PZ4	65	90511-5935	Spare part kit ball valve	Seats	8	2
				Seat holder	20	2
				Body seal	14	2
				Gland packing	6	1
				Stem thrust seal	4	1
PZ4	80	90511-5936	Spare part kit ball valve	Seats	8	2
				Seat holder	20	2
				Body seal	14	2
				Gland packing	6	1
				Stem thrust seal	4	1

2.2tf506458.en

Note! Seat holder available as from DN65.

Note! If changing material in seats from PS4 original to PZ4, the actuator for body size 50 and 80 must be upgraded one size.

Actuator C-type

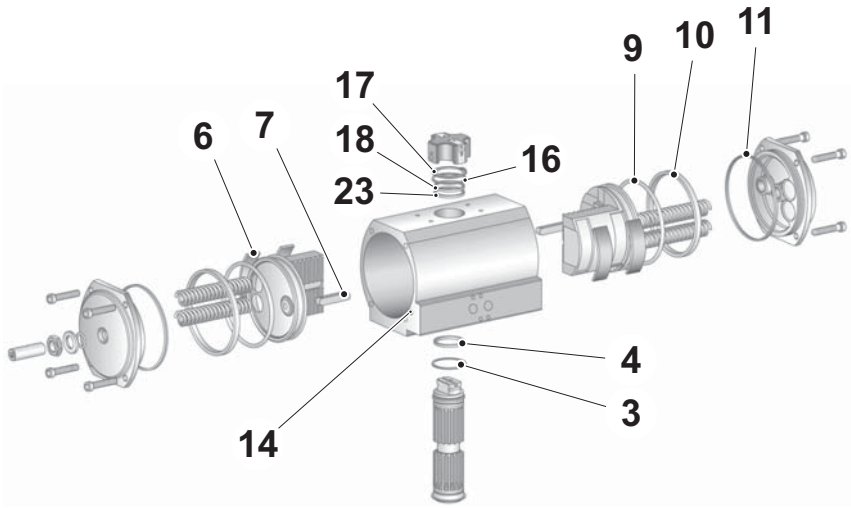

Actuator size	Valve body size DN, Type	Spare parts Article No.	Description	Included parts.	Pos.	Qty
2TSR003	10-15, PS4 10-15, PZ4	90511-2559	Spare seal kit for actuator	Washer	3	1
				O-ring	4	1
				Wear pads	6	4
				Guide bar	7	2
				O-ring	9	2
				Back-up bearing	10	2
				O-ring	11	2
				Ball seal	14	2
				Washer	16	1
				Circlip	17	2
				O-ring	18	1
				Driveshaft upper bearing	23	1
2TSR005	20-25, PS4 20-25, PZ4	90511-2560	Spare seal kit for actuator	Washer	3	1
				O-ring	4	1
				Wear pads	6	4
				Guide bar	7	2
				O-ring	9	2
				Back-up bearing	10	2
				O-ring	11	2
				Ball seal	14	2
				Washer	16	1
				Circlip	17	2
				O-ring	18	1
				Driveshaft upper bearing	23	1

2.2tf506458.en

2TSR008	32, PS4 32, P**Z**4	90511-2561	Spare seal kit for actuator	Washer	3	1
				O-ring	4	1
				Wear pads	6	4
				Guide bar	7	2
				O-ring	9	2
				Back-up bearing	10	2
				O-ring	11	2
				Ball seal	14	2
				Washer	16	1
				Circlip	17	2
				O-ring	18	1
				Driveshaft upper bearing	23	1
2TSR012	40-50, PS4 40, P**Z**4	90511-2562	Spare seal kit for actuator	Washer	3	1
				O-ring	4	1
				Wear pads	6	4
				Guide bar	7	2
				O-ring	9	2
				Back-up bearing	10	2
				O-ring	11	2
				Ball seal	14	2
				Washer	16	1
				Circlip	17	2
				O-ring	18	1
				Driveshaft upper bearing	23	1
2TSR020	50, P**Z**4	90511-5940	Spare seal kit for actuator	Washer	3	1
				O-ring	4	1
				Wear pads	6	4
				Guide bar	7	2
				O-ring	9	2
				Back-up bearing	10	2
				O-ring	11	2
				Ball seal	14	2
				Washer	16	1
				Circlip	17	2
				O-ring	18	1
				Driveshaft upper bearing	23	1

2.2tf5064458.en

2TSR035	65, PS4 65, P**Z**4 80, PS4	90511-2563	Spare seal kit for actuator	Washer	3	1
				O-ring	4	1
				Wear pads	6	4
				Guide bar	7	2
				O-ring	9	2
				Back-up bearing	10	2
				O-ring	11	2
				Ball seal	14	2
				Washer	16	1
				Circlip	17	2
				O-ring	18	1
				Driveshaft upper bearing	23	1
2TSR055	80, P**Z**4 100, PS4 100, P**Z**4	90511-2564	Spare seal kit for actuator	Washer	3	1
				O-ring	4	1
				Wear pads	6	4
				Guide bar	7	2
				O-ring	9	2
				Back-up bearing	10	2
				O-ring	11	2
				Ball seal	14	2
				Washer	16	1
				Circlip	17	2
				O-ring	18	1
				Driveshaft upper bearing	23	1

(Cont'd)

2.2tf506458.en

(Cont'd)

Combination Actuator and Mounting bracket kit

Size ID	Valve type	Valve body size DN	Spare parts Article No.	Mounting bracket kit
2TSR003+KPND010	PS4, PZ4	DN10 DN15	90511-3183	KPNI410 0411
2TSR005+KPND020	PS4, PZ4	DN20 DN25	90511-3184	KPNI420 0514
2TSR008+KPND032	PS4, PZ4	DN32	90511-3185	KPNI432 0514
2TSR012+KPND032	PS4, PZ4	DN40	90511-3186	KPNI432 0717
2TSR012+KPND050	PS4	DN50	90511-3187	KPNI450 0717
2TSR020+KPND050	PZ4	DN50	90511-5933	KPNI2P050 0717
2TSR035+KPND065	PS4, PZ4	DN65	90511-3188	KPNI2P065 1022
2TSR035+KPND080	PS4	DN80	90511-3189	KPNI2P080 1022
2TSR055+KPND080	PZ4	DN80	90511-5934	KPNI2P080 1227
2TSR055+KPND100	PS4, PZ4	DN100	90511-3190	KPNI2P100 1227

2.2tf506458.en

This page intentionally left blank

2.2tf506458.en

Tetra Pak

Maintenance & Spare Parts

Non-return valve

(Südmo)

P750



1.0 1224311-0101.fro

Tetra Pak

Doc No. 1224311-0101

Non-return valve

P750

Article No.	Size
90517-2817	DN40
90517-2818	DN50
90517-2819	DN65
90517-2820	DN80
90517-2821	DN100
90522-7590	0.5”
90517-2812	1.5”
90517-2813	2”
90517-2814	2.5”
90517-2815	3”
90517-2816	4”

1.0 1224311-0101.fro

Version 04 Issue 2016-12

Doc No. 1224311-0101

Tetra Pak

Tetra Pak Processing Systems AB

Table of contents

Maintenance 1

Function description. 1

Change. 2

Clean 3

Spare Parts 4

1.0 1224311-0101.TOC

This page intentionally left blank

Maintenance

Function description.

Non-return valves are used in applications where a backflow needs to be avoided.

2.2tf506509.en

Change

WARNING!

Risk of injury!
Depressurize resorvoir and pipng system, drain all liquid.

Disassemble

a) Remove Hexagon screws (1, 2).
b) Remove Complete valve (3).
c) Remove O-ring (4).
d) Remove O-ring (5).
e) Remove Disc valve (6). Pay due regard to spring force!
f) Remove Compression spring (7).
g) Remove Valve disc (8).
h) Remove O-ring (9).
i) Assemble in reserve order.

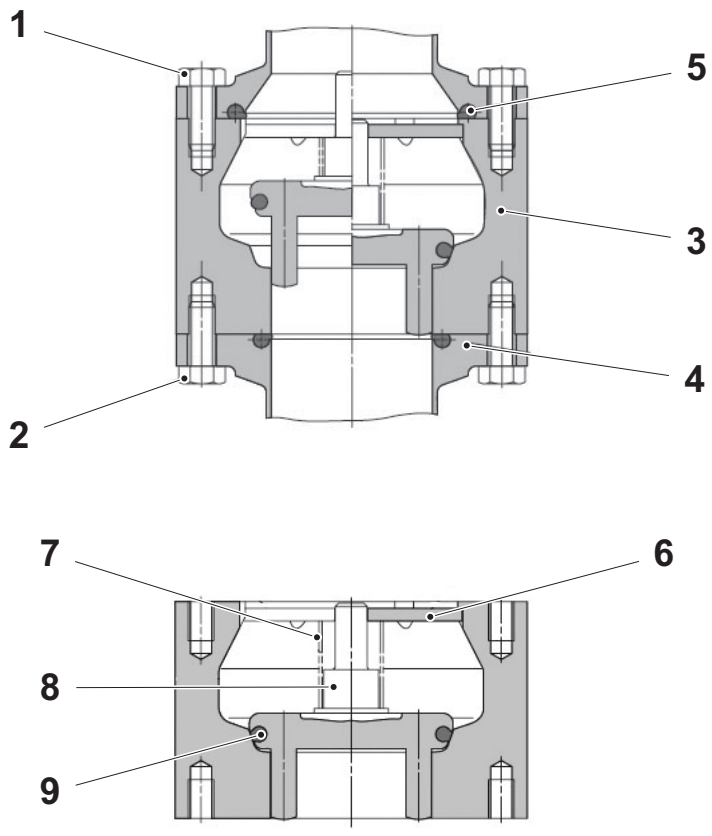

2.2tf506509.en

1 Hexagon screw
2 Hexagon screw
3 Valve
4 O-ring
5 O-ring
6 Disc guide
7 Compression spring
8 Remove valve disc
9 O-ring

Clean

Valve inner chambers must be cleaned regularly. Only use detergents which are non-abrasive and non-aggressive towards seals and stainless steel.

Check visually that all seals are free from leaks. Defective seals must be replaced.

2.2tf506509.en

Spare Parts

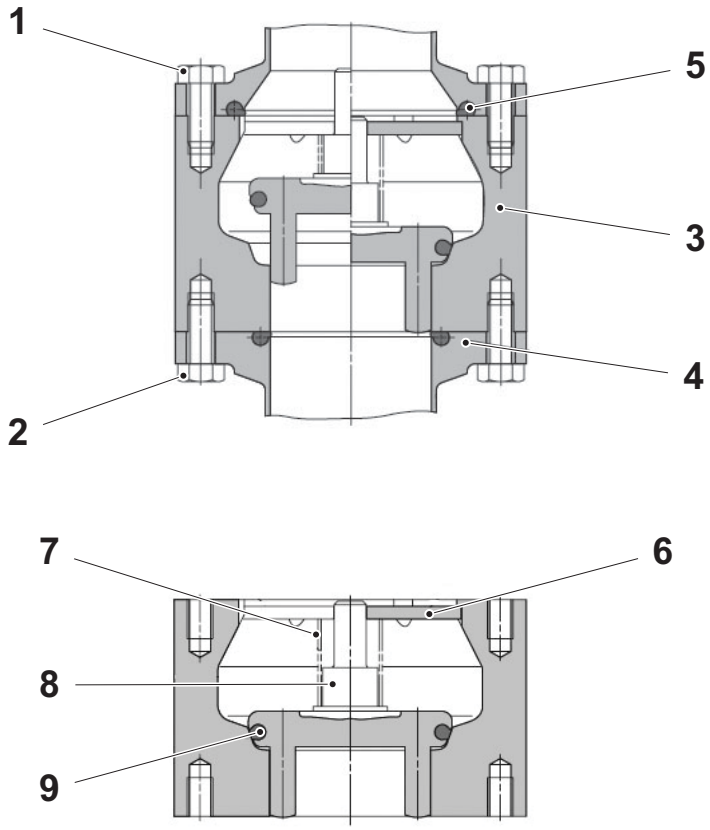

2.2tf5065l0.en

Component article No.	Spare parts Article No.	Description	Included parts.	Pos.	Qty
90522-7590	90523-0037	Seal kit P750 mod 2005/2010 DN15/0,5" EPDM	Disc O-ring Housing O-ring Flange O-ring Compression spring	5 4 9 7	1 1 1 1
90517-2812 90517-2817	90511-4417	Seal kit P750 mod 2005/2010 DN40/1,5" EPDM	Disc O-ring Housing O-ring Flange O-ring Compression spring	5 4 9 7	1 1 1 1
90517-2813 90517-2818	90511-4418	Seal kit P750 mod 2005/2010 DN50/2" EPDM	Disc O-ring Housing O-ring Flange O-ring Compression spring	5 4 9 7	1 1 1 1
90517-2814 90517-2819	90511-4419	Seal kit P750 mod 2005/2010 DN65/2,5" EPDM	Disc O-ring Housing O-ring Flange O-ring Compression spring	5 4 9 7	1 1 1 1
90517-2815 90517-2820	90511-4420	Seal kit P750 mod 2005/2010 DN80/3" EPDM	Disc O-ring Housing O-ring Flange O-ring Compression spring	5 4 9 7	1 1 1 1

90517-2816 90517-2821	90511-4421	Seal kit P750 mod 2005/2010 DN100/4" EPDM	Disc O-ring Housing O-ring Flange O-ring Compression spring	5 4 9 7	1 1 1 1

2.2tf506510.en

Tetra Pak

Maintenance & Spare Parts

Regulating Valve

(Samson)

3241

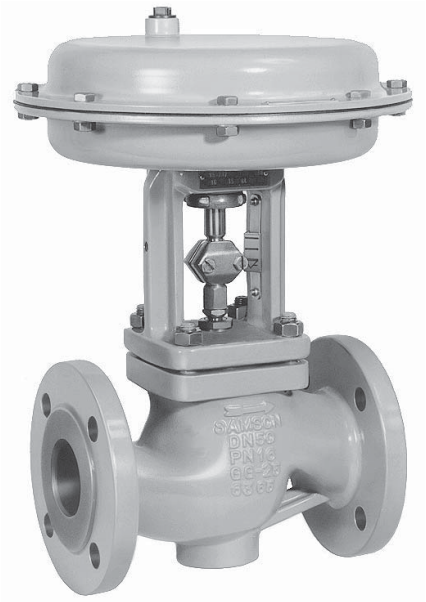

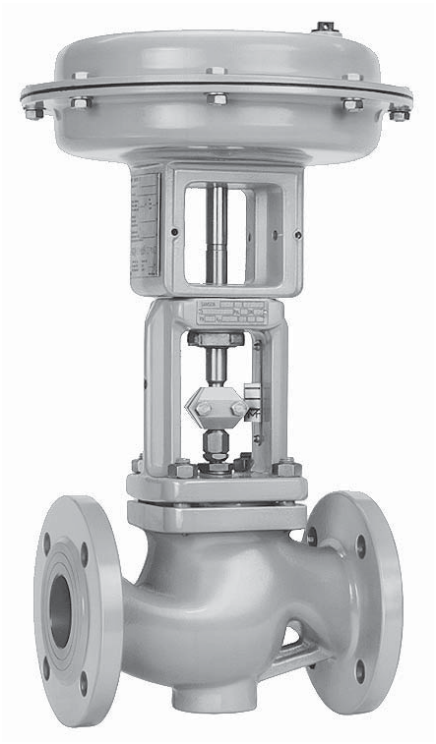

2.21224794-0101.fro

Tetra Pak

Doc No. 1224794-0101

Regulating Valve

3241

This document refers to components specified in Technical Manual, on Maintenance & Spare Parts CD/DVD or on Tetra Pak Intranet.

2.21224794-0101.fro

Version 03 Issue 2016-08

Doc No. 1224794-0101

Tetra Pak

Tetra Pak Processing Systems AB

Maintenance 1
General 1
Valve 1
Actuator 2
Valve 3241 3
Change Packing 3
Replace the Seat and Plug 6
Actuator 3271 / 3277 7
Separating the Valve From the Actuator 8
Assembly and Adjustment 9
Replacing the Diaphragm and Stem Seal 11
Positioner 14
Change Positioner 14
Zero Presetting/Calibration 15
Spare Parts 26
Valve 3241 26
Actuator 3271 29
Actuator 3277 30
Positioner 31
Tools 32

2.21224794-0101.TOC

This page intentionally left blank

Maintenance

General

Valve

The Type 3241 Single-Seated Globe Valve is based on the modular principle and can be combined with pneumatic actuators.

The process medium flows through the valve in the direction indicated by the arrow. The position of the plug is changed by the signal pressure acting on the actuator diaphragm.

The stem connector connects the plug stem with attached plug and actuator stem. A PTFE bushing is used to seal the actuator stem.

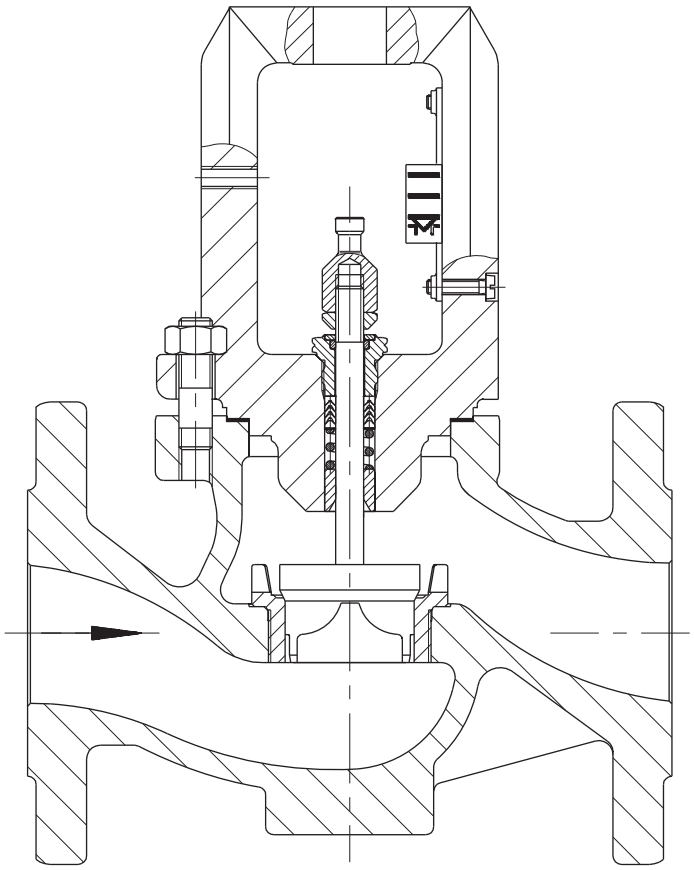

2.2tf506811.en

Actuator

The actuators complement the valves to form pneumatic control valves. The actuators basically consist of two diaphragm cases, a rolling diaphragm and springs.

The signal pressure creates a force which acts on the diaphragm. The springs installed in the diaphragm chamber oppose this force, thus ensuring compensation. When the signal pressure fails, the springs installed either in the top or bottom diaphragm chamber determine the actuator's **fail-safe position**.

Actuator stem extends
NC (Normally Closed) = FA

Upon signal pressure failure, the actuator stem extends and closes the valve (globe valve).

Actuator stem retracts
NO (Normally Open) = FE

Upon signal pressure failure, the actuator stem retracts and opens the valve (globe valve).

Tight-closing function

The pneumatic actuator is either fully vented or fully pressurized whenever the reference variable exceeds or falls below a certain preset value.

The lower and the upper range value of the input signal are adjusted to a fixed value at the zero adjuster and the potentiometer for span, however, they can be corrected after attachment to the valve.

2.2tf506811.en

Valve 3241

The control valve is subject to natural wear, especially at the seat, plug and packing. Depending on the application, the valve needs to be checked regularly to prevent against possible failures. If leakage occurs, this could be caused by a damaged packing.

Change Packing

WARNING!

Risk of injury!
Make sure before dismantling, that the pipeline is drained and free from media. Also, if necessary, allow the control valve to cool down or warm up to ambient temperature prior to starting any work on the valve.

Caution! On performing any work on the valve body, first shut off the supply pressure, disconnect the supply pressure line and remove the actuator. Removing the valve from the pipeline is recommend.

Note! Always separate the actuator and the valve prior to carrying out repairs!

If the valve leaks at the stuffing box, the packing (16) of the stuffing box needs to be exchanged as follows:

(Cont'd)

2.2tf506811.en

(Cont'd)

3271 Actuator

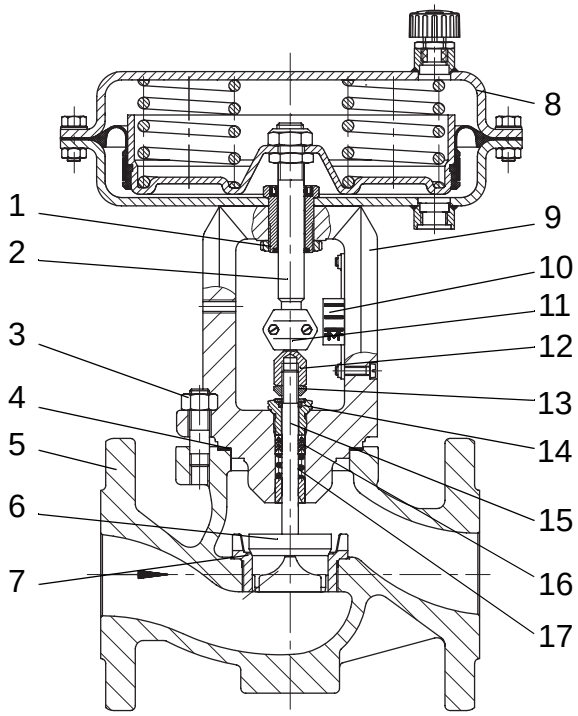

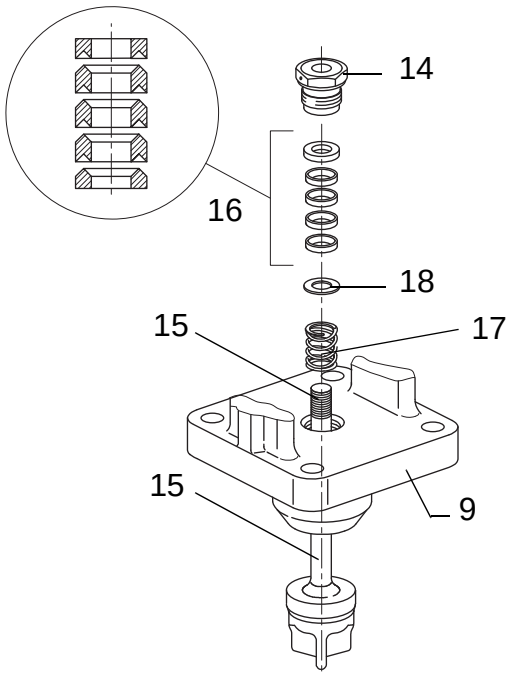

3277 Actuator

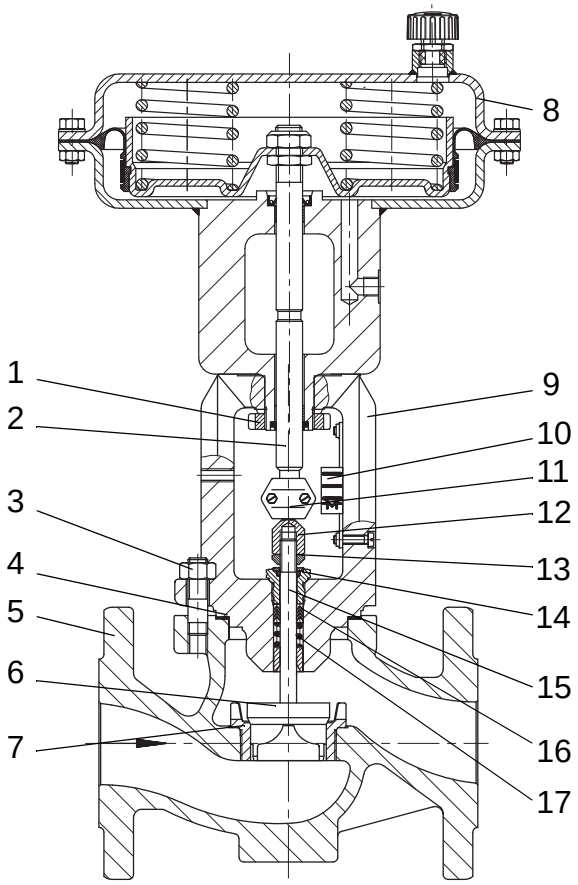

1 Annular nut
2 Actuator stem
3 Nuts
4 Gasket
5 Valve body
6 Plug
7 Seat
8 Actuator
9 Valve bonnet
10 Travel indicator scale
11 Stem connector
12 Stem connector nut
13 Lock nut
14 Threaded bushing
15 Plug stem
16 PTFE ring packing or packing rings
17 Spring
18 Washer

2.2tf506811.en

(Cont'd)

(Cont'd)

a) Remove the actuator as described in chapter **Separating the Valve From the Actuator**.

b) Remove the body nuts (3) as well as the valve bonnet (9) together with the plug stem (15) and plug (6) from the body (5).

c) Unscrew the stem connector nut (12) and lock nut (13) from the plug stem.

d) Screw the threaded bushing (14) out off the stuffing box. Pull the plug stem (15) together with the plug (6) out of the valve bonnet (9).

e) Pull all packing parts out of the packing chamber using a suitable tool. Replace damaged parts. Clean packing chamber thoroughly.

f) Remove the gasket (4) and carefully clean sealing faces in the valve body (5) and on the bonnet (9).

g) Apply lubricant (see chapter **Spare Parts**, section **Tools**) to all the packing parts and the plug stem (15).

h) Slide the plug stem (15) with plug (6) into the valve bonnet (9).

i) Insert new flat gasket (4) into the body (5). Carefully place the valve bonnet (9) onto the valve body (5) and secure with nuts (3).

j) Carefully slide the stuffing box parts (17, 18 and 16) over the plug stem (15) into the packing chamber. Make sure to keep the proxpper order. Screw in the threaded bushing (14) and tighten.

k) Loosely screw the lock nut (13) and stem connector nut (12) onto the plug stem (15).

l) Mount actuator and adjust upper and lower bench range values as described in chapter **Assembly and Adjustment.**

2.2tf506811.en

Seat thread (mm)	Tightening torque (Nm)	Bonnet nut (3) thread (mm)	Tightening torque (Nm)
M32x1.5	170	4xM10	10
M58x1.5	500	4xM12	30
M90x1.5	1050	4xM16	60
M110x1.5	1550	4xM20	100
M125x1.5	1900	8xM16	60
M152x1.5	2600	8xM20	100

Replace the Seat and Plug

WARNING!

Risk of injury!
Remove the valve from the pipeline before disassembling.

Note! Always separate the actuator and the valve prior to carrying out repairs!

We recommend you to also replace the packing (16) when exchanging the seat and plug.To exchange the packing, proceed as described in **Change Packing**.

Plug:

Remove the old plug and replace it with a new plug with plug stem. It is possible to use the old plug again, provided it has been reworked properly. Apply lubricant (see chapter **Spare Parts**, section **Tools**) to the plug stem before installation.

Reworking the Plug

Slight damage at the sealing edges of the plug can be eliminated by re-turning it on a lathe. Soft-sealing plugs can only be reworked until dimension x is reached, and if the seat bore exceeds 12 mm. For seat bores of 63 mm and larger, the entire sealing ring can be exchanged, if necessary (the plug parts are screwed together).

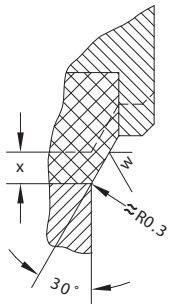

2.2tf506811.en

Seat bore	x [mm]
12	0.5
24...48	1.0
6...80	2.0
100...200	2.5

Seat:

Unscrew the seat (7) using the appropriate seat tool (see chapter **Spare Parts**, section **Tools**). Apply lubricant (see chapter **Spare Parts**, section **Tools**) to the thread and sealing cone of the new seat (or possibly the old seat when it has been reworked or thoroughly cleaned) and screw it in.

Actuator 3271 / 3277

Note! The pneumatic actuators are designed for a maximum supply pressure of 6 bar. To prevent the actuator from being damaged, do not let the supply pressure exceed the upper spring range value by more than 3 bar when the actuator is used for flow-switching service (on-off valve) with the fail-safe position **"Actuator stem retracts" (NO)**. Label actuators that have a reduced supply pressure with a sticker "max. supply pressure limited to … bar".

3271 Actuator

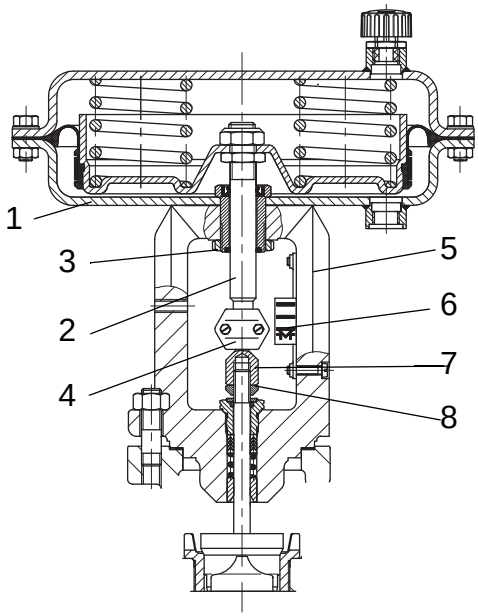

3277 Actuator

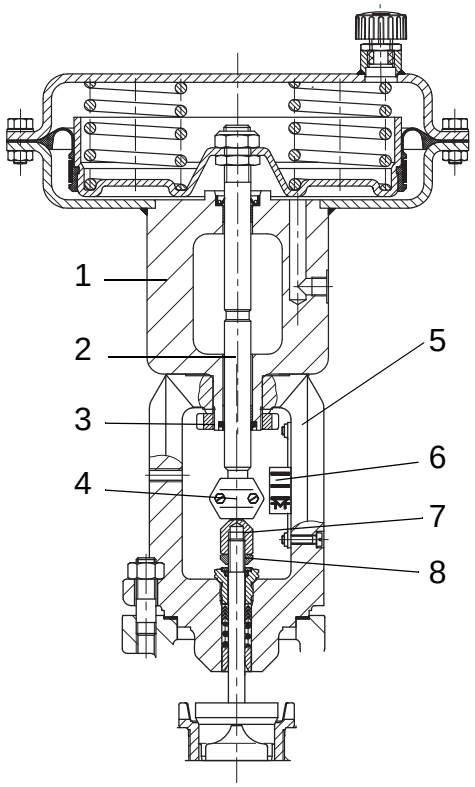

1 Actuator
2 Actuator stem
3 Annular nut
4 Stem connector
5 Valve bonnet
6 Align travel indicator scale
7 Stem connector nut
8 Lock nut

2.2tf506811.en

Separating the Valve From the Actuator

Note! When disassembling actuators with fail-safe action **"Actuator stem extends" (NC)** and particularly versions with pretensioned springs, **apply a pressure slightly higher than the lower bench range value (see actuator nameplate) to the bottom signal pressure connection before unscrewing the annular nut (3)**.

Caution! Actuators with springs that have already been pretensioned by the manufacturer without attachment to a valve are marked by an appropriate label. In addition, such actuators can be identified by three bolts and nuts protruding from the bottom diaphragm case. These bolts and nuts allow you to evenly relieve the compression when disassembling the actuator.

a) Remove stem connector (4) and unscrew annular nut (3). To remove the annular nut (3), apply a pressure slightly higher than the lower bench range value (see actuator nameplate) before disassembling actuators with fail-safe action **"Actuator stem extends" (NC)** and particularly actuator versions with pretensioned springs.

b) Lift actuator (1) from the valve bonnet (5).

2.2tf506811.en

Assembly and Adjustment

If the valve and actuator have not been preassembled by the manufacturer, or the if original actuator is replaced by a different actuator size or model, proceeds as follows to assemble the valve and actuator:

a) Loosen lock nut (8) and stem connector nut (7) from the valve. Firmly press the plug with the plug stem into the seat ring. Turn stem connector nut and lock nut downward.

b) Remove clamps of the stem connector (4) and annular nut (3) from the actuator (1). Push the annular nut over the plug stem.

c) Place the actuator on the valve bonnet (5) and screw tight with the annular nut (3).

d) Read bench range (or range with pretensioned springs) and fail-safe action from the nameplate of the actuator (e.g. 0.2 to 1 bar and "Actuator stem extends").

Note! The operating mode (fail-safe action) **"Actuator stem extends" (NC)** or **"Actuator stem retracts" (NO)** is indicated on the nameplate by **FA** or **FE** respectively on the Type 3271 actuator and by the appropriate symbol on the Type 3277 actuator.

The lower bench range value (0.2 bar) corresponds to the lower signal pressure range to be adjusted; the upper bench range value (1 bar) corresponds to the upper signal pressure range.

2.2tf506811.en

In actuator version **"Actuator stem extends" (NC)**, apply a pressure corresponding to the lower bench range value (e.g. 0.2 bar) to the signal pressure connection on the bottom diaphragm case. In actuator version **"Actuator stem retracts" (NO)**, apply a pressure corresponding to the upper bench range value (e.g.1 bar) to the connection on the top diaphragm case.

e) Turn the stem connector nut (7) by hand until it touches the actuator stem (2). Turn it another quarter turn and secure position with the lock nut (8).

f) Position clamps of the stem connector (6) and fasten. Align travel indicator scale (4) with tip of the stem connector; for actuators with "Actuator stem extends" align it with lower marking (valve closed) and for actuators with "Actuator stem retracts" align it with top marking (valve open).

Note! **Always** re-calibrate the zero point when the actuator and the valve have been separated, see chapter **Zero Presetting/Calibration**.

(Cont'd)

(Cont'd)

Adjustments

Option to pretension the springs for actuator version "Actuator stem extends".

To achieve a greater thrust, the springs of actuators (350 and 700 cm^2) can be pretensioned by up to 25 % of their travel or their bench range.

Example: If, with a bench range of 0.2 to 1 bar, the springs are to be pretensioned by 0.1 bar, for example, the bench range is shifted by 0.1 bar, resulting in a new bench range of 0.3 to 1.1 bar (0.1 bar corresponds to a compression of 12.5 %). When adjusting the valve, a signal pressure of 0.3 bar is to be set as the lower signal pressure range. The new bench range of 0.3 to 1.1 bar must be marked on the nameplate as bench range with pretensioned springs.

Valve and actuator that have different rated travels.

Note! Valves that have a smaller travel than that of the actuator must always use pretensioned springs.

Caution! Actuators with springs that have already been pretensioned by the manufacturer without attachment to a valve are marked by an appropriate label. In addition, such actuators can be identified by three bolts and nuts protruding from the bottom diaphragm case.

2.2tf506811.en

Replacing the Diaphragm and Stem Seal

Remove the actuator as described in chapter **Separating the Valve From the Actuator**.

Caution! To disassemble an actuator with pre-loaded actuator springs (recognizable by the long bolts on the diaphragm chambers), always undo the short bolts first and then unthread the long bolts slowly and evenly until the actuator springs are fully decompressed.

Note! Actuators with 700 cm² (travel = 30 mm) that are mounted to valves with 15 mm travel, are pre-loaded by approx. 75 % on mounting them to the valve.The signal pressure range is recorded on the nameplate when the actuators have been pre-loaded on mounting them to the valve.

3271 Actuator

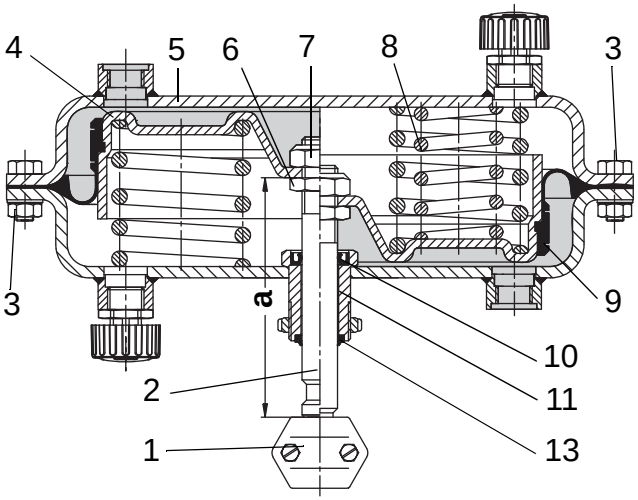

2.2tf506811.en

"Actuator stem retracts" / "Actuator stem extends"

Dimension **a**
See **Caution!** on next page.

240 cm² = 98,25 mm

3277 Actuator

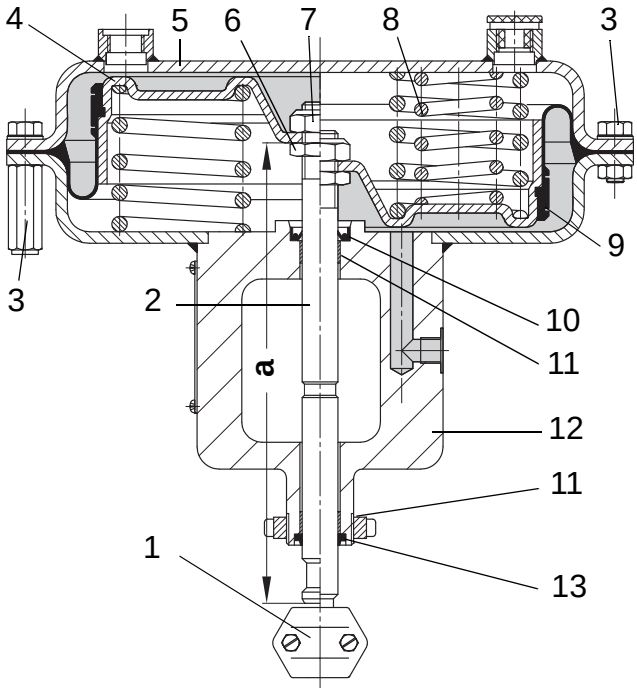

"Actuator stem retracts" / "Actuator stem extends"

Dimension **a**
See **Caution!** on next page.

120 cm² (15 mm travel) = 188,5 mm
120 cm² (20 mm travel) = 185,5 mm
350 cm² = 209 mm
700 cm² = 246 mm

1 Stem connector
2 Actuator stem
3 Nuts and bolts
4 Diaphragm plate
5 Top diaphragm case
6 Nut
7 Nut
8 Springs
9 Diaphragm
10 Stem seal
11 Dry bearing
12 Yoke with bottom diaphragm case
13 Wiper

Diaphragm

a) Unthread nuts and remove the bolts (3) from the diaphragm cases.

WARNING!

Risk of injury!
Loosen the short bolts first, **then slowly and in a criss-cross pattern the long bolts and nuts until the actuator springs are relieved of tension**.

b) Lift off the top diaphragm case (5) and remove the springs (8) (NC-version).

c) Pull the actuator stem (2) with diaphragm plate (4) and diaphragm (9) out of the yoke (12).

d) Unscrew nut (7), while holding the nut (6) stationary or clamping the actuator stem with a suitable tool.

Caution! Proceed carefully to avoid damaging the seals of the actuator stem.

Caution! Do not loosen the nut (6) on the actuator stem. It is painted over to protect it. If, however, it has been loosened, it is essential that the dimension **a** measured from the **top of the nut** to the **bottom of the actuator stem** is kept.

e) Remove the hose clamp and pull it together with the diaphragm (9) off the diaphragm plate (4).

f) Stretch the new diaphragm onto the diaphragm plate. Fit the hose clamp evenly into the groove intended for it and tighten.

g) Apply lubricant (see chapter **Spare Parts**, section **Tools**) to the sealing places on the actuator stem.

h) Insert the springs (8) and slide the yoke with bottom diaphragm case over the actuator stem.

i) Screw tight the nuts and bolts (3) of the diaphragm cases.

2.2tf506811.en

Stem Seal

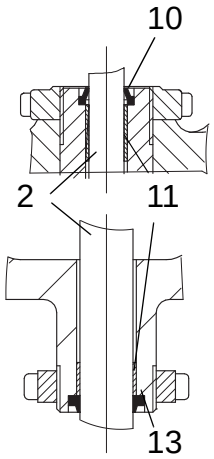

2 Actuator stem
10 Stem seal
11 Dry bearing
13 Wiper

a) Unthread nuts and remove the bolts (3) from the diaphragm cases.

b) Lift off the top diaphragm case (5) and remove the springs (8).

c) Pull the actuator stem (2) with diaphragm plate (4) and diaphragm (9) out of the yoke (12).

d) Coat the new stem seal (10) with lubricant (see chapter **Spare Parts**, section **Tools**) and insert it.

e) If necessary, replace the dry bearing (11) and wiper (13) with new ones as well.

f) Insert the springs (8) and slide the yoke with bottom diaphragm case over the actuator stem.

g) Screw tight the nuts and bolts of the diaphragm cases (3).

2.2tf506811.en

Positioner

Change Positioner

WARNING! **Risk of injury!**
Make sure before dismantling, that the pipeline is drained and free from media. Also, if necessary, allow the control valve to cool down or warm up to ambient temperature prior to starting any work on the valve.

WARNING! **Risk of injury!**
Shut off the electrical supply and depressurize the positioner before dismantling.

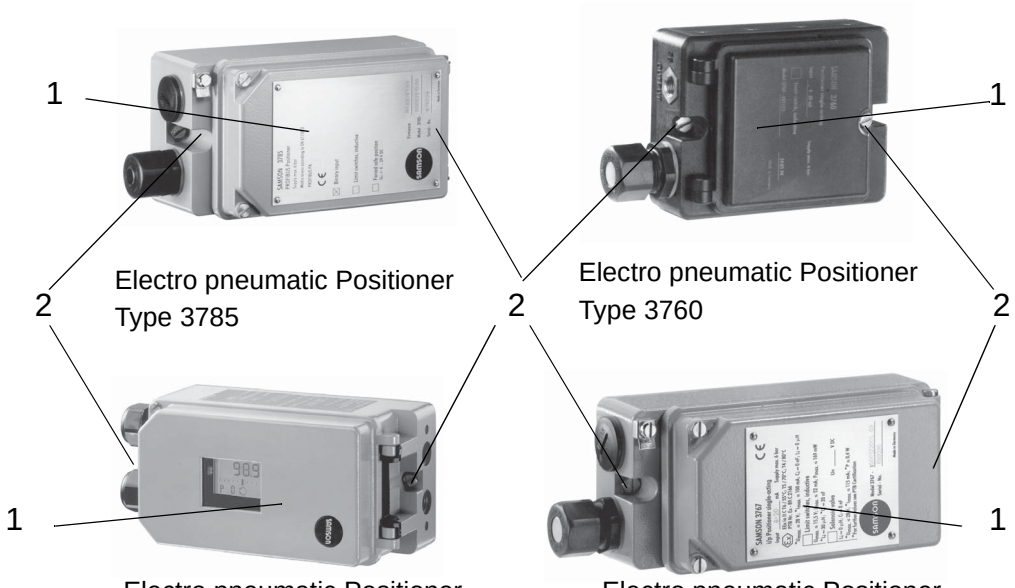

1 Positioner hatch
2 Mounting screws

2.2tf506811.en

a) Open the positioner hatch (1) and mark the electrical supply cables inside.

b) Dismantle the electrical- and pneumatic connection.

Note! Remember to unhook the **Range Spring** from the **lever** at the back of the positioner **type 3760** before continuing the disassembly
See picture in the 3760 chapter below.

c) Unscrew the mounting screws (2) and remove and change the positioner.

d) Assemble in reverse order.

Zero Presetting/Calibration

In case of inconsistencies in the closing position of the valve, e.g. with soft-sealed plugs, it may necessary to re-calibrate the zero point.

Note! **Always** re-calibrate the zero point when the positioner and the valve have been separated.

3730-1

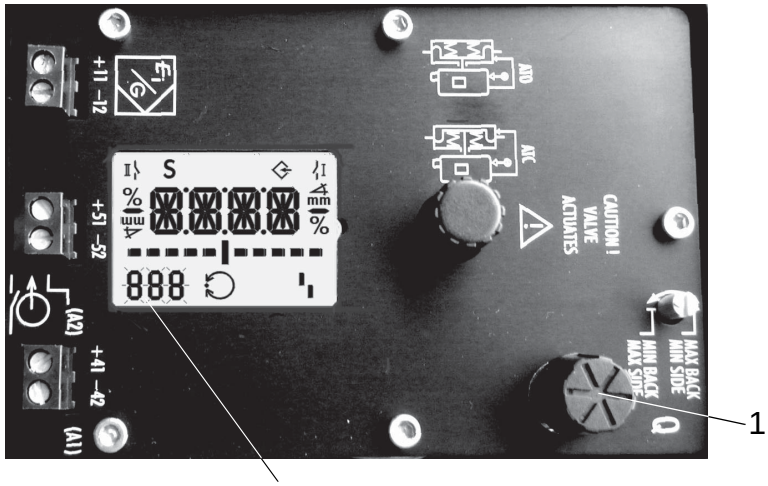

1 Rotary push button
2 Parameter/error code

Start the zero calibration by activating Code P16 as follows:

a) Turn rotary push button (1) until Code **P16** appears (2).

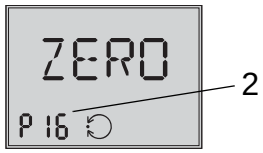

b) Press rotary push button (1) 6 seconds long, 6-5-4-3-2-1 is counted down on the display.

c) Zero calibration has started, the display blinks!

d) The positioner moves the control valve to the CLOSED position and re-calibrates the internal electric zero point.

e) When the zero calibration has been successfully completed, the positioner returns to closed loop operation (status indication).

Cancelling zero calibration

The zero calibration can be cancelled by pressing rotary push button (1). The positioner then moves to the fail-safe position (indicated by S on the display).

A new zero calibration can be started directly afterwards.

2.2tf506811.en

3730-2, 3730-3

Note! The valve briefly moves from the current travel/angle of rotation position to the closed position.

Note! The positioner must be connected to the supply air to perform the zero calibration.

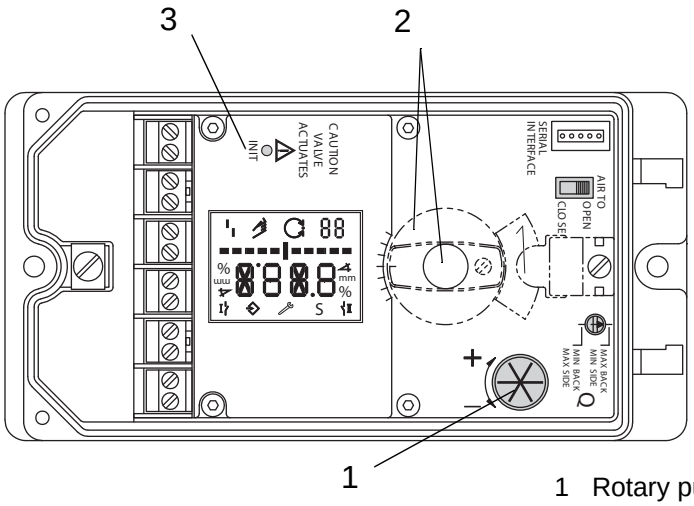

1 Rotary push button
2 Cap or rotary switch
3 Initialization key

2.2tf506811.en

Enable configuration:

a) Turn rotary push button (1) → Code 3, display: No
b) Press rotary push button (1), Code 3 blinks
c) Turn rotary push button (1) → YES
d) Press rotary push button (1) → Display (4)

(Cont'd)

(Cont'd)

Perform zero calibration:

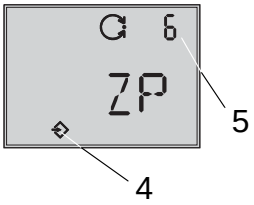

4 Configuration enabled
5 Code

e) Turn push button (1) → Code 6
f) Press push button (1), Code 6 blinks
g) Turn push button (1) → ZP
h) Press push button (1)
i) Press INIT key (3)!

Zero calibration is started, the positioner moves the control valve to the CLOSED position and readjusts the internal electrical zero point.

2.2tf506811.en

3730-4, 3730-5

Note! The valve briefly moves from the current travel/angle of rotation position to the closed position.

Note! The positioner must be connected to the supply air to perform the zero calibration.

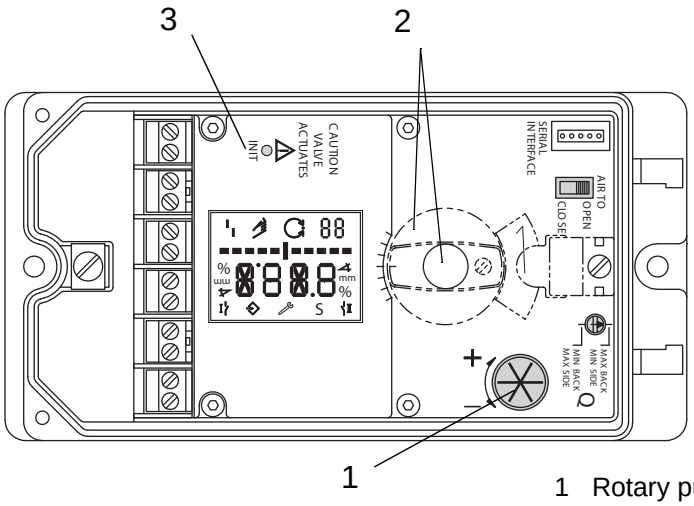

1 Rotary push button
2 Cap or rotary switch
3 Initialization key

2.2tf506811.en

Enable configuration:

a) Turn rotary push button (1) → Code **3**
b) Press rotary push button (1)
c) Turn rotary push button (1) → **ON**
d) Press rotary push button (1) → Display (4)

(Cont'd)

(Cont'd)

Perform zero calibration:

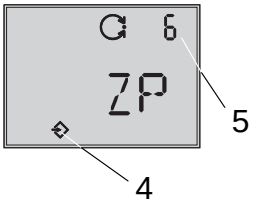

4 Configuration enabled
5 Code

e) Turn push button (1) → Code 6
f) Press push button (1), Code 6 blinks
g) Turn push button (1) → ZP
h) Press push button (1)
i) Press INIT key (3)!

Zero calibration is started, the positioner moves the control valve to the CLOSED position and readjusts the internal electrical zero point.

2.2tf506811.en

3760

Adjustment for "Actuator Stem Extends'' (NC)

Note! To ensure that the entire closing force can be effective in the control valve, the diaphragm chamber must be completely vented when reaching the lower (operating direction >>) and the upper (operating direction <>) range value of he reference variable.

Therefore, set input signal to a slightly increased starting point of approx. 0.23 bar (4.5 mA) when the operating direction is direct >>, and to a slightly lowered starting point of 0.97 bar (19.5 mA) when the operating direction is reverse <>. This applies in particular to controllers and control systems whose output signal is limited to a range of 4 to 20 mA.

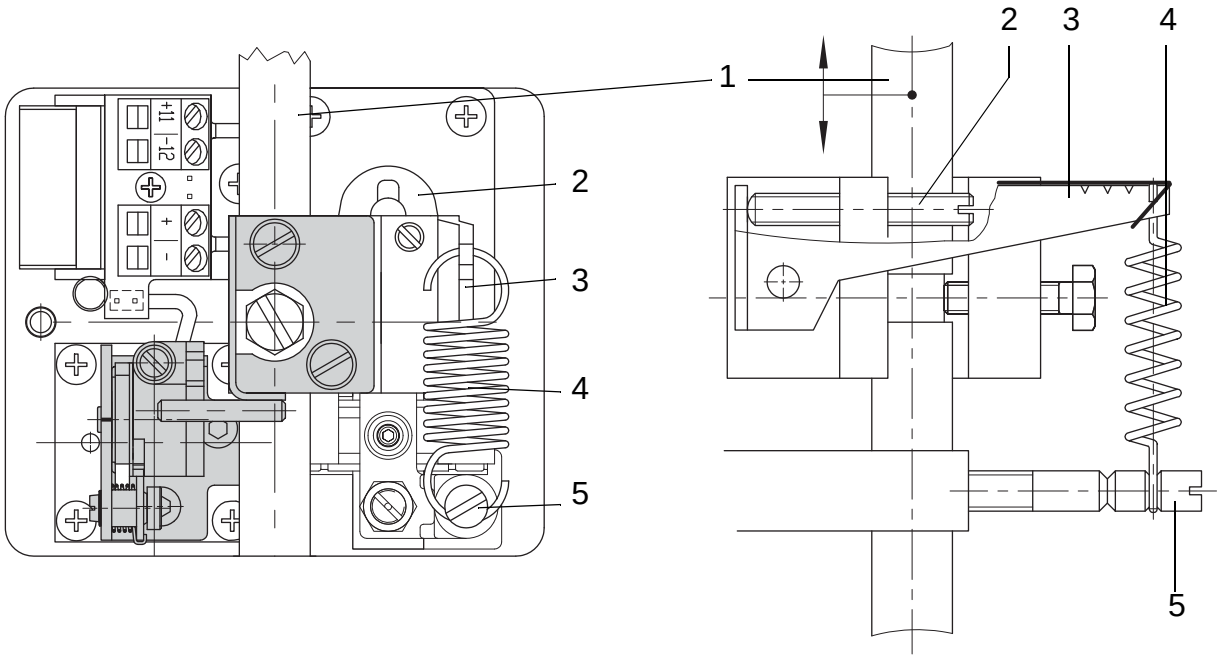

1 Travel
2 Adjustment screw zero
3 Lever
4 Range spring
5 Adjustment screw span

Stating Point (Zero)

e.g. 0.23 bar (4.5 mA)

a) Turn ZERO adjustment screw (2) until the plug stem just begins to move from its resting position (observe plug stem via travel indicator).

b) Decrease input signal and increase again slowly. Check whether the plug stem starts moving at a starting point of 0.23 bar (4.5 mA) and correct it, if necessary.

Upper Range Value (Travel)

e.g. 1 bar (20 mA)

c) After the starting point has been adjusted, increase input signal. The plug stem must stand still at an upper range value of exactly 1 bar (20 mA). It must have passed through 100 % travel (observe the travel indicator on the valve!). If the upper range value does not correlate, correct it via SPAN adjustment screw (5). Turning the screw towards the fulcrum of the lever increases the travel, whereas turning it away reduces the travel.

Note! Make sure that the range spring (4) is vertical for adjustment. If necessary, hook he spring at another point on the lever (3).

Caution! If you change the span, the zero point must be readjusted as well.

d) Check upper range value again. Readjust both values until they are correct.

2.2tf506811.en

Adjustment for "Actuator Stem Retracts" (NO)

Note! For actuator version "Actuator stem retracts", the diaphragm chamber must be loaded with a pressure that is sufficient to tightly close the valve, even when upstream pressure of the plant prevails. The upper range value of the reference variable must be 1 bar or 20 mA (direct operating direction >>) and the lower input range value must be 0.2 bar or 4 mA (reverse operating direction <>).

Starting Point (zero) e.g. 1 bar (20 mA)

a) Adjust input signal to 1 bar (20 mA) using the remote adjuster (ammeter).

b) Turn ZERO adjustment screw (2) until the plug stem just begins to move from its initial position.

c) Increase input signal and slowly reduce it to 1 bar (20 mA). Check if the valve begins to move at exactly 1 bar (20 mA).

d) Correct any deviations using the ZERO adjustment screw (2). Upper range value (travel) e.g. 0.2 bar (4 mA).

e) After the starting point has been adjusted, set the input signal to 0.2 bar (4 mA) via remote adjuster (ammeter). The plug stem must stand still at an upper range value of exactly 0.2 bar (4 mA). It must have passed through 100 % travel (observe the travel indicator on the valve!).

f) If the upper range value does not correlate, correct it using the SPAN adjustment screw (5). Turning the screw towards the fulcrum of the lever increases the travel, whereas turning it away reduces the travel.

Caution! If you change the span, the zero point must be readjusted as well.

g) Check upper range value again. Readjust both values until they are correct.

h) When correction has been completed, adjust input signal to 1 bar (20 mA) again.

i) Turn ZERO adjustment screw (2) again until the required signal pressure is indicated on a pressure gauge installed in the signal pressure line. If no pressure gauge is available, adjust the starting point to 0.97 bar (19.5 mA).

Note! After adjusting the positioner, close the actuator yoke with the cover plate. Make sure that the vent plug in the cover plate is directed downwards when the control valve is installed in the plant to prevent condensed water from collecting in the positioner.

2.2tf506811.en

3767

Adjusting the Position Transmitter

Note! The starting point (zero) and upper range value (span) must be set before calibrating the position transmitter.

Depending on the position of the 4-pin plug (symbol on plug: >> or <>), the feedback signal can be set to either a range of 4 to 20 mA or 20 to 4 mA for 0 to 100 % travel.

Zero point (ZERO)

Use the switches 1 and 2 to preset the zero point and the ZERO potentiometer for fine-tuning. The adjusted value always refers to 4 mA.

Span (SPAN)

Use the switches 3 and 4 to preset the span, i.e. the upper range value, and the SPAN potentiometer for fine-tuning. The adjusted value always refers to 20 mA.

Example:

Move the valve to open position while observing the position transmitter signal. If the signal does not move in the desired direction, switch over the multi-pin plug. Adjust the zero point (4 mA) and span (20 mA) for the valve positions according to table below.

2.2tf506811.en

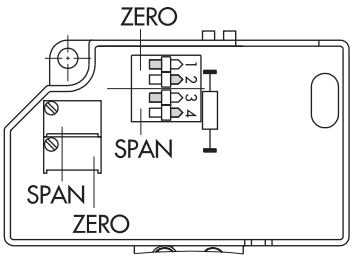

Position transmitter			
Valve movement	Observed transmitter signal	Direction of signal	Adjust zero/span to
OPEN ↑ CLOSED	Current increases ↑	OK	20 mA Valve OPEN 4 mA Valve CLOSED
		Not OK →Reconnect plug	4 mA Valve OPEN 20 mA Valve CLOSED
	Current decreases ↓	OK	4 mA Valve OPEN 20 mA Valve CLOSED
		Not OK →Reconnect plug	20 mA Valve OPEN 4 mA Valve CLOSED

Adjusting the Zero Point

a) Use the input signal of the positioner to move the valve to closed position (valve CLOSED – travel 0 %).

b) The ammeter must now indicate approx. 4 mA.

c) Correct smaller deviations on the ZERO potentiometer until the meter shows exactly 4 mA. If deviations are too high and cannot be corrected using the potentiometer (adjustment range of approx.20 turns), set the switches 1 and 2 to indicate an mA value which is within the adjustment range of the ZERO potentiometer.

d) Set the zero point to exactly 4 mA using the ZERO potentiometer.

2.2tf506811.en

Adjusting the Span

a) Use the input signal of the positioner to move the valve to open position (valve OPEN – travel 100 %).

b) The ammeter must now indicate approx.20 mA.

c) Correct smaller deviations on the SPAN potentiometer until the meter shows exactly 20 mA. If deviations are too high, set the switches 3 and 4 to indicate an mA value which is within the adjustment range of the SPAN potentiometer.

d) Turn the SPAN potentiometer until the meter shows exactly 20 mA. Since zero and span have a mutual influence on each other, repeat the correction procedure at both potentiometers until both values are correct.

3785

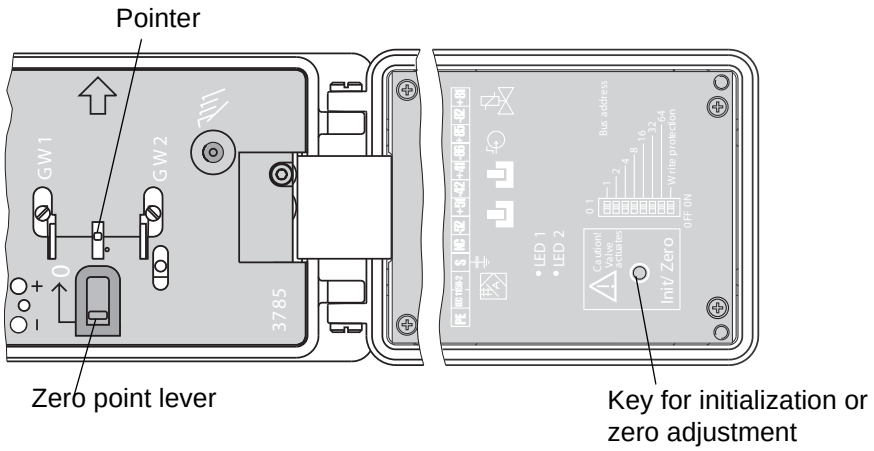

Adjusting mechanical zero

Note! Zero must be adjusted with the valve closed (for three-way valves with the actuator stem extended).

a) Firmly push the zero point lever, which is located on the cover plate of the positioner, once in the direction indicated by the arrow as far as it will go. The yellow pointer will then be on the white marking.

For control valves with starting position OPEN, e.g. an actuator with fail-safe action "Actuator stem retracts", feed supply air to the positioner first. As soon as the manual operation function is activated, the signal pressure builds up and the valve moves to closed position. Subsequently, the zero point lever can be operated.

Electric zero calibration

If mechanical zero has shifted during the valve's operation, an electric zero calibration can be carried out. To do so, press the Init/Zero key located on the inside of the lid.

Caution! The control valve moves to its end position.

a) Firmly push the zero point lever, which is located on the cover plate of the positioner, once in the direction indicated by the arrow as far as it will go. The yellow pointer will then be on the white marking.

b) Press key again to start electric calibration.

After the key has been pressed for the second time, it is locked for approximately one minute. Electric calibration is completed when the positioner moves to the position predetermined by the reference variable.

2.2ff506811.en

Spare Parts

Valve 3241

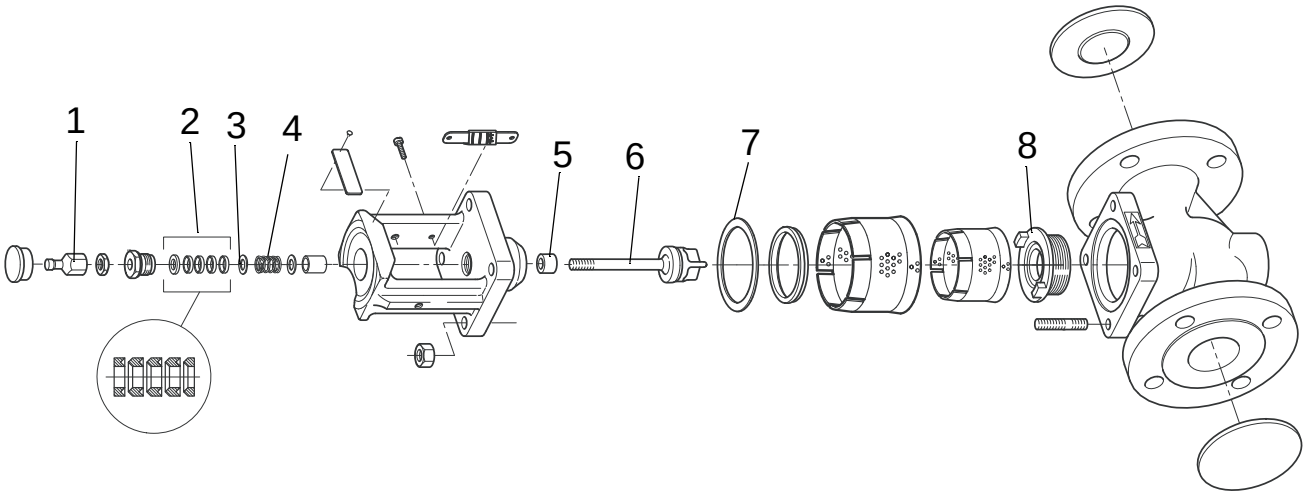

2.2tf506812.en

Description Spare part kit, valve	Spare part article No.	Included parts	Pos.	Qty.
DN 15, Kvs 1	90503-8273	Nut Sealing box V-ring Washer sealing box Spring sealing box Cone Seal Seat	1 2 3 4 6 7 8	1 1 1 1 1 1 1
DN 15, Kvs 1.6	90503-8274			
DN 15, Kvs 2.5	90503-8275			
DN 15, Kvs 4 SS/SS NC	6-990425-05	Nut Sealing box V-ring Washer sealing box Spring sealing box Bushing Cone Seal Seat	1 2 3 4 5 6 7 8	1 1 1 1 1 1 1 1
DN 20, Kvs 1 SS/SS NC	6-990425-41			
DN 20, Kvs 2.5 SS/SS NO	6-990425-42			
DN 20, Kvs 4 SS/SS NC	6-990417-76			
DN 20, Kvs 6.3 PN 40 SS/SS NC	6-990425-06			

Description Spare part kit, valve	Spare part article No.	Included parts	Pos.	Qty.
DN 25, Kvs 6.3 SS/SS NC	6-990417-77	Nut Sealing box V-ring Washer sealing box Spring sealing box Bushing Cone Seal Seat	1 2 3 4 5 6 7 8	1 1 1 1 1 1 1 1
DN 25, Kvs 10 SS/SS NC	6-990417-78			
DN 32, Kvs 4 SS/SS NC	6-990417-79			
DN 32, Kvs 6.3 SS/SS NC	6-990417-80			
DN 32, Kvs 10 SS/SS NC	6-990417-81			
DN 32, Kvs 16 SS/SS NC DN 32, Kvs 32 SS/SS NC	6-990417-82			
DN 40, Kvs 16 SS/SS NC	6-990417-83			
DN 40, Kvs 25% SS/SS (To valve with PN40)	6-990425-07			
DN 40, Kvs 25 SS/SS (To valve with PN16) **NO** Nut (1) **NO** Bushing (5)	90503-4567			
DN 50, Kvs 22 SS/SS DN 50, Kvs 35 SS/SS NC	6-990425-08			
DN 50, Kvs 40% SS	90512-7884			
DN 65, Kvs 40 SS/ lin	90512-7885			
DN 65, Kvs 35 SS/SS NC	6-990425-09			
DN 65, Kvs 50 SS/SS NC	6-990425-38			
DN 65, Kvs 60 SS/SS NC	6-990425-10			
DN 65, Kvs 60 SS/PTFE ANSI 2 1/2", Kvs 60 SS/PTFE	6-990417-64			
DN 65, Kvs 60 SS/SS NC DN 65, Kvs 63 SS/SS NC ANSI 2 1/2", Kvs 60 SS/SS	6-990417-70			
DN65/80 Kvs 20 SS STIII	90523-2244			

2.2tf506812.en

Description Spare part kit, valve	Spare part article No.	Included parts	Pos.	Qty.
DN80, Kvs 48 SS STII9	90523-1542	Nut Sealing box V-ring Washer sealing box Spring sealing box Bushing Cone Seal Seat	1 2 3 4 5 6 7 8	1 1 1 1 1 1 1 1
DN 80, Kvs 80 SS/SS NC, air red ANSI 3" Cv 93,6 SS/SS	6-990417-71			
DN 80, Kvs 80 SS/SS NC, lin	6-990425-11			
DN 80, Kvs 80 SS/PTFE NC ANSI 3", Cv 93,6 SS/PTFE	6-990417-65			
DN 100, Kvs 100 SS/SS NC	6-990425-12			
DN100, Kvs 80 SS STII9	0523-1543			
DN 100, Kvs 125 SS/SS NC	6-990425-39			
DN 100, Kvs 160 SS/SS NC ANSI 4", Cv 187,2 SS/SS	6-990417-72			
DN 100, Kvs 160 SS/PTFE NC ANSI 4", Cv 187,2 SS/PTFE	6-990417-66			
DN 100, Kvs 160 SS/SS NC, lin	6-990425-13			
DN 125, Kvs 200 SS/SS NC, lin	6-990425-14			
DN 125, Kvs 200 SS/SS NC, air red	6-990425-15			
DN150, Kvs 120 SS STII9	0523-1544			

2.2tf506812.en

Actuator 3271

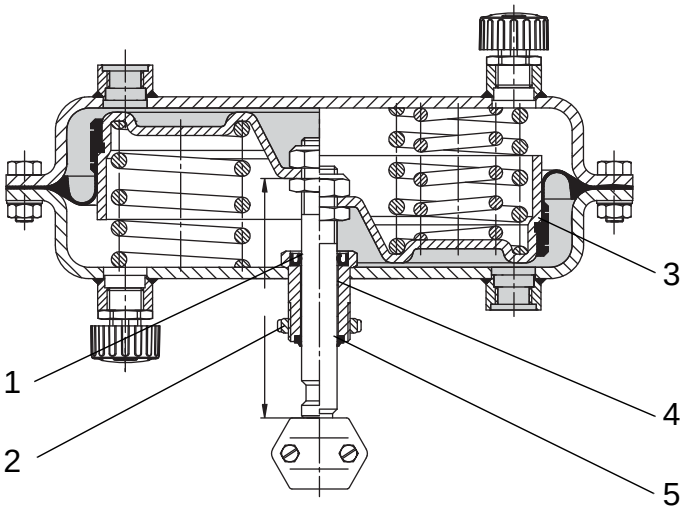

Description Spare part kit, actuator 3271	Spare part article No.	Included parts	Pos.	Qty.
240 cm^2	6-990417-75	Seal Lock nut Diaphragm Bushing Stripper	1 2 3 4 5	1 1 1 2 1

2.2tf506812.en

Actuator 3277

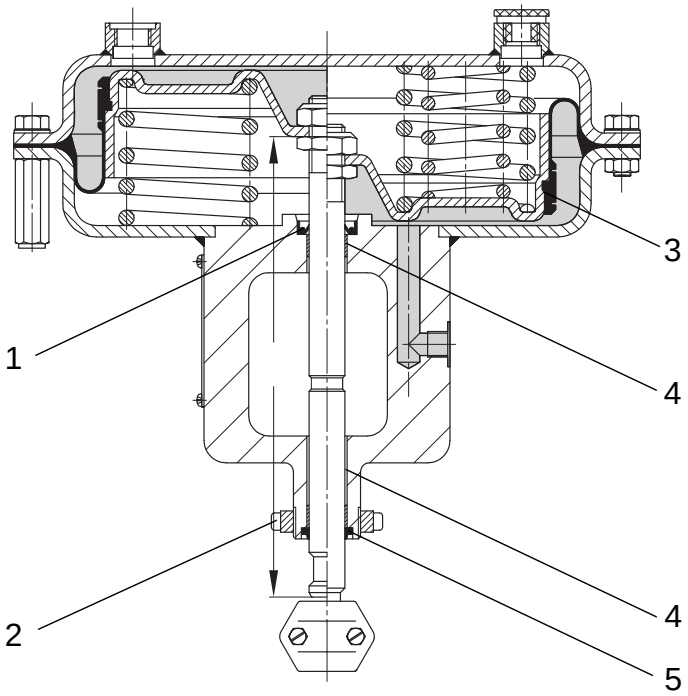

Description Spare part kit, actuator 3277	Spare part article No.	Included parts	Pos.	Qty.
120 cm^2	90519-3708	Seal Lock nut Diaphragm Stripper	1 2 3 5	1 1 1 1
240 cm^2	90519-3709	Seal Lock nut Diaphragm Bushing Stripper	1 2 3 4 5	1 1 1 2 1
350 cm^2	90519-3710			
700cm^2	90519-3711			

2.2tf506812.en

Positioner



Description Positioner, complete unit	Spare part article No.	Included parts	Pos.	Qty.
3725 w	90523-1319	-	-	1
3730-1	90510-4762	-	-	1
3730-2	90503-4689	-	-	1
3730-3	90510-4763	-	-	1
3730-4	90510-4764	-	-	1
3730-5	90510-4765	-	-	1
Siemens Sipart PS2 6DR 5010	6-990407-06	-	-	1
Mounting kit 3730 to actuator 3277, 120 cm^2 NC/NO	90510-4441	-	-	1
Mounting kit 3730 to actuator 3277, 240-700 cm^2 NC	90512-1665	-	-	1
Mounting kit 3730 to actuator 3277, 240 cm^2 NO	90512-1666	-	-	1
Mounting kit 3730 to actuator 3277, 350 cm^2 NO	90512-1667	-	-	1
Mounting kit 3730 to actuator 3277, 700 cm^2 NO	90512-1668	-	-	1

Note! At exchange of positioner 3760 and 3767; Choose 3730-1 together with mounting kit that correspond with actuator size and function.

At exchange of positioner 3785; Choose 3730-4 together with mounting kit that correspond with actuator size and function.

2.2tf506812.en

Tools

Seat tool

Description Seat tool, complete	Spare part article No.	Included parts	Pos.	Qty.
DN 15-25	90512-6974	Socket	-	1
DN 32-50	90512-6975	Supporting flange Socket	-	1 1
DN 65-80	90512-6976	Supporting flange Socket Extension	-	1 1 1
DN 100	90512-6977	Supporting flange Socket Extension	-	1 1 1

Torque wrench

Description Torque wrench	Spare part article No.	Included parts	Pos.	Qty.
10 - 100 Nm	90512-6983	-	-	1
50 - 300 Nm	90510-4303	-	-	1
Torque multiplyer, IP30, 3000 Nm	90510-4302	-	-	1

2.2tf506812.en

Lubrication

Description Lubrication	Spare part article No.	Included parts	Pos.	Qty.
Greese	90512-7283	-	-	1

This page intentionally left blank

2.2tf506812.en

Tetra Pak

Maintenance & Spare Parts

Regulating Valve

(Samson)

3244



2.21224795-0101.fro

Tetra Pak

Doc No. 1224795-0101

Regulating Valve

3244

This document refers to components specified in Technical Manual, on Maintenance & Spare Parts CD/DVD or on Tetra Pak Intranet.

2.21224795-0101.fro

Version 02 Issue 2012-11

Doc No. 1224795-0101

Tetra Pak

Tetra Pak Processing Systems AB

Maintenance 1
General 1
Valve 1
Actuator 2
Valve 3244 3
Change Packing 3
Replace the Seat and Plug 6
Actuator 3277 9
Separating the Valve From the Actuator 10
Assembly and Adjustment 11
Replacing the Diaphragm and Stem Seal 13
Positioner 16
Change Positioner 16
Zero Presetting/Calibration 17
Spare Parts 27
Mixing valve 3244 27
Diverting valve 3244 28
Actuator 3277 30
Positioner 31
Tools 32

1.0 1224795-0101.TOC

This page intentionally left blank

Maintenance

General

Valve

The Type 3244 Three-way Valve is based on the modular principle and can be combined with pneumatic actuators.

The three-way valves operate either as mixing or diverting valve depending on the plug arrangement (in DN 15 to 25, the plugs are identical).

In mixing valves, the media to be mixed enter at ports A and B and the united flow leaves at port AB.

In diverting valves, the medium enters at port AB and the divided flows leave at ports A and B.

The flow across A or B to AB and vice versa is determined by the cross-sectional area between the seats and plugs.

The position of the plugs is changed by the signal pressure acting on the actuator. The plug stem is sealed by means of a spring loaded PTFE-ring packing and connected to the actuator stem via the stem connector.

2.2tf506813.en

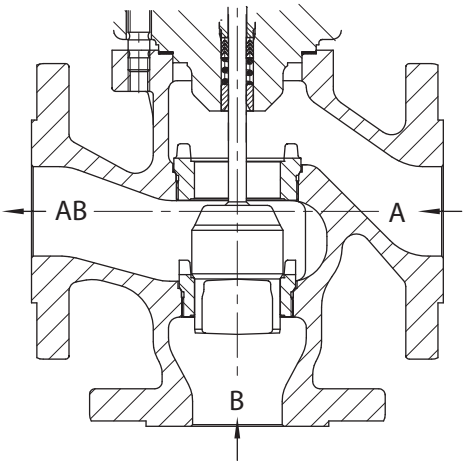

Plug arrangement for mixing service.
In DN 15 to DN 25 also for flow-diverting service.

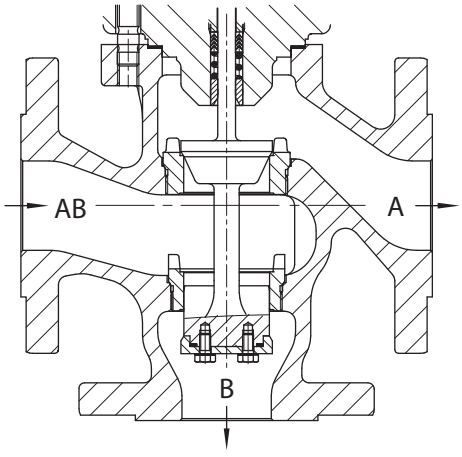

Plug arrangement for flow-diverting service in DN 32 to DN 150.

Actuator

The actuators complement the valves to form pneumatic control valves. The actuators basically consist of two diaphragm cases, a rolling diaphragm and springs.

The signal pressure creates a force which acts on the diaphragm. The springs installed in the diaphragm chamber oppose this force, thus ensuring compensation. When the signal pressure fails, the springs installed either in the top or bottom diaphragm chamber determine the actuator's **fail-safe position**.

Actuator stem extends
NC (Normally Closed) = FA

Upon signal pressure failure, the actuator stem extends and closes the valve. For which port is closed, see nameplate. Normally it is as follows:
- In mixing valves, port B is closed (NCB).
- In diverting valves, port A is closed (NCA).

Actuator stem retracts
NO (Normally Open) = FE

Upon signal pressure failure, the actuator stem retracts and opens the valve. For which port is opened, see nameplate. Normally it is as follows:
- In mixing valves, port B is opened. (NCA).
- In diverting valves, port A is opened. (NCB)

Tight-closing function

The pneumatic actuator is either fully vented or fully pressurized whenever the reference variable exceeds or falls below a certain preset value.

The lower and the upper range value of the input signal are adjusted to a fixed value at the zero adjuster and the potentiometer for span, however, they can be corrected after attachment to the valve.

2.2tf506813.en

Valve 3244

The control valve is subject to natural wear, especially at the seat, plug and packing. Depending on the application, the valve needs to be checked regularly to prevent against possible failures. If leakage occurs, this could be caused by a damaged packing.

Change Packing

WARNING!

Risk of injury!
Make sure before dismantling, that the pipeline is drained and free from media. Also, if necessary, allow the control valve to cool down or warm up to ambient temperature prior to starting any work on the valve.

Caution! On performing any work on the valve body, first shut off the supply pressure, disconnect the supply pressure line and remove the actuator. Removing the valve from the pipeline is recommend.

Note! Always separate the actuator and the valve prior to carrying out repairs!

If the valve leaks at the packing assembly, the packing (8) of the packing assembly needs to be exchanged as follows:

(Cont'd)

2.2tf506813.en

(Cont'd)

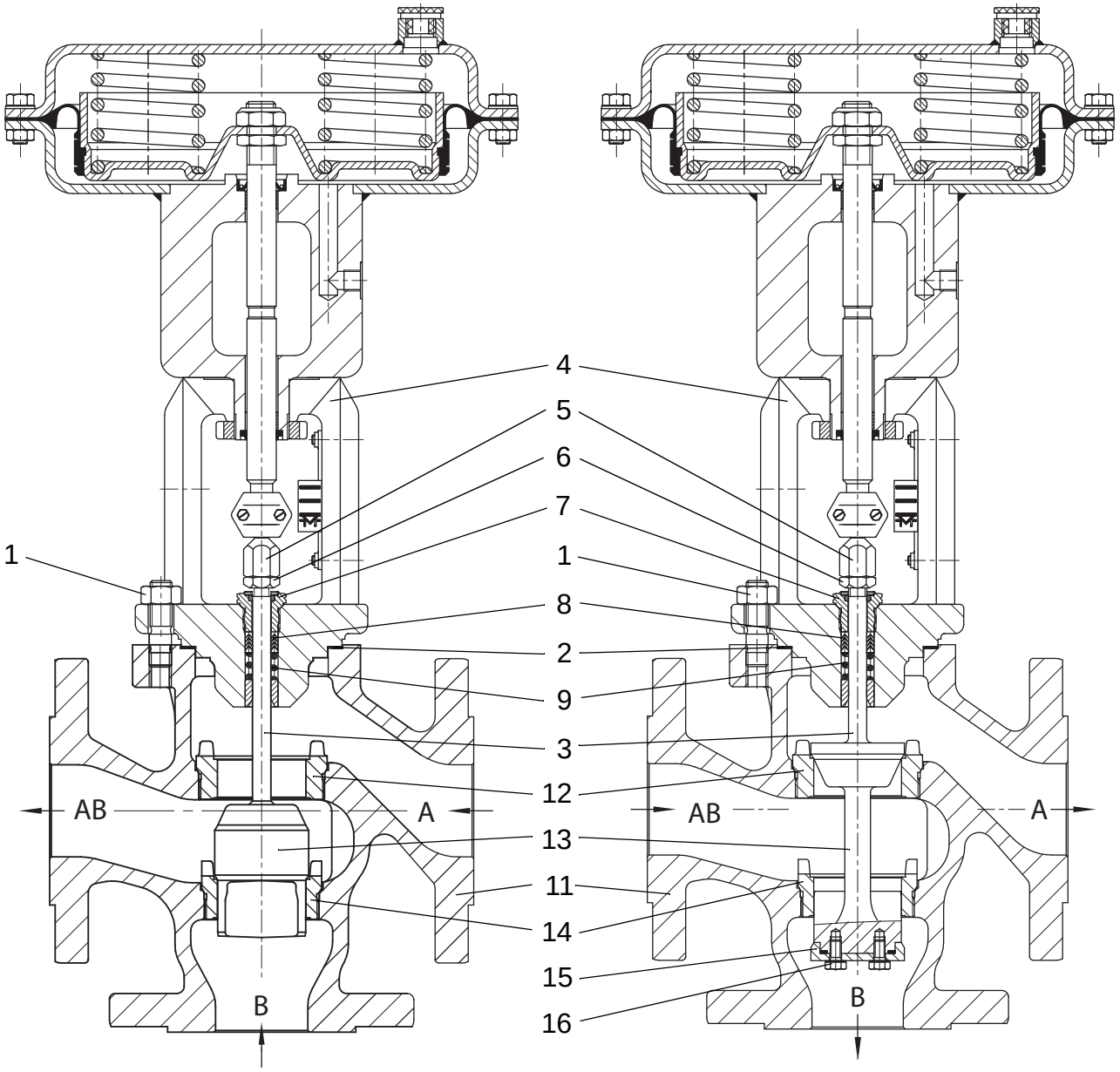

Mixing valve,
NC version

Diverting valve,
NC version

1 Nuts
2 Gasket
3 Plug stem
4 Valve bonnet
5 Stem connector nut
6 Lock nut
7 Threaded bushing
8 PTFE ring packing
9 Spring
11 Valve body
12 Top seat ring
13 Plug
14 Bottom seat ring
15 Plug part
16 Screw for plug part

(Cont'd)

(Cont'd)

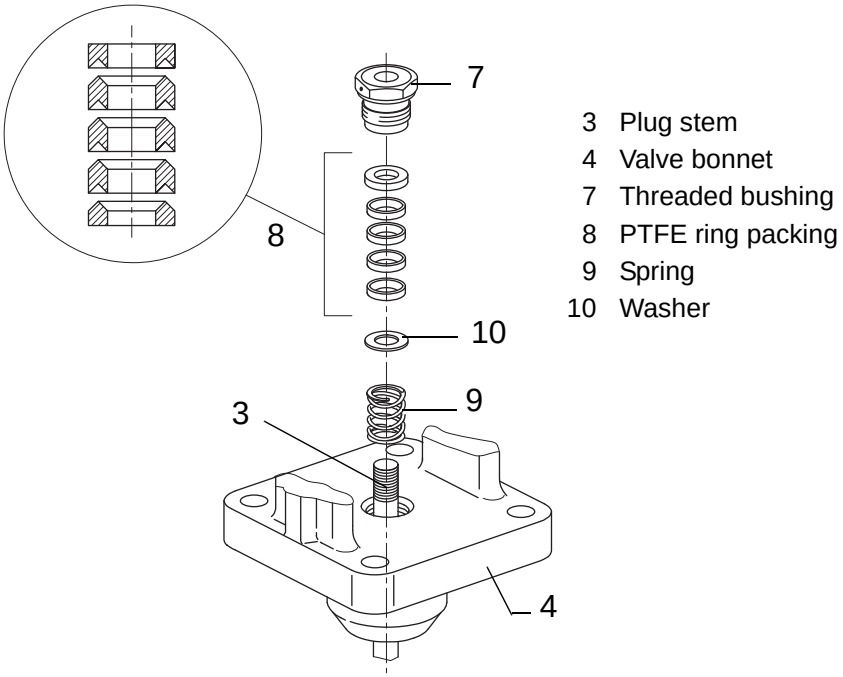

a) Remove the actuator as described in chapter **Separating the Valve From the Actuator**.

b) Unscrew stem connector nut (5) and lock nut (6) from the plug stem.

c) Unscrew threaded bushing (7).

d) Remove nuts (1). Lift valve bonnet (4) from the body over the plug stem.

e) Pull complete packing assembly out of the packing chamber using a suitable tool. Replace damaged parts as necessary. Thoroughly clean the packing chamber.

f) Remove gasket (2) and carefully clean the sealing surfaces in the valve body (11) and on the bonnet (4).

g) Apply lubricant (see chapter **Spare Parts**, section **Tools**) to all parts of the packing assembly and the plug stem (3).

h) Place a new gasket (2) into the valve body (11). Place valve bonnet (4) over the plug stem (3) on the valve body (11) and secure with nuts (1).

i) Carefully push packing assembly (9, 10 and 8) over the plug stem (3) into the packing chamber, observing the proper order. Screw in threaded bushing (7) and tighten.

j) Loosely screw lock nut (6) and stem connector nut (5) onto the plug stem (3).

k) Mount actuator and adjust upper and lower bench range values as described in chapter **Assembly and Adjustment**.

2.2tf506813.en

Replace the Seat and Plug

WARNING!

Risk of injury!
Remove the diverting valve from the pipeline before disassembling.

Note! Always separate the actuator and the valve prior to carrying out repairs!

The mixing and the diverting valve differ as to the arrangement of their plugs and sleeves. When replacing the seat and plug, it's recommended that you also exchange the packing and the gasket, see chapter **Change Packing**.

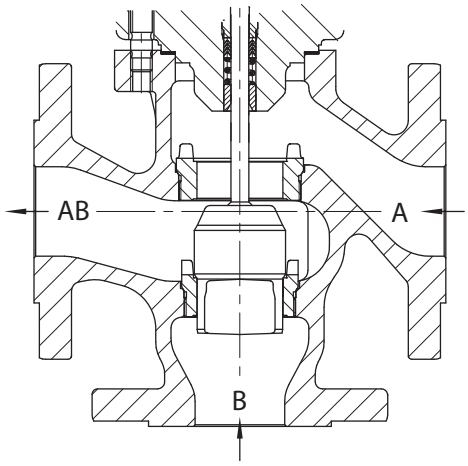

Plug arrangement for mixing service.
In DN 15 to DN 25 also for flow-diverting service.

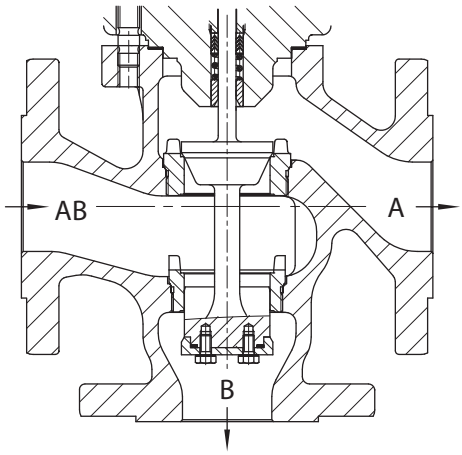

Plug arrangement for flow-diverting service in DN 32 to DN 150.

2.2tf506813.en

(Cont'd)

(Cont'd)

Disassembly/Reassembly

a) Remove the actuator as described in chapter **Separating the Valve From the Actuator**.

b) Unscrew stem connector nut (5) and lock nut (6) from the plug stem.

c) Remove threaded bushing (7).

d) Remove nuts (1). Lift valve bonnet (4) from the body over the plug stem (3).

Mixing Valve

e) Unscrew top seat ring (12) using the appropriate seat tool (see chapter **Spare Parts**, section **Tools**).

f) Remove plug stem (3) together with the plug (13).

g) Check seating surfaces of the seat rings. If necessary, unscrew bottom seat ring (14) as well and replace it.

h) Apply lubricant (see chapter **Spare Parts**, section **Tools**) and sealant to the thread and sealing cone of the seat rings. Also apply lubricant to the plug stem.

i) Reassemble in reverse order. Observe tightening torques for seat rings and nuts of the body flanges as specified in the table at the end of this chapter.

j) Loosely screw lock nut (6) and stem connector nut (5) onto the plug stem.

k) Mount actuator and adjust upper and lower bench range values as described in chapter **Assembly and Adjustment**.

(Cont'd)

2.2tf506813.en

(Cont'd)

Flow-Diverting Valve

Note! Only for sizes DN 32 to DN 150. For sizes DN 15 to DN 25, follow the instructions for the mixing valve above.

e) Remove screws (16). Also remove plug part (15) with its sealing ring from the plug (13). Remove plug stem (3) together with the plug (13).

f) Check seating surfaces of the seat rings. If necessary, unscrew bottom seat ring (14) using the appropriate seat tool (see chapter **Spare Parts**, section **Tools**) as well and replace it.

g) Apply lubricant (see chapter **Spare Parts**, section **Tools**) and sealant to the thread and sealing cone of the seat rings. Also apply lubricant to the plug stem.

h) Reassemble in reverse order. Observe tightening torques for seat rings and nuts of the body flanges as specified in the table at the end of this chapter.

e) Check sealing ring when mounting the plug part (15) and replace it, if necessary.

f) Loosely screw lock nut (6) and stem connector nut (5) onto the plug stem.

g) Mount actuator and adjust upper and lower bench range values as described in chapter **Assembly and Adjustment**.

2.2tf506813.en

Tightening torques			
Nominal size DN	Seat thread Port A mm Tightening torque Nm	Seat thread Port B mm Tightening torque Nm	Nuts and bolts Tightening torque Nm
15...25	M36 x 1.5 170 Nm	M32 x 1.5 170 Nm	4 x M10 10 Nm
32...50	M68 x 1.5 500 Nm	M62 x 1.5 500 Nm	4 x M12 30 Nm
65 and 80	M95 x 1.5 1050 Nm	M88 x 1.5 1050 Nm	4 x M16 60 Nm
100	M125 x 1.5 1550 Nm	M118 x 1.5 1550 Nm	4 x M20 100 Nm
125	M140 x 1.5 1900 Nm	M130 x 1.5 1900 Nm	8 x M16 60 Nm
150	M165 x 1.5 2600 Nm	M152 x 1.5 2600 Nm	8 x M20 100 Nm

Actuator 3277

Note! The pneumatic actuators are designed for a maximum supply pressure of 6 bar. To prevent the actuator from being damaged, do not let the supply pressure exceed the upper spring range value by more than 3 bar when the actuator is used for flow-switching service (on-off valve) with the fail-safe position **"Actuator stem retracts"(NO)**. Label actuators that have a reduced supply pressure with a sticker "max. supply pressure limited to … bar".

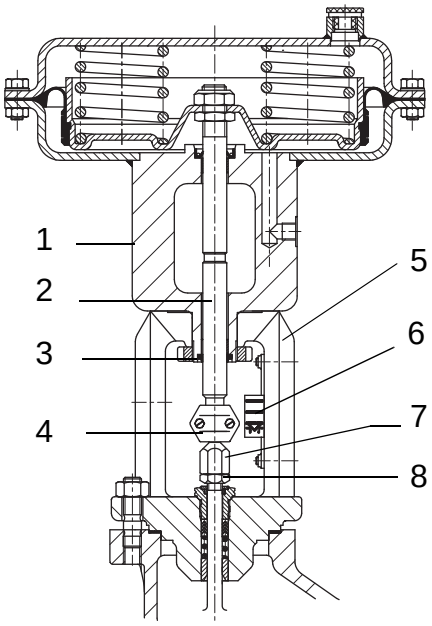

1 Actuator
2 Actuator stem
3 Annular nut
4 Stem connector
5 Valve bonnet
6 Travel indicator scale
7 Stem connector nut
8 Lock nut

2.2tf506813.en

Separating the Valve From the Actuator

Note! When disassembling actuators with fail-safe action **"Actuator stem extends"(NC)** and particularly versions with pretensioned springs, **apply a pressure slightly higher than the lower bench range value (see actuator nameplate) to the bottom signal pressure connection before unscrewing the annular nut (3)**.

Caution! Actuators with springs that have already been pretensioned by the manufacturer without attachment to a valve are marked by an appropriate label. In addition, such actuators can be identified by three bolts and nuts protruding from the bottom diaphragm case. These bolts and nuts allow you to evenly relieve the compression when disassembling the actuator.

a) Remove stem connector (4) and unscrew annular nut (3).To remove the annular nut (3), apply a pressure slightly higher than the lower bench range value (see actuator nameplate) before disassembling actuators with fail-safe action **"Actuator stem extends" (NC)** and particularly actuator versions with pretensioned springs.

b) Lift actuator (1) from the valve bonnet (5).

2.2tf506813.en

Assembly and Adjustment

If the valve and actuator have not been preassembled by the manufacturer, or if the original actuator is replaced by a different actuator size or model, proceed as follows to assemble the valve and actuator:

a) Loosen lock nut (8) and stem connector nut (7) from the valve. Firmly press the plug with the plug stem into the seat ring. Turn stem connector nut and lock nut downward.

b) Remove clamps of the stem connector (4) and annular nut (3) from the actuator (1). Push the annular nut over the plug stem.

c) Place the actuator on the valve bonnet (5) and screw tight with the annular nut (3).

d) Read bench range (or range with pretensioned springs) and fail-safe action from the nameplate of the actuator (e.g. 0.2 to 1 bar and "Actuator stem extends").

Note! The operating mode (fail-safe action) **"Actuator stem extends" (NC)** or **"Actuator stem retracts" (NO)** is indicated on the nameplate by the appropriate symbol on the actuator.

The lower bench range value (0.2 bar) corresponds to the lower signal pressure range to be adjusted; the upper bench range value (1 bar) corresponds to the upper signal pressure range.

2.2tf506813.en

In actuator version **"Actuator stem extends" (NC)**, apply a pressure corresponding to the lower bench range value (e.g. 0.2 bar) to the signal pressure connection on the bottom diaphragm case. In actuator version **"Actuator stem retracts" (NO)**, apply a pressure corresponding to the upper bench range value (e.g.1 bar) to the connection on the top diaphragm case.

Note! Make sure on assembling the valve that the stem seal (9) does not get damaged.The maximum possible travel of the actuator may not exceed the maximum permissible valve travel (see adhesive label on the yoke).

e) Turn the stem connector nut (7) by hand until it touches the actuator stem (2). Turn it another quarter turn and secure position with the lock nut (8).

f) Position clamps of the stem connector (4) and fasten. Align travel indicator scale (6) with tip of the stem connector; for actuators with **"Actuator stem extends" (NC)** align it with lower marking (valve closed) and for actuators with **"Actuator stem retracts" (NO)** align it with top marking (valve open).

Note! **Always** re-calibrate the zero point when the actuator and the valve have been separated, see chapter **Zero Presetting/Calibration**.

(Cont'd)

(Cont'd)

Adjustments

Option to pretension the springs for actuator version "Actuator stem extends".

To achieve a greater thrust, the springs of actuators (350 and 700 cm^2) can be pretensioned by up to 25 % of their travel or their bench range.

Example: If, with a bench range of 0.2 to 1 bar, the springs are to be pretensioned by 0.1 bar, for example, the bench range is shifted by 0.1 bar, resulting in a new bench range of 0.3 to 1.1 bar (0.1 bar corresponds to a compression of 12.5 %). When adjusting the valve, a signal pressure of 0.3 bar is to be set as the lower signal pressure range. The new bench range of 0.3 to 1.1 bar must be marked on the nameplate as bench range with pretensioned springs.

Valve and actuator that have different rated travels.

Note! Valves that have a smaller travel than that of the actuator must always use pretensioned springs.

Caution! Actuators with springs that have already been pretensioned by the manufacturer without attachment to a valve are marked by an appropriate label. In addition, such actuators can be identified by three bolts and nuts protruding from the bottom diaphragm case.

2.2tf506813.en

Replacing the Diaphragm and Stem Seal

Remove the actuator as described in chapter **Separating the Valve From the Actuator**.

Caution! To disassemble an actuator with preloaded actuator springs (recognizable by the long bolts on the diaphragm chambers), always undo the short bolts first and then unthread the long bolts slowly and evenly until the actuator springs are fully decompressed.

Note! Actuators with 700 cm² (travel = 30 mm) that are mounted to valves with 15 mm travel, are preloaded by approx. 75 % on mounting them to the valve.The signal pressure range is recorded on the nameplate when the actuators have been preloaded on mounting them to the valve.

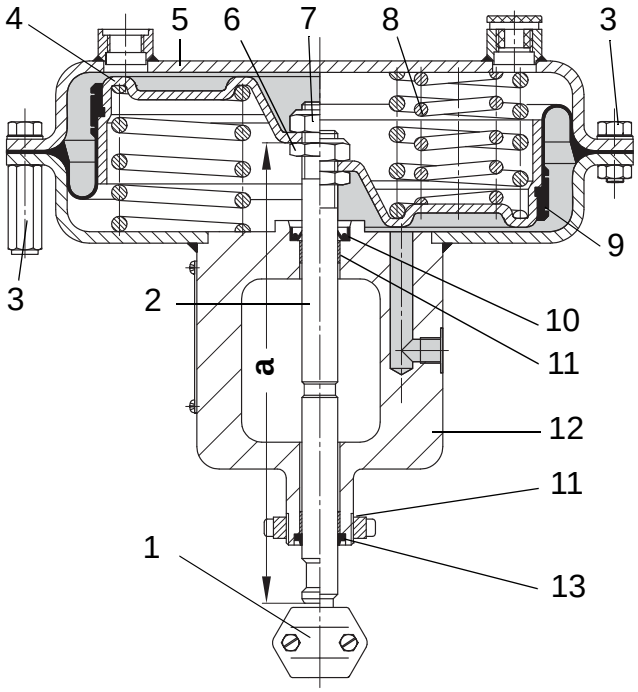

"Actuator stem retracts" / "Actuator stem extends"

Dimension **a**
See **Caution!** on next page.

120 cm² (15 mm travel) = 188,5 mm
120 cm² (20 mm travel) = 185,5 mm
350 cm² = 209 mm
700 cm² = 246 mm

1 Stem connector
2 Actuator stem
3 Nuts and bolts
4 Diaphragm plate
5 Top diaphragm case
6 Nut
7 Nut
8 Springs
9 Diaphragm
10 Stem seal
11 Dry bearing
12 Yoke with bottom diaphragm case
13 Wiper

2.2tf506813.en

Diaphragm

a) Unthread nuts and remove the bolts (3) from the diaphragm cases.

WARNING!

Risk of injury!
Loosen the short bolts first, **then slowly and in a criss-cross pattern the long bolts and nuts until the actuator springs are relieved of tension**.

b) Lift off the top diaphragm case (5) and remove the springs (8) (NC-version).

c) Pull the actuator stem (2) with diaphragm plate (4) and diaphragm (9) out of the yoke (12).

d) Unscrew nut (7), while holding the nut (6) stationary or clamping the actuator stem with a suitable tool.

Caution! Proceed carefully to avoid damaging the seals of the actuator stem.

Caution! Do not loosen the nut (6) on the actuator stem. It is painted over to protect it. If, however, it has been loosened, it is essential that the dimension **a** measured from the **top of the nut** to the **bottom of the actuator stem** is kept.

e) Remove the hose clamp and pull it together with the diaphragm (9) off the diaphragm plate (4).

f) Stretch the new diaphragm onto the diaphragm plate. Fit the hose clamp evenly into the groove intended for it and tighten.

g) Apply lubricant (see chapter **Spare Parts**, section **Tools**) to the sealing places on the actuator stem.

h) Insert the springs (8) and slide the yoke with bottom diaphragm case over the actuator stem.

i) Screw tight the nuts and bolts (3) of the diaphragm cases.

2.2tf506813.en

Stem Seal

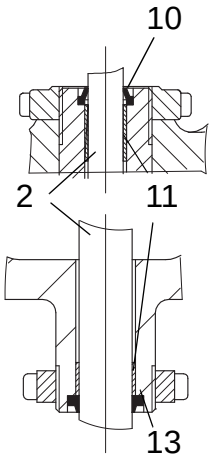

2 Actuator stem
10 Stem seal
11 Dry bearing
13 Wiper

a) Unthread nuts and remove the bolts (3) from the diaphragm cases.

b) Lift off the top diaphragm case (5) and remove the springs (8).

c) Pull the actuator stem (2) with diaphragm plate (4) and diaphragm (9) out of the yoke (12).

d) Coat the new stem seal (10) with lubricant (see chapter **Spare Parts**, section **Tools**) and insert it.

e) If necessary, replace the dry bearing (11) and wiper (13) with new ones as well.

f) Insert the springs (8) and slide the yoke with bottom diaphragm case over the actuator stem.

g) Screw tight the nuts and bolts of the diaphragm cases (3).

2.2tf506813.en

Positioner

Change Positioner

WARNING! **Risk of injury!**
Make sure before dismantling, that the pipeline is drained and free from media. Also, if necessary, allow the control valve to cool down or warm up to ambient temperature prior to starting any work on the valve.

WARNING! **Risk of injury!**
Shut off the electrical supply and depressurize the positioner before dismantling.

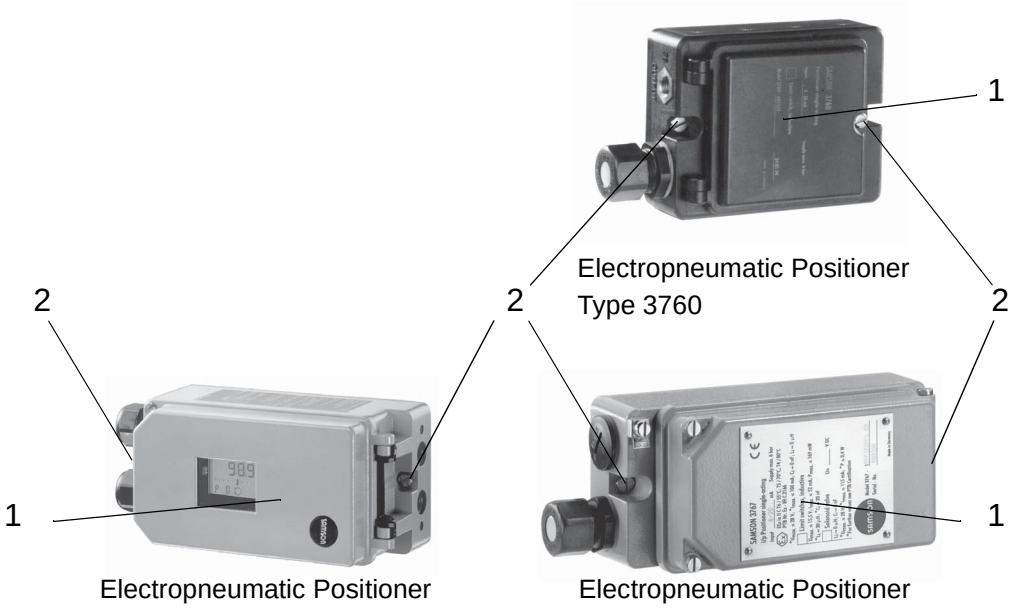

Electropneumatic Positioner Type 3760

Electropneumatic Positioner Type 3730-1 (-2, -3, -4, -5)

Electropneumatic Positioner Type 3767

2.2tf506813.en

1 Positioner hatch
2 Mounting screws

a) Open the positioner hatch (1) and mark the electrical supply cables inside.

b) Dismantle the electrical- and pneumatic connection.

Note! Remember to unhook the **Range Spring** from the **lever** at the back of the positioner **type 3760** before continuing the disassembly.
See picture in the 3760 chapter below.

c) Unscrew the mounting screws (2) and remove and change the positioner.

d) Assemble in reverse order.

Zero Presetting/Calibration

In case of inconsistencies in the closing position of the valve, e.g. with soft-sealed plugs, it may necessary to re-calibrate the zero point.

Note! **Always** re-calibrate the zero point when the positioner and the valve have been separated.

3730-1

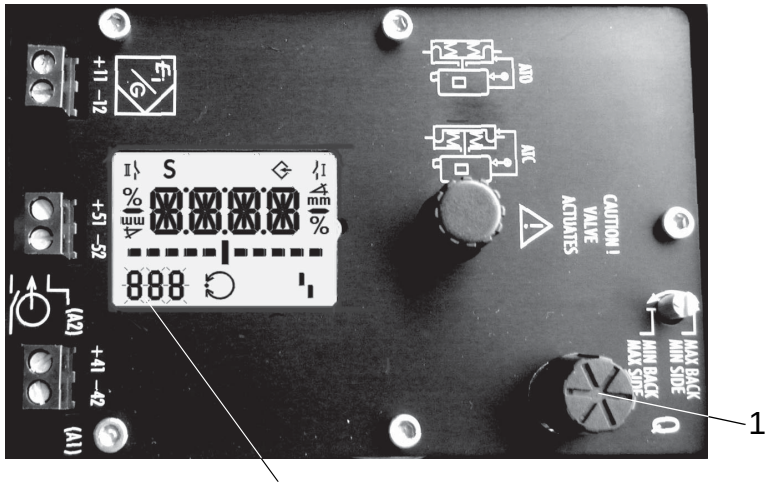

1 Rotary push button
2 Parameter/error code

2.2tf506813.en

Start the zero calibration by activating Code P16 as follows:

a) Turn rotary push button (1) until Code **P16** appears (2).

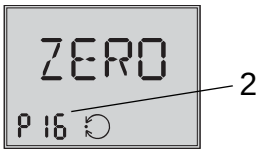

b) Press rotary push button (1) 6 seconds long, 6-5-4-3-2-1 is counted down on the display.

c) Zero calibration has started, the display blinks!

d) The positioner moves the control valve to the CLOSED position and recalibrates the internal electric zero point.

e) When the zero calibration has been successfully completed, the positioner returns to closed loop operation (status indication).

Cancelling zero calibration

The zero calibration can be cancelled by pressing rotary pushbutton (1). The positioner then moves to the fail-safe position (indicated by S on the display).

A new zero calibration can be started directly afterwards.

3730-2, 3730-3

Note! The valve briefly moves from the current travel/angle of rotation position to the closed position.

Note! The positioner must be connected to the supply air to perform the zero calibration.

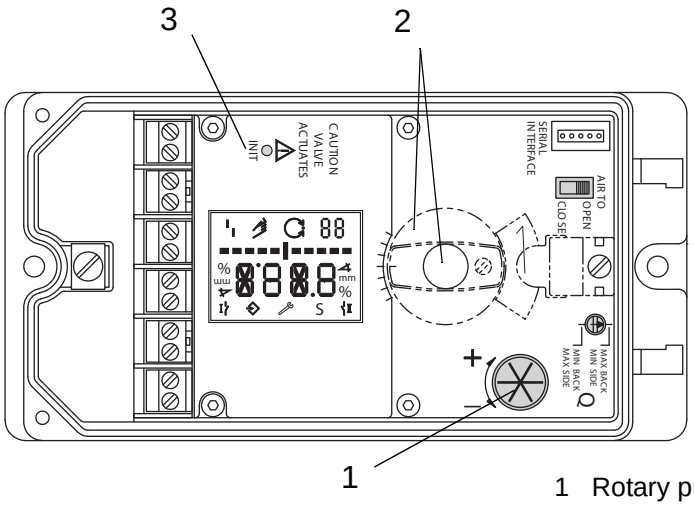

1 Rotary push button
2 Cap or rotary switch
3 Initialization key

2.2tf506813.en

Enable configuration:

a) Turn rotary push button (1) → Code 3, display: No
b) Press rotary push button (1), Code 3 blinks
c) Turn rotary push button (1) → YES
d) Press rotary push button (1) → Display (4)

(Cont'd)

(Cont'd)

Perform zero calibration:

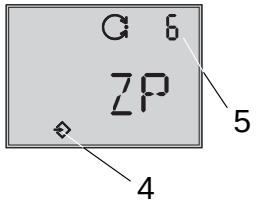

4 Configuration enabled
5 Code

e) Turn push button (1) → Code 6
f) Press push button (1), Code 6 blinks
g) Turn push button (1) → ZP
h) Press push button (1)
i) Press INIT key (3)!

Zero calibration is started, the positioner moves the control valve to the CLOSED position and readjusts the internal electrical zero point.

2.2tf506813.en

3730-4, 3730-5

Note! The valve briefly moves from the current travel/angle of rotation position to the closed position.

Note! The positioner must be connected to the supply air to perform the zero calibration.

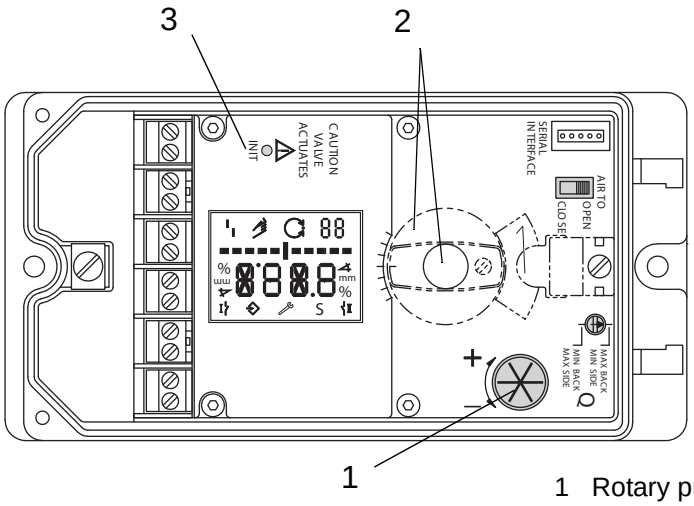

1 Rotary push button
2 Cap or rotary switch
3 Initialization key

2.2tf506813.en

Enable configuration:

a) Turn rotary push button (1) → Code **3**
b) Press rotary push button (1)
c) Turn rotary push button (1) → **ON**
d) Press rotary push button (1) → Display (4)

(Cont'd)

(Cont'd)

Perform zero calibration:

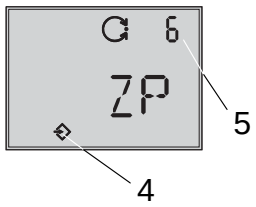

4 Configuration enabled
5 Code

e) Turn push button (1) → Code 6
f) Press push button (1), Code 6 blinks
g) Turn push button (1) → ZP
h) Press push button (1)
i) Press INIT key (3)!

Zero calibration is started, the positioner moves the control valve to the CLOSED position and readjusts the internal electrical zero point.

2.2tf506813.en

3760

Adjustment for "Actuator Stem Extends'' (NC)

Note! To ensure that the entire closing force can be effective in the control valve, the diaphragm chamber must be completely vented when reaching the lower (operating direction >>) and the upper (operating direction <>) range value of he reference variable.

Therefore, set input signal to a slightly increased starting point of approx. 0.23 bar (4.5 mA) when the operating direction is direct >>, and to a slightly lowered starting point of 0.97 bar (19.5 mA) when the operating direction is reverse <>. This applies in particular to controllers and control systems whose output signal is limited to a range of 4 to 20 mA.

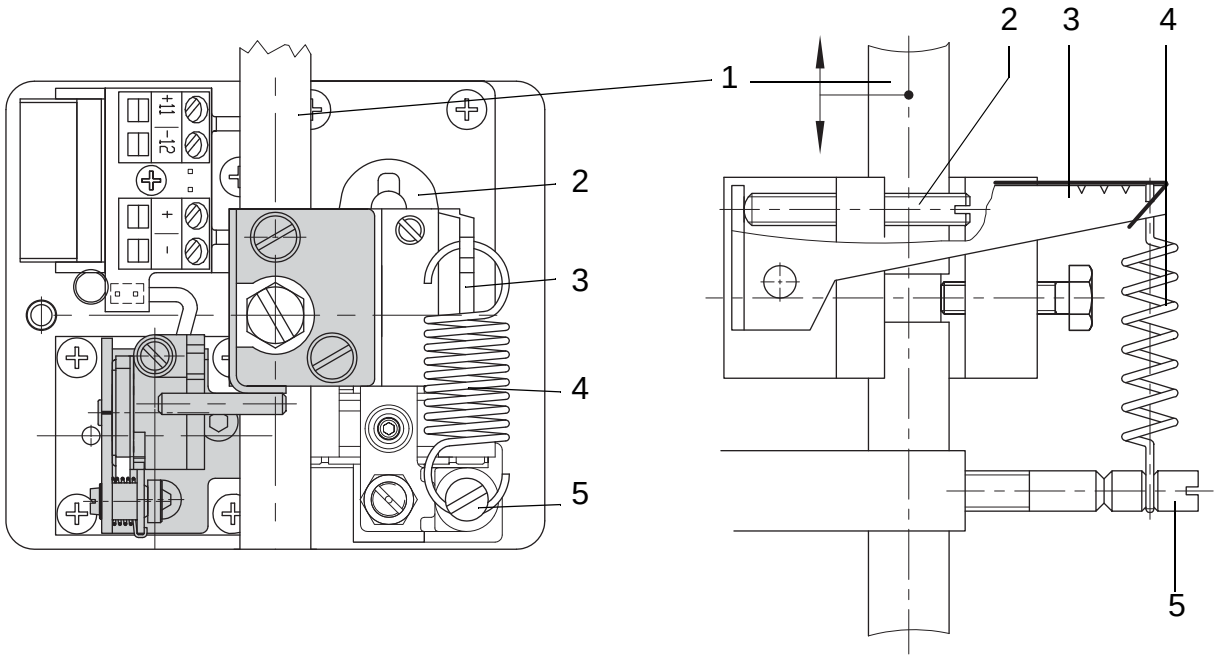

2.2tf506813.en

1 Travel
2 Adjustment screw zero
3 Lever
4 Range spring
5 Adjustment screw span

Stating Point (Zero)

e.g. 0.23 bar (4.5 mA)

a) Turn ZERO adjustment screw (2) until the plug stem just begins to move from its resting position (observe plug stem via travel indicator).

b) Decrease input signal and increase again slowly. Check whether the plug stem starts moving at a starting point of 0.23 bar (4.5 mA) and correct it, if necessary.

Upper Range Value (Travel)

e.g. 1 bar (20 mA)

c) After the starting point has been adjusted, increase input signal. The plug stem must stand still at an upper range value of exactly 1 bar (20 mA). It must have passed through 100 % travel (observe the travel indicator on the valve!). If the upper range value does not correlate, correct it via SPAN adjustment screw (5). Turning the screw towards the fulcrum of the lever increases the travel, whereas turning it away reduces the travel.

Note! Make sure that the range spring (4) is vertical for adjustment. If necessary, hook he spring at another point on the lever (3).

Caution! If you change the span, the zero point must be readjusted as well.

d) Check upper range value again. Readjust both values until they are correct.

2.2tf506813.en

Adjustment for "Actuator Stem Retracts" (NO)

Note! For actuator version "Actuator stem retracts", the diaphragm chamber must be loaded wish a pressure that is sufficient to tightly close the valve, even when upstream pressure of the plant prevails. The upper range value of the reference variable must be 1 bar or 20 mA (direct operating direction >>) and the lower input range value must be 0.2 bar or 4 mA (reverse operating direction <>).

Starting Point (zero) e.g. 1 bar (20 mA)

a) Adjust input signal to 1 bar (20 mA) using the remote adjuster (ammeter).

b) Turn ZERO adjustment screw (2) until the plug stem just begins to move from its initial position.

c) Increase input signal and slowly reduce it to 1 bar (20 mA). Check if the valve begins to move at exactly 1 bar (20 mA).

d) Correct any deviations using the ZERO adjustment screw (2). Upper range value (travel) e.g. 0.2 bar (4 mA).

e) After the starting point has been adjusted, set the input signal to 0.2 bar (4 mA) via remote adjuster (ammeter). The plug stem must stand still at an upper range value of exactly 0.2 bar (4 mA). It must have passed through 100 % travel (observe the travel indicator on the valve!).

f) If the upper range value does not correlate, correct it using the SPAN adjustment screw (5). Turning the screw towards the fulcrum of the lever increases the travel, whereas turning it away reduces the travel.

Caution! If you change the span, the zero point must be readjusted as well.

g) Check upper range value again. Readjust both values until they are correct.

h) When correction has been completed, adjust input signal to 1 bar (20 mA) again.

i) Turn ZERO adjustment screw (2) again until the required signal pressure is indicated on a pressure gauge installed in the signal pressure line. If no pressure gauge is available, adjust the starting point to 0.97 bar (19.5 mA).

Note! After adjusting the positioner, close the actuator yoke with the cover plate. Make sure that the vent plug in the cover plate is directed downwards when the control valve is installed in the plant to prevent condensed water from collecting in the positioner.

2.2tf506813.en

3767

Adjusting the Position Transmitter

Note! The starting point (zero) and upper range value (span) must be set before calibrating the position transmitter.

Depending on the position of the 4-pin plug (symbol on plug: >> or <>), the feedback signal can be set to either a range of 4 to 20 mA or 20 to 4 mA for 0 to 100 % travel.

Zero point (ZERO)

Use the switches 1 and 2 to preset the zero point and the ZERO potentiometer for fine-tuning. The adjusted value always refers to 4 mA.

Span (SPAN)

Use the switches 3 and 4 to preset the span, i.e. the upper range value, and the SPAN potentiometer for fine-tuning. The adjusted value always refers to 20 mA.

Example:

Move the valve to open position while observing the position transmitter signal. If the signal does not move in the desired direction, switch over the multi-pin plug. Adjust the zero point (4 mA) and span (20 mA) for the valve positions according to table below.

2.2tf506813.en

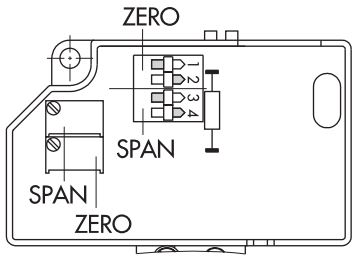

Position transmitter			
Valve movement	Observed transmitter signal	Direction of signal	Adjust zero/span to
OPEN ↑ CLOSED	Current increases ↑	OK	20 mA Valve OPEN 4 mA Valve CLOSED
		Not OK → Reconnect plug	4 mA Valve OPEN 20 mA Valve CLOSED
	Current decreases ↓	OK	4 mA Valve OPEN 20 mA Valve CLOSED
		Not OK → Reconnect plug	20 mA Valve OPEN 4 mA Valve CLOSED

Adjusting the Zero Point

a) Use the input signal of the positioner to move the valve to closed position (valve CLOSED – travel 0 %).

b) The ammeter must now indicate approx. 4 mA.

c) Correct smaller deviations on the ZERO potentiometer until the meter shows exactly 4 mA. If deviations are too high and cannot be corrected using the potentiometer (adjustment range of approx.20 turns), set the switches 1 and 2 to indicate an mA value which is within the adjustment range of the ZERO potentiometer.

d) Set the zero point to exactly 4 mA using the ZERO potentiometer.

2.2tf506813.en

Adjusting the Span

a) Use the input signal of the positioner to move the valve to open position (valve OPEN – travel 100 %).

b) The ammeter must now indicate approx.20 mA.

c) Correct smaller deviations on the SPAN potentiometer until the meter shows exactly 20 mA. If deviations are too high, set the switches 3 and 4 to indicate an mA value which is within the adjustment range of the SPAN potentiometer.

d) Turn the SPAN potentiometer until the meter shows exactly 20 mA. Since zero and span have a mutual influence on each other, repeat the correction procedure at both potentiometers until both values are correct.

Spare Parts

Mixing valve 3244

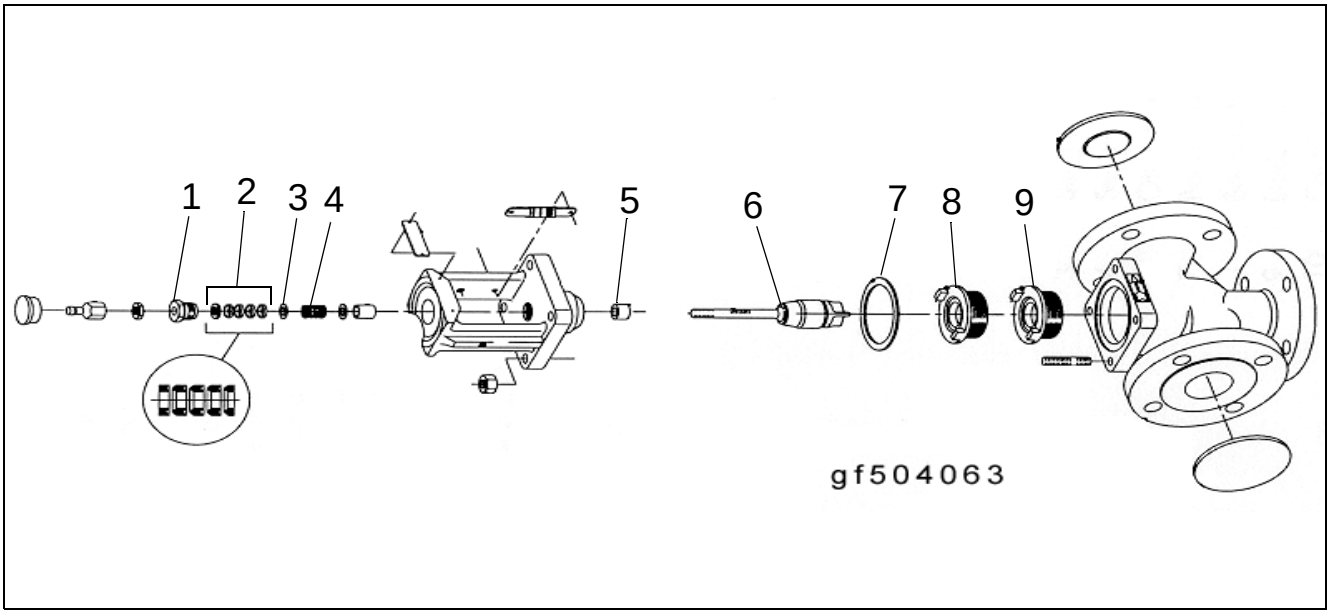

Description Spare part kit, Mixing valve	Spare part article No.	Included parts	Pos.	Qty.
DN 25, Kvs 4	6-990425-16	Threaded bushing Sealing box V-ring Washer sealing box Spring sealing box Bushing Cone Seal Upper seat Lower seat	1 2 3 4 5 6 7 8 9	1 1 1 1 1 1 1 1 1
DN 25, Kvs 6,3	6-990425-17			
DN 25, Kvs 10	6-990425-18			
DN 32, Kvs 16	6-990425-19			
DN 40, Kvs 25	6-990425-20			
DN 50, Kvs 40	6-990425-21			
DN 65, Kvs 60	6-990425-22			
DN 80, Kvs 80	6-990425-23			
DN 100, Kvs 160	6-990425-24			
DN 150, Kvs 200	6-990425-25			
DN 150, Kvs 300	6-990425-26			

1.0tf506814.en

Diverting valve 3244

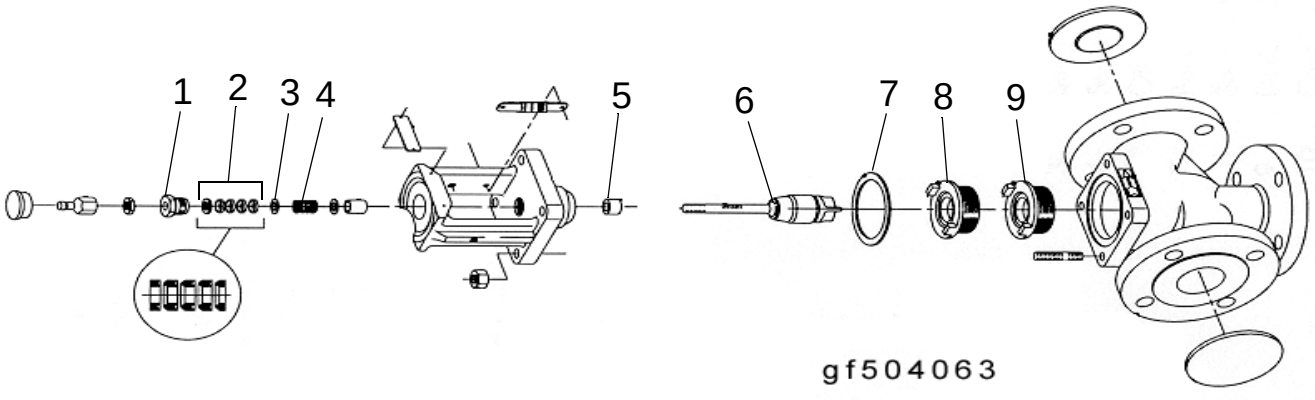

Description Spare part kit, Diverting valve	Spare part article No.	Included parts	Pos.	Qty.
DN 25, Kvs 4	6-990425-16	Threaded bushing Sealing box V-ring Washer sealing box Spring sealing box Bushing Cone (Mixing cone shown) Seal Upper seat Lower seat	1 2 3 4 5 6 7 8 9	1 1 1 1 1 1 1 1 1
DN 25, Kvs 6,3	6-990425-17			
DN 25, Kvs 10	6-990425-18			
DN 40, Kvs 25	90512-7404	Threaded bushing Sealing box V-ring Washer sealing box Spring sealing box Bushing Cone (plug) **Separate below** Seal Upper seat Lower seat	1 2 3 4 5 6 7 8 9	1 1 1 1 1 - 1 1 1
DN 65, Kvs 60/40	90512-7405			
DN 80, Kvs 60	90512-7409			
DN 100, Kvs 160	90512-7406			
DN 125, Kvs 200/140	90512-7407			
DN 150, Kvs 300/200	90512-7408			

1.0tf506814.en

Description Spare part kit, Diverting valve	Spare part article No.	Included parts	Pos.	Qty.
DN 40, Kvs 25	90512-7400	Plug (Mixing plug shown)	6	1
DN 65, Kvs 60/40	90512-7401			
DN 80, Kvs 60	90512-7399			
DN 100, Kvs 160	90512-7402			
DN 125, Kvs 200/140	90512-7398			
DN 150, Kvs 300/200	90512-7403			
DN 100, Kvs 100	90512-3480	Threaded bushing Sealing box V-ring Washer sealing box Spring sealing box Bushing Cone Seal Upper seat Lower seat	1 2 3 4 5 6 7 8 9	1 1 1 1 1 1 1 1 1
DN 150, Kvs 60	90515-8474			

1.0tf506814.en

Actuator 3277

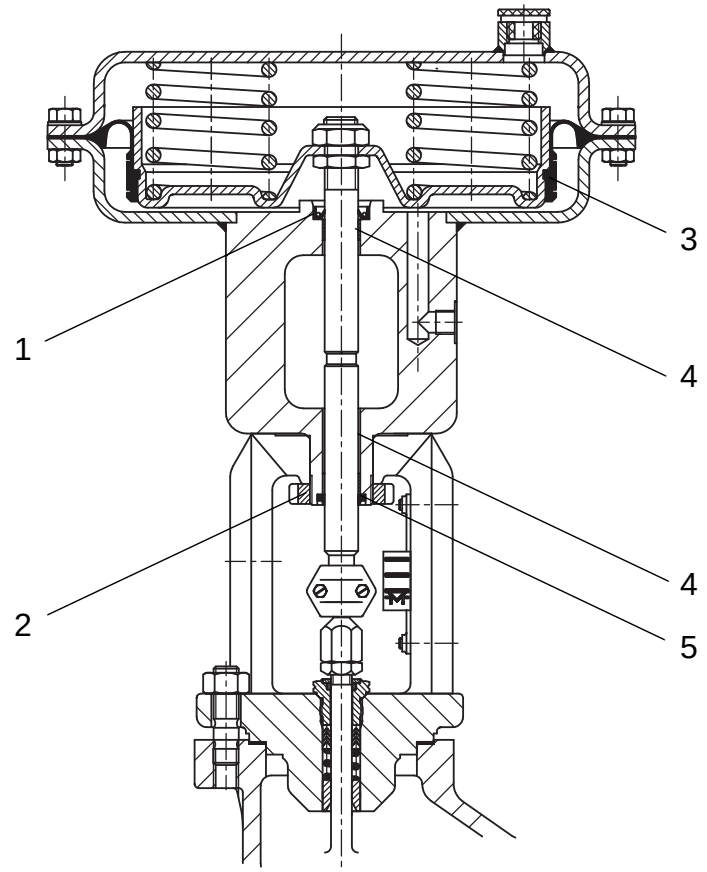

1.0tf506814.en

Description Spare part kit, actuator	Spare part article No.	Included parts	Pos.	Qty.
120 cm^2	6-990425-37	Seal Lock nut Diaphragm Stripper	1 2 3 5	1 1 1 1
240 cm^2	6-990418-97	Seal Lock nut Diaphragm Bushing Stripper	1 2 3 4 5	1 1 1 2 1
350 cm^2	6-990417-68			
700cm^2	6-990417-69			

Positioner



Description Positioner, complete unit	Spare part article No.	Included parts	Pos.	Qty.
3730-1	90510-4762	-	-	1
3730-2	90503-4689	-	-	1
3730-3	90510-4763	-	-	1
3730-4	90510-4764	-	-	1
3730-5	90510-4765	-	-	1
Mounting kit 3730 to actuator 3277, 120 cm^2 NC/NO	90510-4441	-	-	1
Mounting kit 3730 to actuator 3277, 240-700 cm^2 NC	90512-1665	-	-	1
Mounting kit 3730 to actuator 3277, 240 cm^2 NO	90512-1666	-	-	1
Mounting kit 3730 to actuator 3277, 350 cm^2 NO	90512-1667	-	-	1
Mounting kit 3730 to actuator 3277, 700 cm^2 NO	90512-1668	-	-	1

1.0tf506814.en

Note! At exchange of positioner 3760 and 3767; Choose 3730-1 together with mounting kit that correspond with actuator size and function.

Tools

Seat tool

Description Seat tool, complete	Spare part article No.	Included parts	Pos.	Qty.
DN 65-80	90512-6981	Supporting flange Socket Guide bushing	-	1 1 1
DN 100	90512-6982	Supporting flange Socket Socket holder Guide bushing	-	1 1 1 1

Torque wrench

Description Torque wrench	Spare part article No.	Included parts	Pos.	Qty.
10 - 100 Nm	90512-6983	-	-	1
50 - 300 Nm	90510-4303	-	-	1
Torque multiplier, IP30, 3000 Nm	90510-4302	-	-	1

1.0tf506814.en

Lubrication

Description Lubrication	Spare part article No.	Included parts	Pos.	Qty.
Grease	90512-7283	-	-	1

This page intentionally left blank

1.0tf506814.en

Tetra Pak

Maintenance & Spare Parts

Regulating Valve

(Samson)

3321/3372-I/P

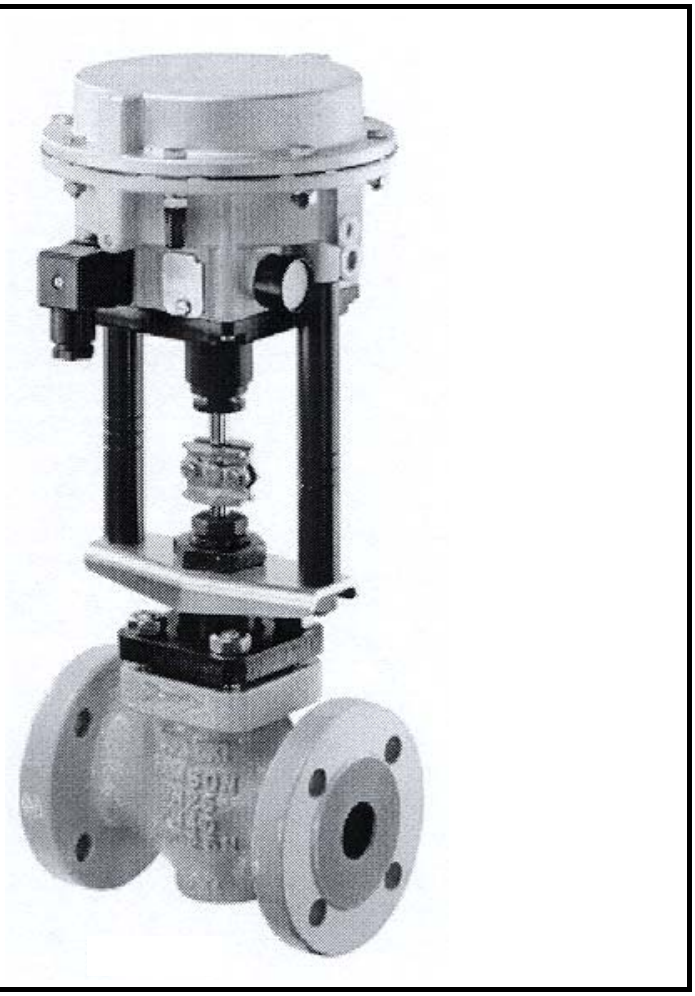

2.21224796-0101.fro

Tetra Pak

Doc No. 1224796-0101

Regulating Valve

3321/3372-I/P

This document refers to components specified in Technical Manual, on Maintenance & Spare Parts CD/DVD or on Tetra Pak Intranet.

2.21224796-0101.fro

Version 01 Issue 2010-11

Doc No. 1224796-0101

Tetra Pak

Tetra Pak Processing Systems AB

Maintenance 1

General 1

Valve 1

Actuator 2

Valve 3321 3

Change Packing 3

Change Valve Plug 6

Change Valve Seat 6

Actuator 3372 I/P 7

Separating the Valve From the Actuator 7

Change Actuator 9

Change Diaphragm and Spare Parts 10

Checking - Adjusting Zero and Span 12

Adjusting Actuators with Fail-Safe Position " Actuator Stem Extends" (NC) 13

Adjusting Actuators with Fail-Safe Position "Actuator Stem Retracts" (NO) 14

Spare Parts 16

Valve 3321 16

Actuator 3372 I/P 18

Tools 19

1.0 1224796-0101.TOC

This page intentionally left blank

Maintenance

General

Valve

The Type 3321 Globe Valve is based on the modular principle and can be combined with pneumatic actuators as well as electric actuators.

The process medium flows through the valve in the direction indicated by the arrow. The valve plug position determines the cross-sectional area of flow between the seat and the plug.

The position of the plug is changed by the control signal acting on the actuator.

The plug stem is sealed by a spring-loaded PTFE V-ring packing and connected to the actuator stem by a stem connector.

2.2tf506815.en

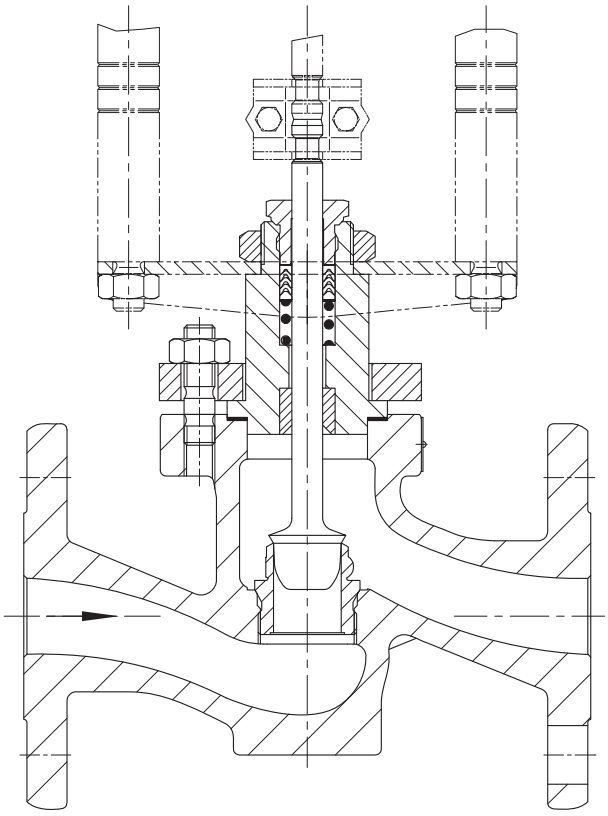

Version DN 15 to 50
(NPS ½ to 2)

Actuator

The actuators complement the valves to form pneumatic or electro-pneumatic control valves. The actuators basically consist of two diaphragm cases, a rolling diaphragm and springs.

The electro-pneumatic actuators are additionally equipped with an I/P converter and a pneumatic control system. For actuators with fail-safe position "actuator stem extends", the converter and the control system are mounted in the lower diaphragm case, and for versions "actuator stem retracts", in the upper diaphragm case.

The signal pressure creates a force which acts on the diaphragm. The springs installed in the diaphragm chamber oppose this force, thus ensuring compensation. When the signal pressure fails, the springs installed either in the top or bottom diaphragm chamber determine the actuator's **fail-safe position**.

Actuator stem extends
NC (Normally Closed) = FA

Upon signal pressure failure, the actuator stem extends and closes the valve (globe valve).

Actuator stem retracts
NO (Normally Open) = FE

Upon signal pressure failure, the actuator stem retracts and opens the valve (globe valve).

2.2tf506815.en

Electro-pneumatic actuators

The electric control signal issued by the controller is transmitted as reference variable ranging from 4 to 20 mA to the I/P converter where it is converted into a proportional pressure signal. The pressure signal creates a force that acts on the measuring diaphragm. This force is then compared with the force of the measuring spring. The movement of the measuring diaphragm is transmitted via the lever to the force switch, and finally a corresponding signal pressure is produced.

Changes in the input signal or the valve position effect, in turn, a change in the actuator stem position, corresponding to the reference variable.

Tight-closing function

The electro-pneumatic actuator is either fully vented or fully pressurized whenever the reference variable exceeds or falls below a certain preset value.

The lower and the upper range value of the input signal are adjusted to a fixed value at the zero adjuster and the potentiometer for span, however, they can be corrected after attachment to the valve.

Valve 3321

The control valve is subject to natural wear, especially at the seat, plug and packing. Depending on the application, the valve needs to be checked regularly to prevent against possible failures. If leakage occurs, this could be caused by a damaged packing.

Change Packing

WARNING! **Risk of injury!**
Make sure before dismantling, that the pipeline is drained and free from media. Also, if necessary, allow the control valve to cool down or warm up to ambient temperature prior to starting any work on the valve.

Caution! On performing any work on the valve body, first shut off the supply pressure, disconnect the supply pressure line and remove the actuator. Removing the valve from the pipeline is recommend.

Note! Always separate the actuator and the valve prior to carrying out repairs!

If the valve leaks at the packing assembly, the packing (6) of the packing assembly needs to be exchanged as follows:

(Cont'd)

2.2tf506815.en

(Cont'd)

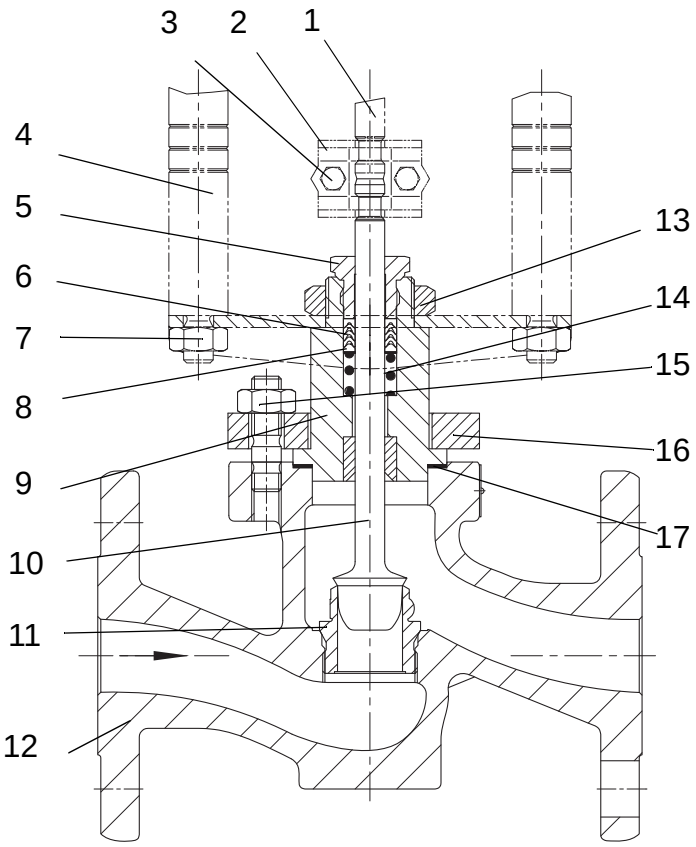

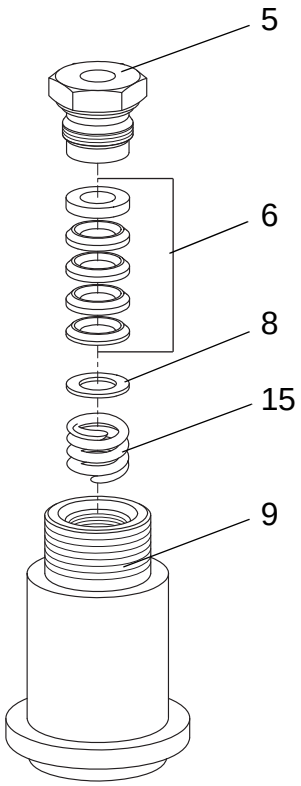

2.2tf506815.en

1 Actuator stem
2 Stem connector
3 Screw
4 Rod-type yoke
5 Threaded bushing
6 V-ring packing
7 Yoke nut
8 Washer
9 Valve bonnet
10 Plug stem with plug
11 Seat
12 Valve body
13 Hexagonal nut
14 Spring
15 Nuts
16 Flange
17 Gasket

(Cont'd)

(Cont'd)

a) Separate the actuator from the valve as described in chapter **Separating the valve from the actuator**. If the actuator stem extends, first apply a pressure which exceeds the lower range value to the actuator (see nameplate).

b) Unscrew the nuts (15) and remove the valve bonnet (9) and flange (16).

c) Check the gasket (17) in the valve body (12) for damage. It is recommended that the gasket is replaced.

d) Screw off the threaded bushing (5) and pull out the plug (10).

e) Pull out the damaged packing (6) using an appropriate tool. Remove the washer (8) and spring (14) and clean the packing chamber.

f) Apply lubricant (see chapter **Spare Parts**, section **Tools**) to the individual parts of the new packing and the plug stem. Insert the plug (10) in the valve bonnet (9).

g) Place the valve bonnet with flange on the valve body and secure with nuts (15). Observe the tightening torques listed in the table.

h) Insert the spring (14) and washer (8) and carefully slide the new packing (6) over the plug stem (10) into the packing chamber. Screw in the threaded bushing (5) and tighten.

i) Follow the assembly instructions found in chapter **Separating the valve from the actuator**.

2.2tf506815.en

Seat thread (mm)	Body nut thread (mm)	Tightening torque (Nm)
M32 × 1.5	-	170
M58 × 1.5	-	500
-	M10	10
-	M12	30

Change Valve Plug

When changing the cone it is recommended also to change the sealings and the sealing box V-ring.

Follow the instructions in chapter **Change packing** but install a new plug instead of the used one. Apply lubricant (see chapter **Spare Parts**, section **Tools**) to the plug stem prior to installation.

Change Valve Seat

a) Remove the actuator as described in chapter **Separating the valve from the actuator**.

b) Unscrew the nuts (15) and remove the valve bonnet (9) and flange (16).

c) Unscrew the valve seat (11) using the appropriate seat tool (see chapter **Spare Parts**, section **Tools**).

d) Apply lubricant (see chapter **Spare Parts**, section **Tools**) to the thread and the sealing cone of the new seat and screw in.

e) Place the valve bonnet (9) with flange (16) on the valve body and secure with nuts (15). Observe the tightening torques!

f) Follow the assembly instructions found in chapter **Separating the valve from the actuator**.

2.2tf506815.en

Actuator 3372 I/P

Separating the Valve From the Actuator

DANGER!

Risk of electroshock!
Make sure before dismantling, that all circuits are shut off and that all wires are disconnected.

WARNING!

Risk of injury!
Make sure before dismantling, that the pipeline is drained and free from media. Also, if necessary, allow the control valve to cool down or warm up to ambient temperature prior to starting any work on the valve.

Note! On dismantling an actuator with **"Actuator stem extends" (NC)** and especially when an actuator has pre-tensions springs, first apply pressure slightly above the lower bench range value (see nameplate on actuator) to the loading pressure connection on the lower diaphragm chamber.

2.2tf506815.en

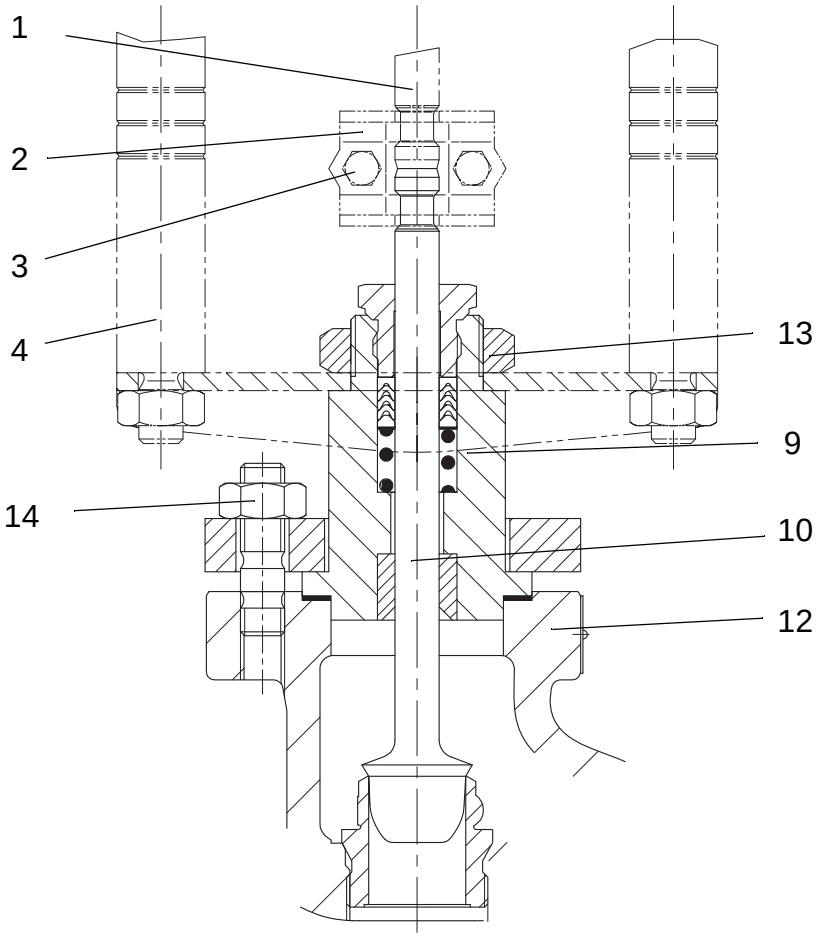

1 Actuator stem
2 Stem connector
3 Screw
4 Rod-type yoke
9 Valve bonnet
10 Plug stem with plug
12 Valve body
13 Hexagonal nut
14 Nuts

(Cont'd)

(Cont'd)

120 cm² Diaphragm

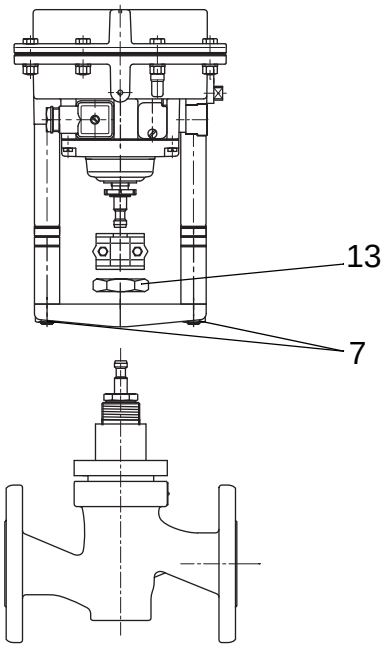

7 Yoke Nut
13 Hexagonal nut

Caution! Do not under any circumstances undo the yoke nuts (7) on the rod-type yoke (4) of actuators with 120 cm² diaphragm areas.

2.2tf506815.en

Disassembly

a) Disconnect all electrical wires and the signal pressure connection from the actuator.

b) Remove screws (3) from the stem connector (2).

c) Remove the hexagonal nut (13) from the valve bonnet (9).

d) Lift the actuator off the valve bonnet (9).

Assembly

a) Slightly retract the actuator stem (1) and place the actuator with its rod-type yoke (4) on the valve bonnet (9). Secure with the nuts (14) and the hexagonal nut (13). Observe a tightening torque of at least 150 Nm for the hexagonal nut (13).

b) **Extend** or **retract** the actuator stem (1) until it touches the plug stem (10).

c) Position the stem connector clamps (2) and fasten the screws (3) tight.

Note! **Always** re-calibrate the zero point when the actuator and the valve have been separated, see chapter **Checking - Adjusting Zero and Span**.

Change Actuator

a) Remove the actuator as described in chapter **Separating the valve from the actuator**.

b) Change actuator.

Stem extends, NC

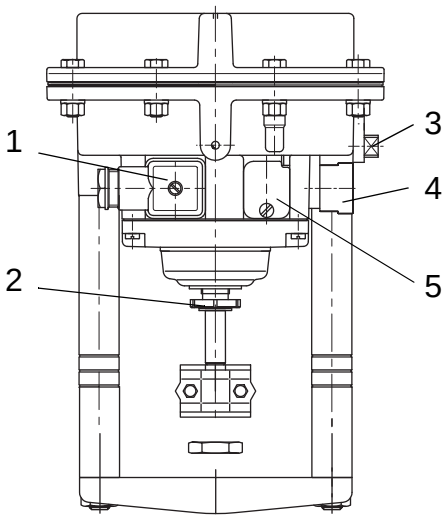

Stem retracts, NO

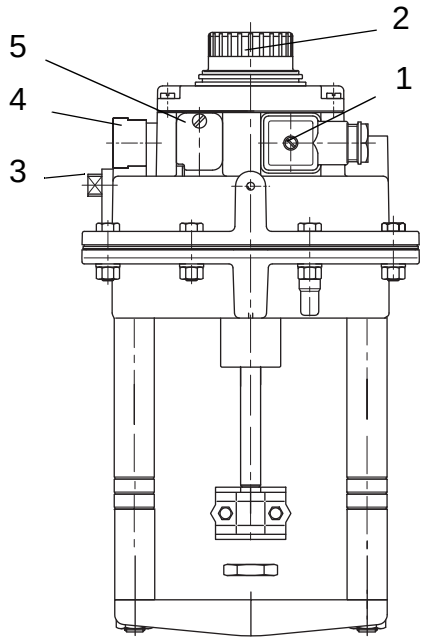

1 Plug connector
2 Zero adjuster
3 Stopper (Pressure gauge)
4 Vent plug
5 Cover plate
(span and tight closing function)

c) **For the electro-pneumatic actuator (NC):**
Apply a pressure of approximately 3 bar to the “Supply” connection and additionally connect a control signal of approximately 10 mA to retract the actuator stem.

For the electro-pneumatic actuator (NO):
If necessary, pressurize the top diaphragm chamber until the plug stem and actuator stem come in contact so that the stem connector can be mounted.

d) Follow the assembly instructions found in chapter **Separating the valve from the actuator**.

2.2tf506815.en

Change Diaphragm and Spare Parts

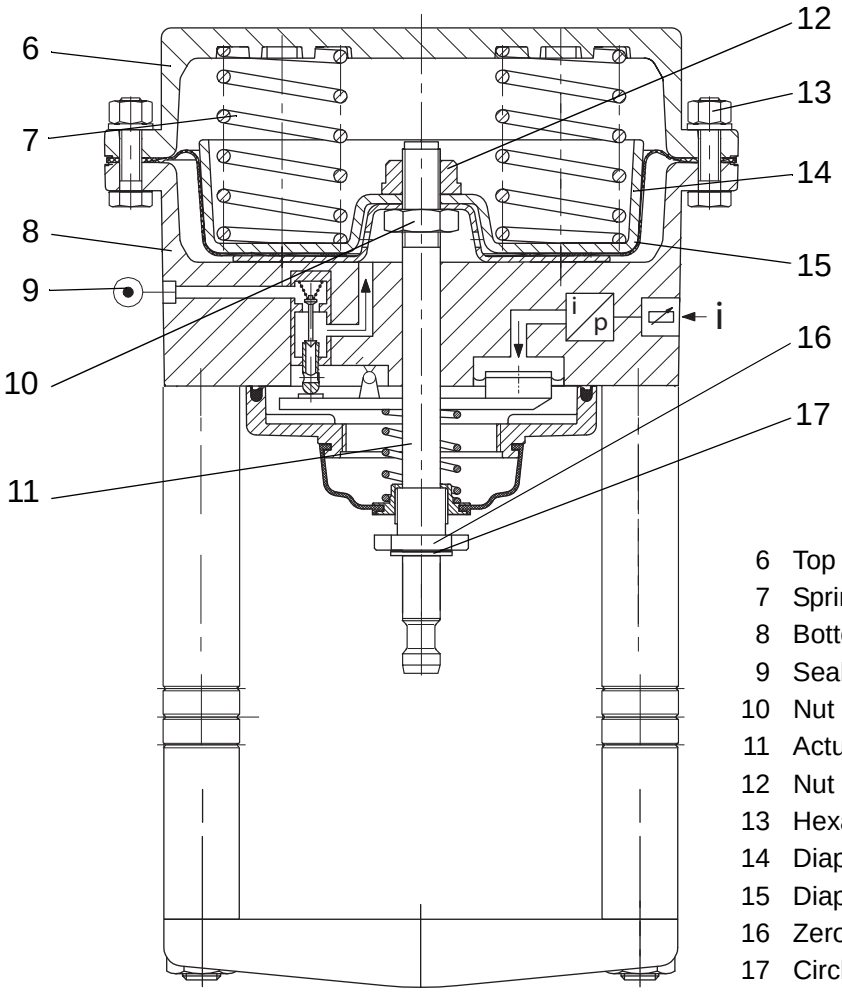

6 Top actuator case
7 Springs
8 Bottom actuator case
9 Seal
10 Nut
11 Actuator stem
12 Nut
13 Hexagonal bolts and nuts
14 Diaphragm plate
15 Diaphragm
16 Zero adjuster
17 Circlip

2.2tf506815.en

(Cont'd)

(Cont'd)

a) Separate the actuator from the valve as described in chapter **Separating the valve from the actuator**.

b) Unscrew the hexagonal bolts and nuts (13) connecting both actuator cases.

WARNING! **Risk of injury!**
Loosen the short bolts first, **then slowly and in a criss-cross pattern the long bolts and nuts until the actuator springs are relieved of tension**.

Caution! Take special care with actuators whose springs have been pre-loaded at the factory, distinguished by the bolts and nuts on the bottom diaphragm case.

c) Lift off the top actuator case (6).

d) Remove the springs (7), (NC version - only).

e) Remove the circlip (17), (NC version - only).

f) Pull the actuator stem (11), diaphragm plate (14) and diaphragm (15) out of the bottom actuator case (8).

g) Remove the nut (12) and pull off the diaphragm plate.

Note! Do not touch the lower nut (10).

h) Change diaphragm (15).

i) Assemble the actuator in reversed order.

Note! Align the top actuator case flanges with the flanges of the bottom actuator case before reattaching the hexagonal bolts and nuts.

2.2tf506815.en

Checking - Adjusting Zero and Span

Electro-pneumatic Actuator Only

Note! Make adjustments on the mounted valve only.

Zero and span are adjusted to determine the starting point and the upper range value of the actuator. When the control signal (reference variable) issued by the controller changes from 4 to 20 mA, the control valve must correspondingly pass through its entire travel range from 0 to 100 %. Zero adjustment is always based on the closed position of the control valve.

	Closed fail-safe position, (NC)	**Open fail-safe position, (NO)**
Zero	4 mA	20 mA
Upper range	20 mA	4 mA

Note! Zero and span of the electro-pneumatic actuator are adjusted to rated travel by the manufacturer. We recommend, however, that you check zero after the actuator has been attached to the valve. Proceed as described below:

a) Connect an ammeter to the control signal input and apply compressed air to the "Supply" input.

b) Loosen the fastening screw and push the cover plate (2) aside.

c) Pull the jumper (3) from the pins to deactivate the tight-dosing function.

Zero is adjusted on the adjuster (1) and the upper range value on the potentiometer for span (4).

Note! Any span adjustment results in a shift of zero. Therefore, the zero point must be readjusted after span adjustment.

2.2tf506815.en

Adjusting Actuators with Fail-Safe Position "Actuator Stem Extends" (NC)

Zero Point (Starting Point)

a) Use an ammeter to adjust the input signal to 4 mA.

b) Turn zero adjuster (1) until the plug stem just begins to move from its rest position.

c) Switch off the input signal and then slowly increase it again. Check if the plug stem begins to move at 4 mA.

d) Correct any deviations via the zero adjuster (1). Turning clockwise causes the valve to leave its rest position earlier, whereas turning counterclockwise delays the valve leaving its rest position.

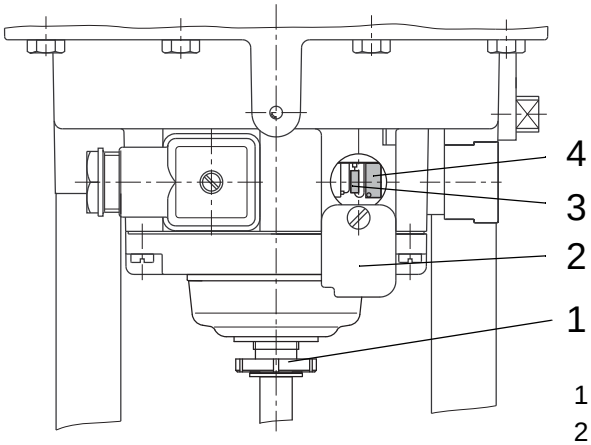

1 Zero adjuster
2 Cover plate
3 Jumper
4 Potentiometer for span

2.2tf506815.en

Upper Range Value

e) After the starting point has been adjusted, use the ammeter to increase the input signal to 20 mA. When reaching the upper range value of 20 mA, the plug stem must have passed through its entire rated travel range of 100 %.

f) Adjust the potentiometer for span (4) until the upper range value is correct. Turning clockwise increases the travel, turning counterclockwise reduces the travel.

g) After correction, switch off the input signal and slowly increase it again. First check the starting point (4 mA), then the upper range value (20 mA).

h) Repeat the correction procedure until both values are correct.

i) Plug jumper (3) on the pins again to activate the tight-closing function.

Adjusting Actuators with Fail-Safe Position "Actuator Stem Retracts" (NO)

Zero Point (Starting Point)

a) Use ammeter to adjust the input signal to 20 mA.

b) Remove the protective cap (5) and turn the zero adjuster (1) until the plug stem just begins to move from its rest position.

c) Increase the input signal and slowly reduce it again to 20 mA. Check if the plug stem begins to move at 20 mA.

d) Correct any deviations via the zero adjuster (1). Turning counter-clockwise causes the valve to move from its rest position with delay, whereas turning clockwise causes the valve to move earlier.

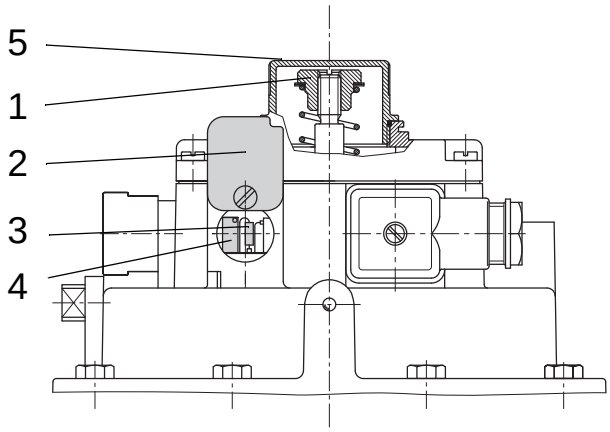

2.2tf506815.en

1 Zero adjuster
2 Cover plate
3 Jumper
4 Potentiometer for span
5 Protective cap

Upper Range Value

e) After the starting point has been adjusted, use the ammeter to adjust the input signal to 4 mA. When reaching the upper range value of 4 mA, the plug stem must have passed through its entire rated travel range of 100 %.

f) Adjust the potentiometer for span (4) until the upper range value is correct. Turning clockwise increases the travel, and turning counterclockwise reduces the travel.

g) After correction, increase the input signal again. First check the starting point (20 mA), then the upper range value (4 mA).

h) Repeat the correction procedure until both values are correct.

i) Put the protective cap (5) back over the zero adjuster.

j) Plug the jumper (3) on the pins again to activate the tight-closing function.

This page intentionally left blank

2.2tf506815.en

Spare Parts

Valve 3321

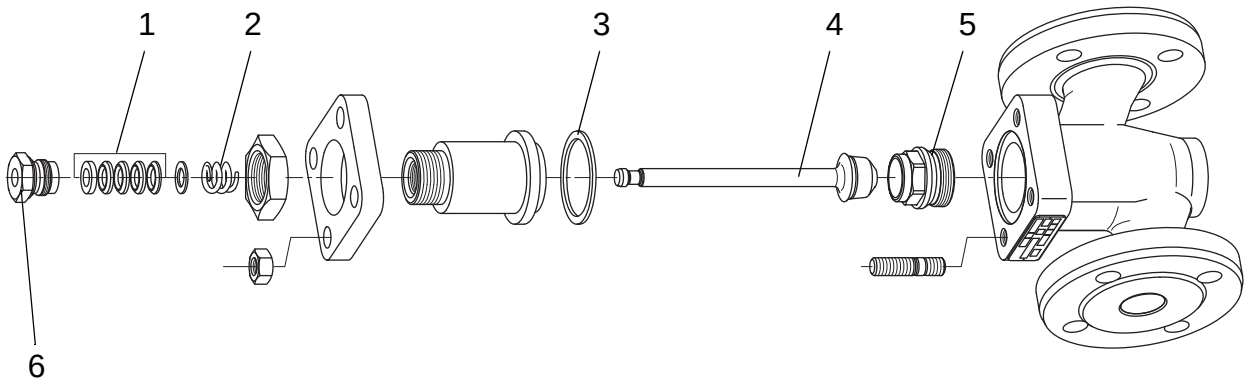

Description Spare part kit, valve	Spare part article No.	Included parts	Pos.	Qty.
DN 15, Kvs 0.25 SS/SS	90511-3052	PTFE-Ring-V-Packing Spring for Packing Gasket Plug Seat	1 2 3 4 5	1 1 1 1 1
DN 15, Kvs 0.63 SS/SS	90511-3053			
DN 15, Kvs 1.6 SS/SS	90511-3054			
DN 15, Kvs 1.6 SS/PTFE	90511-3055			
DN 15, Kvs 4 SS/SS ANSI 1/2”, Cv 4.68 SS/SS	6-990417-52			
DN 15, Kvs 4 SS/PTFE ANSI 1/2”, Cv 4.68 SS/PTFE	6-990417-58			
DN 20, Kvs 2.5 SS/SS	90511-3056			
DN 20, Kvs 2.5 SS/PTFE	90511-3057			
DN 20, Kvs 6.3 SS/SS ANSI 3/4”, Cv 7.37 SS/SS	6-990417-53			
DN 20, Kvs 6.3 SS/PTFE ANSI 3/4”, Cv 7.37 SS/PTFE	6-990417-59			

1.0tf506816.en

Description Spare part kit, valve	Spare part article No.	Included parts	Pos.	Qty.
DN 25, Kvs 4 SS/SS	6-990417-52	PTFE-Ring-V-Packing Spring for Packing Gasket Plug Seat	1 2 3 4 5	1 1 1 1 1
DN 25, Kvs 4 SS/PTFE	6-990417-58			
DN 25, Kvs 10 SS/SS ANSI 1”, Cv 11.7 SS/SS	6-990417-54			
DN 25, Kvs 10 SS/PTFE ANSI 1”, Cv 11.7 SS/PTFE	6-990417-60			
DN 32, Kvs 6.3 SS/SS	90511-3058			
DN 32, Kvs 6.3 SS/PTFE	90511-3059			
DN 32, Kvs 16 SS/SS	6-990417-55			
DN 32, Kvs 16 SS/PTFE	6-990417-61			
DN 40, Kvs 10 SS/SS	90511-3060			
DN 40, Kvs 10 SS/PTFE	90511-3061			
DN 40, Kvs 25 SS/SS ANSI 1 1/2”, Cv 29.25 SS/SS	6-990417-56			
DN 40, Kvs 25 SS/PTFE ANSI 1 1/2”, Cv 29.25 SS/PTFE	6-990417-62			
DN 50, Kvs 16 SS/SS ANSI 2”, Cv 18.7 SS/SS	6-990417-55			
DN 50, Kvs 16 SS/PTFE	6-990417-61			
DN 50, Kvs 35 SS/SS ANSI 2”, Cv 40.95 SS/SS	6-990417-57			
DN 50, Kvs 35 SS/PTFE ANSI 2”, Cv 40.95 SS/PTFE	6-990417-63			
DN 15 - DN50	90510-4809	Threaded bushing	6	1

1.0tf506816.en

Actuator 3372 I/P

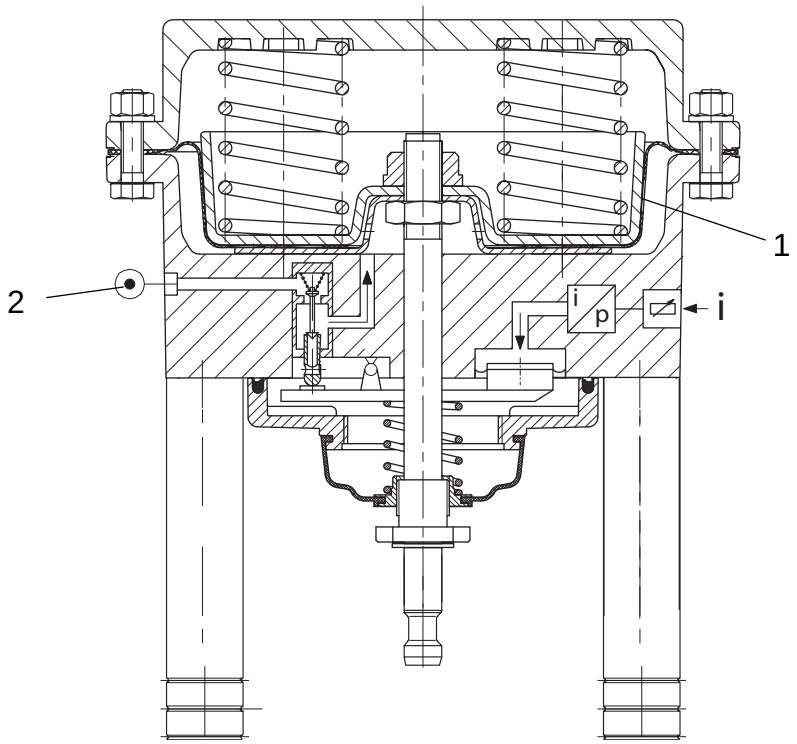

1.0tf506816.en

Description Spare part kit, actuator	Spare part article No.	Included parts	Pos.	Qty.
120 cm^2	6-990418-58	Diaphragm Seal	1 2	1 1

Description Actuator, complete unit	Spare part article No.	Included parts	Pos.	Qty.
120 cm^2, NC	6-990418-59	-	-	1
120 cm^2, NO	6-990418-60	-	-	1

Tools

Seat tool

Description Seat tool, complete	Spare part article No.	Included parts	Pos.	Qty.
DN 15-25	90519-4298	Seat tool, complete	-	1
DN 32-50	90512-6978	Nut Supporting flange Socket	-	1 1 1

Torque wrench

Description Torque wrench	Spare part article No.	Included parts	Pos.	Qty.
10 - 100 Nm	90512-6983	-	-	1
50 - 300 Nm	90510-4303	-	-	1
Torque multiplyer, IP30, 3000 Nm	90510-4302	-	-	1

1.0tf506816.en

Lubrication

Description Lubrication	Spare part article No.	Included parts	Pos.	Qty.
Greese	90512-7283	-	-	1

Tetra Pak

Maintenance & Spare Parts

Regulating Valve

(Samson)
3347 Barstock

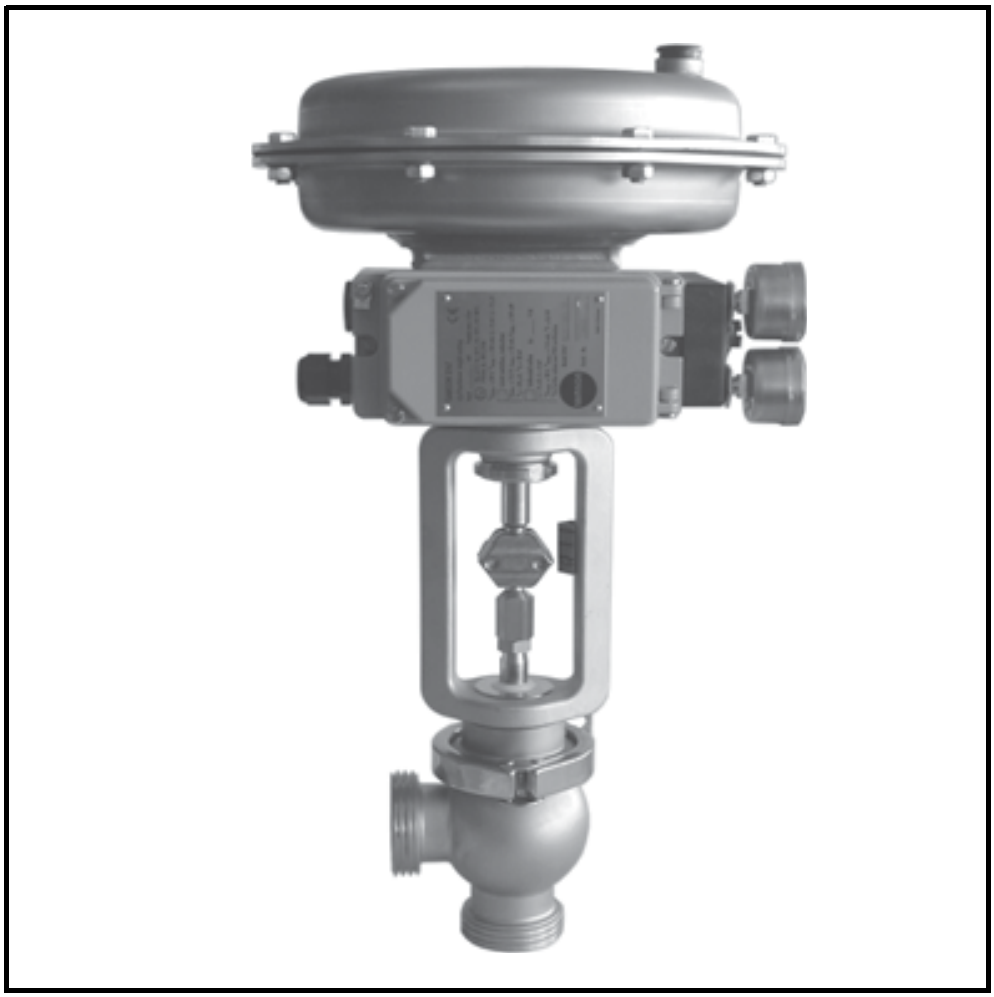

1.0 1224799-0101.fro

Tetra Pak

Doc No. 1224799-0101

Regulating Valve

3347 Barstock

Article No.	Lin.	PN	DN	Kvs	Valve	Seat/plug	Actuator type
90511-6364	No	16	15	1.6	3347	SS/SS	3277, 3730-1, NC
90513-3812	No	16	25	4	3347	SS/SS	3372, 3730-1, NC
90513-3813	No	16	25	6.3	3347	SS/SS	3372, 3730-1, NC
90517-3322	No	16	25	10	3347	SS/SS	3372, 3730-2, NO
90511-5941	No	16	40	4	3347	SS/SS	3372, NO
6-31801-9619-1	No	16	40	10	3347	SS/SS	3372, NO
6-31801-9816-1	No	16	40	10	3347	SS/SS	3372, NC
90510-4678	No	16	40	10	3347	SS/SS	3372, NO
90513-4530	No	16	40	10	3347	SS/SS	3372, NC
90512-8717	No	16	40	16	3347	SS/SS	3277, 3730-1, NO
6-31801-9619-2	No	16	40	16	3347	SS/SS	3372, NO
6-31801-9816-2	No	16	40	16	3347	SS/SS	3372, NC
90510-4679	No	16	40	16	3347	SS/SS	3372, NO
90523-1145	No	16	40	16	3347	SS/SS	3372-3725, NC
90510-2635	No	16	50	10	3347-7	SS/SS	3277, 3730-1, NO
90510-4680	No	16	50	25	3347	SS/SS	3372, NO
6-31801-9619-3	No	16	50	25	3347	SS/SS	3372, NO
6-31801-9816-3	No	16	50	25	3347	SS/SS	3372, NC
90510-4681	No	16	50	35	3347	SS/SS	3372, NO
6-31801-9619-4	No	16	50	35	3347	SS/SS	3372, NO
6-31801-9816-4	No	16	50	35	3347	SS/SS	3372, NC
90511-6372	No	16	50	40	3347	SS/SS	3277, 3730-1, NO
90523-1111	No	16	50	40	3347	SS/SS	3372-3725, NC
90510-9827	No	16	65	60	3347-7	SS/SS	3277-3730, NO
90511-6373	No	16	65	60	3347	SS/SS	3277, 3730-1, NO

1.0 1224799-0101.fro

Version 04 Issue 2016-07

Doc No. 1224799-0101

Tetra Pak

Tetra Pak Processing Systems AB

Article No.	Lin.	PN	DN	Kvs	Valve	Seat/plug	Actuator type
90513-3802	No	16	65	60	3347	SS/SS	3372, 3730-1, NO
90513-4529	No	16	65	60	3347	SS/SS	3372, NC
90523-1112	No	16	65	60	3347	SS/SS	3372-3725, NC
90512-8091	No	40	25	0.63%	3347-7	SS/SS	3277, 3730-1, NO
90512-8092	No	40	25	1%	3347-7	SS/SS	3277, 3730-1, NO
90503-6723	No	40	50	1%	3347-7	SS/SS	3277-3730, 4708-1022, NO
90503-6724	No	40	25	1.6%	3347-7	SS/SS	3277-3730, 4708-1022, NO
90512-8093	No	40	25	1.6%	3347-7	SS/SS	3277, 3730-1, NO
90512-8094	No	40	25	2.5%	3347-7	SS/SS	3277, 3730-1, NO
90503-3972	No	40	25	4%	3347-7	SS/SS	3277-3730, 4708-1022, NO
90512-8095	No	40	25	4%	3347-7	SS/SS	3277, 3730-1, NO
90512-8096	No	40	40	6.3%	3347-7	SS/SS	3277, 3730-1, NO
90512-8097	No	40	40	10%	3347-7	SS/SS	3277, 3730-1, NO
90512-8098	No	40	50	16%	3347-7	SS/SS	3277, 3730-1, NO
90521-2809	No	40	25	0.63%	3347-7	SS/SS	3277, 3730-1, NC
90521-2810	No	40	25	1%	3347-7	SS/SS	3277, 3730-1, NC
90521-2811	No	40	25	1.6%	3347-7	SS/SS	3277, 3730-1, NC
90521-2812	No	40	25	2.5%	3347-7	SS/SS	3277, 3730-1, NC
90521-2813	No	40	25	4%	3347-7	SS/SS	3277, 3730-1, NC
90521-2814	No	40	40	6.3%	3347-7	SS/SS	3277, 3730-1, NC
90521-2815	No	40	40	10%	3347-7	SS/SS	3277, 3730-1, NC
90521-2816	No	40	50	16%	3347-7	SS/SS	3277, 3730-1, NC
6-31816-0060-1	Yes	16	25	4	3347-7	SS/SS	3277-3730, NC
6-31816-0060-2	Yes	16	25	6.3	3347-7	SS/SS	3277-3730, NC
6-31816-0060-3	Yes	16	40	10	3347-7	SS/SS	3277-3730, NC
6-31816-0060-4	Yes	16	40	16	3347-7	SS/SS	3277-3730, NC
6-31816-0060-5	Yes	16	50	25	3347-7	SS/SS	3277-3730, NC
6-31816-0060-6	Yes	16	50	40	3347-7	SS/SS	3277-3730, NC
90503-6244	Yes	16	65	60	3347-7	SS/SS	3277-3730, NC

1.0 1224799-0101.fro

Article No.	Lin.	PN	DN	Kvs	Valve	Seat/plug	Actuator type
90511-6374	Yes	16	80	80	3347	SS/SS	3277, 3730-1, NO
90503-6245	Yes	16	80	80	3347-7	SS/SS	3277-3730, NC
90503-6246	Yes	16	100	100	3347-7	SS/SS	3277-3730, NC

NC=Normally closed
NO=Normally open
Lin=Linear
SS=Stainless steel

1.0 1224799-0101.fro

Tetra Pak

Maintenance 1
General 1
Valve 1
Actuator 2
Valve 3347 Barstock 3
Change Sealing Parts and Plug 3
Actuator 3277 7
Separating the Valve from the Actuator 8
Assembly and Adjustment 9
Replacing the Diaphragm and Stem Seal 11
Actuator 3372 I/P 14
Separating the Valve from the Actuator 14
Change Actuator 16
Change Diaphragm and Spare Parts 17
Checking - Adjusting Zero and Span 19
Adjusting Actuators with
. . . . . .Fail-Safe Position "Actuator Stem Extends" (NC) 20
Adjusting Actuators with
. . . . . Fail-Safe Position "Actuator Stem Retracts" (NO) 21
Positioner 22
Change Positioner 22
Zero Presetting/Calibration 23
Spare Parts 34
Valve 3347 Barstock 34
PN16 34
PN40 35
Linear PN16 36
Actuator 3277 37
Actuator 3372 I/P 39
Positioner 3725, 3730 40
Tools 41

1.0 1224799-0101.TOC

This page intentionally left blank

Maintenance

General

Valve

The Type 3347 Hygienic Angle Valve is based on the modular principle and can be combined with pneumatic as well as electric actuators.

The process medium flows through the valve in the direction indicated by the arrow, against the closing direction of the plug. The position of the plug is changed by the signal pressure acting on the actuator diaphragm.

The stem connector connects the plug stem with attached plug and actuator stem. A PTFE bushing is used to seal the actuator stem. Potential leakage can be visually monitored through the lateral inspection bores.

An additional bushing guides the plug stem towards the exterior. An optional steam or sterile fluid line connection for sterilization of the plug stem is available.

The bonnet is fixed to the body by means of a clamp connection, allowing the complete bonnet to be separated from the body with just a few movements of the hand.

2.2tf506821.en

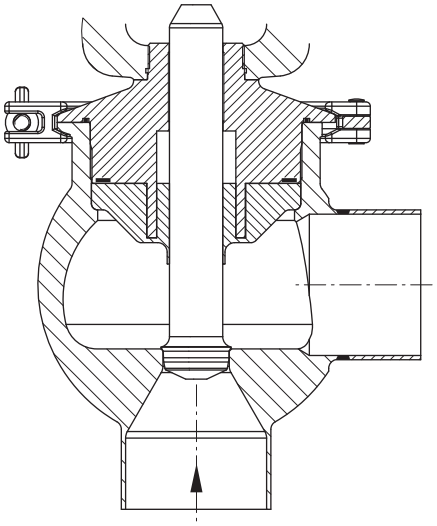

Barstock cast body
with threaded connections

Actuator

The actuators complement the valves to form pneumatic or electro-pneumatic control valves. The actuators basically consist of two diaphragm cases, a rolling diaphragm and springs.

The electro-pneumatic actuators are additionally equipped with an I/P converter and a pneumatic control system. For actuators with fail-safe position “actuator stem extends”, the converter and the control system are mounted in the lower diaphragm case, and for versions “actuator stem retracts”, in the upper diaphragm case.

The signal pressure creates a force which acts on the diaphragm. The springs installed in the diaphragm chamber oppose this force, thus ensuring compensation. When the signal pressure fails, the springs installed either in the top or bottom diaphragm chamber determine the actuator’s **fail-safe position**.

Actuator stem extends
NC (Normally Closed) = FA

Upon signal pressure failure, the actuator stem extends and closes the valve (globe valve).

Actuator stem retracts
NO (Normally Open) = FE

Upon signal pressure failure, the actuator stem retracts and opens the valve (globe valve).

2.2tf506821.en

Electro-pneumatic actuators

The electric control signal issued by the controller is transmitted as reference variable ranging from 4 to 20 mA to the I/P converter where it is converted into a proportional pressure signal. The pressure signal creates a force that acts on the measuring diaphragm. This force is then compared with the force of the measuring spring. The movement of the measuring diaphragm is transmitted via the lever to the force switch, and finally a corresponding signal pressure is produced.

Changes in the input signal or the valve position effect, in turn, a change in the actuator stem position, corresponding to the reference variable.

Tight-closing function

The electro-pneumatic actuator is either fully vented or fully pressurized whenever the reference variable exceeds or falls below a certain preset value.

The lower and the upper range value of the input signal are adjusted to a fixed value at the zero adjuster and the potentiometer for span, however, they can be corrected after attachment to the valve.

Valve 3347 Barstock

The control valve is subject to natural wear, especially at the seat, plug and packing. Depending on the application, the valve needs to be checked regularly to prevent against possible failures. If leakage occurs, this could be caused by a damaged packing.

Change Sealing Parts and Plug

WARNING!

Risk of injury!
Make sure before dismantling, that the pipeline is drained and free from media. Also, if necessary, allow the control valve to cool down or warm up to ambient temperature prior to starting any work on the valve.

Caution! On performing any work on the valve body, first shut off the supply pressure, disconnect the supply pressure line and remove the actuator. Removing the valve from the pipeline is recommended.

Note! Always separate the actuator and the valve prior to carrying out repairs!

If the valve leaks at the packing assembly, the wiper (8) or stem seal (11) needs to be exchanged as follows:

(Cont'd)

2.2tf506821.en

(Cont'd)

Valve with 3277 Actuator

Valve with 3372 I/P Actuator

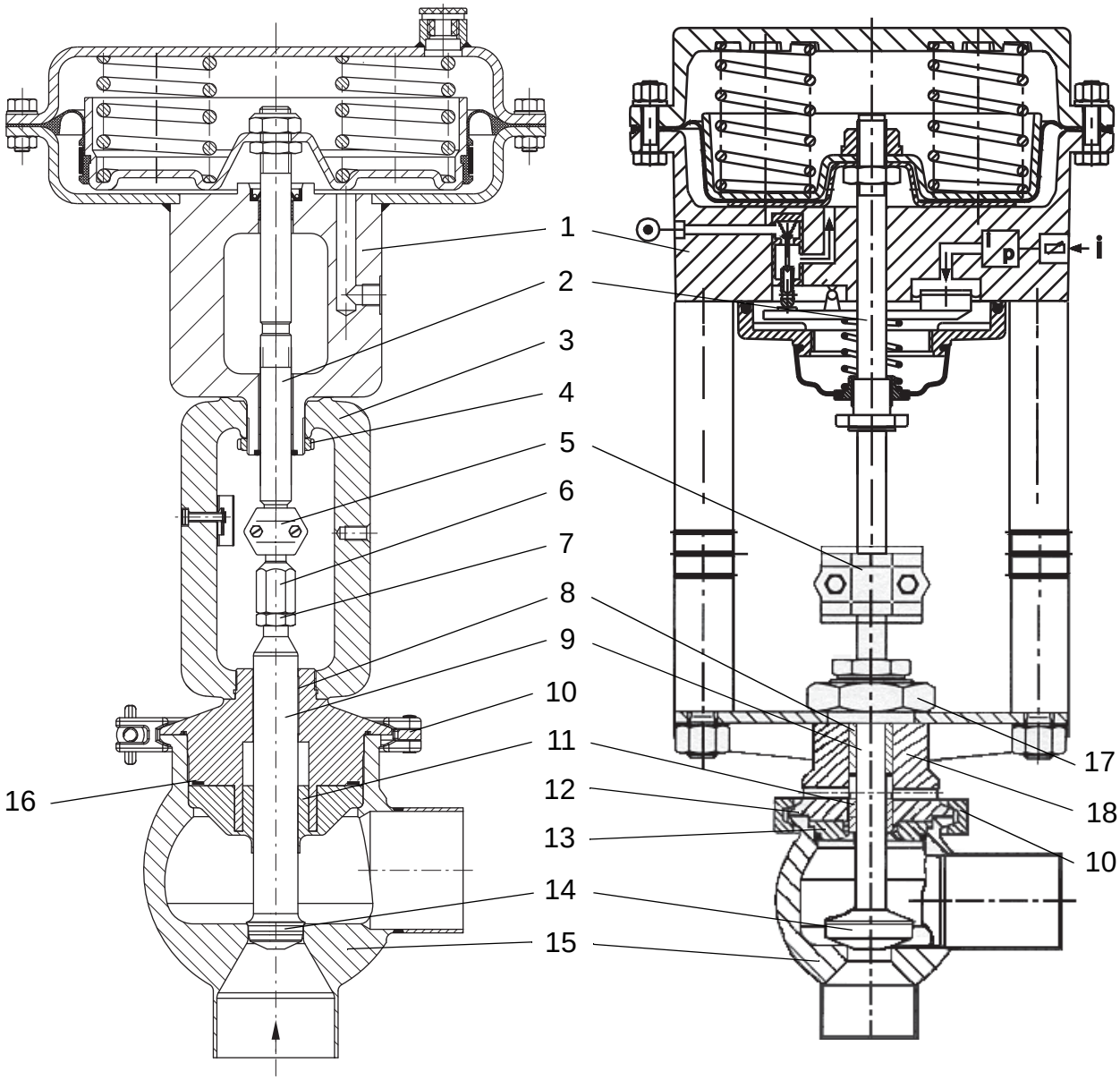

2.2tf506821.en

1	Actuator	10	Clamp
2	Actuator stem	11	Stem seal
3	Valve bonnet with yoke	12	Body gasket
4	Annular nut	13	Centering ring
5	Stem connector	14	Plug
6	Stem connector nut	15	Valve body
7	Lock nut	16	Compensation ring
8	Wiper	17	Hexagonal nut
9	Plug stem	18	Valve bonnet

(Cont'd)

(Cont'd)

For Valve with 3277 Actuator

a) Remove the actuator as described in chapter **Separating the valve from the actuator**. If the actuator stem extends, first apply a pressure which exceeds the lower range value to the actuator (see nameplate).

b) Remove nuts (6 and 7).

c) Take off the clamp (10) and carefully remove the valve bonnet (3) together with plug (14).

d) Pull plug (14) out of the valve bonnet (3), taking particular care to prevent the stem seal (11) from getting damaged.

e) Push out damaged parts such as wiper (8) and stem seal (11) using an appropriate tool. Clean the packing chamber.

f) Check that the surface of the plug stem (9) is highly polished and free of score marks. If the stem surface is not flawless, it must be repolished to ensure that the stem seal cannot get damaged.

g) Apply lubricant (see chapter **Spare Parts**, section **Tools**) to each new part and the plug stem (9).

h) If the stem seal (11) is replaced, put the new stem seal over the plug stem (9) at first in the opposite direction with lip towards the threaded end to stretch the lip of the new stem seal slightly. Carefully pull off the stem seal again.

i) Carefully slide the stem seal (11), centering it over the threaded end of the plug stem (9). The stem seal must fit tightly, but slide easily over the plug stem.

j) Insert the plug stem (9) with stem seal (11) into the valve bonnet (3). Slide the wiper (8) over the plug stem into the valve bonnet.

k) Carefully place the valve bonnet (3) onto the valve body (15). Carefully lubricate the clamp (10) as well as the flange of the valve bonnet and valve body.

l) Place the clamp (10) in position and screw tight the clamp screw. Hit the clamp lightly with a plastic hammer and tighten the clamp screw again. Repeat this procedure several times to tighten the clamp as far as it will go and a leakproof body is achieved.

m) Thread the lock nut (7) and stem connector nut (6) onto the plug stem (9).

n) Follow the assembly instructions found in chapter **Separating the valve from the actuator.**

(Cont'd)

2.2tf506821.en

(Cont'd)

For Valve with 3372 I/P Actuator

a) Remove the actuator as described in chapter **Separating the valve from the actuator**. If the actuator stem extends, first apply a pressure which exceeds the lower range value to the actuator (see nameplate).

b) Take off the clamp (10) and carefully remove the valve bonnet (18) together with plug (14) and centering ring (13).

c) Check the gasket (12) in the valve body (15) for damage. It is recommended that the gasket is replaced.

d) Pull plug (14) out of the valve bonnet (3), taking particular care to prevent the stem seal (11) from getting damaged.

e) Push out damaged parts such as wiper (8) and stem seal (11) using an appropriate tool. Clean the packing chamber.

f) Check that the surface of the plug stem (9) is highly polished and free of score marks. If the stem surface is not flawless, it must be repolished to ensure that the stem seal cannot get damaged.

g) Apply lubricant (see chapter **Spare Parts**, section **Tools**) to each new part and the plug stem (9).

h) If the stem seal (11) is replaced, put the new stem seal over the plug stem (9) at first in the opposite direction with lip towards the threaded end to stretch the lip of the new stem seal slightly. Carefully pull off the stem seal again.

i) Carefully slide the stem seal (11), centering it over the threaded end of the plug stem (9). The stem seal must fit tightly, but slide easily over the plug stem.

j) Insert the plug stem (9) with stem seal (11) and centering ring (13) into the valve bonnet (18). Slide the wiper (8) over the plug stem into the valve bonnet.

k) Carefully place the valve bonnet (18) onto the valve body (15). Carefully lubricate the clamp (10) as well as the flange of the valve bonnet and valve body.

l) Place the clamp (10) in position and screw tight the clamp screw. Hit the clamp lightly with a plastic hammer and tighten the clamp screw again. Repeat this procedure several times to tighten the clamp as far as it will go and a leakproof body is achieved.

m) Follow the assembly instructions found in chapter **Separating the valve from the actuator.**

2.2tf506821.en

Actuator 3277

Note! The pneumatic actuators are designed for a maximum supply pressure of 6 bar. To prevent the actuator from being damaged, do not let the supply pressure exceed the upper spring range value by more than 3 bar when the actuator is used for flow-switching service (on-off valve) with the fail-safe position "**Actuator stem retracts**"**(NO)**. Label actuators that have a reduced supply pressure with a sticker "max. supply pressure limited to … bar".

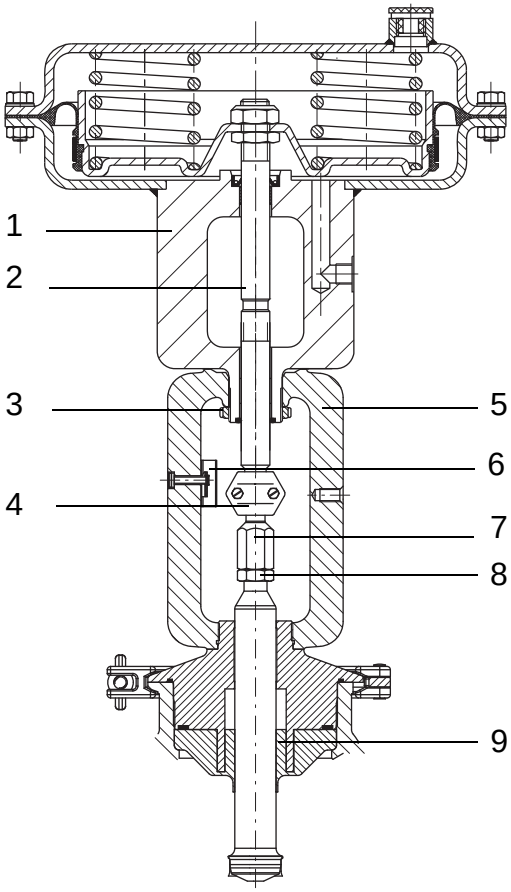

1 Actuator
2 Actuator stem
3 Annular nut
4 Stem connector
5 Valve bonnet
6 Travel indicator scale
7 Stem connector nut
8 Lock nut
9 Stem seal

2.2tf506821.en

Separating the Valve From the Actuator

Note! When disassembling actuators with fail-safe action "**Actuator stem extends" (NC)** and particularly versions with pretensioned springs, **apply a pressure slightly higher than the lower bench range value (see actuator nameplate) to the bottom signal pressure connection before unscrewing the annular nut (3)**.

Caution! Actuators with springs that have already been pretensioned by the manufacturer without attachment to a valve are marked by an appropriate label. In addition, such actuators can be identified by three bolts and nuts protruding from the bottom diaphragm case. These bolts and nuts allow you to evenly relieve the compression when disassembling the actuator.

a) Remove stem connector (4) and unscrew annular nut (3).To remove the annular nut (3), apply a pressure slightly higher than the lower bench range value (see actuator nameplate) before disassembling actuators with fail-safe action "**Actuator stem extends**" **(NC)** and particularly actuator versions with pretensioned springs.

b) Lift actuator (1) from the valve bonnet (5).

2.2tf506821.en

Assembly and Adjustment

If the valve and actuator have not been preassembled by the manufacturer, or if the original actuator is replaced by a different actuator size or model, proceed as follows to assemble the valve and actuator:

a) Loosen lock nut (8) and stem connector nut (7) from the valve. Firmly press the plug with the plug stem into the seat ring. Turn stem connector nut and lock nut downward.

b) Remove clamps of the stem connector (4) and annular nut (3) from the actuator (1). Push the annular nut over the plug stem.

c) Place the actuator on the valve bonnet (5) and screw tight with the annular nut (3).

d) Read bench range (or range with pretensioned springs) and fail-safe action from the nameplate of the actuator (e.g. 0.2 to 1 bar and “Actuator stem extends”).

Note! The operating mode (fail-safe action) “**Actuator stem extends**” **(NC)** or **“Actuator stem retracts” (NO)** is indicated on the nameplate by the appropriate symbol on the actuator.

The lower bench range value (0.2 bar) corresponds to the lower signal pressure range to be adjusted; the upper bench range value (1 bar) corresponds to the upper signal pressure range.

2.2tf506821.en

In actuator version “**Actuator stem extends**” **(NC)**, apply a pressure corresponding to the lower bench range value (e.g. 0.2 bar) to the signal pressure connection on the bottom diaphragm case. In actuator version **“Actuator stem retracts” (NO)**, apply a pressure corresponding to the upper bench range value (e.g.1 bar) to the connection on the top diaphragm case.

Note! Make sure on assembling the valve that the stem seal (9) does not get damaged.The maximum possible travel of the actuator may not exceed the maximum permissible valve travel (see adhesive label on the yoke).

e) Turn the stem connector nut (7) by hand until it touches the actuator stem (2). Turn it another quarter turn and secure position with the lock nut (8).

f) Position clamps of the stem connector (4) and fasten. Align travel indicator scale (6) with tip of the stem connector; for actuators with **“Actuator stem extends” (NC)** align it with lower marking (valve closed) and for actuators with “**Actuator stem retracts**” **(NO)** align it with top marking (valve open).

Note! **Always** re-calibrate the zero point when the actuator and the valve have been separated, see chapter **Zero Presetting/Calibration**.

(Cont'd)

(Cont'd)

Adjustments

Option to pretension of the springs for actuator version "Actuator stem extends".

To achieve a greater thrust, the springs of actuators (350 and 700 cm^2) can be pretensioned by up to 25% of their travel or their bench range.

Example: If, with a bench range of 0.2 to 1 bar, the springs are to be pretensioned by 0.1 bar, for example, the bench range is shifted by 0.1 bar, resulting in a new bench range of 0.3 to 1.1 bar (0.1 bar corresponds to a compression of 12.5%). When adjusting the valve, a signal pressure of 0.3 bar is to be set as the lower signal pressure range. The new bench range of 0.3 to 1.1 bar must be marked on the nameplate as bench range with pretensioned springs.

Valve and actuator that have different rated travels.

Note! Valves that have a smaller travel than that of the actuator must always use pretensioned springs.

Caution! Actuators with springs that have already been pretensioned by the manufacturer without attachment to a valve are marked by an appropriate label. In addition, such actuators can be identified by three bolts and nuts protruding from the bottom diaphragm case.

2.2tf506821.en

Replacing the Diaphragm and Stem Seal

Remove the actuator as described in chapter **Separating the valve from the actuator**.

Caution! To disassemble an actuator with preloaded actuator springs (recognizable by the long bolts on the diaphragm chambers), always undo the short bolts first and then unthread the long bolts slowly and evenly until the actuator springs are fully decompressed.

Note! Actuators with 700 cm² (travel = 30 mm) that are mounted to valves with 15 mm travel, are preloaded by approximately 75% on mounting them to the valve.The signal pressure range is recorded on the nameplate when the actuators have been preloaded on mounting them to the valve.

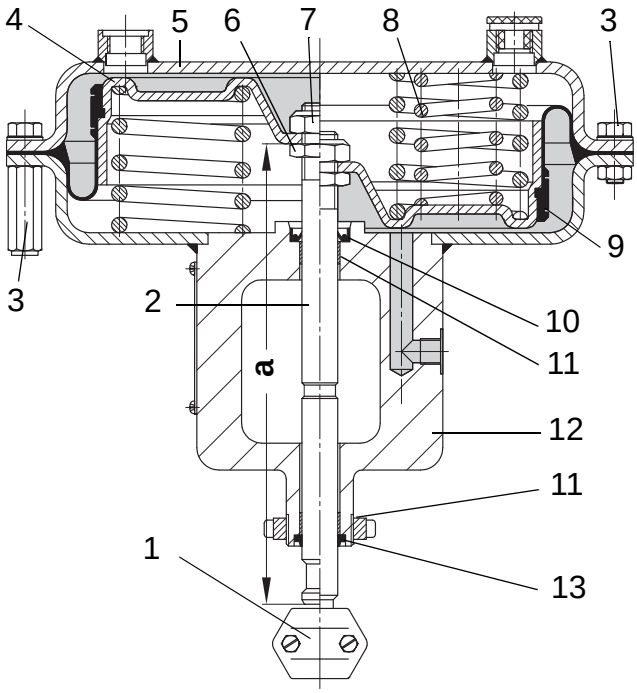

"Actuator stem retracts" / "Actuator stem extends"

Dimension **a**
See **Caution!** on next page.

120 cm² (15 mm travel) = 188.5 mm
120 cm² (20 mm travel) = 185.5 mm
350 cm² = 209 mm
700 cm² = 246 mm

1 Stem connector
2 Actuator stem
3 Nuts and bolts
4 Diaphragm plate
5 Top diaphragm case
6 Nut
7 Nut
8 Springs
9 Diaphragm
10 Stem seal
11 Dry bearing
12 Yoke with bottom diaphragm case
13 Stripper

2.2tf506821.en

Diaphragm

a) Unthread nuts and remove the bolts (3) from the diaphragm cases.

WARNING!

Risk of injury!
Loosen the short bolts first, **then slowly and in a criss-cross pattern the long bolts and nuts until the actuator springs are relieved of tension**.

b) Lift off the top diaphragm case (5) and remove the springs (8) (NC-version).

c) Pull the actuator stem (2) with diaphragm plate (4) and diaphragm (9) out of the yoke (12).

d) Unscrew nut (7), while holding the nut (6) stationary or clamping the actuator stem with a suitable tool.

Caution! Proceed carefully to avoid damaging the seals of the actuator stem.

Caution! Do not loosen the nut (6) on the actuator stem. It is painted over to protect it. If, however, it has been loosened, it is essential that the dimension **a** measured from the **top of the nut** to the **bottom of the actuator stem** is kept.

e) Remove the hose clamp and pull it together with the diaphragm (9) off the diaphragm plate (4).

f) Stretch the new diaphragm onto the diaphragm plate. Fit the hose clamp evenly into the groove intended for it and tighten.

g) Apply lubricant (see chapter **Spare Parts**, section **Tools**) to the sealing places on the actuator stem.

h) Insert the springs (8) and slide the yoke with bottom diaphragm case over the actuator stem.

i) Screw tight the nuts and bolts (3) of the diaphragm cases.

2.2tf506821.en

Stem Seal

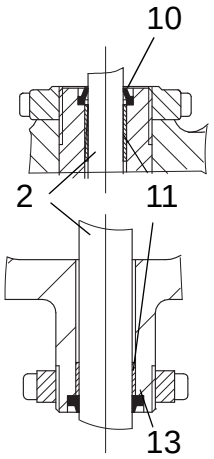

2 Actuator stem
10 Stem seal
11 Dry bearing
13 Stripper

a) Unthread nuts and remove the bolts (3) from the diaphragm cases.

b) Lift off the top diaphragm case (5) and remove the springs (8).

c) Pull the actuator stem (2) with diaphragm plate (4) and diaphragm (9) out of the yoke (12).

d) Coat the new stem seal (10) with lubricant (see chapter **Spare Parts**, section **Tools**) and insert it.

e) If necessary, replace the dry bearing (11) and stripper (13) with new ones as well.

f) Insert the springs (8) and slide the yoke with bottom diaphragm case over the actuator stem.

g) Screw tight the nuts and bolts (3) of the diaphragm cases.

2.2tf506821.en

Actuator 3372 I/P

Separating the Valve from the Actuator

DANGER!

Risk of electroshock!
Make sure before dismantling, that all circuits are shut off and that all wires are disconnected.

WARNING!

Risk of injury!
Make sure before dismantling, that the pipeline is drained and free from media. Also, if necessary, allow the control valve to cool down or warm up to ambient temperature prior to starting any work on the valve.

Note! On dismantling an actuator with **“Actuator stem extends” (NC)** and especially when an actuator has pretensioned springs, first apply pressure slightly above the lower bench range value (see nameplate on actuator) to the loading pressure connection on the lower diaphragm chamber.

2.2tf506821.en

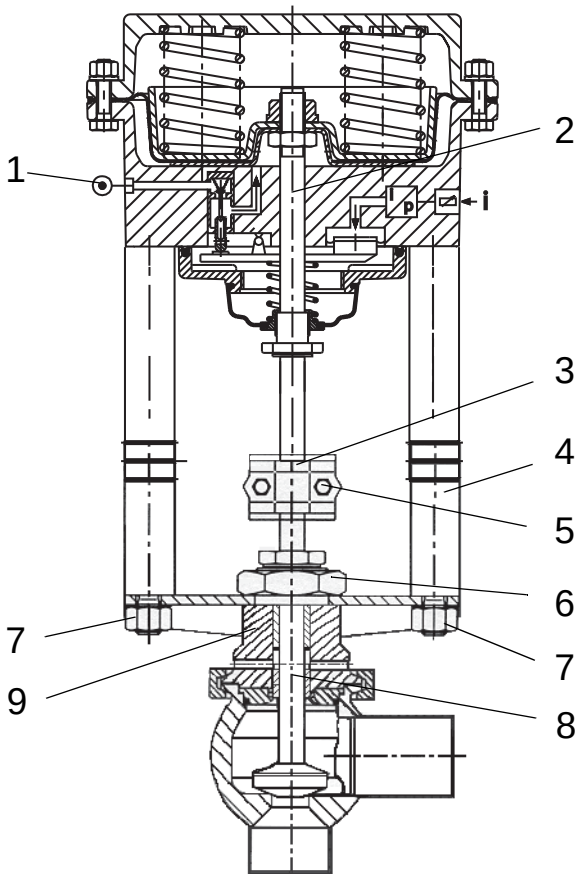

1 Signal pressure connection
2 Actuator stem
3 Stem connector
4 Rod-type yoke
5 Screw
6 Hexagonal nut
7 Yoke nuts
8 Plug stem
9 Valve bonnet

2.2tf506821.en

120 cm² Diaphragm

Caution! Do not under any circumstances undo the yoke nuts (7) on the rod-type yoke (4) of actuators with 120 cm² diaphragm areas.

Disassembly

a) Disconnect all electrical wires and the signal pressure connection from the actuator.

b) Remove screws (5) from the stem connector (3).

c) Remove the hexagonal nut (6) from the valve bonnet (9).

d) Lift the actuator off the valve bonnet (9).

Assembly

a) Slightly retract the actuator stem (2) and place the actuator with its rod-type yoke (4) on the valve bonnet (9). Secure with the hexagonal nut (6). Observe a tightening torque of at least 150 Nm for the hexagonal nut (6).

b) **Extend** or **retract** the actuator stem (2) until it touches the plug stem (8).

c) Position the stem connector clamps (3) and fasten the screws (5) tight.

Note! **Always** re-calibrate the zero point when the actuator and the valve have been separated, see chapter **Checking - Adjusting Zero and Span**.

Change Actuator

a) Remove the actuator as described in chapter **Separating the valve from the actuator.**

b) Change actuator.

Stem extends, NC

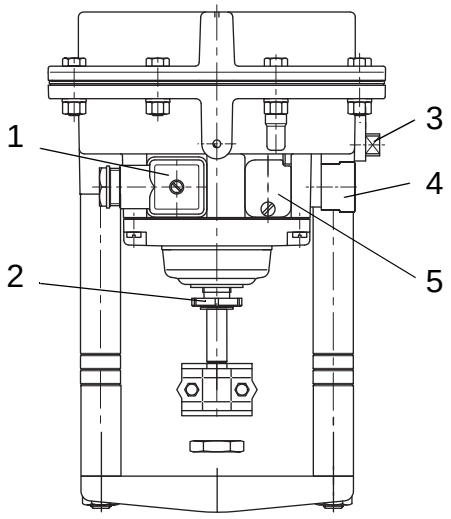

Stem retracts, NO

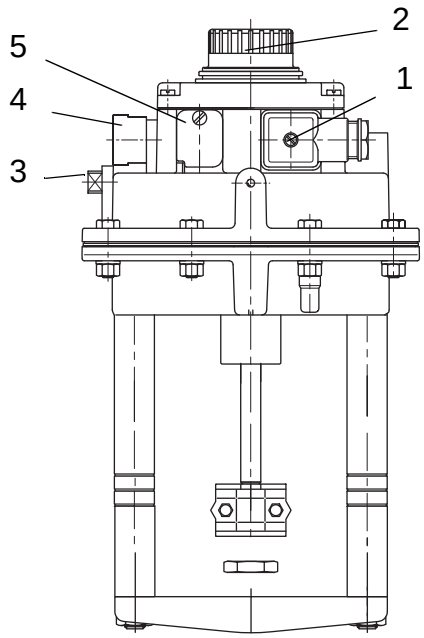

2.2tf506821.en

1 Plug connector
2 Zero adjuster
3 Stopper (Pressure gauge)
4 Vent plug
5 Cover plate
(span and tight closing function)

c) **For the electropneumatic actuator (NC):**
Apply a pressure of approximately 3 bar to the “Supply” connection and additionally connect a control signal of approximately 10 mA to retract the actuator stem.

For the electropneumatic actuator (NO):
If necessary, pressurize the top diaphragm chamber until the plug stem and actuator stem come in contact so that the stem connector can be mounted.

d) Follow the assembly instructions found in chapter **Separating the valve from the actuator.**

Change Diaphragm and Spare Parts

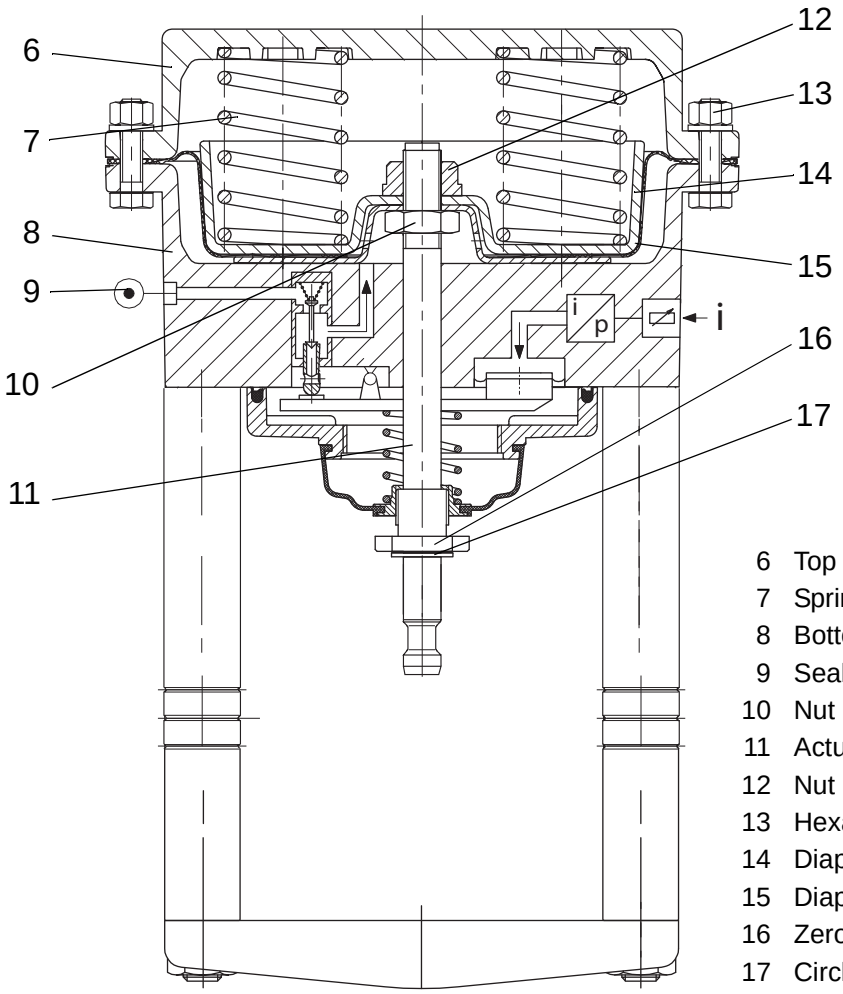

6 Top actuator case
7 Springs
8 Bottom actuator case
9 Seal
10 Nut
11 Actuator stem
12 Nut
13 Hexagonal bolts and nuts
14 Diaphragm plate
15 Diaphragm
16 Zero adjuster
17 Circlip

2.2tf506821.en

(Cont'd)

(Cont'd)

a) Separate the actuator from the valve as described in chapter **Separating the valve from the actuator**.

b) Unscrew the hexagonal bolts and nuts (13) connecting both actuator cases.

WARNING! **Risk of injury!**
Loosen the short bolts first, **then slowly and in a criss-cross pattern the long bolts and nuts until the actuator springs are relieved of tension**.

Caution! Take special care with actuators whose springs have been pre-loaded at the factory, distinguished by the bolts and nuts on the bottom diaphragm case.

c) Lift off the top actuator case (6).

d) Remove the springs (7), (NC version - only).

e) Remove the circlip (17), (NC version - only).

f) Pull the actuator stem (11), diaphragm plate (14) and diaphragm (15) out of the bottom actuator case (8).

g) Remove the nut (12) and pull off the diaphragm plate.

Note! Do not touch the lower nut (10).

h) Change diaphragm (15).

i) Assemble the actuator in reversed order.

Note! Align the top actuator case flanges with the flanges of the bottom actuator case before reattaching the hexagonal bolts and nuts.

2.2tf506821.en

Checking - Adjusting Zero and Span

Electropneumatic Actuator Only

Note! Make adjustments on the mounted valve only.

Zero and span are adjusted to determine the starting point and the upper range value of the actuator. When the control signal (reference variable) issued by the controller changes from 4 to 20 mA, the control valve must correspondingly pass through its entire travel range from 0 to 100%. Zero adjustment is always based on the closed position of the control valve.

	Closed fail-safe position, (NC)	**Open fail-safe position, (NO)**
Zero	4 mA	20 mA
Upper range	20 mA	4 mA

Note! Zero and span of the electro-pneumatic actuator are adjusted to rated travel by the manufacturer. We recommend, however, that you check zero after the actuator has been attached to the valve. Proceed as described below.

a) Connect an ammeter to the control signal input and apply compressed air to the “Supply” input.

b) Loosen the fastening screw and push the cover plate (2) aside.

c) Pull the jumper (3) from the pins to deactivate the tight-closing function.

Zero is adjusted on the adjuster (1) and the upper range value on the potentiometer for span (4).

Note! Any span adjustment results in a shift of zero. Therefore, the zero point must be readjusted after span adjustment.

2.2tf506821.en

Adjusting Actuators with Fail-Safe Position “Actuator Stem Extends” (NC)

Zero Point (Starting Point)

a) Use an ammeter to adjust the input signal to 4 mA.

b) Turn zero adjuster (1) until the plug stem just begins to move from its rest position.

c) Switch off the input signal and then slowly increase it again. Check if the plug stem begins to move at 4 mA.

d) Correct any deviations via the zero adjuster (1). Turning clockwise causes the valve to leave its rest position earlier, whereas turning counterclockwise delays the valve leaving its rest position.

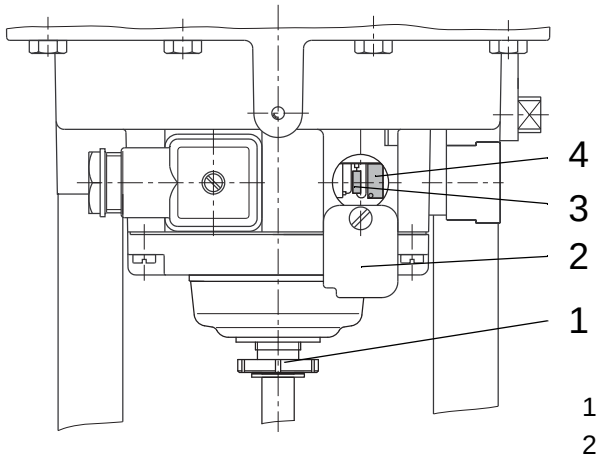

2.2tf506821.en

1 Zero adjuster
2 Cover plate
3 Jumper
4 Potentiometer for span

Upper Range Value

e) After the starting point has been adjusted, use the ammeter to increase the input signal to 20 mA. When reaching the upper range value of 20 mA, the plug stem must have passed through its entire rated travel range of 100%.

f) Adjust the potentiometer for span (4) until the upper range value is correct. Turning clockwise increases the travel, turning counterclockwise reduces the travel.

g) After correction, switch off the input signal and slowly increase it again. First check the starting point (4 mA), then the upper range value (20 mA).

h) Repeat the correction procedure until both values are correct.

i) Plug jumper (3) on the pins again to activate the tight-closing function.

Adjusting Actuators with Fail-Safe Position “Actuator Stem Retracts” (NO)

Zero Point (Starting Point)

a) Use ammeter to adjust the input signal to 20 mA.

b) Remove the protective cap (5) and turn the zero adjuster (1) until the plug stem just begins to move from its rest position.

c) Increase the input signal and slowly reduce it again to 20 mA. Check if the plug stem begins to move at 20 mA.

d) Correct any deviations via the zero adjuster (1). Turning counter-clockwise causes the valve to move from its rest position with delay, whereas turning clockwise causes the valve to move earlier.

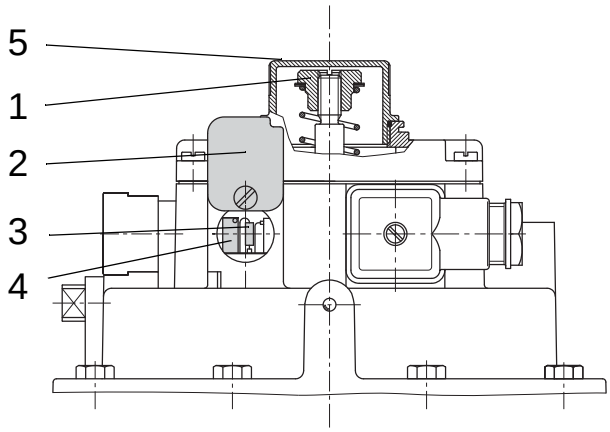

1 Zero adjuster
2 Cover plate
3 Jumper
4 Potentiometer for span
5 Protective cap

2.2tf506821.en

Upper Range Value

e) After the starting point has been adjusted, use the ammeter to adjust the input signal to 4 mA. When reaching the upper range value of 4 mA, the plug stem must have passed through its entire rated travel range of 100%.

f) Adjust the potentiometer for span (4) until the upper range value is correct. Turning clockwise increases the travel, and turning counterclockwise reduces the travel.

g) After correction, increase the input signal again. First check the starting point (20 mA), then the upper range value (4 mA).

h) Repeat the correction procedure until both values are correct.

i) Put the protective cap (5) back over the zero adjuster.

j) Plug the jumper (3) on the pins again to activate the tight-closing function.

Positioner

Change Positioner

WARNING!

Risk of injury!
Make sure before dismantling, that the pipeline is drained and free from media. Also, if necessary, allow the control valve to cool down or warm up to ambient temperature prior to starting any work on the valve.

WARNING!

Risk of injury!
Shut off the electrical supply and depressurize the positioner before dismantling.

a) Open the positioner hatch (1) and mark the electrical supply cables inside.

b) Dismantle the electrical- and pneumatic connection.



2.2tf506821.en

1 Positioner hatch
2 Mounting screws

Note! Remember to unhook the **Range Spring** from the **lever** at the back of the positioner **type 3760** before continuing the disassembly.
See picture in the 3760 chapter below.

c) Unscrew the mounting screws (2) and remove and change the positioner.

d) Assemble in reverse order.

Zero Presetting/Calibration

In case of inconsistencies in the closing position of the valve, e.g. with soft-sealed plugs, it may be necessary to re-calibrate the zero point.

Note! **Always** re-calibrate the zero point when the positioner and the valve have been separated.

3730-1

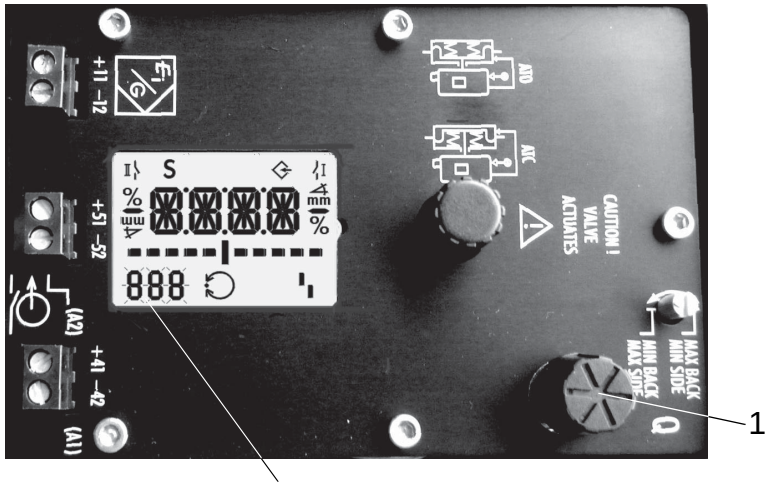

1 Rotary push button
2 Parameter/error code

2.2tf506821.en

Start the zero calibration by activating Code P16 as follows:

a) Turn rotary push button (1) until Code **P16** appears (2).

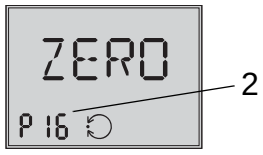

b) Press rotary push button (1) for 6 seconds. 6-5-4-3-2-1 is counted down on the display.

c) Zero calibration has started, the display blinks!

d) The positioner moves the control valve to the CLOSED position and re-calibrates the internal electric zero point.

e) When the zero calibration has been successfully completed, the positioner returns to closed loop operation (status indication).

Cancelling zero calibration

The zero calibration can be cancelled by pressing rotary push button (1). The positioner then moves to the fail-safe position (indicated by S on the display).

A new zero calibration can be started directly afterwards.

3730-2, 3730-3

Note! The valve briefly moves from the current travel/angle of rotation position to the closed position.

Note! The positioner must be connected to the supply air to perform the zero calibration.

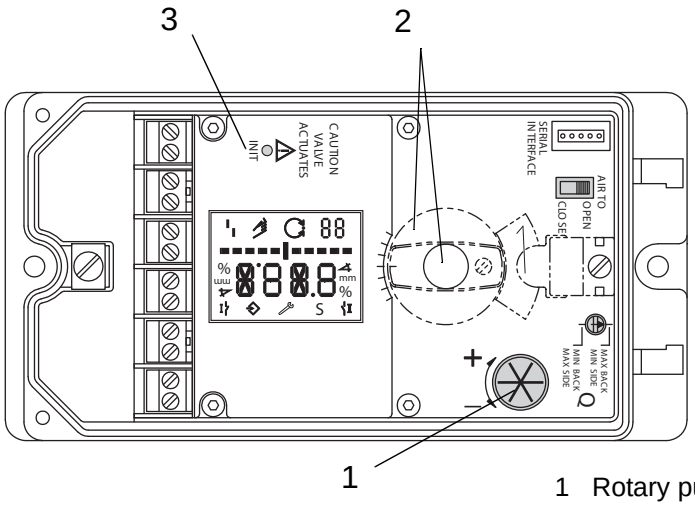

1 Rotary push button
2 Cap or rotary switch
3 Initialization key

2.2tf506821.en

Enable configuration:

a) Turn rotary push button (1) → Code 3, display: NO
b) Press rotary push button (1), Code 3 blinks
c) Turn rotary push button (1) → YES
d) Press rotary push button (1) → Display (4)

(Cont'd)

(Cont'd)

Perform zero calibration:

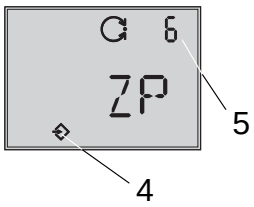

4 Configuration enabled
5 Code

e) Turn push button (1) → Code 6
f) Press push button (1), Code 6 blinks
g) Turn push button (1) → ZP
h) Press push button (1)
i) Press INIT key (3)!

Zero calibration is started, the positioner moves the control valve to the CLOSED position and readjusts the internal electrical zero point.

2.2tf506821.en

3730-4, 3730-5

Note! The valve briefly moves from the current travel/angle of rotation position to the closed position.

Note! The positioner must be connected to the supply air to perform the zero calibration.

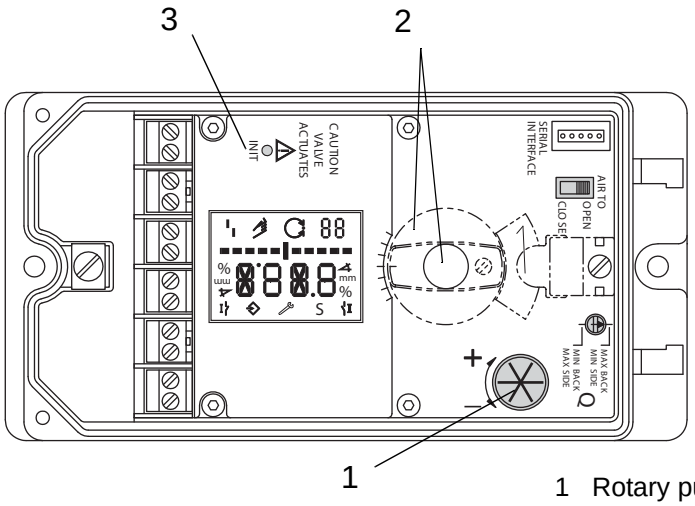

1 Rotary push button
2 Cap or rotary switch
3 Initialization key

2.2tf506821.en

Enable configuration:

a) Turn rotary push button (1) → Code **3**
b) Press rotary push button (1)
c) Turn rotary push button (1) → **ON**
d) Press rotary push button (1) → Display (4)

(Cont'd)

(Cont'd)

Perform zero calibration:

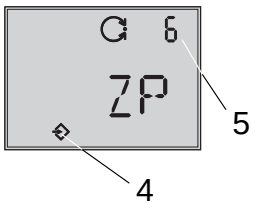

4 Configuration enabled
5 Code

e) Turn push button (1) → Code 6
f) Press push button (1), Code 6 blinks
g) Turn push button (1) → ZP
h) Press push button (1)
i) Press INIT key (3)!

Zero calibration is started, the positioner moves the control valve to the CLOSED position and readjusts the internal electrical zero point.

2.2tf506821.en

3760

Adjustment for “Actuator Stem Extends'' (NC)

Note! To ensure that the entire closing force can be effective in the control valve, the diaphragm chamber must be completely vented when reaching the lower (operating direction >>) and the upper (operating direction <>) range value of the reference variable.

Therefore, set input signal to a slightly increased starting point of approximately 0.23 bar (4.5 mA) when the operating direction is direct >>, and to a slightly lowered starting point of 0.97 bar (19.5 mA) when the operating direction is reverse <>. This applies in particular to controllers and control systems whose output signal is limited to a range of 4 to 20 mA.

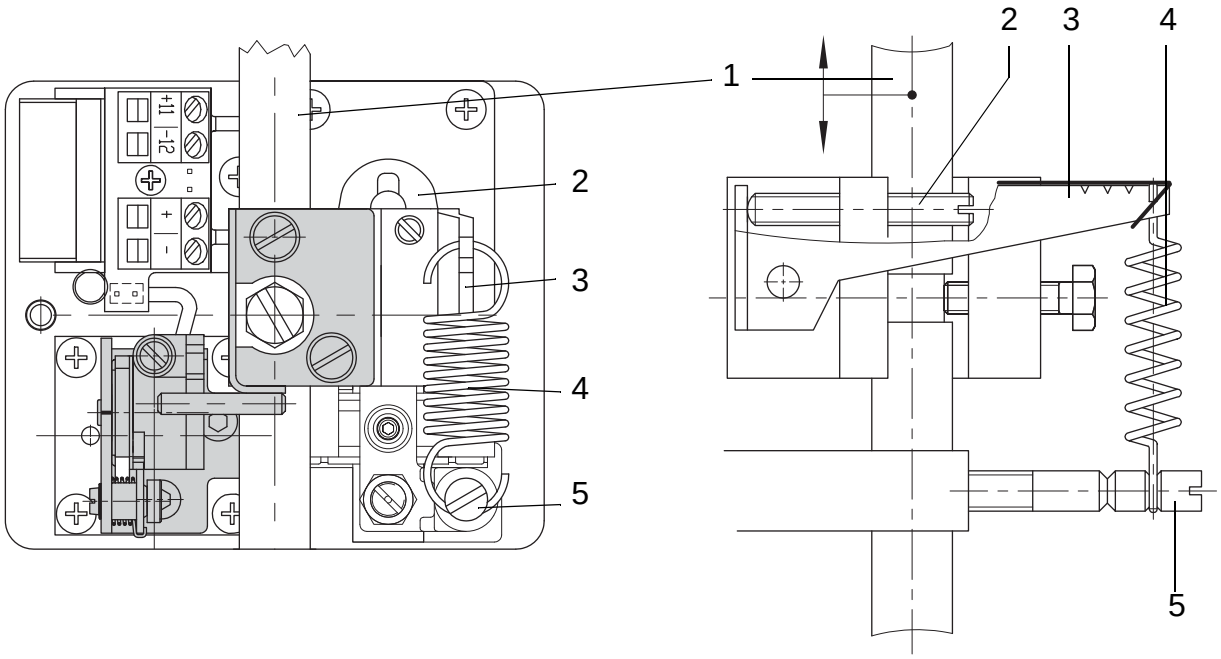

2.2tf506821.en

1 Travel
2 Zero adjustment screw
3 Lever
4 Range spring
5 Span adjustment screw

Stating Point (Zero)

e.g. 0.23 bar (4.5 mA)

a) Turn ZERO adjustment screw (2) until the plug stem just begins to move from its resting position (observe plug stem via travel indicator).

b) Decrease input signal and increase again slowly. Check whether the plug stem starts moving at a starting point of 0.23 bar (4.5 mA) and correct it, if necessary.

Upper Range Value (Travel)

e.g. 1 bar (20 mA)

c) After the starting point has been adjusted, increase input signal. The plug stem must stand still at an upper range value of exactly 1 bar (20 mA). It must have passed through 100% travel (observe the travel indicator on the valve!). If the upper range value does not correlate, correct it via SPAN adjustment screw (5). Turning the screw towards the fulcrum of the lever increases the travel, whereas turning it away reduces the travel.

Note! Make sure that the range spring (4) is vertical for adjustment. If necessary, hook the spring at another point on the lever (3).

Caution! If you change the span, the zero point must be readjusted as well.

d) Check upper range value again. Readjust both values until they are correct.

2.2tf506821.en

Adjustment for “Actuator Stem Retracts” (NO)

Note! For actuator version “Actuator stem retracts”, the diaphragm chamber must be loaded with a pressure that is sufficient to tightly close the valve, even when upstream pressure of the plant prevails. The upper range value of the reference variable must be 1 bar or 20 mA (direct operating direction >>) and the lower input range value must be 0.2 bar or 4 mA (reverse operating direction <>).

Starting Point (zero) e.g. 1 bar (20 mA)

a) Adjust input signal to 1 bar (20 mA) using the remote adjuster (ammeter).

b) Turn ZERO adjustment screw (2) until the plug stem just begins to move from its initial position.

c) Increase input signal and slowly reduce it to 1 bar (20 mA). Check if the valve begins to move at exactly 1 bar (20 mA).

d) Correct any deviations using the ZERO adjustment screw (2). Upper range value (travel) e.g. 0.2 bar (4 mA).

e) After the starting point has been adjusted, set the input signal to 0.2 bar (4 mA) via remote adjuster (ammeter). The plug stem must stand still at an upper range value of exactly 0.2 bar (4 mA). It must have passed through 100% travel (observe the travel indicator on the valve!).

f) If the upper range value does not correlate, correct it using the SPAN adjustment screw (5). Turning the screw towards the fulcrum of the lever increases the travel, whereas turning it away reduces the travel.

Caution! If you change the span, the zero point must be readjusted as well.

g) Check upper range value again. Readjust both values until they are correct.

h) When correction has been completed, adjust input signal to 1 bar (20 mA) again.

i) Turn ZERO adjustment screw (2) again until the required signal pressure is indicated on a pressure gauge installed in the signal pressure line. If no pressure gauge is available, adjust the starting point to 0.97 bar (19.5 mA).

Note! After adjusting the positioner, close the actuator yoke with the cover plate. Make sure that the vent plug in the cover plate is directed downwards when the control valve is installed in the plant to prevent condensed water from collecting in the positioner.

2.2tf506821.en

3767

Adjusting the Position Transmitter

Note! The starting point (zero) and upper range value (span) must be set before calibrating the position transmitter.

Depending on the position of the 4-pin plug (symbol on plug: >> or <>), the feedback signal can be set to either a range of 4 to 20 mA or 20 to 4 mA for 0 to 100% travel.

Zero point (ZERO)

Use the switches 1 and 2 to preset the zero point and the ZERO potentiometer for fine-tuning. The adjusted value always refers to 4 mA.

Span (SPAN)

Use the switches 3 and 4 to preset the span, i.e. the upper range value, and the SPAN potentiometer for fine-tuning. The adjusted value always refers to 20 mA.

Example:

Move the valve to open position while observing the position transmitter signal. If the signal does not move in the desired direction, switch over the multi-pin plug. Adjust the zero point (4 mA) and span (20 mA) for the valve positions according to table below.

2.2tf506821.en

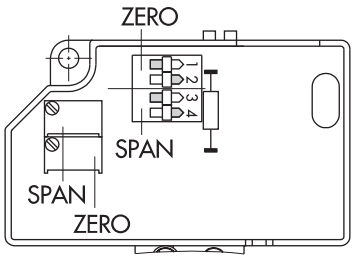

Position transmitter			
Valve movement	Observed transmitter signal	Direction of signal	Adjust zero/span to
OPEN	Current increases	OK	20 mA Valve OPEN 4 mA Valve CLOSED
		Not OK Reconnect plug	4 mA Valve OPEN 20 mA Valve CLOSED
CLOSED	Current decreases	OK	4 mA Valve OPEN 20 mA Valve CLOSED
		Not OK Reconnect plug	20 mA Valve OPEN 4 mA Valve CLOSED

Adjusting the Zero Point

a) Use the input signal of the positioner to move the valve to closed position (valve CLOSED – travel 0%).

b) The ammeter must now indicate approximately 4 mA.

c) Correct smaller deviations on the ZERO potentiometer until the meter shows exactly 4 mA. If deviations are too high and cannot be corrected using the potentiometer (adjustment range of approx. 20 turns), set the switches 1 and 2 to indicate an mA value which is within the adjustment range of the ZERO potentiometer.

d) Set the zero point to exactly 4 mA using the ZERO potentiometer.

2.2tf506821.en

Adjusting the Span

a) Use the input signal of the positioner to move the valve to open position (valve OPEN – travel 100%).

b) The ammeter must now indicate approx. 20 mA.

c) Correct smaller deviations on the SPAN potentiometer until the meter shows exactly 20 mA. If deviations are too high, set the switches 3 and 4 to indicate an mA value which is within the adjustment range of the SPAN potentiometer.

d) Turn the SPAN potentiometer until the meter shows exactly 20 mA. Since zero and span have a mutual influence on each other, repeat the correction procedure at both potentiometers until both values are correct.

3785

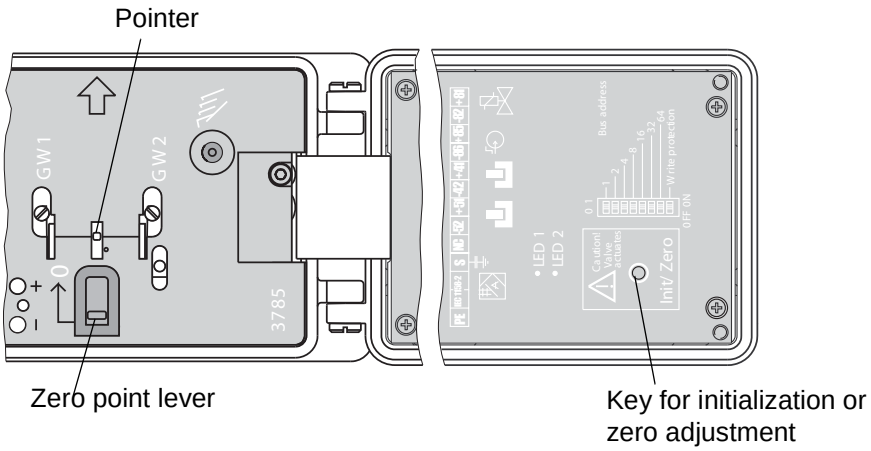

Adjusting mechanical zero

Note! Zero must be adjusted with the valve closed (for three-way valves with the actuator stem extended).

a) Firmly push the zero point lever, which is located on the cover plate of the positioner, once in the direction indicated by the arrow as far as it will go. The yellow pointer will then be on the white marking.

For control valves with starting position OPEN, e.g. an actuator with fail-safe action “Actuator stem retracts”, feed supply air to the positioner first. As soon as the manual operation function is activated, the signal pressure builds up and the valve moves to closed position. Subsequently, the zero point lever can be operated.

Electric zero calibration

If mechanical zero has shifted during the valve's operation, an electric zero calibration can be carried out. To do so, press the Init/Zero key located on the inside of the lid.

Caution! The control valve moves to its end position.

a) Firmly push the zero point lever, which is located on the cover plate of the positioner, once in the direction indicated by the arrow as far as it will go. The yellow pointer will then be on the white marking.

b) Press key again to start electric calibration.

After the key has been pressed for the second time, it is locked for approximately one minute. Electric calibration is completed when the positioner moves to the position predetermined by the reference variable.

2.2tf506821.en

Spare Parts

Valve 3347 Barstock

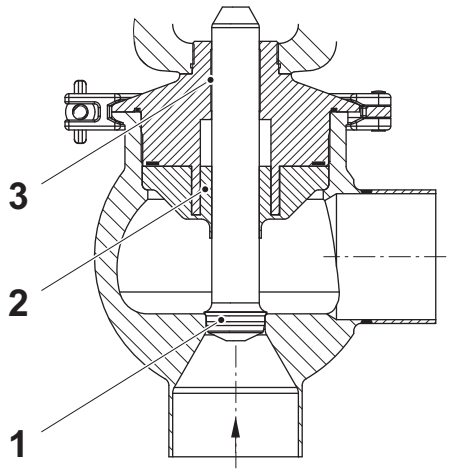

PN16

Component article No.	Spare part article No.	Description	Included parts	Pos.	Qty.
90511-6364	90503-2436	Spare parts kit valve, DN15, KVS 1.6	Plug Stem sealing Wiper	1 2 3	1 1 1
90513-3812	90513-8346	Spare parts kit valve, DN25, KVS 4	Plug Stem sealing Wiper	1 2 3	1 1 1
90513-3813	90513-8347	Spare parts kit valve, DN25, KVS 6.3	Plug Stem sealing Wiper	1 2 3	1 1 1
90517-3322	90517-4147	Spare parts kit valve, DN25, KVS 10	Plug Stem sealing Wiper	1 2 3	1 1 1
90511-5941	90512-3319	Spare parts kit valve, DN40, KVS 4	Plug Stem sealing Wiper	1 2 3	1 1 1
6-31801-9619-1 6-31801-9816-1 90510-4678 90513-4530	6-990425-33	Spare parts kit valve, DN40, KVS 10	Plug Stem sealing Wiper	1 2 3	1 1 1
90512-8717	6-990425-28	Spare parts kit valve, DN40, KVS 16	Plug Bushing Wiper Sealing box	1 2 3 -	1 1 1 1
6-31801-9619-2 6-31801-9816-2 90510-4679 90523-1145	6-990425-34	Spare parts kit valve, DN40, KVS 16	Plug Stem sealing Wiper	1 2 3	1 1 1

2.2tf506822.en

Component article No.	Spare part article No.	Description	Included parts	Pos.	Qty.
90510-2635	90513-2561	Spare parts kit valve, DN50, KVS 10	Plug Stem sealing Wiper	1 2 3	1 1 1
90510-4680 6-31801-9619-3 6-31801-9816-3	6-990425-35	Spare parts kit valve, DN50, KVS 25	Plug Stem sealing Wiper	1 2 3	1 1 1
90510-4681 6-31801-9619-4 6-31801-9816-4	6-990425-36	Spare parts kit valve, DN50, KVS 35	Plug Stem sealing Wiper	1 2 3	1 1 1
90511-6372	90512-0736	Spare parts kit valve, DN50, KVS 35	Plug Stem sealing Wiper	1 2 3	1 1 1
90523-1111	6-990425-30	Spare parts kit valve, DN50, KVS 35	Plug Bushing Wiper Sealing box	1 2 3 -	1 1 1 1
90510-9827 90511-6373 90513-3802 90513-4529 90523-1112	6-990425-31	Spare parts kit valve, DN65, KVS 60	Plug Stem sealing Wiper	1 2 3	1 1 1

2.2tf506822.en

PN40

Component article No.	Spare part article No.	Description	Included parts	Pos.	Qty.
90512-8091 90521-2809	90513-2564	Spare parts kit valve, DN25, KVS 0.63 %	Plug Stem sealing Wiper	1 2 3	1 1 1
90503-6723 90512-8092 90521-2810	90513-2565	Spare parts kit valve, DN25, KVS 1 %	Plug Stem sealing Wiper	1 2 3	1 1 1
90503-6724 90512-8093 90521-2811	90503-6726	Spare parts kit valve, DN25, KVS 1.6 %	Plug Bushing Wiper Sealing box	1 2 3 -	1 1 1 1
90512-8094 90521-2812	90513-2567	Spare parts kit valve, DN25, KVS 2.5 %	Plug Stem sealing Wiper	1 2 3	1 1 1
90503-3972 90512-8095 90521-2813	90511-9984	Spare parts kit valve, DN25, KVS 4 %	Plug Stem sealing Wiper	1 2 3	1 1 1
90512-8096 90521-2814	90513-2569	Spare parts kit valve, DN40, KVS 6.3 %	Plug Stem sealing Wiper	1 2 3	1 1 1

Component article No.	Spare part article No.	Description	Included parts	Pos.	Qty.
90512-8097 90521-2815	90513-2570	Spare parts kit valve, DN40, KVS 10 %	Plug Stem sealing Wiper	1 2 3	1 1 1
90512-8098 90521-2815	90513-2571	Spare parts kit valve, DN50, KVS 16 %	Plug Stem sealing Wiper	1 2 3	1 1 1

Linear PN16

Component article No.	Spare part article No.	Description	Included parts	Pos.	Qty.
6-31816-0060-1	90503-6247	Spare parts kit valve, DN25, KVS 4 Lin.	Plug Stem sealing Wiper	1 2 3	1 1 1
6-31816-0060-2	90503-6248	Spare parts kit valve, DN25, KVS 6.3 Lin.	Plug Stem sealing Wiper	1 2 3	1 1 1
6-31816-0060-3	90503-6249	Spare parts kit valve, DN40, KVS 10 Lin.	Plug Stem sealing Wiper	1 2 3	1 1 1
6-31816-0060-4	90503-6250	Spare parts kit valve, DN40, KVS 16 Lin.	Plug Stem sealing Wiper	1 2 3	1 1 1
6-31816-0060-5	90503-6251	Spare parts kit valve, DN50, KVS 25 Lin.	Plug Stem sealing Wiper	1 2 3	1 1 1
6-31816-0060-6	90503-6252	Spare parts kit valve, DN50, KVS 40 Lin.	Plug Stem sealing Wiper	1 2 3	1 1 1
90503-6244	90503-6253	Spare parts kit valve, DN65, KVS 60 Lin.	Plug Stem sealing Guide bushing	1 2 3	1 1 1
90511-6374 90503-6245	90503-6254	Spare parts kit valve, DN80, KVS 80 Lin.	Plug Stem sealing Guide bushing	1 2 3	1 1 1
90503-6246	90503-6255	Spare parts kit valve, DN100, KVS 100 Lin.	Plug Stem sealing Guide bushing	1 2 3	1 1 1

2.2tf506822.en

Actuator 3277

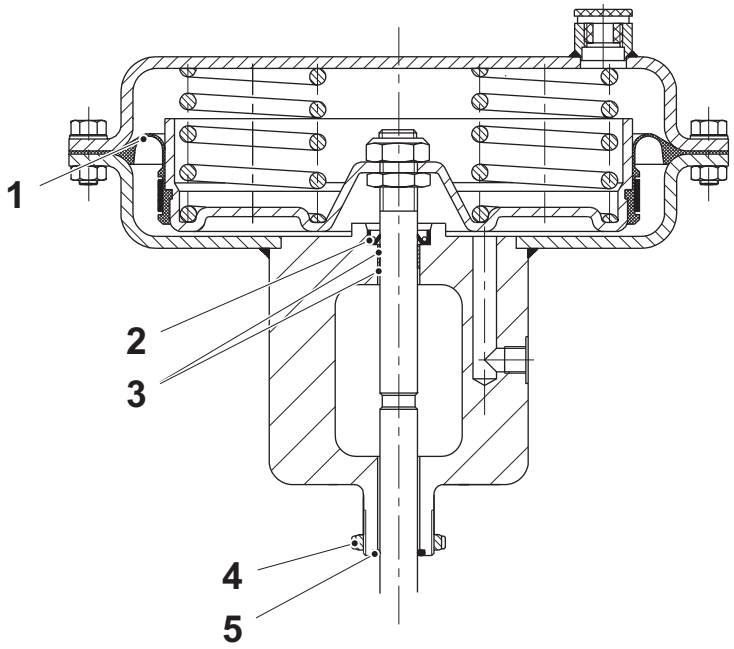

Component article No.	Spare part article No.	Description	Included parts	Pos.	Qty.
6-31816-0060-5 6-31816-0060-6 90503-6244 90503-6245 90511-6373 90512-8096 90512-8097 90512-8098 90521-2814 90521-2815 90521-2816	90519-3710	DN40 - DN80, KVS6.3 - KVS80, Mebrane 350 cm2	Diaphragm	1	1
			Seal	2	1
			Bushing	3	2
			Lock nut	4	1
			Stripper	5	1
90503-6246	90519-3711	DN 100, KVS 100, Membrane 700 cm2	Diaphragm	1	1
			Seal	2	1
			Bushing	3	2
			Lock nut	4	1
			Stripper	5	1
90510-5886 90510-5887 90510-5890	6-990418-58	DN25 - DN40, KVS10 - KVS16, Mebrane 240 cm2	Diaphragm	1	1
			Seal	2	1
			Bushing	3	2
			Lock nut	4	1
			Stripper	5	1

2.2tf506822.en

Component article No.	Spare part article No.	Description	Included parts	Pos.	Qty.
6-31816-0060-1 6-31816-0060-2 6-31816-0060-3 6-31816-0060-4 90503-3972 90503-6723 90503-6724 90510-2635 90510-9827 90511-6364 90511-6372 90511-6374 90512-8091 90512-8092 90512-8093 90512-8094 90512-8095 90512-8717 90521-2809 90521-2810 90521-2811 90521-2812 90521-2813	90519-3709	DN25 - DN80, KVS0.63 - KVS80, Mebrane 240 cm2	Diaphragm	1	1
			Seal	2	1
			Bushing	3	2
			Lock nut	4	1
			Stripper	5	1

2.2tf506822.en

Actuator 3372 I/P

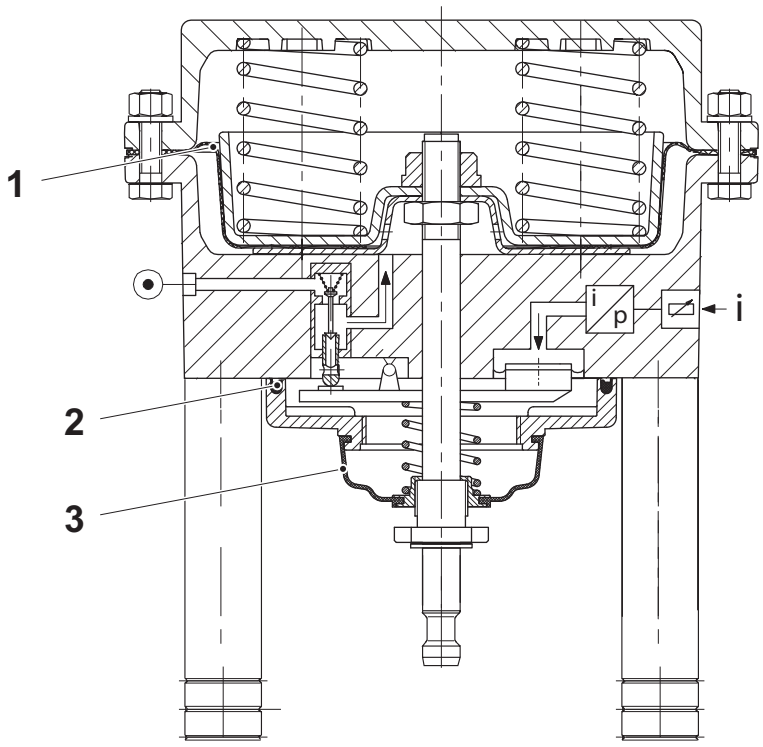

2.2tf506822.en

Component article No.	Spare part article No.	Description	Included parts	Pos.	Qty.
6-31801-9619-1 6-31801-9619-2 6-31801-9619-3 6-31801-9619-4 6-31801-9816-1 6-31801-9816-2 6-31801-9816-3 6-31801-9816-4 90510-4678 90510-4679 90510-4680 90510-4681 90511-5941 90513-3812 90513-3813 90513-4530	6-990418-58	DN25 - DN65, KVS4 - KVS60, Mebrane 120 cm2	Diaphragm	1	
			O-ring	1	
			Seal	1	
90517-3322 90523-1111 90523-1145	90510-4815	120 cm2	Diaphragm	1	1
90523-1112 90513-3802 90513-4529	90510-4816	350 cm2	Diaphragm	1	1

Positioner 3725, 3730



Description Positioner, complete unit	Spare part article No.	Pos.	Qty.
3725 4-20 mA Autotune	90523-1319	-	1
3730-1 4-20 mA with LCD	90510-4762	-	1
3730-2 4-20 mA Autotune and Expert Diagnostics	90503-4689	-	1
3730-3 HART 4-20 mA Expert Diagnostics	90510-4763	-	1
3730-4 Profibus	90510-4764	-	1
3730-5 Foundation Fieldbus	90510-4765	-	1

2.2tf506822.en

Description Mounting kit for positioner 3730	Spare part article No.	Pos.	Qty.
To actuator 3277-5, 120 cm^2	90510-4441	-	1
To actuator 3277, 240-700 cm^2 NC	90512-1665	-	1
To actuator 3277, 240 cm^2 NO Connection pipe for 240cm^2	90512-1666	-	1
To actuator 3277, 350 cm^2 NO Connection pipe for 350cm^2	90512-1667	-	1
To actuator 3277, 700 cm^2 NO Connection pipe for 700cm^2	90512-1668	-	1
Spring for positioner 3760	6-990409-96	-	1

Note! At exchange of positioner 3760 and 3767; Choose 3730-1 together with mounting kit that corresponds with actuator size and function.

At exchange of positioner 3785; Choose 3730-4 together with mounting kit that corresponds with actuator size and function.

Tools

Lubrication

Description **Lubrication**	Spare part article No.	Included parts	Pos.	Qty.
Grease	90512-7283	-	-	1

2.2tf506822.en

Tetra Pak

Maintenance & Spare Parts

Regulating Valve

(Samson)

3323



2.21224800-0101.fro

Tetra Pak

Doc No. 1224800-0101

Regulating Valve

3323

This document refers to components specified in Technical Manual, on Maintenance & Spare Parts CD/DVD or on Tetra Pak Intranet.

2.21224800-0101.fro

Version 01 Issue 2010-11

Doc No. 1224800-0101

Tetra Pak

Tetra Pak Processing Systems AB

Maintenance 1
General 1
Valve 1
Actuator 2
Valve 3323 3
Change Packing 3
Replace the Seat and Plug 6
Actuator 3372 I/P 10
Separating the Valve From the Actuator 10
Change Actuator 12
Change Diaphragm and Spare Parts 13
Checking - Adjusting Zero and Span 15
Adjusting Actuators with Fail-Safe Position "Actuator Stem Extends" (NC) 16
Adjusting Actuators with Fail-Safe Position "Actuator Stem Retracts" (NO) 17
Spare Parts 18
Valve 3323 18
Actuator 3372 I/P 19
Tools 20

1.0 1224800-0101.TOC

This page intentionally left blank

Maintenance

General

Valve

The Type 3323 Three-way Valve is based on the modular principle and can be combined with pneumatic as well as electric actuators.

The three-way valves operate either as mixing or diverting valve depending on the plug arrangement.

In mixing valves, the media to be mixed enter at ports A and B and the united flow leaves at port AB.

In diverting valves, the medium enters at port AB and the divided flows leave at ports A and B.

The flow across A or B to AB and vice versa is determined by the cross-sectional area between the seats and plugs.

The position of the plugs is changed by the signal pressure acting on the actuator. The plug stem is sealed by means of a spring loaded PTFE-ring packing and connected to the actuator stem via the stem connector.

2.2tf506823.en

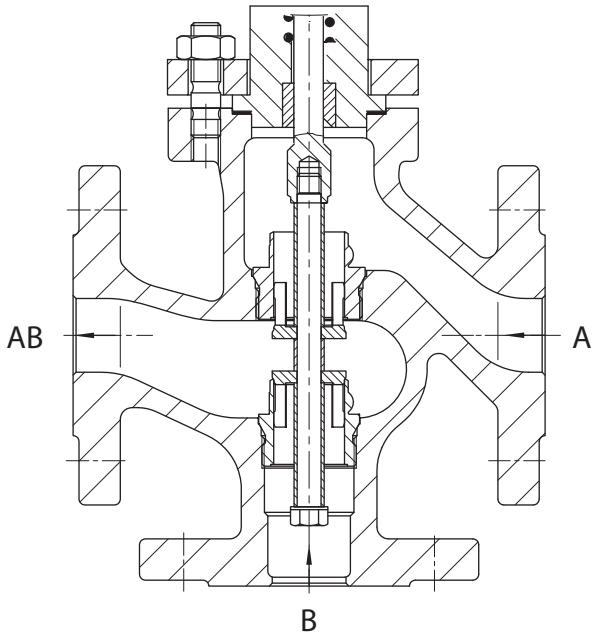

Mixing valve

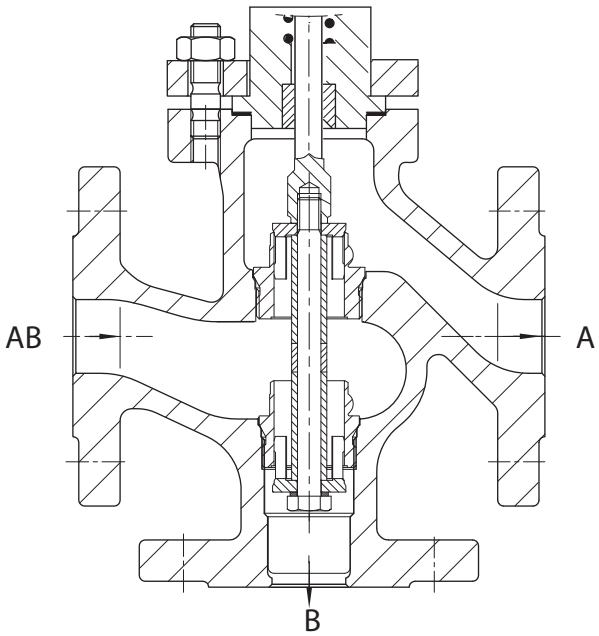

Diverting valve

Actuator

The actuators complement the valves to form pneumatic or electro-pneumatic control valves. The actuators basically consist of two diaphragm cases, a rolling diaphragm and springs.

The electro-pneumatic actuators are additionally equipped with an I/P converter and a pneumatic control system. For actuators with fail-safe position "actuator stem extends", the converter and the control system are mounted in the lower diaphragm case, and for versions "actuator stem retracts", in the upper diaphragm case.

The signal pressure creates a force which acts on the diaphragm. The springs installed in the diaphragm chamber oppose this force, thus ensuring compensation. When the signal pressure fails, the springs installed either in the top or bottom diaphragm chamber determine the actuator's **fail-safe position**.

Actuator stem extends
NC (Normally Closed) = FA

Upon signal pressure failure, the actuator stem extends and closes the valve. For which port is closed, see nameplate. Normally it is as follows:
- In mixing valves, port B is closed (NCB).
- In diverting valves, port A is closed (NCA).

Actuator stem retracts
NO (Normally Open) = FE

Upon signal pressure failure, the actuator stem retracts and opens the valve. For which port is opened, see nameplate. Normally it is as follows:
- In mixing valves, port B is opened. (NCA).
- In diverting valves, port A is opened. (NCB)

Electro-pneumatic actuators

The electric control signal issued by the controller is transmitted as reference variable ranging from 4 to 20 mA to the I/P converter where it is converted into a proportional pressure signal. The pressure signal creates a force that acts on the measuring diaphragm. This force is then compared with the force of the measuring spring. The movement of the measuring diaphragm is transmitted via the lever to the force switch, and finally a corresponding signal pressure is produced.

Changes in the input signal or the valve position effect, in turn, a change in the actuator stem position, corresponding to the reference variable.

2.2tf506823.en

Tight-closing function

The electro-pneumatic actuator is either fully vented or fully pressurized whenever the reference variable exceeds or falls below a certain preset value.

The lower and the upper range value of the input signal are adjusted to a fixed value at the zero adjuster and the potentiometer for span, however, they can be corrected after attachment to the valve.

Valve 3323

The control valve is subject to natural wear, especially at the seat, plug and packing. Depending on the application, the valve needs to be checked regularly to prevent against possible failures. If leakage occurs, this could be caused by a damaged packing.

Change Packing

WARNING! **Risk of injury!**
Make sure before dismantling, that the pipeline is drained and free from media. Also, if necessary, allow the control valve to cool down or warm up to ambient temperature prior to starting any work on the valve.

2.2tf506823.en

Caution! On performing any work on the valve body, first shut off the supply pressure, disconnect the supply pressure line and remove the actuator. Removing the valve from the pipeline is recommend.

Note! Always separate the actuator and the valve prior to carrying out repairs!

If the valve leaks at the packing assembly, the packing (2) of the packing assembly needs to be exchanged as follows:

(Cont'd)

(Cont'd)

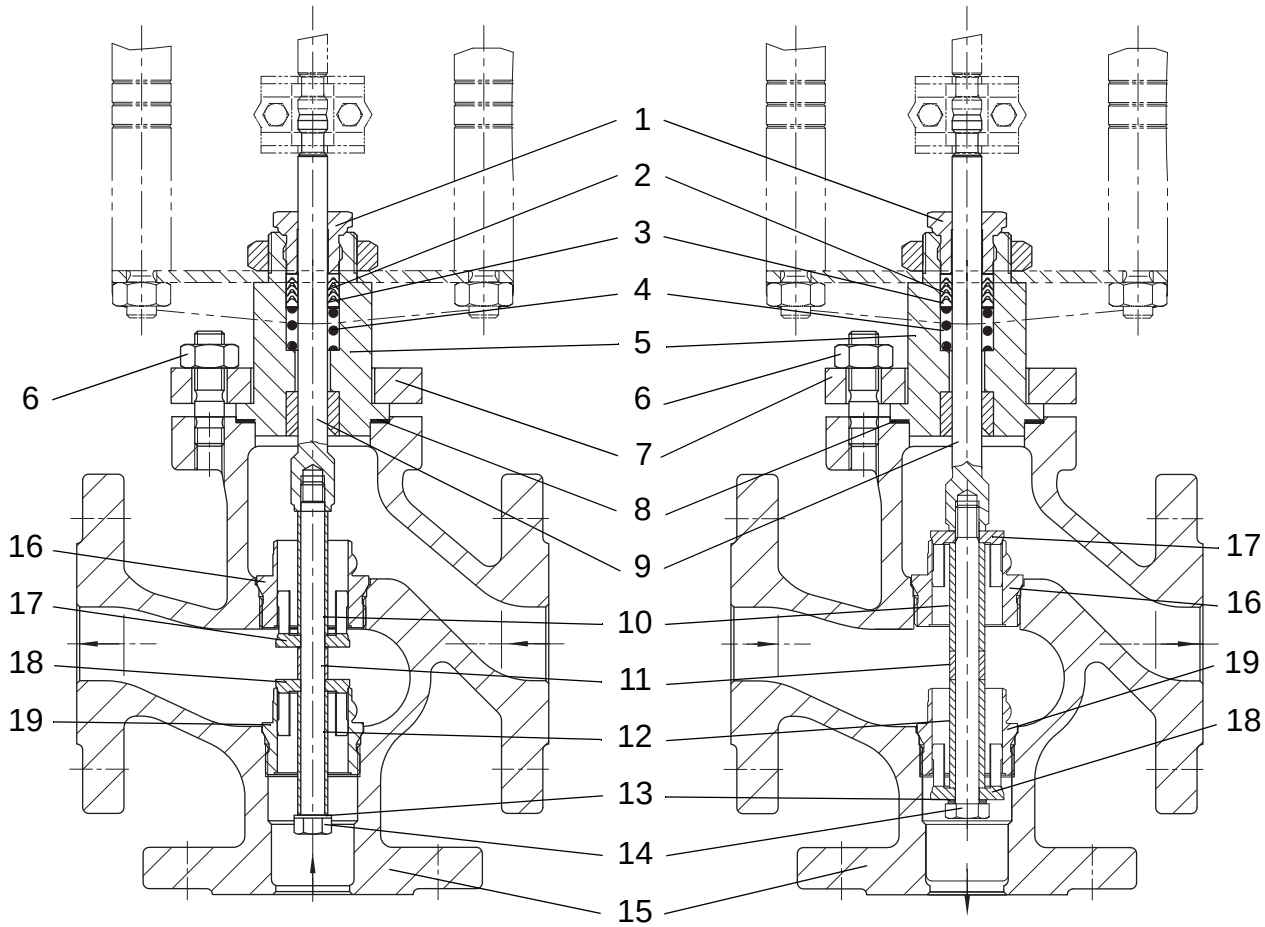

Mixing valve,
NC version

Diverting valve,
NC version

1	Threaded bushing	10	Sleeve
2	Packing	11	Sleeve
3	Washer	12	Sleeve
4	Spring	13	Washer
5	Valve bonnet	14	Screw
6	Nuts	15	Valve body
7	Flange	16	Upper seat
8	Gasket	17	Upper plug
9	Plug stem	18	Lower plug
		19	Lower seat

(Cont'd)

(Cont'd)

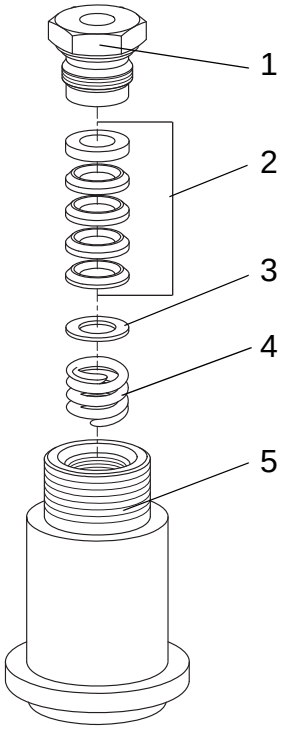

1 Threaded bushing
2 Packing
3 Washer
4 Spring
5 Valve bonnet

2.2tf506823.en

a) Remove the actuator as described in chapter **Separating the valve from the actuator**.

b) Unscrew the threaded bushing (1).

c) Remove the nuts (6) and the flange (7).

d) Lift the valve bonnet (5) over the plug stem (9) off the valve body (15). Check the gasket (8) in the valve body for damage. It is recommend that the gasket is replaced.

e) Pull the damaged packing (2) out of the valve bonnet (5) using an suitable tool. Remove the washer (3) and spring (4) and clean the packing chamber.

f) Apply (see chapter **Spare Parts**, section **Tools**) to the individual parts of the new packing and the plug stem (9).

g) Place the valve bonnet (5) with flange (7) over the plug stem (9) on the valve body (15) and secure with nuts (6). Observe the tightening torques given in the table below.

h) Insert the spring (4) first and then the washer (3). Carefully slide the new packing (2) over the plug stem (9) into the packing chamber.

i) Screw in the threaded bushing (1) and tighten.

j) Follow the assembly instructions found in chapter **Separating the valve from the actuator**.

Replace the Seat and Plug

WARNING!

Risk of injury!
Remove the valve from the pipeline before disassembling.

Note! Always separate the actuator and the valve prior to carrying out repairs!

The mixing and the diverting valve differ as to the arrangement of their plugs and sleeves. When replacing the seat and plug, it's recommended that you also exchange the packing and the gasket, see chapter **Change packing**.

Disassembly - Mixing Valve

a) Remove the actuator as described in chapter **Separating the valve from the actuator**.
If the actuator stem extends, first apply a pressure which exceeds the lower range value to the actuator (see nameplate).

b) Screw out the threaded bushing (1).

c) Remove the nuts (6) and the flange (7).

d) Lift the valve bonnet (5) over the plug stem (9) off the valve body (15). Check the gasket (8) in the valve body for damages. It is recommend that the gasket is replaced.

e) Hold the plug stem (9) from above in place using an appropriate tool on the hexagon head socket of the plug stem. Remove the screw (14) from below. Pull the screw and washer (13) as well as the sleeve (12) from below out of the valve body (15) and the plug stem (9) from above. Remove the sleeve (10) from the side.

f) Screw out the upper seat (16) using a seat tool (see chapter **Spare Parts**, section **Tools**).

g) Take both plugs (17 and 18) and sleeve (11) out of the valve body (15).

h) Screw out the lower seat (19) using a seat tool (see chapter **Spare Parts**, section **Tools**).

i) Clean all the parts thoroughly and replace, if necessary.

(Cont'd)

2.2tf506823.en

(Cont'd)

Assembly - Mixing Valve

Apply lubricant (see chapter **Spare Parts**, section **Tools**) to the thread and the sealing conus of the new or the old, reworked seats as well as to the end of the thread of the screw (14).

a) Use a seat tool (see chapter **Spare Parts**, section **Tools**) to screw in the lower seat (19). Observe the tightening torque as indicated in the table below.

b) Keep the following order to slide the serrated lock washer (13), sleeve (12), lower plug (18), sleeve (11), upper plug (17) and the sleeve (10) on the screw (14). Loosely screw a hexagon head nut on the end of the thread.

c) Insert the screw with the sleeves and the plugs from below into the valve body (15) so that the lower plug (18) slides into its seat.

d) Use a seat tool (see chapter **Spare Parts**, section **Tools**) to screw the upper seat (16) firmly into the valve body (15), observing the tightening torques as indicated in the table below.

e) Press against the screw (14) from below, remove the hexagon nut threaded onto it and screw on the plug stem (9) instead. Hold the plug stem in place using an appropriate tool on the hexagon head socket of the plug stem and tighten all the parts with the screw.

f) Apply lubricant (see chapter **Spare Parts**, section **Tools**) to the plug stem (9) and the individual parts of the packing (2).

g) Place the valve bonnet (5) with flange (7) over the plug stem (9) on the valve body (15) and secure with nuts (6). Observe the tightening torques as indicated in the table below.

h) First, insert the spring (4) and then the washer (3). Carefully slide the parts of the packing (2) over the plug stem (9) into the packing chamber, see chapter **Change packing**.

i) Screw in the threaded bushing (1) and tighten.

j) Follow the assembly instructions found in chapter **Separating the valve from the actuator**.

(Cont'd)

2.2tf506823.en

(Cont'd)

Disassembly - Diverting Valve

a) Separate the actuator from the valve as described in chapter **Separating the valve from the actuator**.
If the actuator stem extends, first apply a pressure which exceeds the lower range value to the actuator (see nameplate).

b) Screw out the threaded bushing (1).

c) Remove the nuts (6) and the flange (7).

d) Lift the valve bonnet (5) over the plug stem (9) off the valve body (15). Check the gasket (8) in the valve body for damages. It is recommend that the gasket is replaced.

e) Hold the plug stem (9) from above in place using an appropriate tool on the hexagon head socket of the plug stem. Remove the screw (14) from below. Pull the screw and washer (13), the lower plug (18) as well as the sleeves (10, 11 and 12) from below out of the valve body (15) and the plug stem as well as the upper plug (17) from above.

f) First, screw out the upper seat (16) and then the lower seat (19) using a seat tool (see chapter **Spare Parts**, section **Tools**).

g) Clean all the parts thoroughly and replace as necessary.

(Cont'd)

2.2tf506823.en

(Cont'd)

Assembly - Diverting Valve

Apply lubricant (see chapter **Spare Parts**, section **Tools**) to the thread and the sealing conus of the new or the old, reworked seats as well as to the end of the thread of the screw (14).

a) Use a seat tool (see chapter **Spare Parts**, section **Tools**) to screw in the lower seat (19) first and subsequently the upper seat (16). Observe the tightening torque as indicated in the table below.

b) Keep the following order to slide the serrated lock washer (13), the lower plug (18) and sleeves (10, 11 and 12) on the screw (14). Insert all together into the valve body (15) from below and press in. Insert the upper plug (17) from above and screw on the plug stem (9).

c) Hold the plug stem (9) in place using an appropriate tool on the hexagon head socket of the plug stem and tighten all the parts with the screw (14).

d) Apply lubricant (see chapter **Spare Parts**, section **Tools**) to the plug stem (9) and the individual parts of the packing (2).

e) Place the valve bonnet (5) with flange (7) over the plug stem (9) on the valve body (15) and secure with nuts (6). Observe the tightening torques as indicated in the table below.

f) First, insert the spring (4) and then the washer (3). Carefully slide the parts of the packing (2) over the plug stem (9) into the packing chamber, see chapter **Change packing**.

g) Screw in the threaded bushing (1) and tighten.

h) Follow the assembly instructions found in chapter **Separating the valve from the actuator**.

2.2tf506823.en

Tightening torques		
DN	Seat thread mm Tight. torque ±10%	Body nuts (18) Tight. torque +10%
15...25 (1/2...1")	M32 x 1.5 120 Nm	M10 20 Nm
32...50 (1 1/2...2")	M58 x 1.5 500 Nm	M12 35 Nm

Actuator 3372 I/P

Separating the Valve From the Actuator

DANGER!

Risk of electroshock!
Make sure before dismantling, that all circuits are shut off and that all wires are disconnected.

WARNING!

Risk of injury!
Make sure before dismantling, that the pipeline is drained and free from media. Also, if necessary, allow the control valve to cool down or warm up to ambient temperature prior to starting any work on the valve.

Note! On dismantling an actuator with **"Actuator stem extends" (NC)** and especially when an actuator has pretensioned springs, first apply pressure slightly above the lower bench range value (see nameplate on actuator) to the loading pressure connection on the lower diaphragm chamber.

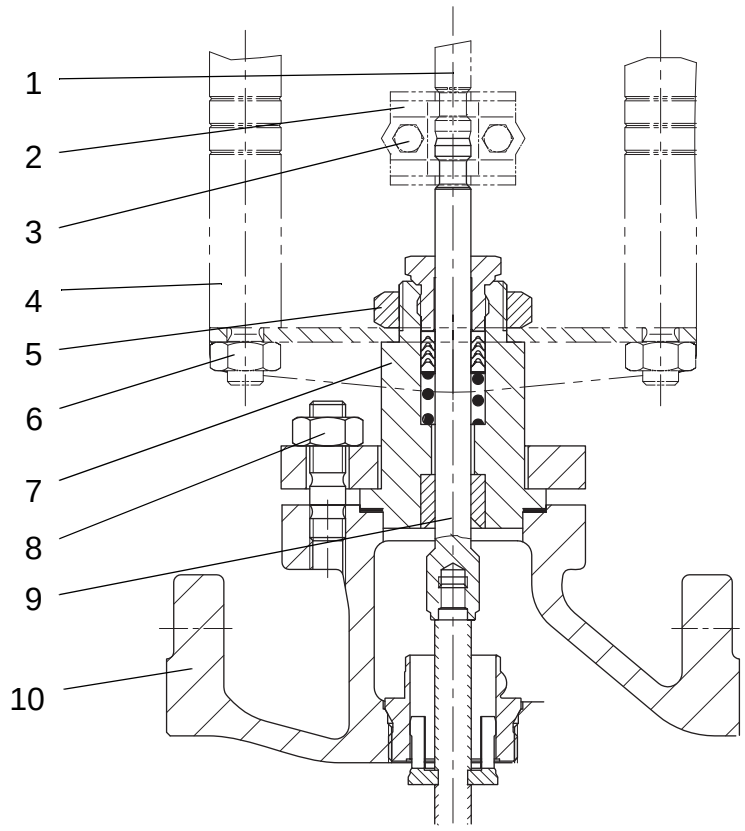

2.2tf506823.en

1 Actuator stem
2 Stem connector
3 Screw
4 Rod-type yoke
5 Hexagonal nut
6 Yoke nuts
7 Valve bonnet
8 Nuts
9 Plug stem with plug
10 Valve body

(Cont'd)

(Cont'd)

120 cm² Diaphragm

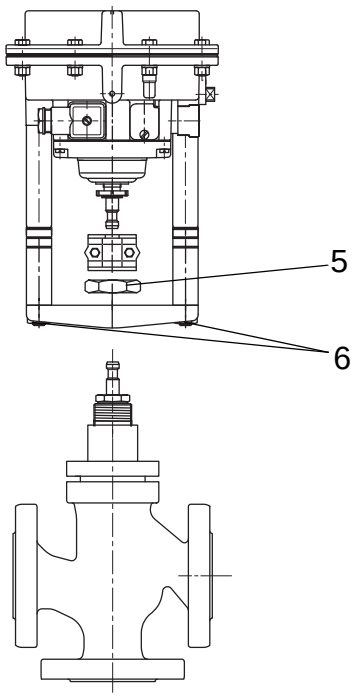

5 Hexagonal nut
6 Yoke Nut

2.2tf506823.en

Caution! Do not under any circumstances undo the yoke nuts (6) on the rod-type yoke (4) of actuators with 120 cm² diaphragm areas.

Disassembly

a) Disconnect all electrical wires and the signal pressure connection from the actuator.

b) Remove screws (3) from the stem connector (2).

c) Remove the hexagonal nut (5) from the valve bonnet (7).

d) Lift the actuator off the valve bonnet (7).

Assembly

a) Slightly retract the actuator stem (1) and place the actuator with its rod-type yoke (4) on the valve bonnet (7). Secure with the nuts (6) and the hexagonal nut (5). Observe a tightening torque of at least 150 Nm for the hexagonal nut (5).

b) **Extend** or **retract** the actuator stem (1) until it touches the plug stem (9).

c) Position the stem connector clamps (2) and fasten the screws (3) tight.

Note! **Always** re-calibrate the zero point when the actuator and the valve have been separated, see chapter **Checking - Adjusting Zero and Span**.

Change Actuator

a) Remove the actuator as described in chapter **Separating the valve from the actuator**.

b) Change actuator.

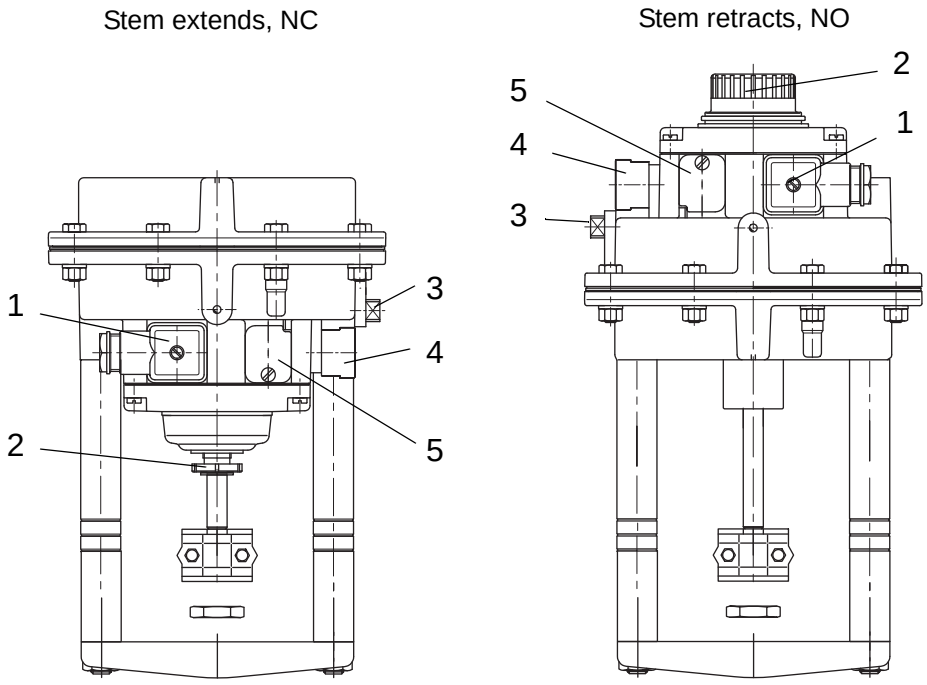

2.2tf506823.en

1 Plug connector
2 Zero adjuster
3 Stopper (Pressure gauge)
4 Vent plug
5 Cover plate
(span and tight closing function)

c) **For the electro-pneumatic actuator (NC):**
Apply a pressure of approximately 3 bar to the “Supply” connection and additionally connect a control signal of approximately 10 mA to retract the actuator stem.

For the electro-pneumatic actuator (NO):
If necessary, pressurize the top diaphragm chamber until the plug stem and actuator stem come in contact so that the stem connector can be mounted.

d) Follow the assembly instructions found in chapter **Separating the valve from the actuator**.

Change Diaphragm and Spare Parts

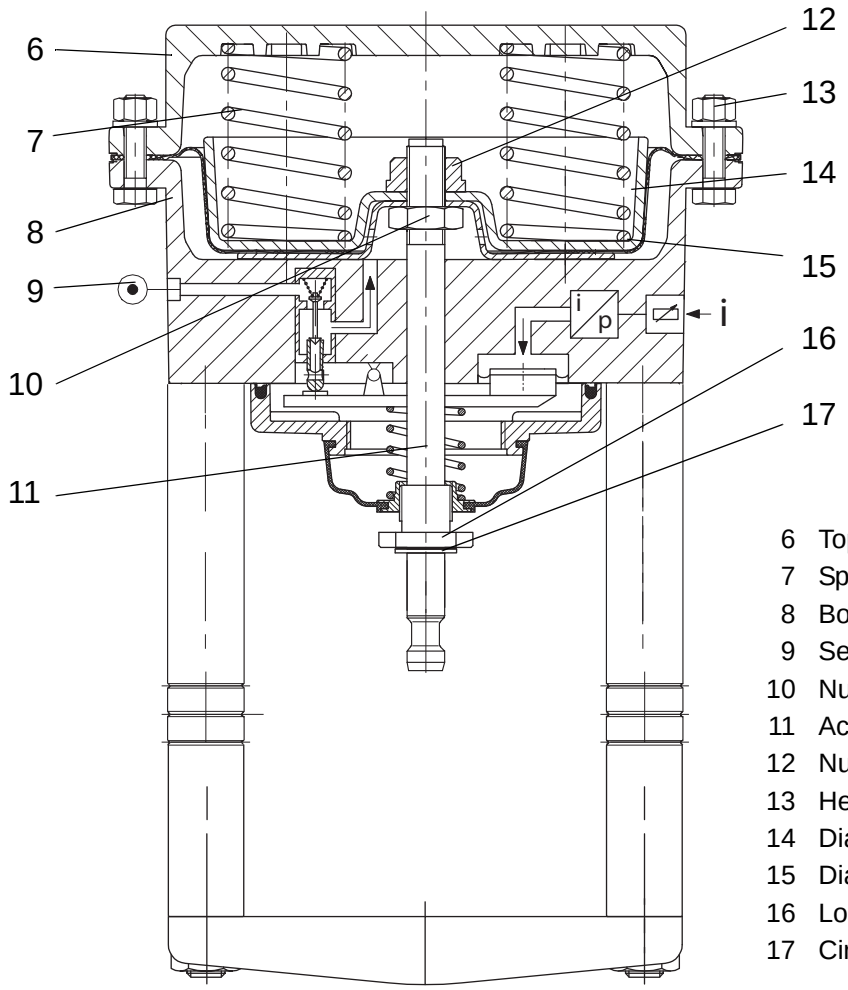

6 Top actuator case
7 Springs
8 Bottom actuator case
9 Seal
10 Nut
11 Actuator stem
12 Nut
13 Hexagonal bolts and nuts
14 Diaphragm plate
15 Diaphragm
16 Lock washer
17 Circlip

2.2tf506823.en

(Cont'd)

(Cont'd)

a) Separate the actuator from the valve as described in chapter **Separating the valve from the actuator**.

b) Unscrew the hexagonal bolts and nuts (13) connecting both actuator cases.

WARNING! **Risk of injury!**
Loosen the short bolts first, **then slowly and in a criss-cross pattern the long bolts and nuts until the actuator springs are relieved of tension**.

Caution! Take special care with actuators whose springs have been pre-loaded at the factory, distinguished by the bolts and nuts on the bottom diaphragm case.

c) Lift off the top actuator case (6).

d) Remove the springs (7), (NC version - only).

e) Remove the circlip (17), (NC version - only).

f) Pull the actuator stem (11), diaphragm plate (14) and diaphragm (15) out of the bottom actuator case (8).

g) Remove the nut (12) and pull off the diaphragm plate.

Note! Do not touch the lower nut (10).

h) Change diaphragm (15).

i) Assemble the actuator in reversed order.

Note! Align the top actuator case flanges with the flanges of the bottom actuator case before reattaching the hexagonal bolts and nuts.

2.2tf506823.en

Checking - Adjusting Zero and Span

Electro-pneumatic Actuator Only

Note! Make adjustments on the mounted valve only.

Zero and span are adjusted to determine the starting point and the upper range value of the actuator. When the control signal (reference variable) issued by the controller changes from 4 to 20 mA, the control valve must correspondingly pass through its entire travel range from 0 to 100 %. Zero adjustment is always based on the closed position of the control valve.

	Closed fail-safe position, (NC)	**Open fail-safe position, (NO)**
Zero	4 mA	20 mA
Upper range	20 mA	4 mA

Note! Zero and span of the electro-pneumatic actuator are adjusted to rated travel by the manufacturer. We recommend, however, that you check zero after the actuator has been attached to the valve. Proceed as described below:

a) Connect an ammeter to the control signal input and apply compressed air to the "Supply" input.

b) Loosen the fastening screw and push the cover plate (2) aside.

c) Pull the jumper (3) from the pins to deactivate the tight-dosing function.

Zero is adjusted on the adjuster (1) and the upper range value on the potentiometer for span (4).

Note! Any span adjustment results in a shift of zero. Therefore, the zero point must be readjusted after span adjustment.

2.2tf506823.en

Adjusting Actuators with Fail-Safe Position "Actuator Stem Extends" (NC)

Zero Point (Starting Point)

a) Use an ammeter to adjust the input signal to 4 mA.

b) Turn zero adjuster (1) until the plug stem just begins to move from its rest position.

c) Switch off the input signal and then slowly increase it again. Check if the plug stem begins to move at 4 mA.

d) Correct any deviations via the zero adjuster (1). Turning clockwise causes the valve to leave its rest position earlier, whereas turning counterclockwise delays the valve leaving its rest position.

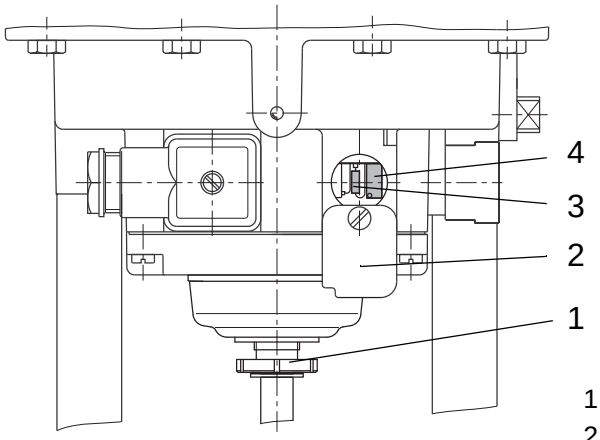

1 Zero adjuster
2 Cover plate
3 Jumper
4 Potentiometer for span

2.2tf506823.en

Upper Range Value

e) After the starting point has been adjusted, use the ammeter to increase the input signal to 20 mA. When reaching the upper range value of 20 mA, the plug stem must have passed through its entire rated travel range of 100 %.

f) Adjust the potentiometer for span (4) until the upper range value is correct. Turning clockwise increases the travel, turning counterclockwise reduces the travel.

g) After correction, switch off the input signal and slowly increase it again. First check the starting point (4 mA), then the upper range value (20 mA).

h) Repeat the correction procedure until both values are correct.

i) Plug jumper (3) on the pins again to activate the tight-closing function.

Adjusting Actuators with Fail-Safe Position "Actuator Stem Retracts" (NO)

Zero Point (Starting Point)

a) Use ammeter to adjust the input signal to 20 mA.

b) Remove the protective cap (5) and turn the zero adjuster (1) until the plug stem just begins to move from its rest position.

c) Increase the input signal and slowly reduce it again to 20 mA. Check if the plug stem begins to move at 20 mA.

d) Correct any deviations via the zero adjuster (1). Turning counter-clockwise causes the valve to move from its rest position with delay, whereas turning clockwise causes the valve to move earlier.

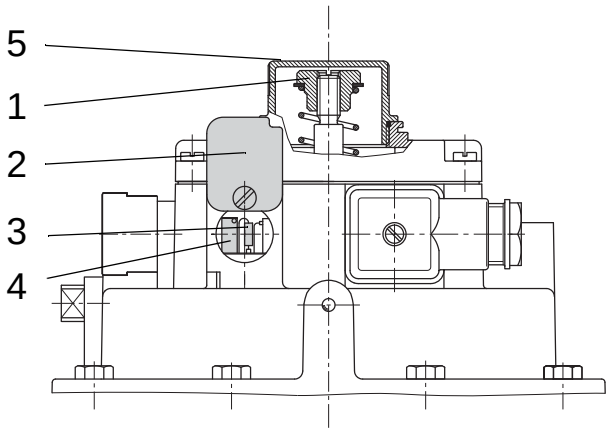

1 Zero adjuster
2 Cover plate
3 Jumper
4 Potentiometer for span
5 Protective cap

2.2tf506823.en

Upper Range Value

e) After the starting point has been adjusted, use the ammeter to adjust the input signal to 4 mA. When reaching the upper range value of 4 mA, the plug stem must have passed through its entire rated travel range of 100 %.

f) Adjust the potentiometer for span (4) until the upper range value is correct. Turning clockwise increases the travel, and turning counterclockwise reduces the travel.

g) After correction, increase the input signal again. First check the starting point (20 mA), then the upper range value (4 mA).

h) Repeat the correction procedure until both values are correct.

i) Put the protective cap (5) back over the zero adjuster.

j) Plug the jumper (3) on the pins again to activate the tight-closing function.

Spare Parts

Valve 3323

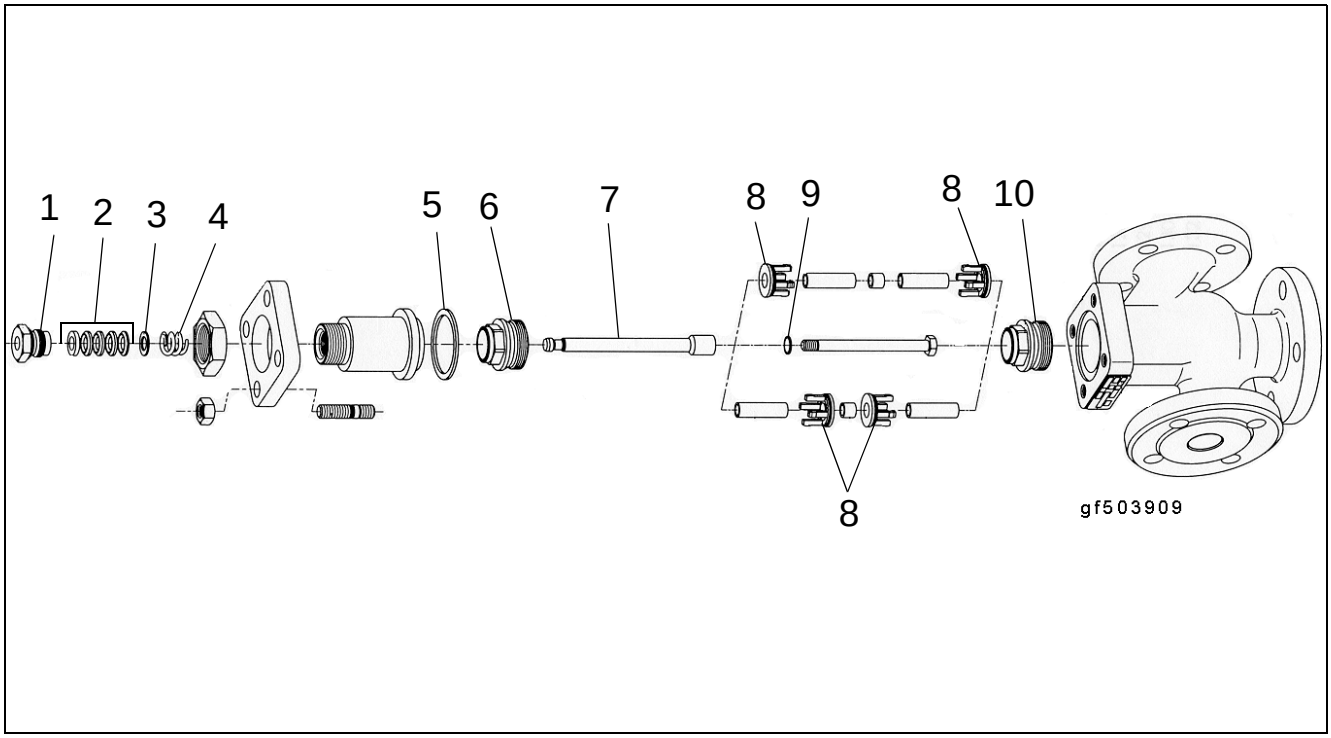

1.0tf506824.en

Description Spare part kit, valve	Spare part article No.	Included parts	Pos.	Qty.
DN 15, NC linear DN 20, NC linear DN 25, NC linear ANSI 1/2”, NC linear ANSI 3/4”, NC linear ANSI 1", NC linear	6-990425-40	Bushing Sealing box V-ring Washer sealing box Spring sealing box Seal Seat 2 Plug stem Cone Safety washer Seat 1	1 2 3 4 5 6 7 8 9 10	1 1 1 1 1 1 1 2 1 1
DN 32 NC linear DN 40 NC linear DN 50 NC linear ANSI 1 1/2” NC linear ANSI 2" NC linear DN 50, Divert. NO linear	90511-0183			

Actuator 3372 I/P

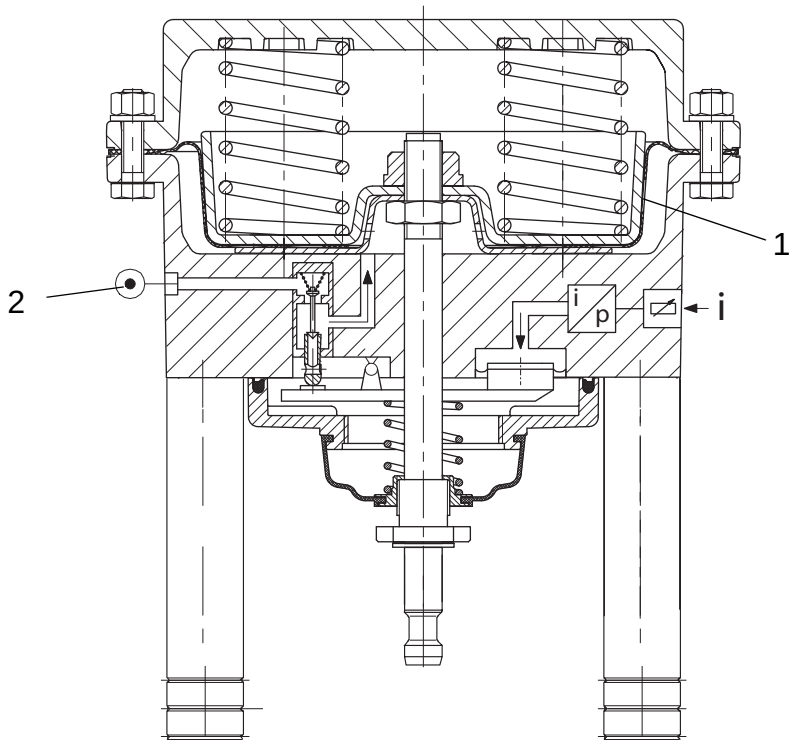

1.0tf506824.en

Description Spare part kit, actuator	Spare part article No.	Included parts	Pos.	Qty.
120 cm^2	6-990418-58	Diaphragm Seal	1 2	1 1

Description Actuator, complete unit	Spare part article No.	Included parts	Pos.	Qty.
120 cm^2, NC Stroke 15 mm	6-990425-47	-	-	1
120 cm^2, NO Stroke 15 mm	90503-7712	-	-	1

Tools

Seat tool

Description Seat tool, complete	Spare part article No.	Included parts	Pos.	Qty.
DN 15-25	90512-6979	Nut Supporting flange Socket	-	1 1 1
DN 32-50	90512-6980	Nut Supporting flange Socket	-	1 1 1
DN 65-80	90512-6981	Seat tool, complete	-	1
DN 100	90512-6982	Seat tool, complete	-	1

Torque wrench

Description Torque wrench	Spare part article No.	Included parts	Pos.	Qty.
10 - 100 Nm	90512-6983	-	-	1
50 - 300 Nm	90510-4303	-	-	1
Torque multiplyer, IP30, 3000 Nm	90510-4302	-	-	1

1.0tf506824.en

Lubrication

Description Lubrication	Spare part article No.	Included parts	Pos.	Qty.
Greese	90512-7283	-	-	1

This page intentionally left blank

1.0tf506824.en

Tetra Pak

Maintenance & Spare Parts

Regulating valve

(Bürkert)

8802YG/GB/GD/DD/DF/PD



1.0 1226927-0101.fro

Tetra Pak

Doc No. 1226927-0101

Regulating valve

8802YG/GB/GD/DD/DF/PD

This document refers to components specified in Technical Manual, on Maintenance & Spare Parts CD/DVD or on Tetra Pak Intranet.

1.0 1226927-0101.fro

Version 09 Issue 2016-10

Doc No. 1226927-0101

Tetra Pak

Tetra Pak Processing Systems AB

Function Description 1

Type 1

Control function 1

Bürkert 8693 wiring connection 1

Bürkert 8693 operator panel 4

Bürkert 8693 setup 5

Maintenance 6

Operating stage 7

Valve type 2300 & 2301 8

Remove the control cone set 8

Replacing the valve set 11

Valve type 8802YG: Globe valve 13

Disassembly 13

Replacing the valve seat 14

Replacing the control cone 15

Replacing Packing Gland 17

Valve type 8802DF: Diaphragm valve 19

Replacing the diaphragm 19

Remote sensor 8798 21

Attachment to valve type 2300, 2301 21

Positioner type 8792 without PID/8793 with PID 24

Connect to remote sensor 24

Starting up type 8694 26

Starting up type 8692, 8792, 8793 29

(Cont'd)

(Cont'd)

Pneumatic connection **34**
Valve type 2300, 2301 34
Valve type 2712 35
Cleaning **36**
Troubleshooting **36**

Spare Parts **37**

Valve Type 2300 . . . . . **37**
Valve Type 2301 . . . . . **38**
Valve Type 2712 . . . . . **40**
Valve Type 2103 . . . . . **42**
Packing Gland **43**
Actuator, Valve Type YG/GB/GD/DD/DF **44**
Actuator, Valve Type PD **45**
Side control 8792 without PID **46**
Position Sensor 8798 . . . . . **47**
Side Control 8793 with PID **48**
Position Sensor 8694 . . . . . **49**
Replacement Kit 8694, 8692, 8693 . . . . . **50**
Assembly Tools **51**

Function Description

Type

8802YG: Angle-seat valve. ELEMENT continuous control system.
Consists of valve type 2300.

8802GB: Globe valve. CLASSIC continuous control system.
Consists of valve type 2712.

8802GD: Globe valve. ELEMENT continuous control system.
Consists of valve type 2301.

8802DD: Diaphragm valve. CLASSIC continuous control system.
Consists of valve type 2731.

8802DF: Diaphragm valve. ELEMENT continuous control system.
Consists of valve type 2103.

8802PD: Quarter turn actuator continuous control.
Consists of actuator 100C and positioner.

Control function

2.2tf507614.en

The seat of the valve is always closed against the medium flow.

Spring force (SFA) or pneumatic control pressure (SFB and SFI) generates the closing force on the control cone. The force is transferred via a spindle which is connected to the actuator piston.

Function A

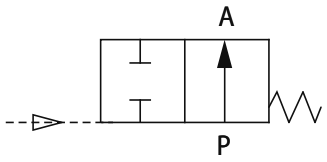

Function B

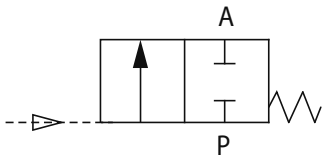

Function I

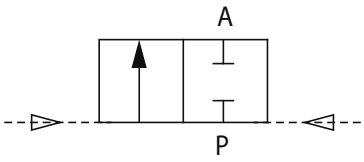

- Control function A (SFA) = normally closed
- Control function B (SFB) = normally open
- Control function I (SFI) = double-acting

Bürkert 8693 wiring connection

Power supply connection 24 VDC

Terminal	Configuration	External circuit
14	Operating voltage +	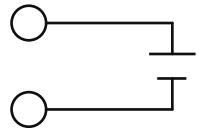 24 V DC +/- 10% max residual ripple 10%
13	Operating voltage GND	

Input from transmitter

Input type*	Pin	Configuration	Switch	External circuit
4-20mA - internally supplied	1 2 3 4	+24V transmitter supply Output from transmitter GND Bridge after GND (GND from 3-wire transmitter)	Switch on left 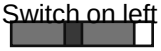	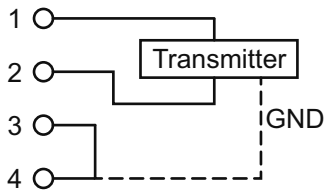
4-20mA - externally supplied	1 2 3 4	Not assigned Process actual + Not assigned Process actual -	 Switch on right	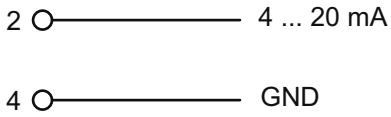

Input from setpoint adjustment

Terminal	Configuration	External circuit
11 10	Set-point value + Set-point value GND	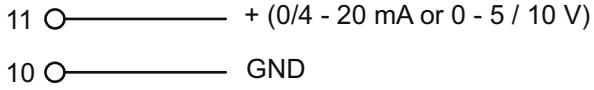
12 13	Binary input + (optional input) Binary input GND (optional input)	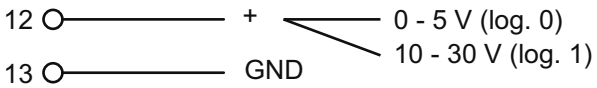

2.2tf507614.en

Binary output/feedback

Terminal	Configuration	External circuit
9	Analogue position feedback +	9 → + (0/4 - 20 mA or 0 - 5 / 10 V) completely galvanically isolated
8	Analogue position feedback GND	8 → GND
5	Binary output 1	5 — 24 V / 0 V NC / NO
6	Binary output GND	6 — GND
7	Binary output 2	7 — 24 V / 0 V NC / NO
6	Binary output GND	6 — GND

(Cont'd)

(Cont'd)

Therminal block

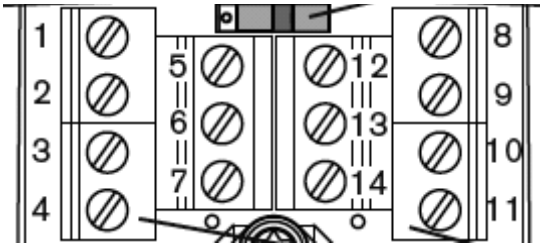

2.2tf507614.en

Bürkert 8693 operator panel

Manual mode

In manual operating state, the valve can be opened and closed manually via the arrow key (OPN/CLS).

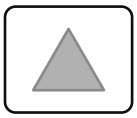	Press the up arrow key: Aerate the actuator Control function A (SFA): Valve opens Control function B (SFB): Valve closes Control function I (SFI): Connection 2.1 aerated
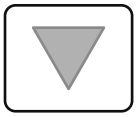	Press the down arrow key: Deaerate the actuator Control function A (SFA): Valve opens Control function B (SFB): Valve closes Control function I (SFI): Connection 2.2 aerated

Auto mode

Normal controller mode is implemented and monitored in automatic operating state.

	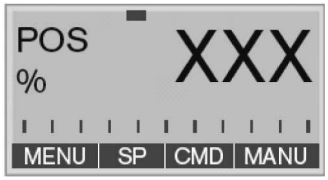	Display of actual position of the valve actuator (0 - 100%).
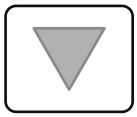	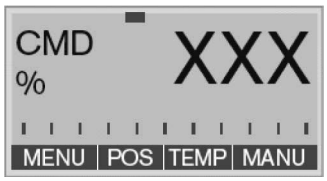	- Display of nominal position of the valve actuator or - Display of nominal position of the valve actuator after rescaling by possibly activated split range function or correction characteristic (0 - 100%).
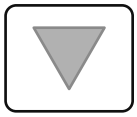	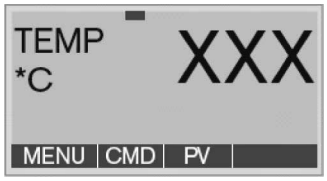	Internal temperature in the housing of the positioner (°C).
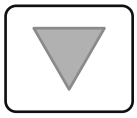	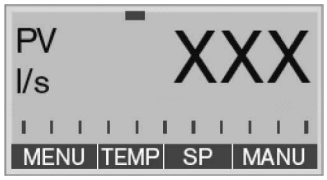	Process actual value.
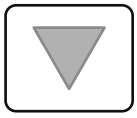	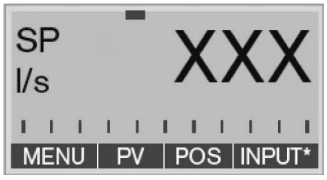	Process set-point value.

2.2tf507614.en

Bürkert 8693 setup

Standard PID settings

Parameter:	Default settings:	Level settings:
(2) KP:	1	2
(3) TN:	999,9	0,5
(4) TV:	0,0	0,0
(5) XO:	0,0 %	0,0 %
(6) Filter:	0	0
(7) PV Input:	4-20mA	4-20mA
(8) PV Scale:	PVmin [0] @0/(4)mA PVmax [100] @20mA K-factor [1,0]	PVmin [0] @0/(4)mA PVmax [100] @20mA K-factor [1,0]
(9) SP Input:		Extern
(10) SP Scale:	SP min [0] @0 V SP max [700] @10 V	SPmin [0] @0 V SP max [100] @10 V
(11) P.CO Init:	Bumpless	Bumpless

2.2tf507614.en

Maintenance

DANGER!

Risk of injury from discharge of medium and pressure!
It is dangerous to remove a device which is under pressure, due to the sudden release of pressure or discharge of medium.
Before removing a device, switch off the pressure and vent the lines.

WARNING!

Risk of injury if the wrong tools are used!
It is dangerous to use unsuitable tools for installation work as the device may be damaged.
To remove the actuator from the valve housing, use an open-end wrench, never a pipe wrench.

WARNING!

Danger if incorrect lubricants are used!
Unsuitable lubricant may contaminate the medium. In oxygen applications there is a risk of an explosion!
In specific applications, e.g. oxygen or analysis applications, use appropriately authorized lubricants only.

2.2tf507614.en

Operating stage

There are two operating stages, AUTOMATIC and MANUAL, default operating stage is AUTOMATIC. To switch between AUTOMATIC and MANUAL use the selection key (1) to the right. Current operating stage can be seen in the display (2).

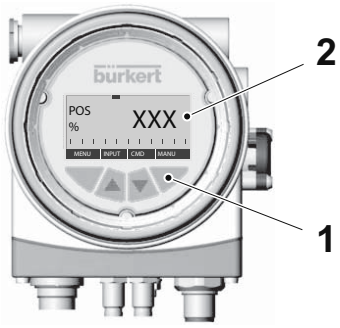

AUTOMATIC

Normal controller mode is implemented and monitored in AUTOMATIC controller mode. AUTOMATIC mode can be identified by the bar running along the upper edge of the display, see picture below.

Display for AUTOMATIC mode:
Bar running from left to right

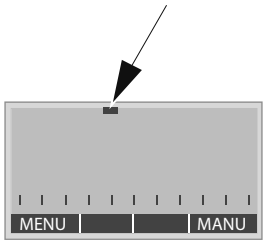

MANUAL

In MANUAL operating stages the valve can be opened and closed manually via the arrow keys OPN/CLS (3).

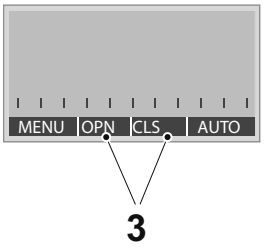

2.2tf507614.en

Valve type 2300 & 2301

Remove the control cone set

2300 2301

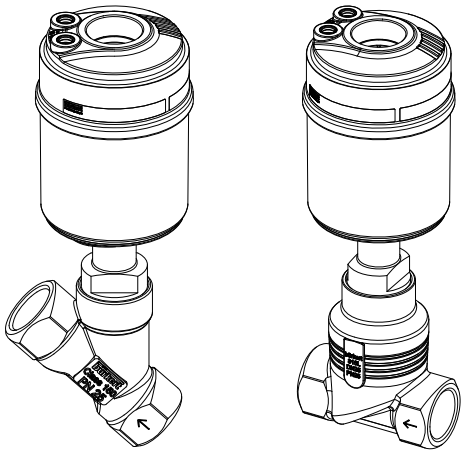

Before the control cone set can be replaced, the actuator must be removed from the valve housing.

Removing the actuator from the valve housing

Note! Power supply is necessary!

In manual mode, use the arrow keys (OPN/CLS) to set a position (POS value) of 50% to avoid that the valve seat being damaged.

2.2tf507614.en

WARNING!

Risk of injury from discharge of medium and pressure
If the direction of rotation is wrong, the body interface may become detached. Rotate the actuator in specified direction only.

Control functions B and I: For control functions B and I it is not necessary to switch on compressed air for the removal.

a) Remove actuator when the valve is in open position.

b) Remove nipple thread from the valve housing with an open-end wrench.

(Cont'd)

(Cont'd)

Replace the control cone set

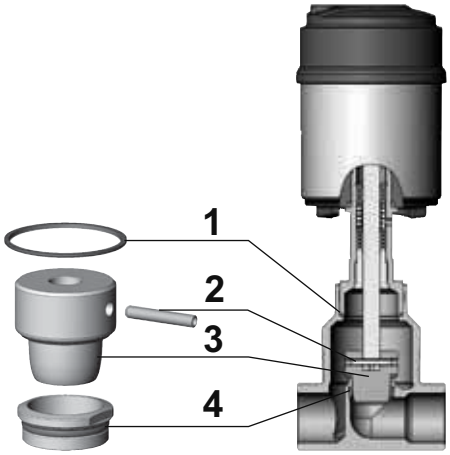

1 Graphite seal
2 Dowel pin
3 Control cone
4 Valve seat (Not included in the control cone set.)

a) Knock out dowel pin (2) with a suitable pin punch.
Pin punch ø 4 mm, for spindle diameter 10 mm.
Pin punch ø 5 mm, for spindle diameter 14 mm.

b) Remove control cone (3).

c) Attach new control cone to the spindle.

d) Align bores of the control cone and spindle.

e) Support control cone on the cylindrical part with the aid of a prism or something similar.

f) Put on dowel pin (2) and carefully knock in with a hammer.

g) Position the dowel pin in the centre of the spindle axis.

(Cont'd)

2.2tf507614.en

(Cont'd)

Install the actuator module on the valve housing

a) Grease nipple thread before reinstalling the actuator (e.g. with Klüber paste UH1 96402).

b) If required, replace graphite seal (1).

c) **Control function A:** Pressurize control air connection of the activation unit with compressed air (5 bar) so that the control cone is lifted off the valve seat and is not damaged when screwed in.

d) Screw actuator module into the valve housing.
Observe tightening torque (see table “Tightening torques of valve housing / nipples” below).

Tightening torques of valve housing / Nipples

DN	Tightening torque (Nm)
13	45 ±3
15	
20	50 ±3
25	60 ±3
32	65 ±3
40	65 ±3
50	70 ±3

2.2tf507614.en

Replacing the valve set

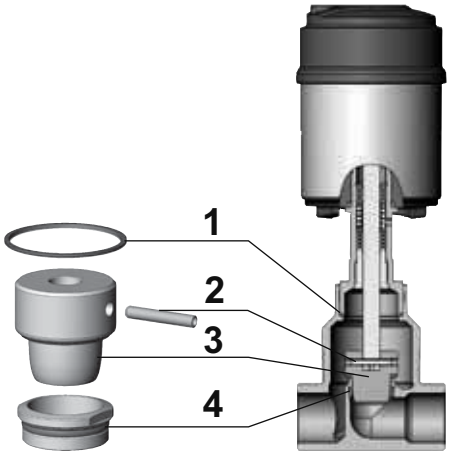

1 Graphite seal
2 Dowel pin
3 Control cone
4 Valve seat (Not included in the control cone set.)

Note! When replacing the valve set, the control cone must also be exchanged. For this procedure, the valve housing must be removed. The necessary work steps are described in the previous subchapter “Replacing the control cone set”.

First, remove the actuator and exchange the control cone as described in previous chapter. Continue to replace the valve seat as follows:

a) Unscrew the old valve seat (4) using the assembly tool (7) and a spanner.

b) Clean the thread of the housing and the surface of the graphite seal (1) with compressed air.

(Cont'd)

2.2tf507614.en

(Cont'd)

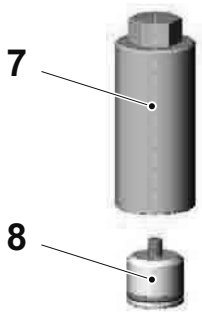

7 Assembly tool
8 Tool insert

c) Select the correct tool insert (8) and screw it into the assembly tool (7).

d) Place the new valve seat (4) onto the assembly tool (7).

e) Grease the thread of the valve seat with stainless steel lubricant (e.g. with Klüber paste UH1 96402).

f) Manually screw the fitted valve seat into the thread of the housing.

g) Screw the valve seat in place using a torque wrench. Observe the tightening torque (see following table “Tightening torques for valve seat installation”).

Tightening torques for valve seat installation

DN	Tightening torque (Nm)
4-15	25 ±3
20	35 ±3
25	50 ±5
32	80 ±5
40	100 ±8
50	120 ±8
65	150 ±10

2.2tf507614.en

Install the actuator module on the valve housing

The necessary work steps are described in the previous subchapter “Replacing the control cone set”.

Valve type 8802YG: Globe valve

Disassembly

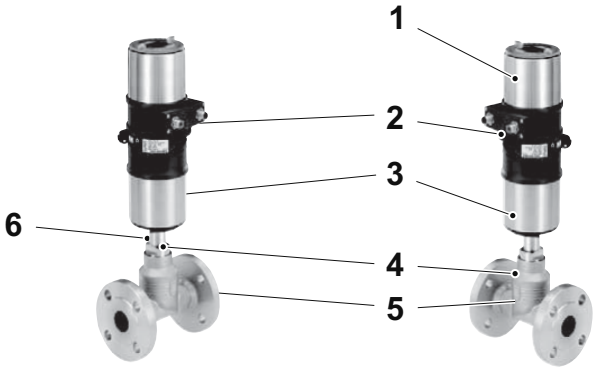

1 Top control
2 Lower control port
3 Actuator
4 Threaded nipple
5 Housing
6 Screw

a) Remove the electrical and pneumatic supplies from the top control (1)

b) Pull off the pneumatic hose between top control (1) and actuator 3) at the control port (2) of actuator.

c) Remove the actuator in the open valve position by unscrewing the threaded nipple (4) from the housing (5). Do not loosen screw (6) above threaded nipple!

2.2tf507614.en

Replacing the valve seat

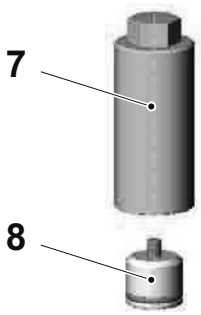

7 Assembly tool
8 Tool insert

a) Unscrew the old seat using the assembly tool (7) and a spanner.
b) Clean thread and sealing surface in the housing with compressed air.
c) Select a tool insert (8) and screw it into the assembly tool (7).
d) Push the new seat onto the assembly tool (7).
e) Lubricate with high-temperature resistant lubricant (e.g. Klüberpaste UH1 96402 3).
f) Place the attached seat by hand into the housing thread and screw it in.
g) Tighten the seat with a torque wrench to the torque specified in table below.

Tightening torques for valve seat installation 2301

DN	Tightening torque (Nm)
10 15	25^{+3}
20	35^{+3}
25	50^{+5}
32	80^{+5}
40	100^{+8}
50	120^{+8}
65	150^{+10}
80	180^{+10}
100	220^{+10}

2.2tf507614.en

Replacing the control cone

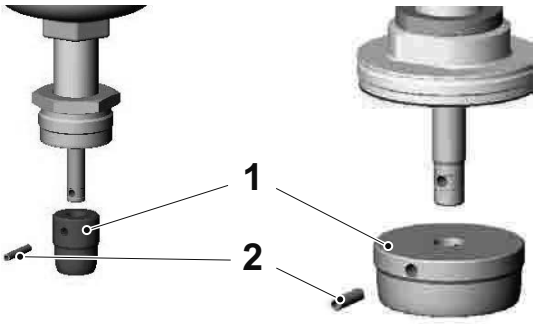

1 Control cone
2 Dowel pin

a) Knock out the dowel pin (2) with a suitable driver.

b) Clamp two equally long metal bars to the left and right of the spindle between control cone (1) and threaded nipple of actuator.

c) Apply compressed air (6 bar) to the lower control port of actuator.

d) Pull off control cone (1) with the aid of the metal bars.

e) Push the new control cone (1) over the end of the spindle. Do not damage the sealing surface or the control contour!

f) Align the bores to each other.

g) Support the control cone (1) at its cylindrical part with the aid of a V-block or similar.

(Cont'd)

2.2tf507614.en

(Cont'd)

h) Position dowel pin (2) and knock it into the bore with a hammer.

i) Bring the dowel pin into a central position relative to the spindle axis.

j) Grease the thread with high-temperature resistant lubricant, e.g. Klüberpaste UH1 96402. Valve must be open!

k) Tighten the threaded nipple.

l) **Valves with actuator 175C, 225C mm:** Replace graphite seal if necessary.

m) Assemble the actuator in the reverse order to that described for disassembly.

Tightening torques for threaded nipple

DN	Tightening torque (Nm)
65	100 ±5
80	120 ±5
100	150 ±5

2.2tf507614.en

Replacing Packing Gland

Note! Applicable for on/off valves only.

WARNING! **Risk of injury!**
Make sure before dismantling, that the pipeline is drained and free from media.

Note! Before the packing gland can be replaced, the actuator must be removed from the valve body and the control cone removed. It is therefore advisable to make this action in connection with the replacement of the valve kit.

a) **If PEEK spindle guide:** Unscrew spindle guide (3) with the aid of the installation wrench (11) and an open-end wrench.
If VA spindle guide SP10/SP14: Unscrew spindle guide (3) with the aid of a modified socket wrench (12).
If VA spindle guide SP22: Unscrew spindle guide (3) with the aid of an open-end wrench.

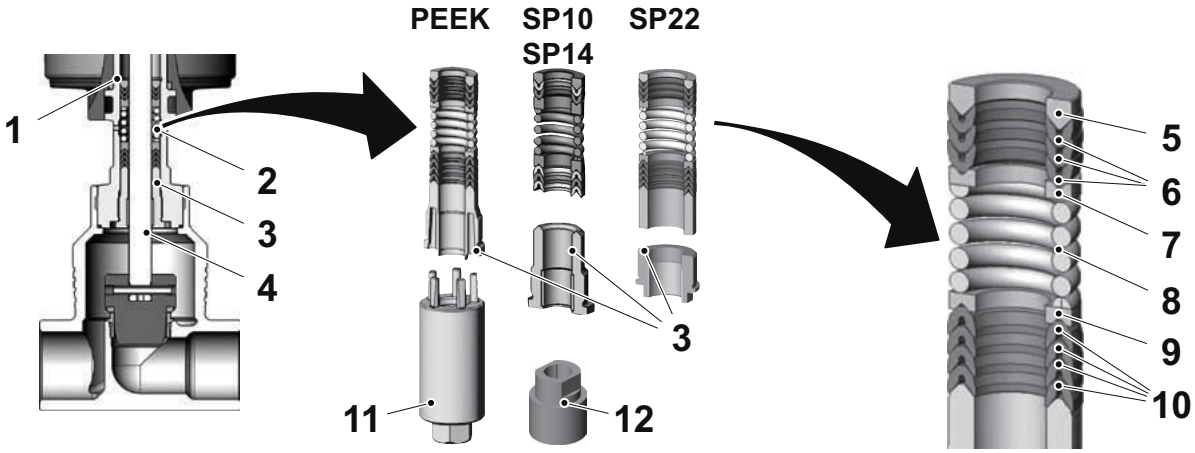

2.2tf5076l4.en

1 Packing gland tube
2 Packing gland
3 Spindle guide
4 Spindle
5 Support ring
6 Upper gaskets
7 Upper pressure ring
8 Pressure spring
9 Lower pressure ring
10 Lower gaskets
11 Installation wrench
12 Socket wrench

(Cont'd)

(Cont'd)

b) Press out packing gland:
Place spindle on a firm base and pressurize with 6-8 bar,
– if control function A or I, at pilot air port 1.
– if control function B, at pilot air port 2.

WARNING!

Risk of injury from parts jumping out!
When the spindle opening is exposed, the individual parts of the packing gland are pressed out with speed when the pilot air ports are pressurized.

c) Grease the individual parts of the new packing gland with supplied lubricant.

d) Connect the individual parts to the spindle in the specified direction and sequence.

e) Push packing gland into the packing gland tube.

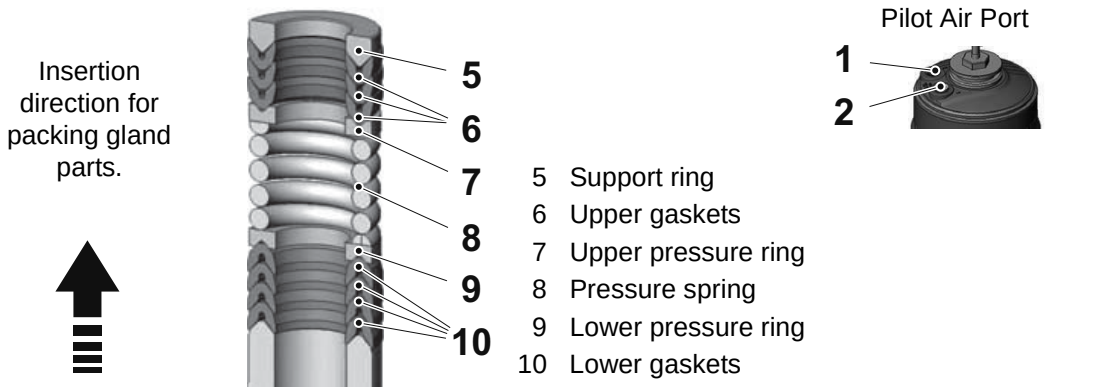

2.2tf507614.en

f) Grease spindle guide thread with supplied lubricant.

g) Screw spindle guide back in. Tightening torques of spindle:

Spindle diameter	Orifice body	Material of the spindle guide	Tightening torque (Nm)
10 mm		PEEK	6
	10/15	1.4401 / 1.4404 / 316L	15
	20/25		25
	32		50
14 mm		PEEK	15
	25	1.4401 / 1.4404 / 316L	25
	32 – 50		60
22 mm	65 – 100	1.4401 / 1.4404	60

Valve type 8802DF: Diaphragm valve

Replacing the diaphragm

On the fluidic side, there is the possibility of replacing the sealing diaphragm in case of wear or damage. For this purpose, the actuator must be disassembled from the housing and reassembled.

With welded-on housings, make absolutely sure that the actuator and diaphragm are removed before welding.

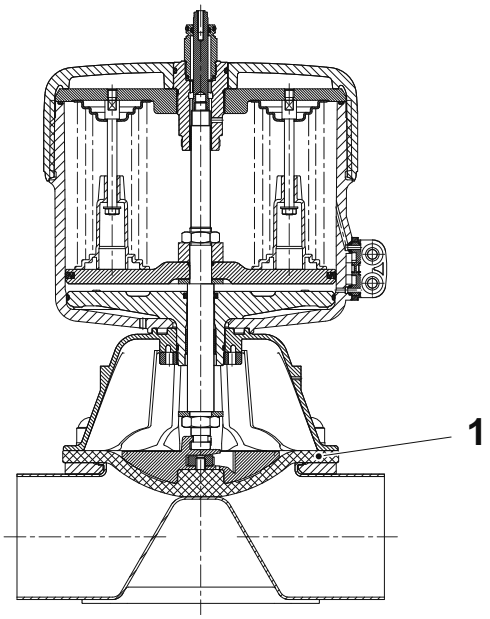

1 Diaphgragm

2.2tf507614.en

Procedure

a) **Control function A:** Pressurize the lower control connection of the actuator with compressed air (6 bar).
Control function B: With control function B, compressed air must not be applied.

b) Removing the actuator: Remove the actuator in the open position by unscrewing the housing screws from the housing.

c) Exchange the diaphragms (1).

(Cont'd)

(Cont'd)

d) Reinstalling the actuator (in open position). Place the actuator onto the housing and lightly tighten the housing screws over the diagonal until the diaphragm lies in contact between the housing and the actuator.

e) Tightening the housing screws to the specified torque.
Control function A: Pressurize the lower control connection of the actuator with compressed air (6 bar) twice and relieve again so that the valve switches.
Then tighten the housing screws without control pressure to the nominal torque given below (standard values).
Control function B: Pressurize the upper control connection of the actuator with compressed air and relieve again so that the valve switches.
Then tighten the housing screws with applied control pressure to the nominal torque given below (standard values).

Tightening torques for plastic housings (PV) and VA tubular housings (VA)

DN	Elastomer diaphragm	PTFE diaphragm
65	20 Nm	30 Nm
80	30 Nm	40 Nm
100	40 Nm	50 Nm

2.2tf507614.en

Remote sensor 8798

Attachment to valve type 2300, 2301

Install switch spindle

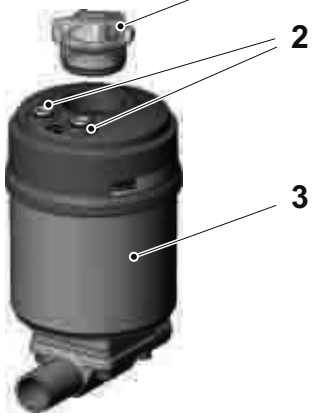

1 Transparent hood
2 Control air connections (plug-in hose connectors with collets or threaded bushings)
3 Actuator

a) Unscrew the transparent hood (1) on the drive and unscrew the position display (yellow cap) on the spindle extension (if present).

b) For version with plug-in hose connector, remove the collets (white nozzles) from both control air connections (2), if present.

(Cont'd)

2.2tf507614.en

(Cont'd)

c) Push the switch spindle (5) through the central screw (6).

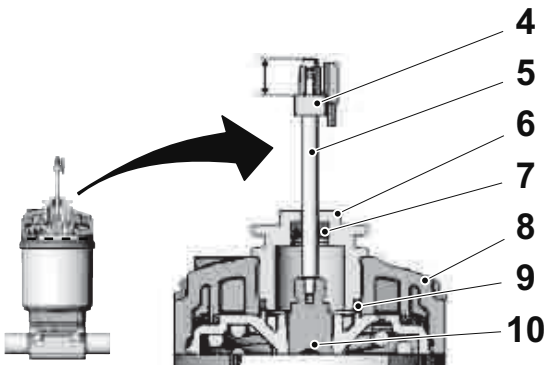

4	Puck holder	8	Actuator cover
5	Switch spindle	9	O-ring
6	Central screw	10	Spindle extension
7	Groove ring		

d) To secure the switch spindle, apply some screw locking paint (Loctite 290) in the tapped bore of the spindle extension (10) in the actuator (3).

e) Check that the O-ring (9) is correctly positioned.

f) Screw the central screw to the actuator cover (8) (maximum torque: 5 Nm).

g) Screw switch spindle onto the spindle extension. To do this, there is a slot on the upper side (maximum torque: 1 Nm).

h) Push puck holder (4) onto the switch spindle and lock into position.

(Cont'd)

2.2tf507614.en

(Cont'd)

Install remote sensor

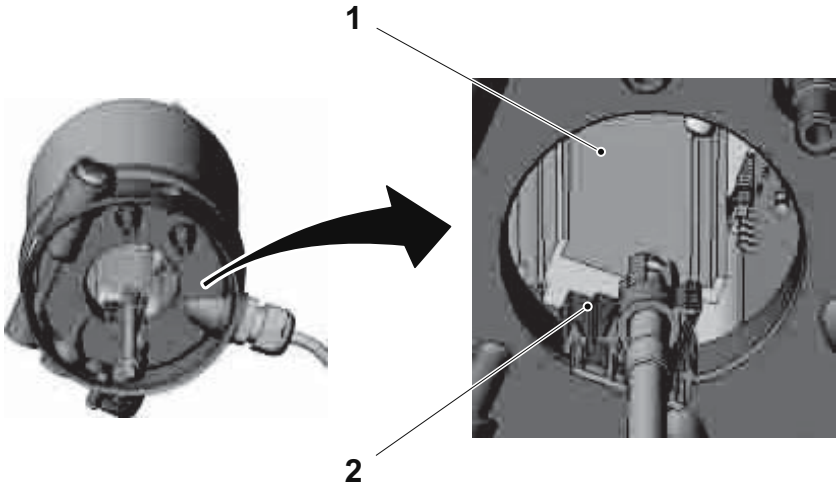

1 Guide rail
2 Puck holder

a) Push the remote sensor onto the actuator. The puck holder (2) must be aligned in such way that it is inserted into the guide rail (1) of the remote sensor.

b) Press the remote sensor all the way down as far as the actuator and turn it into the required position.

c) Attach the remote sensor to the actuator using the two side fastening screws (3) (tighten the screws hand-tight only. Maximum torque 0.5 Nm).



3 Fastening screws (2x)

2.2tf507614.en

Positioner type 8792 without PID/8793 with PID

Connect to remote sensor

WARNING!

Risk of electrical shock!
Make sure the power is off!

a) Connect the 4 wires of the sensor cable to the terminals on the positioner, according to the table below.

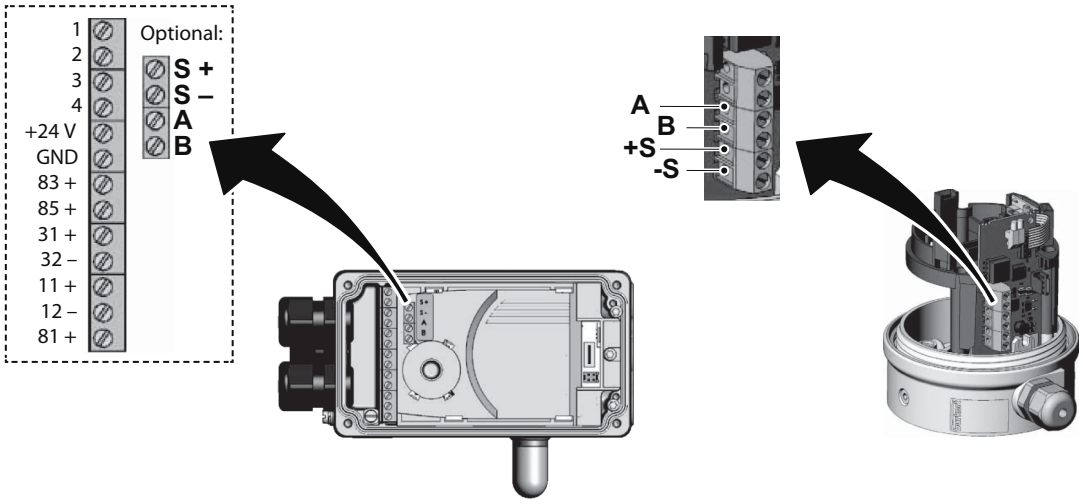

2.2tf507614.en

Terminal	Configuration	External circuit / Signal level
S+	Supply sensor +	+
S-	Supply sensor -	–
A	Serial interface, A cable	A line
B	Serial interface, B cable	B line

Remote Sensor 8798

b) Attach remote sensor 8798 on the actuator (see previous chapter).

Note! A normal sensor cable can be used to connect the devices.

(Cont'd)

(Cont'd)

c) Connect compressed air to the supply pressure connection (P) of the positioner .

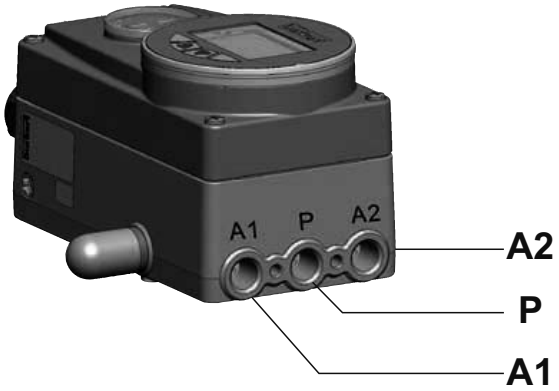

A1 Working connection 1
P Supply pressure connection
A2 Working connection 2

d) Connect positioner pneumatically to the actuator. See chapter “Pneumatic connection” on page 34.

e) Switch on power supply to the positioner.

f) Run the X.TUNE function (see chapter “Starting up type 8692, 8792, 8793” on page 29).

2.2tf507614.en

Starting up type 8694

WARNING!

Danger - High pressure

There is a serious risk of injury when reaching into the equipment. Before dismounting pneumatic lines and valves, turn off the pressure and vent the lines.

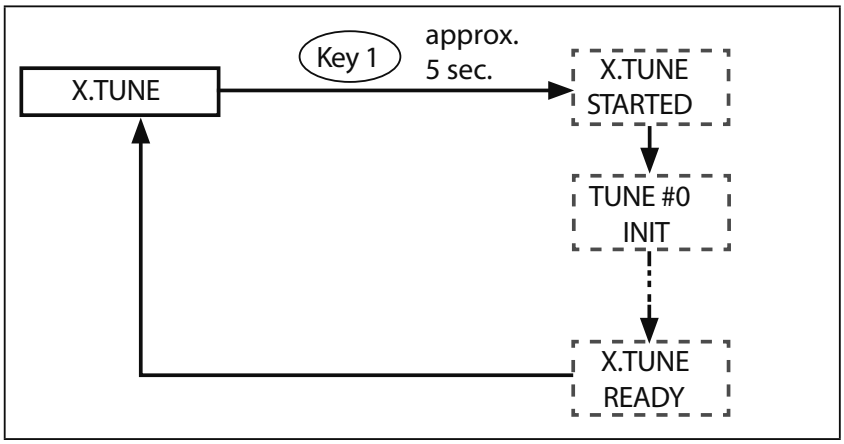

Start X.TUNE by pressing Key 1 for 5 seconds.
While X.TUNE is running LED 1 flashes very quickly (green).
When the automatic adjustment has completed, LED 1 flashes slowly (green). The changes are automatically transferred to the memory (EEPROM) provided the X.TUNE function is successful.

2.2tf507614.en

Basic functions

The following basic functions can be activated via the DIP switches (CUTOFF and CHARACT) or changed (DIR.CMD)

Function	Description	DIP Switches	OFF	ON
DIR.CMD	Effective direction between input signal and set-point position	1	Rise	Fall
CUTOFF	Sealing function for position controller	2	Sealing function off	Sealing function on
CHARACT	Selection of the Transfer Characteristics between Input Signal and Stroke (Correction Characteristics)	3	Linear characteristics	Correction characteristics

(Cont'd)

(Cont'd)

The following basic function can be changed via the communications software only.

Function	Description	Factory setting
INPUT	Entry of the standard signal input for the set-point value	4 - 20 mA

The INPUT, CUTOFF and CHARACT functions can be parameterized via the communications software.

DIR.CMD - Effective Direction of the Position Controller Set-Point Value

This function can be used to adjust the effective direction between the input signal and the nominal position of the actuator.

DIP Switches	Position	Function
1	ON	Reversal of the effective direction of the set-point value (DIR.CMD). Set-point value 20 - 4 mA corresponds to position 0 - 100 %. Fall
	OFF	Normal effective direction of the set-point value. Set-point value 20 - 4 mA corresponds to position 0 - 100 %. Rise

2.2tf507614.en

CUTOFF - Sealing function for the Position Controller

This function causes the valve to be sealed outside the control range.

Control mode resumes as a hysteresis of 1%

DIP Switches	Position	Function
2	ON	Sealing function active. The valve completely closes below 2% and opens above 98% of the set-point value (CUTOFF)
	OFF	No sealing function.

The communications software can be used to change the limits for the position set-point value as a percentage.

(Cont'd)

(Cont'd)

CHARACT - Select the transfer characteristic between input signal (position set-point) and stroke

Characteristic (customer-specific characteristic).

This function can be used to activate a transfer characteristic with respect to set-point value (set-point position) and valve stroke for correction of the flow-rate or operating characteristic.

Factory setting: DIP switch 3 set to OFF (linear).

DIP Switches	Position	Function
3	ON	Correction characteristic for adjustement of the operating characteristic. Linearization of the process characteristic.
	OFF	Linear characteristic

Characteristics which can be selected via the communications software:

Characteristic	Description
Linear	Linear characteristic
1 : 25	Equal percentage characteristic 1 : 25
1 : 33	Equal percentage characteristic 1 : 33
1 : 50	Equal percentage characteristic 1 : 50
25 : 1	Inversely equal percentage 25 : 1
33 : 1	Inversely equal percentage 33 : 1
50 : 1	Inversely equal percentage 50 : 1
FREE	User-definied characteristic, freely programmed via nodes

2.2tf507614.en

Starting up type 8692, 8792, 8793

WARNING!

Risk of injury!
While the X.TUNE function is running, the valve automatically moves from its current position! Take appropriate measures to prevent the equipment from being accidentally actuated!
Never run X.TUNE while a process is running!

Desription of Start-up procedure

When the operating voltage has been switched on, the positioner is at the operating level in the AUTOMATIC operating stage.

To specify the basic settings, switch to the configuration level:
Hold down the left selection key (MENU) for three seconds.
Main menu is indicated on the display.
Press the arrow keys to switch between options in the main menu, select option by pressing ENTER.
Press the arrow keys to switch between options, confirm with ENTER.
To save the changed settings press EXIT.

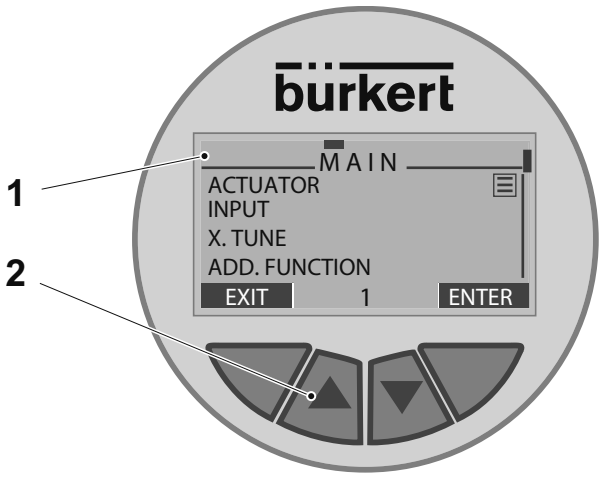

1 Display
2 Selection keys

(Cont'd)

2.2tf507614.en

(Cont'd)

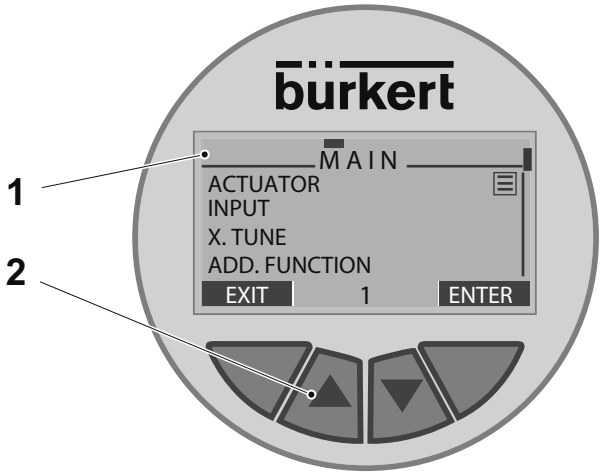

1 Display
2 Selection keys

When starting up the positioner in the main menu, implement the following standard settings:

a) Select INPUT from the main menu display (1) using the selection keys (2).

b) In the INPUT menu option, enter the unit signal used for the set-point value. (4 – 20 mA; 0 – 20 mA; 0 – 10 V or 0 – 5 V).

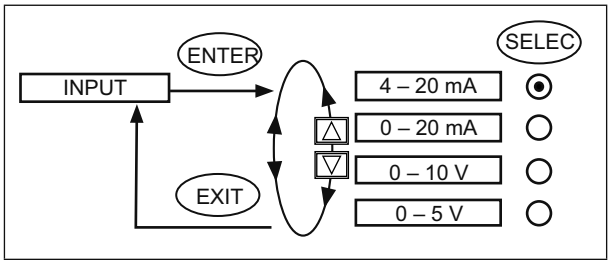

2.2tf507614.en

(Cont'd)

(Cont'd)

c) Using the arrow keys, select X.TUNE in the main menu.

d) Hold down the selection key (RUN) to the right for approx. 3 seconds (countdown).

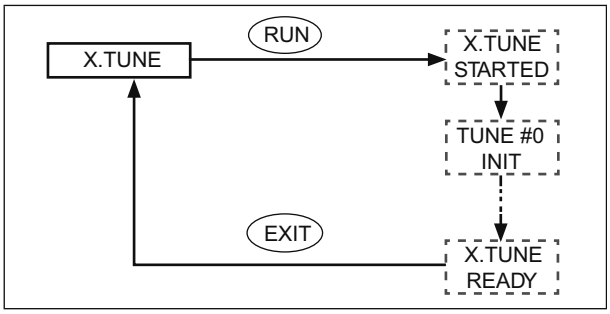

When the automatic adjustment completes, the message “X.TUNE ready” is indicated on the display.

If a fault occurs, “TUNE err/break” is indicated on the display.

e) Press any key to return to the main menu.

f) To leave the main menu, press the selection key (EXIT) to the left.

In doing so, the changes are transferred to the memory (EEPROM).

2.2tf507614.en

Sequence for automatic adjustment of the position controller to the particular operating conditions:

Display	Desription
XTUNE started	Start of XTUNE
TUNE #0 Init	Display of the X.TUNE phase which is currently running. Progress is indicated by a progress bar.
TUNE #1 Max-Pos	
TUNE #2 MIN-Pos	
XTUN Ready	Display at the end of X.TUNE
TUNE err/break	Manual termination of self-parameterization by pressing the EXIT key
X.TUNE ERROR x	An error has occured (check manual)

(Cont'd)

(Cont'd)

Automatic operating state

Bar running from left to right along the upper edge of the display. Normal control mode is implemented and monitored in AUTOMATIC operating stage.

Note! Only applicable to old firmware. In the newer firmware, the active display items can be selected individually. Only POS and CMD are activated as default.

Key	Configuration	Desription
Left selection key	MENU	Switch to the Configuration level.
Right selection key	MENU	Switch between the AUTOMATIC (AUTO) and MANUAL (MANU) operating modes.
Up arrow key	INPUT POS CMD TEMP	Switch between the individual displays.
Down arrow key	CMD TEMP INPUT POS	

Information on the Display

The following variables are indicated on the display for the position controller and it is possible to switch between them with the arrow keys.

2.2tf507614.en

Representation of value	Value range /unit	Desription
POS XXX	0 - 100%	Display of actual position of the valve actuator.
CMD XXX	0 - 100%	Display of nominal position of the valve actuator.
TEMP XXX	-100 - 150 °C	Internal temperature in the housing of the positioner.
INPUT XXX	0/4 - 20 mA, 0 - 5/10 V	Input signal for nominal position.

(Cont'd)

(Cont'd)

Manual operating stage

Without bar running from left to right along the upper edge of the display.
In MANUAL operating stage the valve can be opened or closed manually.

Key	Configuration	Desription
Left selection key	MENU	Switch to the Configuration level.
Right selection key	MANU	Switch between the AUTOMATIC (AUTO) and MANUAL (MANU) operating modes.
Up arrow key	OPN CLS	Aerate the actuator. Control function A (SFA) valve opens. Control function B (SFB) valve closes. Control function I (SFI) connection 2.2.
Down arrow key	CLS OPN	Deaerate the actuator. Control function A (SFA) valve opens. Control function B (SFB) valve closes. Control function I (SFI) connection 2.2.

- SFA = normally closed
- SFB = normally open
- SFI = Actuator double-acting

2.2tf507614.en

Pneumatic connection

Caution! The not used connection of the positioner must always be plugged. In case of power fails, A1 will deaerate the chamber, A2 will aerate it. Connecting to A1 to the actuator chamber will drive the process valve into its pneumatic safety position.

Valve type 2300, 2301

Positioner 8792

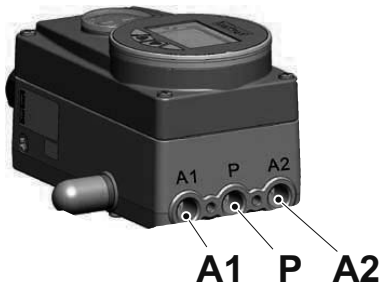

A1 Working connection 1
P Supply pressure connection
A2 Working connection 2

Remote sensor 8798

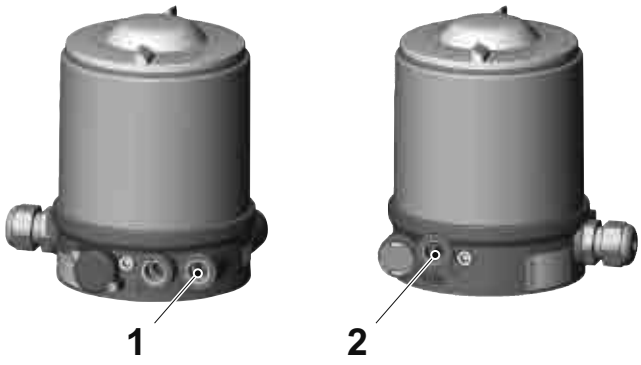

1 Connection 1
2 Connection 3_1

2.2tf507614.en

Control functions A and B (single-acting actuator):

a) Connect the working connection (A1) or (A2) of the positioner to connection 1 (1) on the remote sensor, using a hose.

b) Attach the exhaust airline or a silencer to connection 3_1 (2).

Note! In case of power fails, A1 will deaerate the chamber, A2 will aerate it! Connecting to A1 to the actuator chamber will drive the process valve into its pneumatic safety position.

Control function I (double-acting actuators):

a) Connect working connections (A1) and (A2) to the respective chambers of the remote sensor:
Connection 1 (1) to lower chamber.
Connection 3_1 (2) to upper chamber.

(Cont'd)

(Cont'd)

Valve type 2712

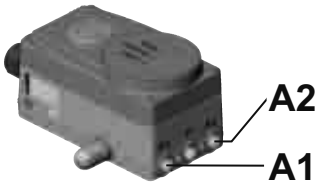

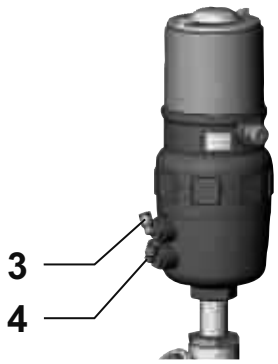

A1 Connection 1
A2 Connection 2

3 Upper chamber
4 Lower chamber

Control function A (single-acting actuator):

a) Connect the working connection (A1) or (A2) of the positioner to the lower chamber (4) of the actuator, using a hose.

b) Attach the exhaust airline or a silencer to the upper chamber (3).

Control function B (single-acting actuator):

a) Connect the working connection (A1) or (A2) of the positioner to the upper chamber (3) of the actuator, using a hose.

b) Attach the exhaust airline or a silencer to the lower chamber (4).

Control function I (double-acting actuators):

c) Connect working connections (A1) and (A2) to the respective chambers of the actuator.

2.2tf507614.en

Cleaning

Commercially available cleaning agents can be used to clean the outside.

Note! Before cleaning, check that the cleaning agents are compatible with the housing materials and seals.

Troubleshooting

Malfunction	Remedial action
Actuator does not switch.	Control connection interchanged. SFA: Connecting control connection 1. SFB: Connecting control connection 1. SFI Control connection 1: Open. Control connection 2: Close.
	Control pressure too low. See pressure specifications on the rating plate.
	Medium pressure too high. See pressure specifications on the rating plate.
	Flow direction reversed. See direction arrow on the housing.
Valve is not sealed.	Dirt between seal and valve seat. Install dirt trap.
	Seat seal worn. Install a new control cone.
	Flow direction reversed. See direction arrow on the housing.
	Pressure of medium too high. See pressure specifications on the rating plate.
	Control pressure too low. See pressure specifications on the rating plate.
Valve is leaking on the release bore.	Stuffing box worn. Replace actuator.

2.2tf507614.en

Spare Parts

Valve Type 2300

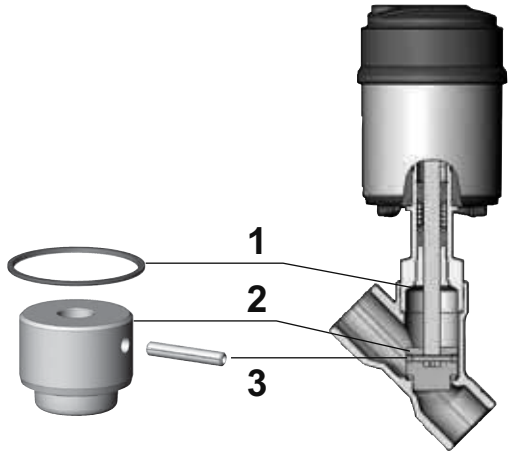

Spare Part Article No.	Description	Included Parts	Pos.	Qty
90503-5764	Control cone set (SS/SS) DN13, DN15	Graphite seal Control cone Dowel pin	1 2 3	1 1 1
90503-5758	Control cone set (PTFE) DN13, DN15			
90503-5759	Control cone set (PTFE) DN20			
90503-5765	Control cone set (SS/SS) DN20			
90503-5760	Control cone set (PTFE) DN25			
90503-5766	Control cone set (SS/SS) DN25			
90503-5761	Control cone set (PTFE) DN32, E70			
90518-9408	Control cone set (PTFE) DN32, E90, E130			
90503-5767	Control cone set (SS/SS) DN32, E70			
90518-9409	Control cone set (SS/SS) DN32, E			
90520-9788	Control cone set (PTFE) DN40			
90520-9792	Control cone set (SS/SS) DN40			
90520-9789	Control cone set (PTFE) DN50			
90520-9793	Control cone set (SS/SS) DN50			
90520-9790	Control cone set (PTFE) DN65			
90520-9794	Control cone set (SS/SS) DN65			

2.2tf5507615.en

Valve Type 2301

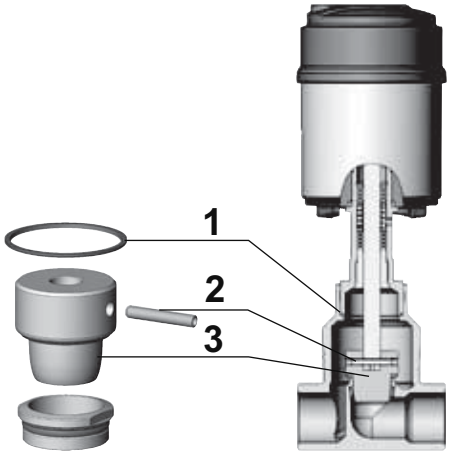

Spare Part Article No.	Description	Included Parts	Pos.	Qty
90520-7305	Valve set (SS/SS) Fit DN4 Housing DN10,DN15	Graphite seal Control cone Dowel pin	1 3 2	1 1 1
90522-1722	Valve set (SS/SS) Fit DN6 Housing DN10,DN15			
90520-7306	Valve set (SS/SS) Fit DN8 Housing DN10,DN15			
90521-5829	Valve set(SS/SS) Fit DN15 Housing DN20			
90520-4172	Valve set (SS/SS) Fit DN20 Housing DN20			
90520-4177	Valve set (SS/SS) Fit DN20 Housing DN25			
90503-0880	Valve set (SS/SS) Fit DN25 Housing DN25			

(Cont'd)

2.2tf5076l5.en

(Cont'd)

Spare Part Article No.	Description	Included Parts	Pos.	Qty
90520-4167	Valve set (SS/SS) Fit DN32 Housing DN32	Graphite seal Control cone Dowel pin	1 3 2	1 1 1
90519-5034	Valve set (SS/SS) Fit DN32 Housing DN32			
90520-7307	Valve set (SS/SS) Fit DN32 Housing DN40			
90520-4174	Valve set (SS/SS) Fit DN40 Housing DN40			
90520-4175	Valve set (SS/SS) Fit DN65 Housing DN65			

2.2tf507615.en

Valve Type 2712

Actuator size 175& 225 mm

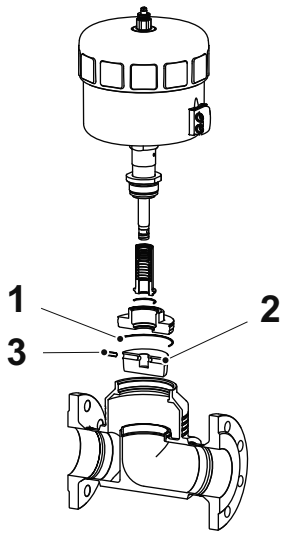

Spare Part Article No.	Description	Included Parts	Pos.	Qty
90520-7305	Trim kit, (SS/SS) Valve body DN10, DN15 Control plug DN4	Dowel pin Plug Graphite seal	3 2 1	1 1 1
90520-4171	Trim kit, (SS/SS) Valve body DN10 Control plug DN10			
90520-4169	Trim kit, (SS/PTFE) Valve body DN15 Control plug DN15			
90503-0871	Trim kit, (SS/SS) Valve body DN20 Control plug DN15			
90520-4170	Trim kit, (SS/PTFE) Valve body DN20 Control plug DN20			
90520-4172	Trim kit, (SS/SS) Valve body DN20 Control plug DN20			

(Cont'd)

2.2tf5076l5.en

(Cont'd)

Spare Part Article No.	Description	Included Parts	Pos.	Qty
90520-0880	Trim kit, (SS/SS) Valve body DN25 Control plug DN25	Dowel pin Plug Graphite seal	3 2 1	1 1 1
90520-4167	Trim kit, (SS/SS) Valve body DN32 Control plug DN32			
90519-8622	Trim kit, (SS/PTFE) Valve body DN32, Control plug DN32			
90520-4174	Trim kit, (SS/SS) Valve body DN40 Control plug DN40			
90503-0876	Trim kit, (SS/SS) Valve body DN50 Control plug DN50			
90520-4176	Trim kit, (SS/PTFE) Valve body DN50 Control plug DN50			
90520-4175	Trim kit, (SS/SS) Valve body DN65 Control plug DN65			
90513-0875	Plug set (SS/SS) Housing DN80 Seat DN80	Plug Dowel pin Graphite seal	2 3 1	1 1 1
90513-0874	Plug set (SS/SS) Housing DN100 Seat DN100			

2.2tf507615.en

Valve Type 2103

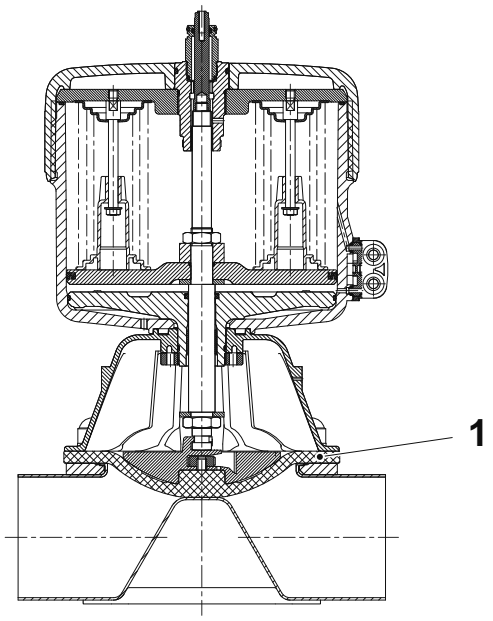

Spare Part Article No.	Description	Pos.	Qty
90512-1198	Diaphragm, EPDM, Valve size DN50	1	1
90513-7359	Diaphragm, EPDM, Valve size DN80		
90518-9007	Diaphragm, PTFE/EPDM, Valve size DN10		
90517-9650	Diaphragm, PTFE/EPDM, Valve size DN15		
90510-4254	Diaphragm, PTFE/EPDM, Valve size DN20		
90517-3370	Diaphragm, PTFE/EPDM, Valve size DN25		
90517-3676	Diaphragm, PTFE/EPDM, Valve size DN40		
90521-6817	Diaphragm, PTFE/EPDM, Valve size DN50		

2.2tf507615.en

Packing Gland

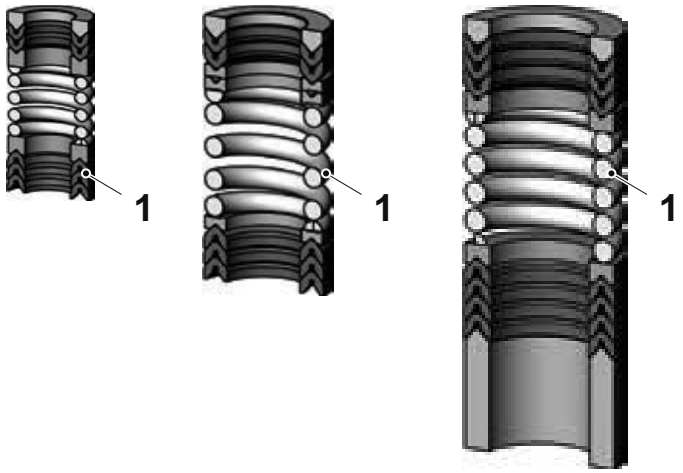

Spare Part Article No.	Description	Pos.	Qty
Valve Type 2300			
90518-8548	DN15-DN32, 50E/70E	1	1
90517-3524	DN25-DN50, 90E/130E	1	1
90519-9452	DN25-DN50, 130E	1	1
Valve Type 2301			
90518-8548	DN10-DN25, 50E/70E	1	1
90517-3524	DN25-DN50, 90E/130E	1	1
90519-9452	DN65-DN100, 130E	1	1

2.2tf507615.en

Actuator, Valve Type YG/GB/GD/DD/DF



Spare Part Article No.	Description	Pos.	Qty
90513-4534	Actuator complete 50 mm, angle-seat valve, orifice DN 15 mm.	1	1
90513-4535	Actuator complete 70 mm, angle-seat and globe valve, orifice DN 15 mm04, 06	1	1
90513-4536	Actuator complete 70 mm, angle-seat, orifice DN 20 mm	1	1
90513-4537	Actuator complete 70 mm, angle-seat and globe valve, orifice DN 20 mm	1	1
90515-9038	Actuator complete 70 mm, globe valve, orifice DN 20 mm	1	1
90513-4538	Actuator complete 70 mm, angle-seat and globe valve, orifice DN 25 mm	1	1
90523-0979	Actuator complete 90 mm, globe valve, orifice DN 32 mm	1	1
90513-4539	Actuator complete 90 mm, angle-seat and globe valve, orifice DN 32 mm	1	1
90513-4540	Actuator complete 90 mm, angle-seat and globe valve, orifice DN 40 mm	1	1
90513-4541	Actuator complete 90 mm, angle-seat, orifice DN 50 mm	1	1
90513-4542	Actuator complete 90 mm, globe valve, orifice DN 50 mm	1	1
90513-4543	Actuator complete 130 mm, globe valve, orifice DN 65 mm	1	1

2.2tf507615.en

Actuator, Valve Type PD



Spare Part Article No.	Description	Pos.	Qty
90523-4283	Actuator, Quarter turn 100C type 2050	1	1

2.2tf507615.en

Side control 8792 without PID



Spare Part Article No.	Description	Pos.	Qty
90513-4519	Side Control 8792. Remote positioner, actuators 130E and 225C	1	1
90513-4521	Side Control 8792. Remote positioner, actuators 70E and 90E	1	1

2.2tf507615.en

Position Sensor 8798

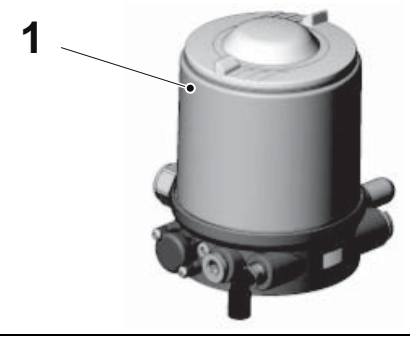

Spare Part Article No.	Description	Pos.	Qty
90513-4520	Position Sensor 8798, actuators 70E to 130E	1	1
90513-4522	Position Sensor 8798, actuator 225C	1	1

2.2tf507615.en

Side Control 8793 with PID



Spare Part Article No.	Description	Pos.	Qty
90513-4527	Side Control 8793. Remote process controller, actuators 70E and 90E	1	1
90513-4528	Side Control 8793. Remote process controller, actuators 130E and 225C	1	1

2.2tf507615.en

Position Sensor 8694



Spare Part Article No.	Description	Pos.	Qty
90523-0980	Basic Positioner 8694, actuators 70/90, cable gland	1	1
90519-9443	Basic Positioner 8694, 70E/90E, M12	1	1
90523-4284	Basic Positioner to 2050 1/4 turn, actuator 100C and to actuator 125/175/225C, cable gland.	1	1

2.2tf507615.en

Replacement Kit 8694, 8692, 8693

Spare Part Article No.	Description	Included Parts	Pos.	Qty
90513-4985	Replacement kit 8694 Actuators 70E and 90E	M12-8	-	1
90513-4986	Replacement kit 8694 Actuator 130E	M12-8	-	1
90513-4987	Replacement kit 8694 Actuator 225C	M12-8	-	1
90513-4988	Replacement kit 8692 Actuators 70E and 90E	M12-8	-	1
90513-4989	Replacement kit 8692 Actuator 130E	M12-8	-	1
90513-4990	Replacement kit 8692 Actuator 225C	M12-8	-	1
90513-4991	Replacement kit 8692 Profibus DPV1 Actuators 70E and 90E	2xM12-5, M12-4	-	1
90513-4992	Replacement kit 8692 Profibus DPV1 Actuator 130E	2xM12-5, M12-4	-	1
90513-4993	Replacement kit 8692 Profibus DPV1 Actuator 225C	2xM12-5, M12-4	-	1
90513-4994	Replacement kit 8693 Actuators 70E and 90E	Cable gland	-	1
90513-4995	Replacement kit 8693 Actuator 130E	Cable gland	-	1
90513-4996	Replacement kit 8693 Actuator 225C	Cable gland	-	1
90513-4997	Replacement kit 8693 Profibus DPV1 Actuators 70E and 90E	M12-8, M12-4, M8-4	-	1
90513-4998	Replacement kit 8693 Profibus DPV1 Actuator 130E	M12-8, M12-4, M8-4	-	1
90513-4999	Replacement kit 8693 Profibus DPV1 Actuator 225C	M12-8, M12-4, M8-4	-	1

2.2tf5076l5.en

Assembly Tools

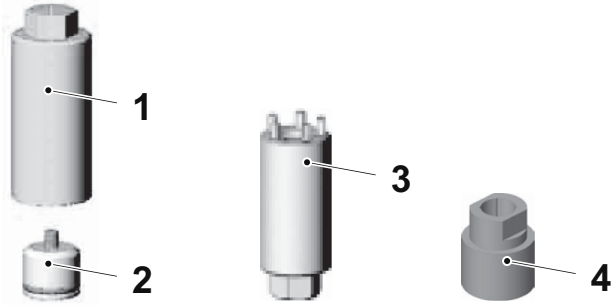

Spare Part Article No.	Size	Included Parts	Pos.	Qty.
Assembly tool				
90513-0882	DN15	Assembly tool Tool insert	1 2	1 1
90513-0883	DN20			
90513-0884	DN25			
90513-0885	DN32			
90513-0886	DN40			
90513-0887	DN50			
Installation wrench for packing gland				
90516-4984	10 mm		3	1
90516-4985	14 mm			
Modified socket wrench for packing gland				
90519-7466	DN15 E50		4	1
90519-7467	DN20-32 E70			
90519-7468	DN25-50 E90			

2.2tf507615.en

Tetra Pak

Maintenance & Spare Parts

Regulating Valve

1890/1890A

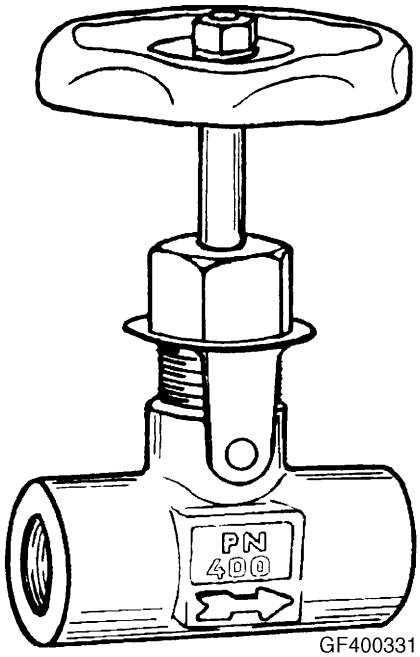

1.0 1241004-0101.fro

Tetra Pak

Doc No. 1241004-0101

Regulating Valve

1890/1890A

Article No.	Type	Connection	Kv
31801-2550-1	1890	DN8	0.34
31801-2550-2	1890	DN10	0.46
31801-2550-3	1890	DN15	0.60
31801-2550-4	1890	DN20	1.60
31801-2550-5	1890	DN25	2.10
90522-3364	1890A	DN8	0.42
90522-3365	1890A	DN10	0.48
90522-3366	1890A	DN15	0.54
90522-3367	1890A	DN20	1.2
90522-3368	1890A	DN25	1.45

1.0 1241004-0101.fro

Version 02 Issue 2016-07

Doc No. 1241004-0101

Tetra Pak

Tetra Pak Processing Systems AB

Table of contents

Maintenance 1

Regulating valve 1

Description 1

Check. 1

Change. 2

Spare parts 3

1.0 1241004-0101.toc

This page intentionally left blank

Maintenance

Regulating valve

Description

The regulating valve is made of acid proof stainless steel. It is a manual regulating valve with threaded pipe connections. The valve gland packing is made of graphite.

Check

WARNING!

Risk of injury!
Make sure before dismantling, that the pipeline is drained and free from media.

Check if there is any leakage at the stem. If necessary, the following action has to be taken:

a) Tighten the bonnet nut (1).

b) If the leakage still persists, the seals have to be changed.

2.2tf400114.en

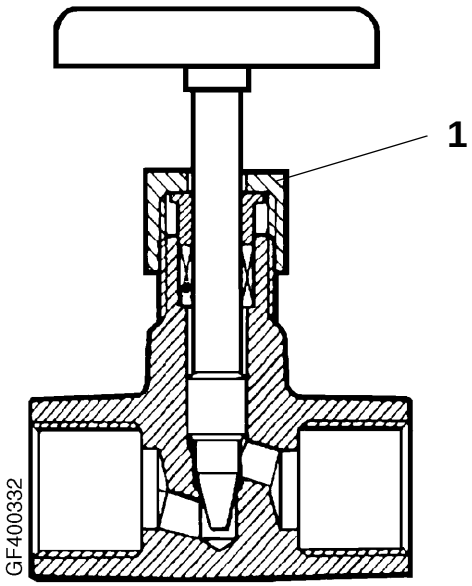

1 Bonnet nut

Change

WARNING!

Risk of injury!
Make sure before dismantling, that the pipeline is drained and free from media.

a) Open the lock clamp and remove the stem (2). Unscrew the bonnet nut (3).
b) Slide out the complete stem from the body (1).
c) Remove the gland (4) to expose the gland packing (5).
d) Remove the gland packing (5) and change it.
e) All re-usable components should be thoroughly cleaned.
f) Fit a gland packing (5) in the valve body.
g) Operate the stem and adjust the gland nut to easy operation of the valve.

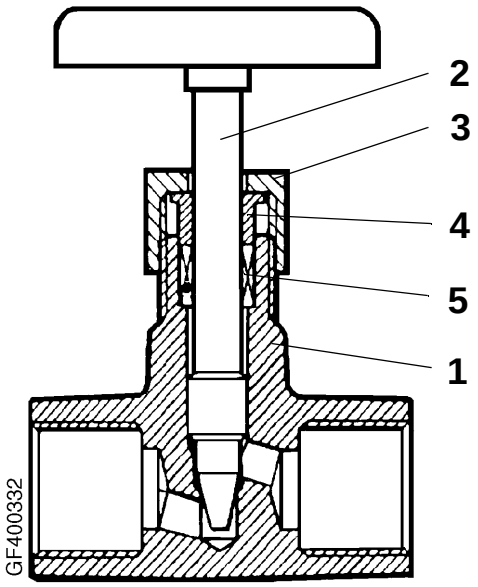

1 Body
2 Stem
3 Bonnet nut
4 Gland
5 Gland packing

2.2tf400114.en

Spare parts

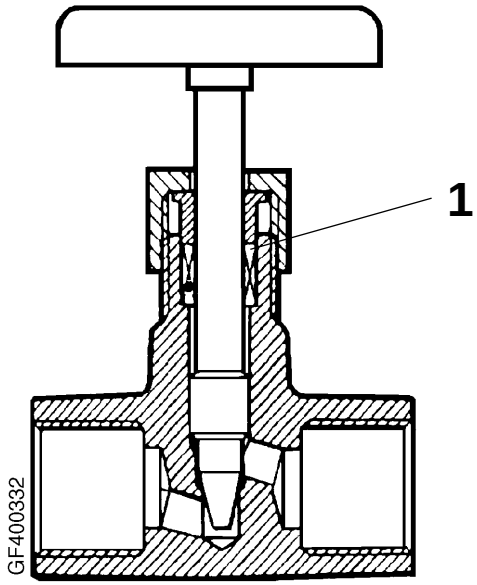

Group description	Pos.	Qty	Spare parts Article No.	Description
Spare parts kit DN8	1	1	6-990411-90	Gland packing, valve 1890
Spare parts kit DN10	1	1	6-990411-91	Gland packing, valve 1890
Spare parts kit DN15	1	1	6-990411-92	Gland packing, valve 1890
Spare parts kit DN20/25	1	1	6-990411-93	Gland packing, valve 1890
Spare parts kit DN8/10/15	1	1	90523-1579	Gland packing, valve 1890A
Spare parts kit DN20	1	1	90523-1580	Gland packing, valve 1890A
Spare parts kit DN25	1	1	90523-1581	Gland packing, valve 1890A

2.2tf400115.en

Tetra Pak

Maintenance & Spare Parts

Constant-pressure modulating valve

(Alfa Laval)
CPM-I-D60

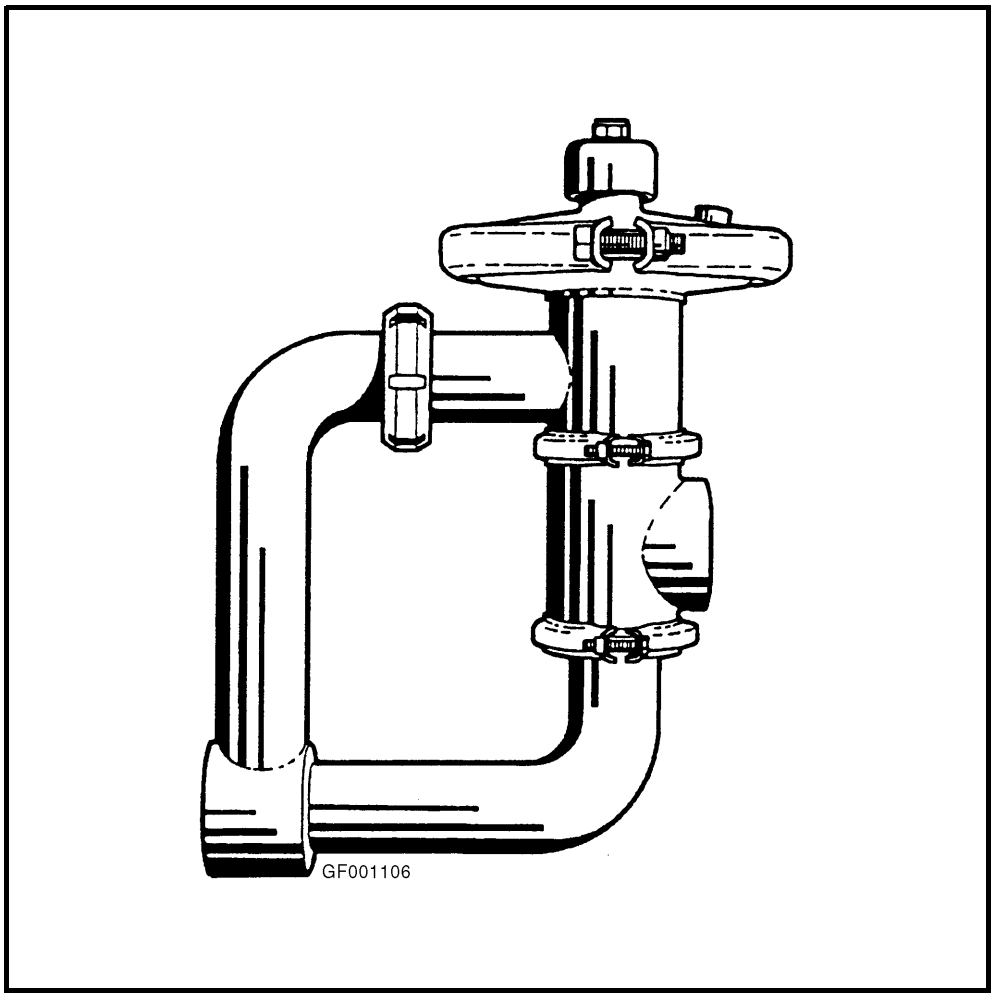

1.0 1241266-0101.fro

Tetra Pak

Doc No. 1241266-0101

Constant-pressure modulating valve

CPM-I-D60

Article No.	Type	Kv (m^3/h)	Connection
6-31356-6141-1	CPM-I-D60	60	W 76.1
6-9612-65-0299	CPM-I-D60	60	W 76.1
6-9612-65-0307	CPM-I-D60	60	W 76.1
6-9612-65-0309	CPM-I-D60	60	W 76.1
6-9612-65-0321	CPM-I-D60	60	W 76.1

1.0 1241266-0101.fro

Version 03 Issue 2015-06

Doc No. 1241266-0101

Tetra Pak

Tetra Pak Processing Systems AB

Table of contents

Description 1

General 1

Maintenance 2

Constant-pressure modulating valve 2

Change spare part kit 2

Disassemble 2

Reassemble 4

Spare parts 6

1.0 1241266-0101.TOC

This page intentionally left blank

Description

General

CPM-I-D60 is a sanitary constant-pressure valve for use in stainless steel pipe systems. The CPM-I-D60 (Constant-Pressure Modulating Inlet) maintains a constant pressure in the process line at the inlet side of the valve. It is often used after separators and heat exchangers or as an overflow valve.

A diaphragm/valve plug system reacts immediately to any alteration of the product pressure and changes position to maintain preset pressure. The CPM-I-D60 opens at increasing product pressure and vice versa.

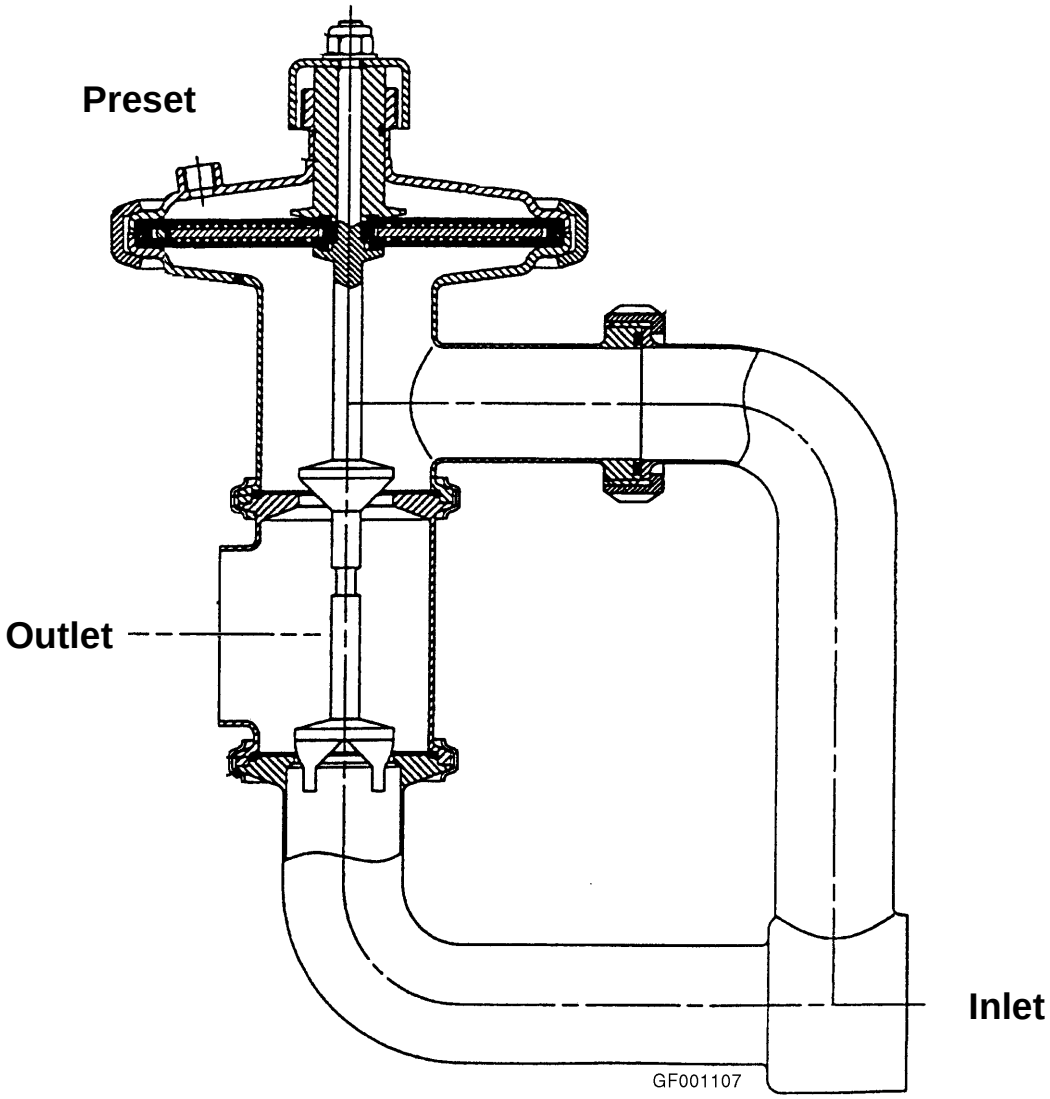

2.2tf000779.en

Maintenance

Constant-pressure modulating valve

Change spare part kit

WARNING!

Risk of injury!
Make sure that the pipelines are drained and free from media before servicing the valve!
Never service the valve when it is hot!
Always disconnect compressed air before service!
The valve and the pipelines must **never** be pressurised when servicing the valve!

Disassemble

a) Loosen and remove clamps (9, 17).
b) Loosen the connection between the valve body (7) and the inlet tube (20).
c) Remove the inlet tube (20) and the lower valve body (8).
d) Remove the seal rings (10, 18).
e) Remove the clamp (11).
f) Remove the cover (12) with the internal parts of the valve.
g) Remove the top nut (1), washer (2), and top (3).

2.2tf000780.en

Note! In “h” ensure that the cover (12) is turned downwards and the plug (19) is pulled upwards so that the sectors (16) are not separated from the diaphragms (6, 15).

h) Remove the plug (19) from the diaphragm unit and the guide (14).
i) Remove the lower inner ring (4) and the lower diaphragm (6).
j) Remove the sectors (16).
k) Remove the outer ring (5), the upper inner ring (4), and the upper diaphragm (15).
l) Remove the guide (14) from the cover (12).
m) Remove the O-ring (13) from the guide (14).

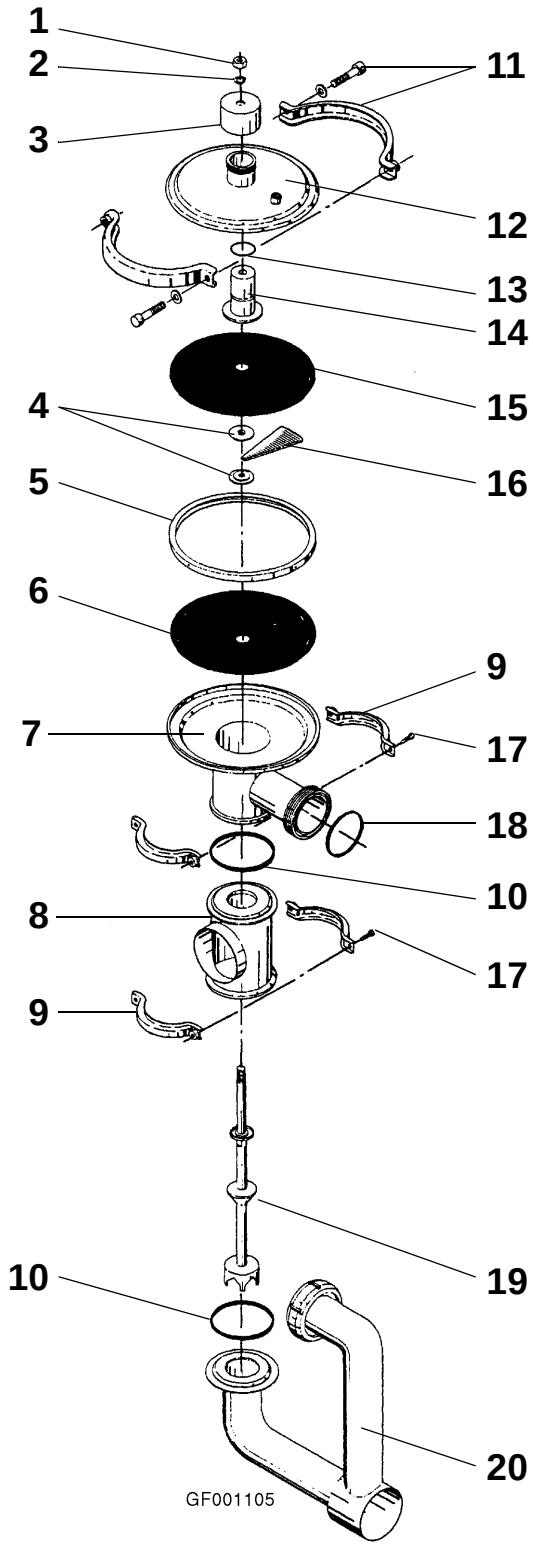

1 Top nut
2 Washer
3 Top
4 Inner ring
5 Outer ring
6 Lower diaphragm
7 Valve body
8 Valve body, lower
9 Clamp
10 Valve body seal ring
11 Clamp set
12 Cover
13 O-ring
14 Guide
15 Upper diaphragm
16 Sector
17 Screw
18 Seal ring
19 Plug
20 Inlet tube

2.2tf000780.en

Reassemble

Change the parts of the spare part kit; the O-ring (13), the seal rings (10, 18), and the diaphragms (6, 15).

Lubricate the guide, the sectors, and the threads with food grade grease before reassembly.

a) Fit the O-ring (13) on the guide (14).

b) Fit the lubricated guide (14) into the cover (12).

Note! Turn the cover (12) downwards before continuing, and make sure that the diaphragms are fitted correctly. The flat side of the upper diaphragm should be fitted towards the cover.

c) Fit the upper diaphragm (15), the upper inner ring (4), and the outer ring (5) on the guide (14) and the cover (12). Make sure that the indication hole of the outer ring is fixed with the indication hole in the cover.

d) Fit the sectors (16) between the upper inner ring (4) and the outer ring (5).

e) Fit the lower inner ring (4) and the lower diaphragm (6).

f) Fit the plug (19) in the diaphragm unit and the guide (14) until the flange of the plug contacts the lower diaphragm (6).

g) Fit the top (3), the washer (2), and the top nut (1).

h) Fit the cover (12) together with the valve body (7).

i) Fit and tighten the clamp (11) to a torque of 10-15 Nm.

j) Fit the seal rings (10, 18).

k) Fit the lower valve body (8) and the inlet tube (20).

l) Tighten the connection between the valve body (7) and the inlet tube (20).

m) Fit and tighten the clamps (9, 17).

Note! **Pre-use check:** Lift and lower the valve top several times to ensure that the valve operates smoothly.

2.2tf000780.en

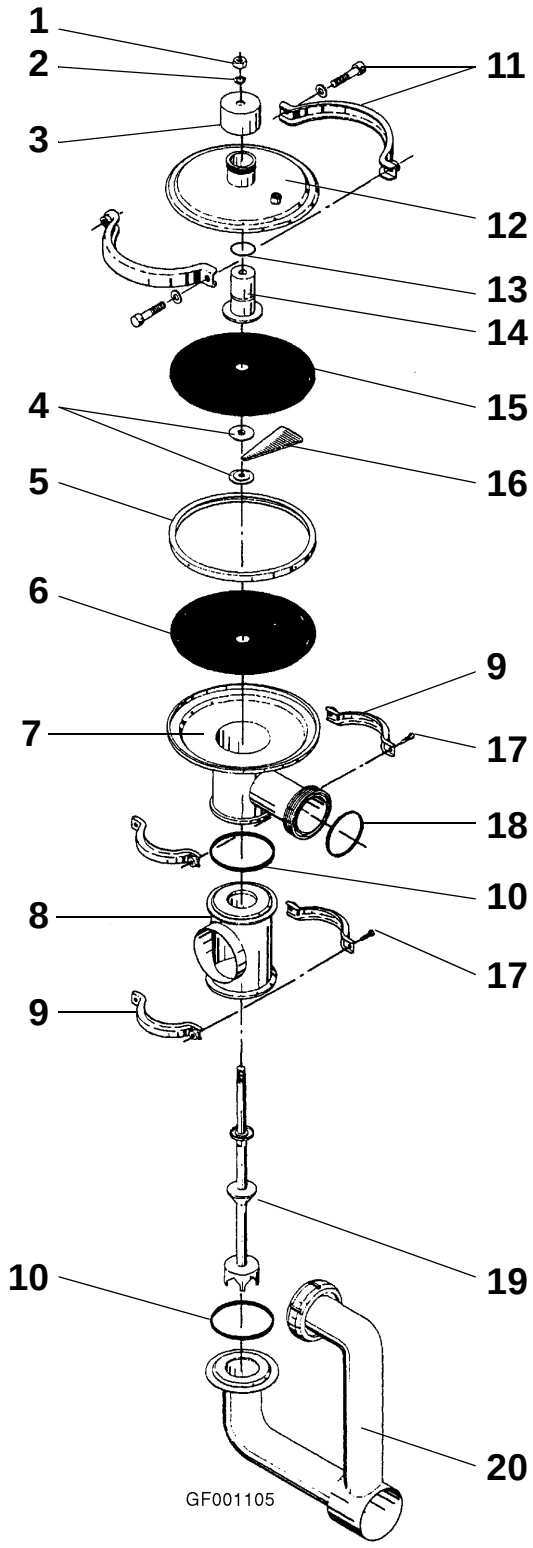

1 Top nut
2 Washer
3 Top
4 Inner ring
5 Outer ring
6 Lower diaphragm
7 Valve body
8 Valve body, lower
9 Clamp
10 Valve body seal ring
11 Clamp set
12 Cover
13 O-ring
14 Guide
15 Upper diaphragm
16 Sector
17 Screw
18 Seal ring
19 Plug
20 Inlet tube

2.2tf000780.en

Spare parts

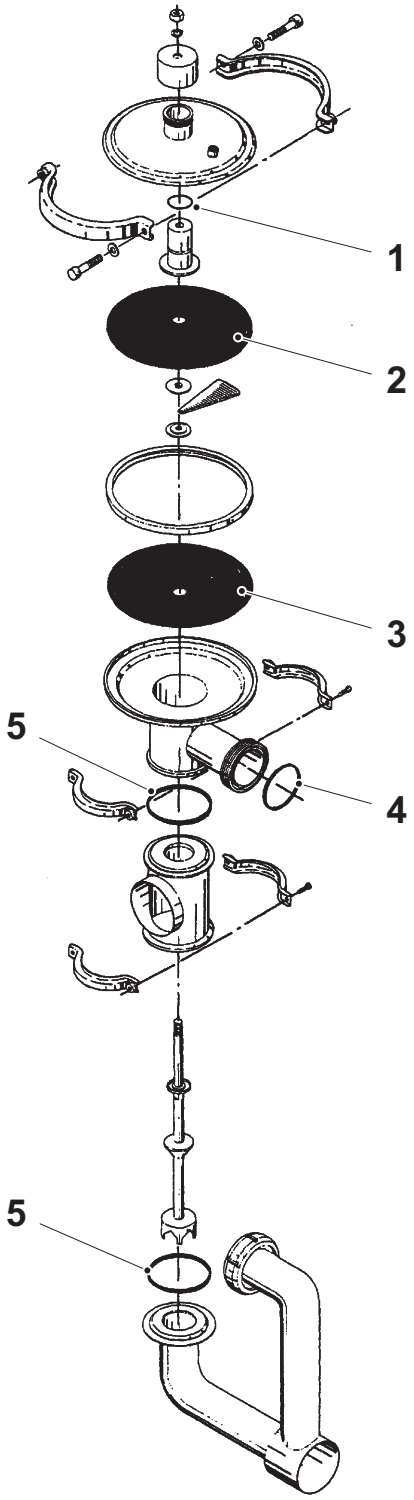

2.2tf000781.en

Component article No.	Spare part article No.	Description	Included parts	Pos.	Qty.
6-31356-6141-1 6-9612-65-0299 6-9612-65-0307 6-9612-65-0309 6-9612-65-0321	6-9611-92-0119	Spare part kit	O-ring Upper diaphragm Lower diaphragm	1 2 3	1 1 1
6-9612-65-0307	6-190604-00	Seal ring	Seal ring	4	1
6-9612-65-0299 6-9612-65-0309 6-9612-65-0321	6-31353-0128-2	Seal ring	Valve body seal ring	5	2

2.2tf000781.en

Tetra Pak

Maintenance & Spare Parts

Non-return valve

(Alfa Laval)

LKC-2



1.0 1241273-0101.fro

Tetra Pak

Doc No. 1241273-0101

Non-return valve

LKC-2

This document refers to components specified in Technical Manual, Maintenance & Spare Parts CD/DVD or on Tetra Pak Intranet.

1.0 1241273-0101.fro

Version 05 Issue 2016-07

Doc No. 1241273-0101

Tetra Pak

Tetra Pak Processing Systems AB

Table of contents

Maintenance 1

Non-return valve 1

Change seals 1

Spare parts 2

Non-return valve 2

1.0 1241273-0101.TOC

This page intentionally left blank

Maintenance

Non-return valve

Change seals

WARNING!

Risk of injury!
Make sure before dismantling that the pipeline is drained and free from media.

a) Disassemble the clamp ring (5) and pull apart the two coupling halves (1) and (2) to expose the valve cone (3) and guide plate (4).

b) Visually inspect the condition of the seat seal (7) and seal ring (6).

c) Change if required.

d) When assembling, ensure that the valve cone (3) is lined up with the valve body (1).

1 Valve body
2 Valve body
3 Valve cone
4 Guide plate
5 Clamp ring
6 Seal ring
7 Seat seal
8 Spring

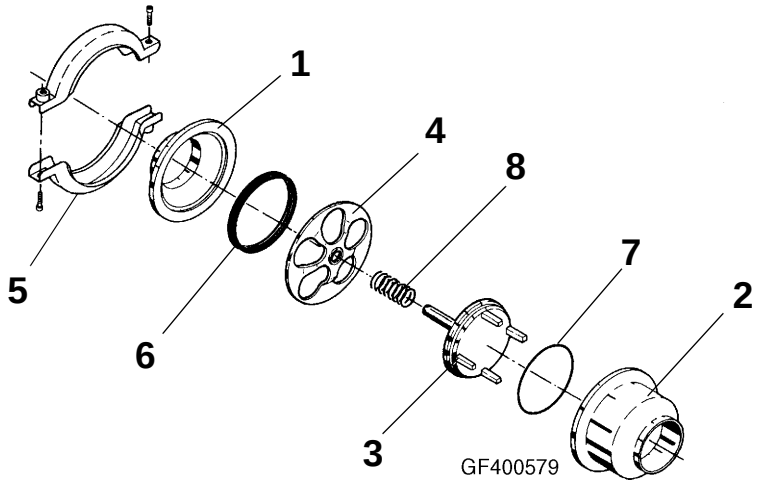

2.2tf400419.en

Spare parts

Non-return valve

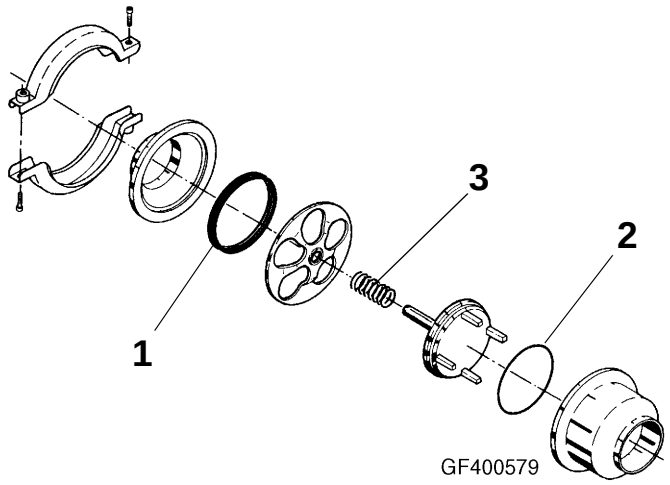

Spare part article No.	Description	Included parts	Pos.	Qty.
6-9611-92-4005	Spare parts kit, EPDM, 25mm/DN25	Seal ring O-ring	1 2	1
6-9611-92-4011	Spare parts kit, NBR, 25mm/DN25			
6-9611-92-4017	Spare parts kit, FPM, 25mm/DN25			
6-9611-99-1677	Spring, 25mm/DN25	Spring	3	1
6-9611-92-4006	Spare parts kit, EPDM, 38mm/DN40	Seal ring O-ring	1 2	1
6-9611-92-4012	Spare parts kit, NBR, 38mm/DN40			
6-9611-92-4018	Spare parts kit, FPM, 38mm/DN40			
6-9611-99-1678	Spring, 38mm/DN40	Spring	3	1
6-9611-92-4007	Spare parts kit, EPDM, 51mm/DN50	Seal ring O-ring	1 2	1
6-9611-92-4013	Spare parts kit, NBR, 51mm/DN50			
6-9611-92-4019	Spare parts kit, FPM, 51mm/DN50			
6-9611-99-1679	Spring, 51mm/DN50	Spring	3	1
6-9611-92-4008	Spare parts kit, EPDM, 63,5mm/DN65	Seal ring O-ring	1 2	1
6-9611-92-4014	Spare parts kit, NBR, 63,5mm/DN65			
6-9611-92-4020	Spare parts kit, FPM, 63,5mm/DN65			
6-9611-99-1680	Spring, 63,5mm/DN65	Spring	3	1
6-9611-92-4009	Spare parts kit, EPDM, 76mm/DN80	Seal ring O-ring	1 2	1
6-9611-92-4015	Spare parts kit, NBR, 76mm/DN80			
6-9611-92-4021	Spare parts kit, FPM, 76mm/DN80			
6-9611-99-1681	Spring, 76mm/DN80	Spring	3	1

2.2tf400420.en

6-9611-92-4010	Spare parts kit, EPDM, 101,6mm/DN100	Seal ring O-ring	1 2	1
6-9611-92-4016	Spare parts kit, NBR, 101,6mm/DN100			
6-9611-92-4022	Spare parts kit, FPM, 101,6mm/DN100			
6-9611-99-2031	Spring, 101,6mm/DN100	Spring	3	1

2.2tf400420.en

Tetra Pak

Maintenance & Spare Parts

Top Control Head

(Bürkert)
8695/8697



1.0 3280255-0101.fro

Tetra Pak

Doc No. 3280255-0101

Top Control Head

8695/8697

This document refers to components specified in Technical Manual, on Maintenance & Spare Parts CD/DVD or on Tetra Pak Intranet.

1.0 3280255-0101.fro

Version 02 Issue 2016-11

Doc No. 3280255-0101

Tetra Pak

Tetra Pak Processing Systems AB

Table of contents

Function Description 1

Top Control Head 8695 1

Top Control Head 8697 2

Maintenance 3

Actuator 21xx + Top 8695 3

Change Top Control Head 3

Calibrate Control Head 8695 6

Actuator 20xx / 21xx + Top 8697 8

Change Top Control Head 8

Calibrate Control Head 8697 11

Spare Parts 12

Not applicable for this component! 12

1.0 3280255-0101.TOC

This page intentionally left blank

Function Description

The control head can control single or double-acting process valves.

Top Control Head 8695

The control head is optimized for use with valves in **21xx** series.

The valve position is recorded via a contact-less, analog sensor element which automatically detects and saves the valve end positions by means of the teach function during start-up.

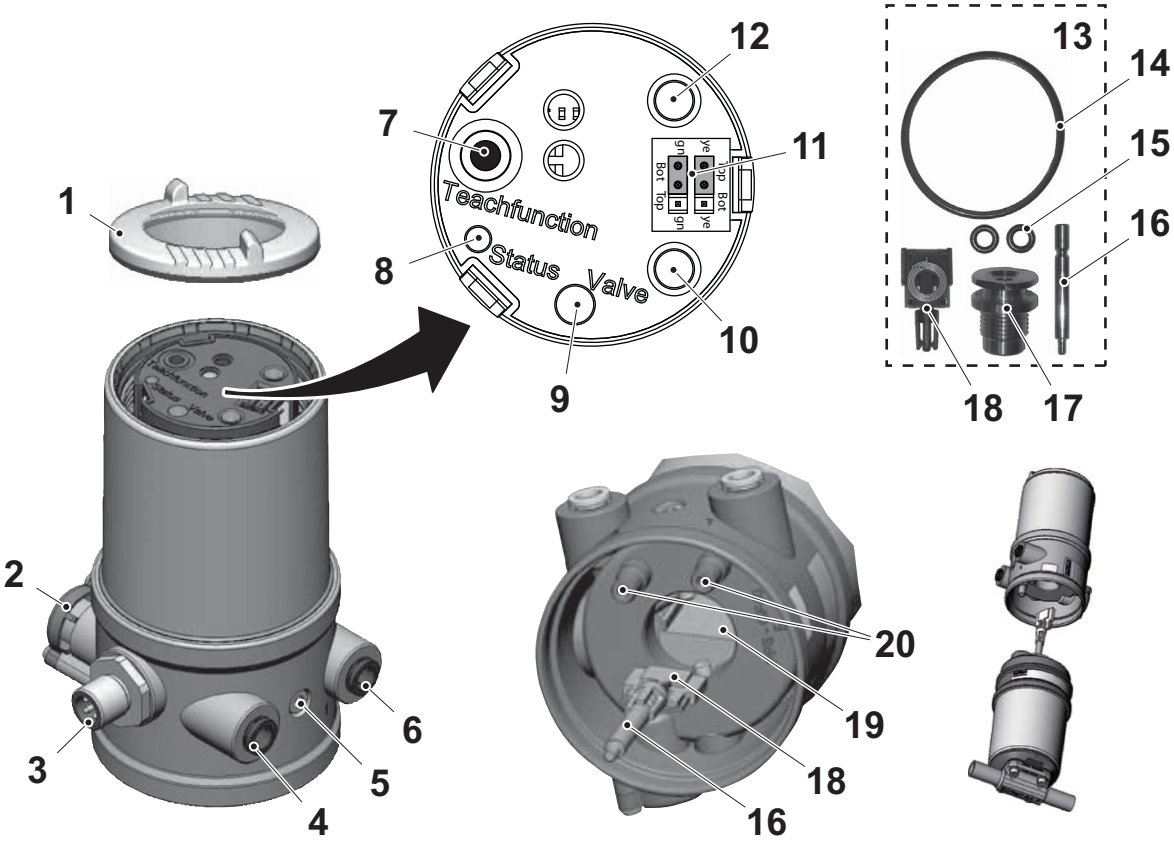

2.2tf508413.en

1 Cap
2 Pressure limiting valve
3 Electrical connection
4 Air exhaust port
5 Fastening screws
6 Pilot air port
7 Teach function
8 Status LED yellow
9 Valve LED yellow (pilot valve)
10 End position LED yellow
11 Jumper for assignment of end position LEDs
12 End position LED green
13 Adapter kit
14 Form seal
15 O-ring 2 pcs
16 Switch spindle
17 Guide element
18 Puck holder
19 Guide rail
20 Supports for pilot air ports

Top Control Head 8697

The pneumatic control unit Type 8697 is optimized for integrated mounting on the **21xx** and the **20xx** series.
Integrated pilot valve with manual override. Integrated control air routing. Automatic end position adjustment

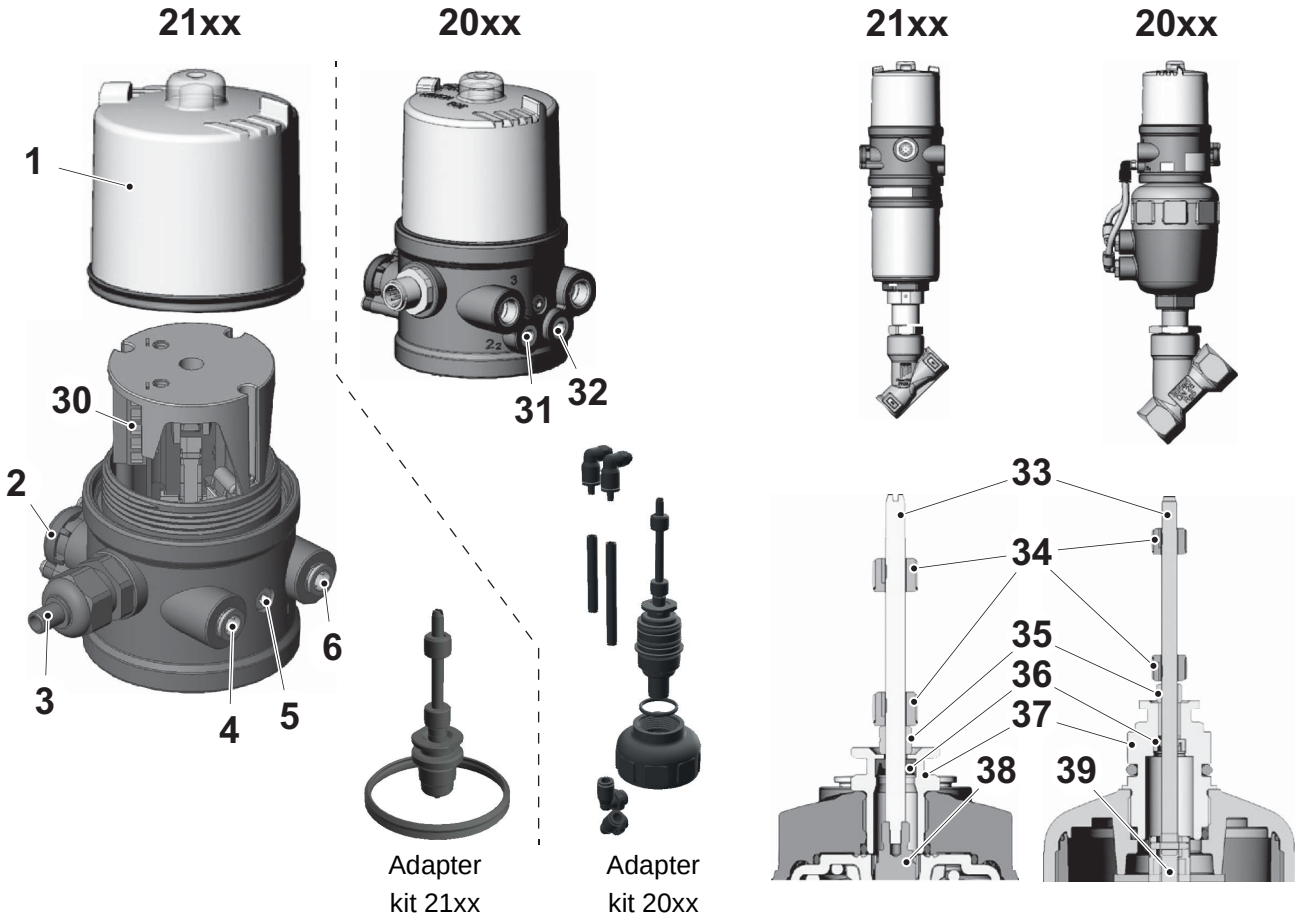

1 Cap
2 Pressure limiting valve
3 Electrical connection
4 Air exhaust port
5 Fastening screw 2 pcs
6 Pilot air port
30 Terminal block
31 Pilot air outlet
32 Pilot air outlet
33 Switch spindle
34 Switch cam
35 Spacer sleeve
36 Groove ring
37 Guide element
38 Spindle extension
39 Spindle (actuator)

Maintenance

Actuator 21xx + Top 8695

Change Top Control Head

DANGER!

Risk of injury!
Shut off the electrical supply and depressurize the top unit before dismantling.

a) Shut off the electrical supply and depressurize the top unit.

b) Disconnect the air pressure lines.

c) Disconnect the electrical connector.
If the top unit is not equipped with an electrical connector:
- Open the housing by unscrewing the transparent cover counterclockwise.
- Observantly note places and colours of the wires.
- Disconnect the wires.

d) Loosen the two screws (5) and pull the control unit from the actuator.

2.2tf508413.en

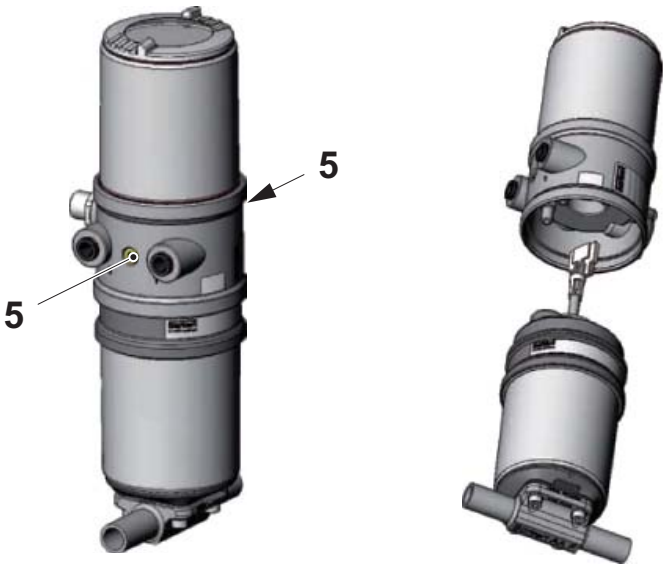

5 Screw 2 pcs

(Cont'd)

(Cont'd)

e) Pull of the push holder

f) Disassemble the switch spindle, with a screwdriver at the slot on its top.

g) Disassemble the guide element

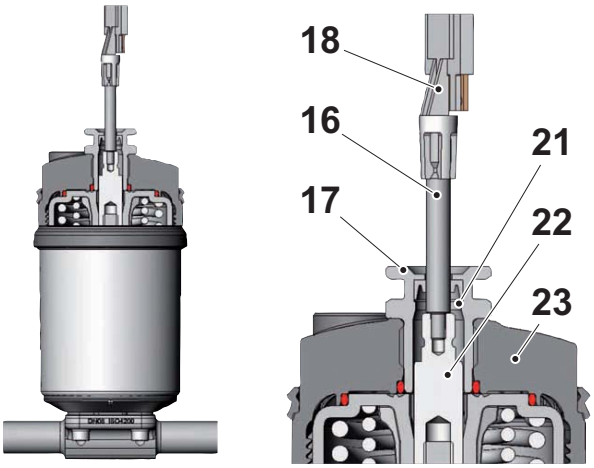

16 Switch spindle
17 Guide element
18 Puck holder

h) Push the switch spindle through the guide element. The groove ring must already be pre-assembled in the central screw and must be “locked into position” in the undercut.

2.2tf508413.en

Note! Screw locking paint may contaminate the groove ring!
Do not apply any screw locking paint to the switch spindle!

i) To secure the switch spindle, place a small amount of screw locking paint (Loctite 290) in the tapped bore of the spindle extension (22).

j) Screw the guide element to the actuator cover. Maximum torque: 5 Nm.

k) Screw switch spindle onto the spindle extension. To do this, there is a slot on the upper side. Maximum torque: 1 Nm.

l) Push puck holder onto the switch spindle and lock into position. Ensure that the puck holder is situated flat on the guide rail.

(Cont'd)

(Cont'd)

m) Remove the old form seal (14) and pull the new one onto the actuator cover. Smaller diameter points upwards.

n) Change to new O-rings (15) in the pilot air ports.

o) Before assembling the control head to the actuator, align the puck holder to the guide rail and the supports to the pilot air ports.

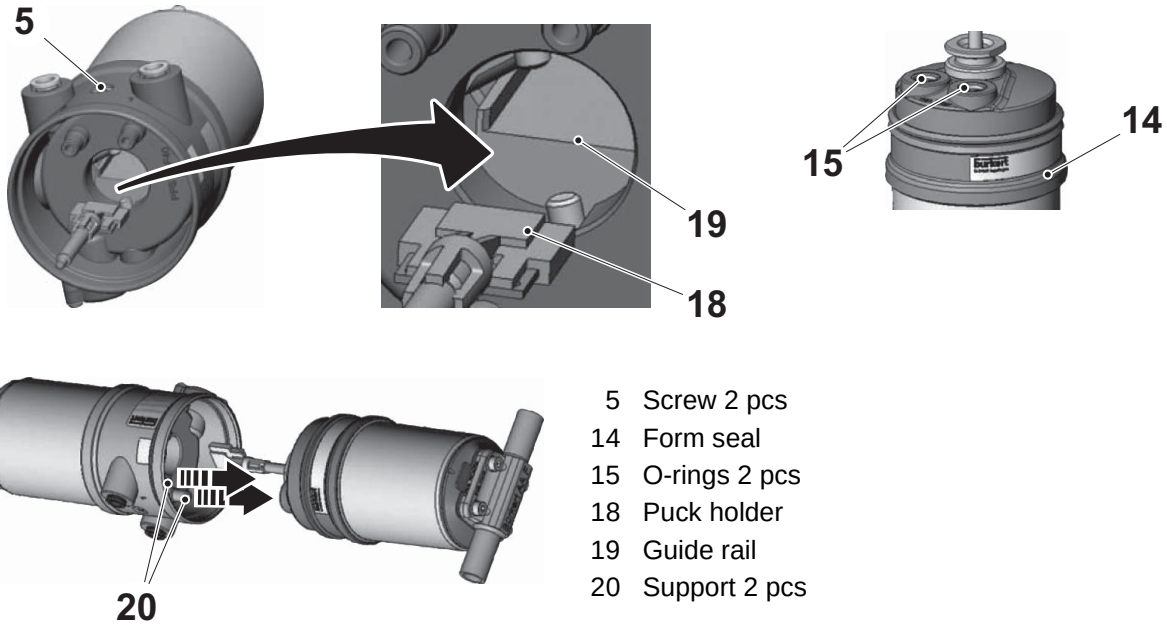

5 Screw 2 pcs
14 Form seal
15 O-rings 2 pcs
18 Puck holder
19 Guide rail
20 Support 2 pcs

2.2tf508413.en

p) Tighten the screws (5). Maximum torque: 0.5 Nm.

q) Connect the air pressure lines and the electrical connector.

Calibrate Control Head 8695

DANGER!

Risk of electric shock!
Observe applicable accident prevention and safety regulations for electrical equipment!

DANGER!

Risk of injury!
The valve may change position during calibration. Never run the teach function while a process is running. Secure system from unintentional activation.

The unit is equipped with a “Teach Function” for calibrating the end position.

Note! Before you can actuate the Teach function, you must mount the control on the housing, connect the power supply and connect the compressed air supply.

a) Open the control head by turning the cap (1) counter-clockwise.

b) Hold down the button for actuating the Teach function for approximately 5 seconds.

c) Put the cap on the control head and tighten.

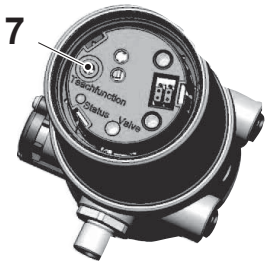

7 Teach function button

2.2tf508413.en

Chronological description of the Teach function

- the lower position is measured internally
- the valve is switching
- the drive moves automatically to the upper position
- the upper position is measured internally
- the valve is turned off
- the drive moves back to the home position

(Cont'd)

(Cont'd)

Status LED yellow

Yellow LED	
flashes	Teach function is running
flickers	Puck PCB or puck holder not available Action: Insert puck PCB or puck holder

Valve LED yellow

The yellow LED indicates whether the pilot valve is actuated (LED is lit yellow).

End position LED green and yellow
Factory setting

LED	Device status
Green LED on	End position bottom
Yellow LED off	End position top

2.2tf508413.en

Jumper function

Colour assignment of the end positions with the jumpers. Sets whether each colour applies to the Top (end position top) or Bot (end position bottom).

Jumper settings	Function
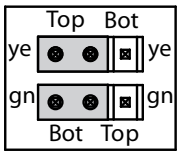	Jumper setting 1: In the end position top (Top), the yellow LED is lit; in the end position bottom (Bot), the green LED is lit.
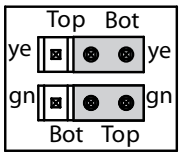	Jumper setting 2: In the end position top (Top), the green LED is lit; in the end position bottom (Bot), the yellow LED is lit.

Actuator 20xx / 21xx + Top 8697

Change Top Control Head

DANGER!

Risk of injury!
Shut off the electrical supply and depressurize the top unit before dismantling.

Disassemble

a) Shut off the electrical supply and depressurize the top unit.

b) Disconnect the air pressure lines.

c) Disconnect the electrical connector.
If the top unit is not equipped with an electrical connector:
- Open the housing by unscrewing the transparent cover counterclockwise.
- Observantly note places and colours of the wires.
- Disconnect the wires.

d) Loosen the two screws (5) and pull the control unit from the actuator.

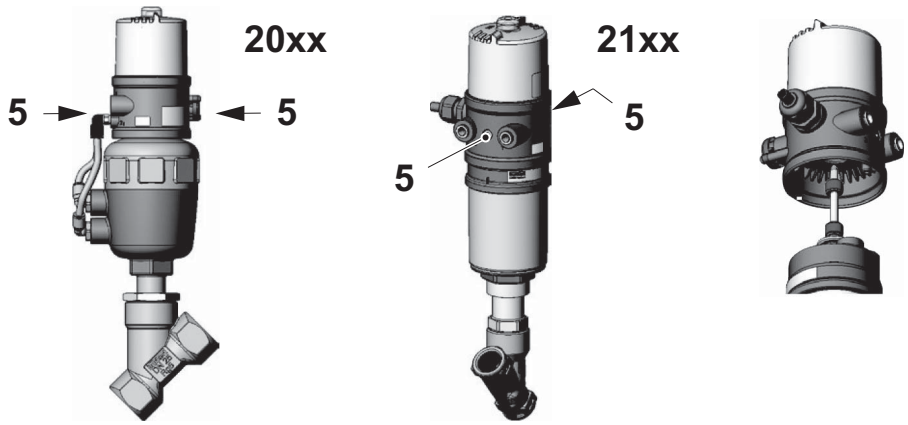

2.2tf508413.en

5 Screw 2 pcs

(Cont'd)

(Cont'd)

e) Disassemble the switch spindle (33), with a screwdriver at the slot on its top.

f) Disassemble the guide element (37).

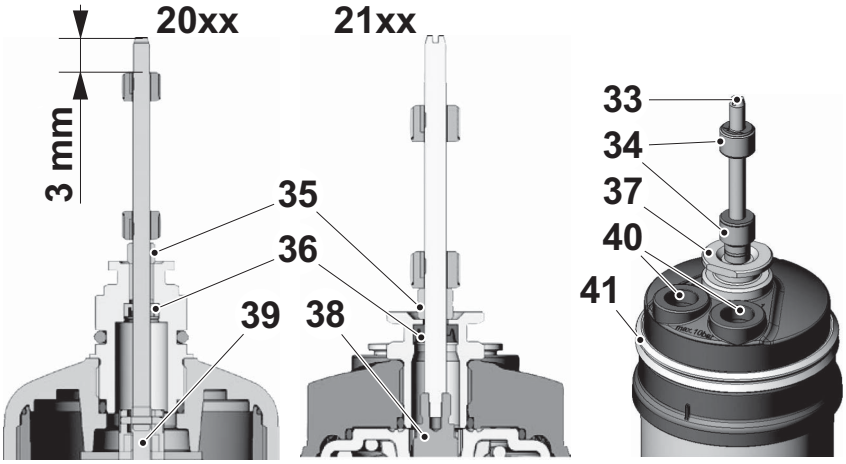

33	Switch spindle	38	Spindle extension
34	Switch cam 2 pcs	39	Spindle (actuator)
35	Spacer sleeve	40	O-ring 2 pcs
36	Groove ring	41	Form seal
37	Guide element		

2.2tf508413.en

Assemble

a) Push the switch spindle (33) through the guide element (37). The groove ring (36) must already be pre-assembled in the central screw and must be “locked into position” in the undercut.

Note! Screw locking paint may contaminate the groove ring (36)!
Do not apply any screw locking paint to the switch spindle!

b) To secure the switch spindle, apply some screw locking paint (Loctite 290) in the tapped bore of the spindle extension (38) in the actuator.

(Cont'd)

(Cont'd)

c) Change to new O-rings (40) in the pilot air ports.

Note! Collets must not be fitted at pilot air ports!

d) Screw the guide element to the actuator cover (maximum torque: 5 Nm).

e) Screw switch spindle (33) onto the spindle extension (38). To do this, there is a slot on the upper side (maximum torque: 1 Nm).

f) Push spacer sleeve (35) onto the switch spindle (33) up to the guide element (37).

g) Position switch cams (34) on the switch spindle (33):

- Push lower switch cam up to the spacer sleeve.
- Push upper switch cam until 3 mm from the start of the switch spindle.

h) **If 21xx**: Remove the old form seal (41) and pull the new one onto the actuator cover. Smaller diameter points upwards.

i) Mount the control unit at the actuator.

j) Tighten the screws (5). Maximum torque: 0.5 Nm.

k) **If 20xx**: Fit the plug-in hose connectors from the the adapter kit.

l) Connect the air pressure lines and the electrical connector.

2.2tf508413.en

Calibrate Control Head 8697

DANGER!

Risk of electric shock!
Observe applicable accident prevention and safety regulations for electrical equipment!

DANGER!

Risk of injury!
The valve may change position during calibration. Never run the teach function while a process is running. Secure system from unintentional activation.

a) Unscrew the transparent cap (1).

b) Ensure that the distance between both switch cams (34) is maximum.

c) Pressurize pilot air port 1 (6) with compressed air (5 bar) or, if fitted, actuate the hand lever of the pilot valve in the control unit: Actuator moves to the 2nd end position.
The switch cams (and switch points) have now been set.

d) Check the switching points using suitable measuring equipment.

e) If required, the switch points can still be finely adjusted: Using a screwdriver, push switch cams towards the middle.

f) Check that the seal is correctly positioned in the transparent cap.

g) Fit the cap.

2.2tf508413.en

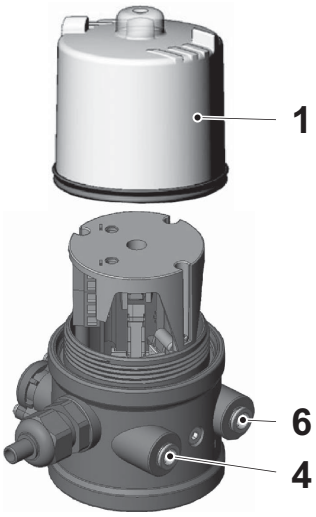

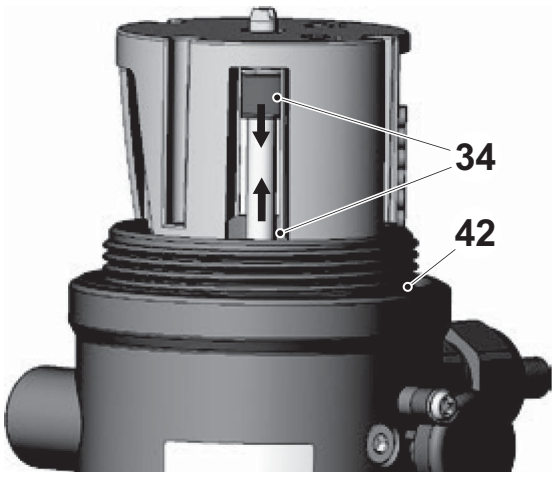

1 Cap
4 Exhaust air connection
6 Pilot air port 1
34 Switch cam 2 pcs
42 Seal

Spare Parts

Not applicable for this component!

2.2tf508414.en

This page intentionally left blank

2.2tf508414.en

Tetra Pak

Maintenance & Spare Parts

Angle Seat Valve

(Bürkert)

2000 INOX

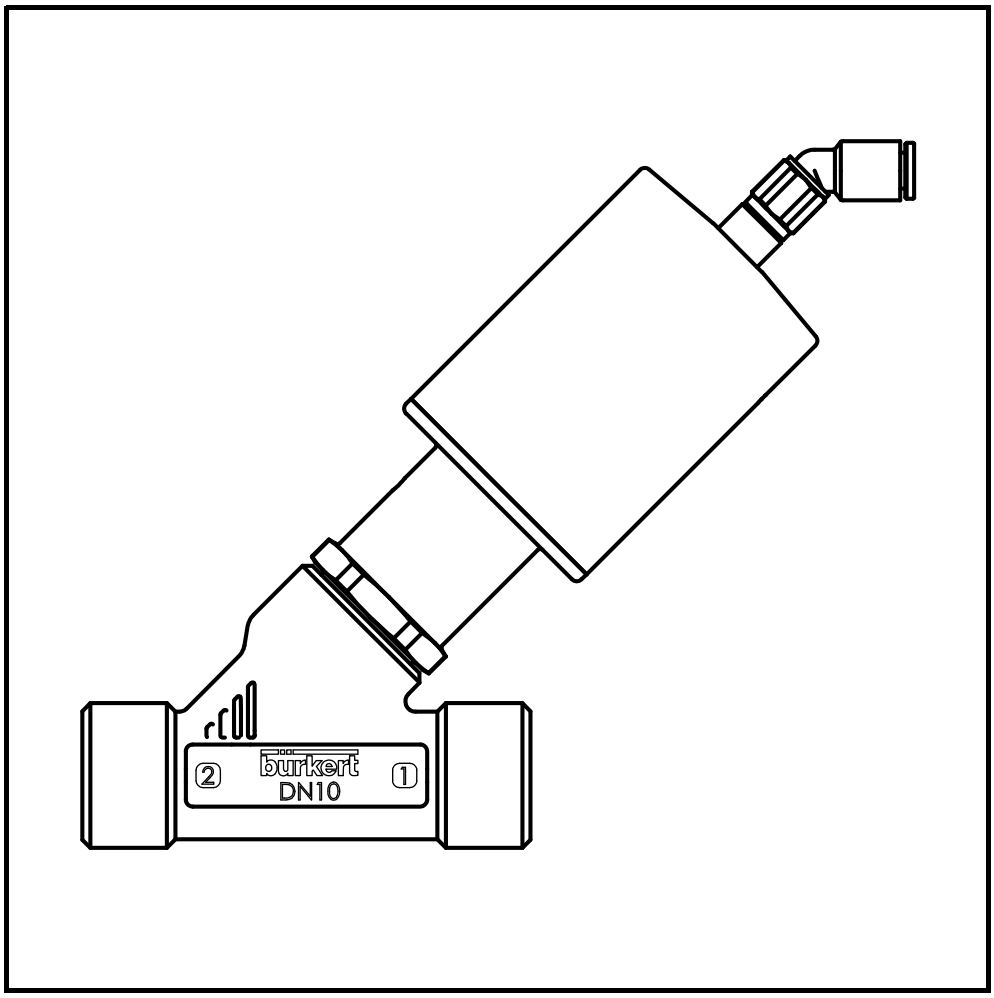

1.0 3282610-0101.fro

Tetra Pak

Doc No. 3282610-0101

Angle Seat Valve

2000 INOX

This document refers to components specified in Technical Manual, on Maintenance & Spare Parts CD/DVD or on Tetra Pak Intranet.

1.0 3282610-0101.fro

Version 02 Issue 2014-10

Doc No. 3282610-0101

Tetra Pak

Tetra Pak Processing Systems AB

Table of contents

Function Description 1

Maintenance 2

Change Valve Kit 2

Cleaning 4

Troubleshooting. 4

Spare Parts 5

1.0 3282610-0101.TOC

This page intentionally left blank

Function Description

Type 2000 INOX 2/2-way is an angle seat valve for liquid and gaseous media.

The valve can have one of following two types of control functions:

- **CFA** = normally closed
- **CFB** = normally open

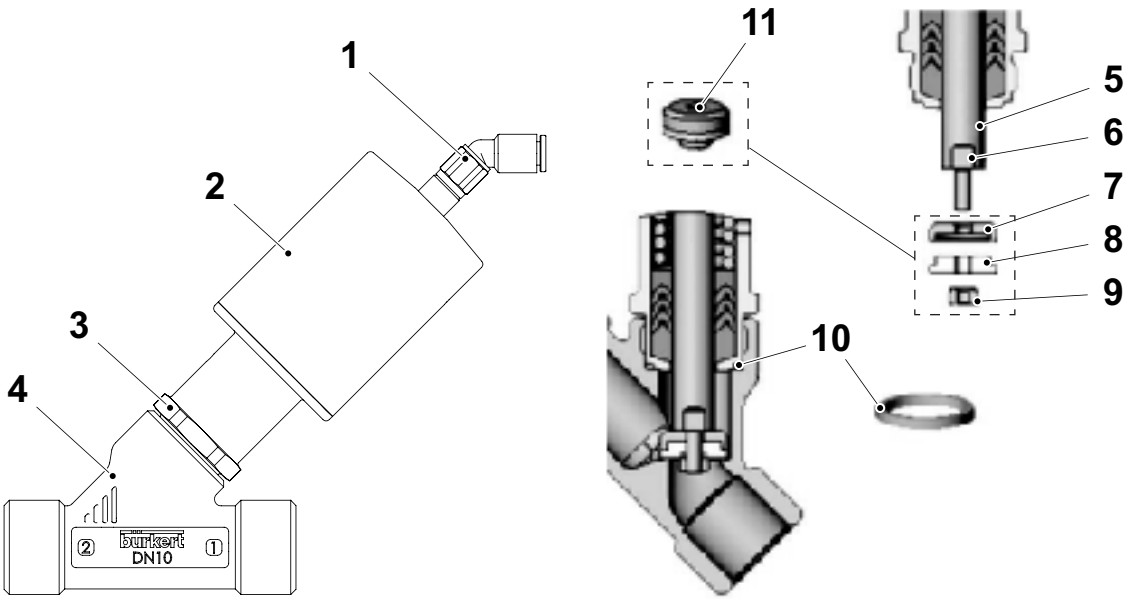

2.2tf508925.en

1	Pilot air port	7	Seal holder
2	Actuator	8	Seat seal
3	Hexagonal grip	9	Centering nut
4	Valve body	10	Graphite seal
5	Spindle	11	Moving disc
6	Wrench flat		

Maintenance

Change Valve Kit

WARNING!

Risk of injury!
Make sure before dismantling, that the pipeline is drained and free from media.

Note! It is advisable to make this action in connection with the replacement of the actuator.

a) Ensure that the valve is in open position. If CFA-type: pressurize the pilot air port (1) with 5.5 bar.

b) Unscrew actuator (2) from valve body (4), at the hexagonal grip (3), using an open-end wrench.

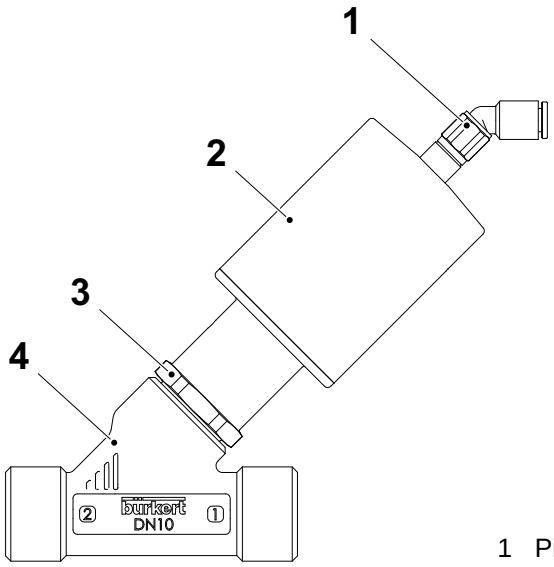

2.2tf508925.en

1 Pilot air port
2 Actuator
3 Hexagonal grip
4 Valve body

(Cont'd)

(Cont'd)

Caution! Counterhold the spindle (5) on the wrench flat (6) using an open-end wrench.

c) Carefully loosen the centering nut (9) using a suitable open-end wrench to prevent damaging the spindle thread.

d) Remove seal holder (7) together with seat seal (8).

e) Attach new seal holder and new seat seal to the spindle.

f) Apply adhesive (Loctite 640) to spindle thread.

g) Refit the centering nut (9) and tighten using an open-end wrench.

h) Replace the graphite seal (10), if it is worn.

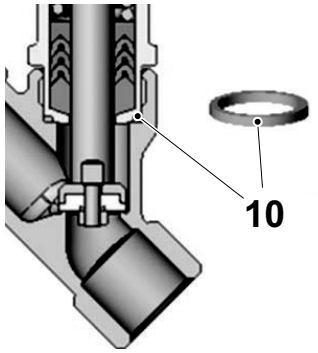

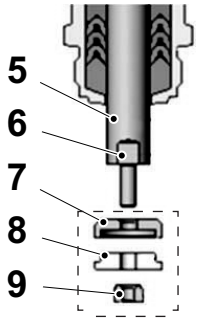

5 Spindle
6 Wrench flat
7 Seal holder
8 Seat seal
9 Centering nut
10 Graphite seal

2.2tf508925.en

Caution! Grease pipe thread before re-installing the actuator (e.g. with Klüber paste UH1 96-402).

i) Ensure that the valve is in open position and then assemble the actuator to the valve body.

Caution! Observe tightening torque (40 ± 3 Nm)!

Cleaning

Commercially available cleaning agents can be used to clean the surface of the device.

Troubleshooting

Malfunction	Cause	Remedial action
Actuator does not switch	Control pressure too low	See pressure specifications on the rating plate
	Medium pressure too high	See pressure specifications on the rating plate
	Direction of flow reversed	See identification on the rating plate
Valve is not sealed	Dirt between seal and valve seat	Install dirt trap
	Seat seal worn	Install new moving disc
	Seat seal damaged, e.g. by foreign objects, swarf or similar	Install new moving disc
	Direction of flow reversed	See identification on the rating plate
	Control pressure too low	See pressure specifications on the rating plate
	Medium pressure too high	See pressure specifications on the rating plate
Valve is leaking on the release bore	Spindle seal worn	Replacing actuator

2.2tf508925.en

Spare Parts

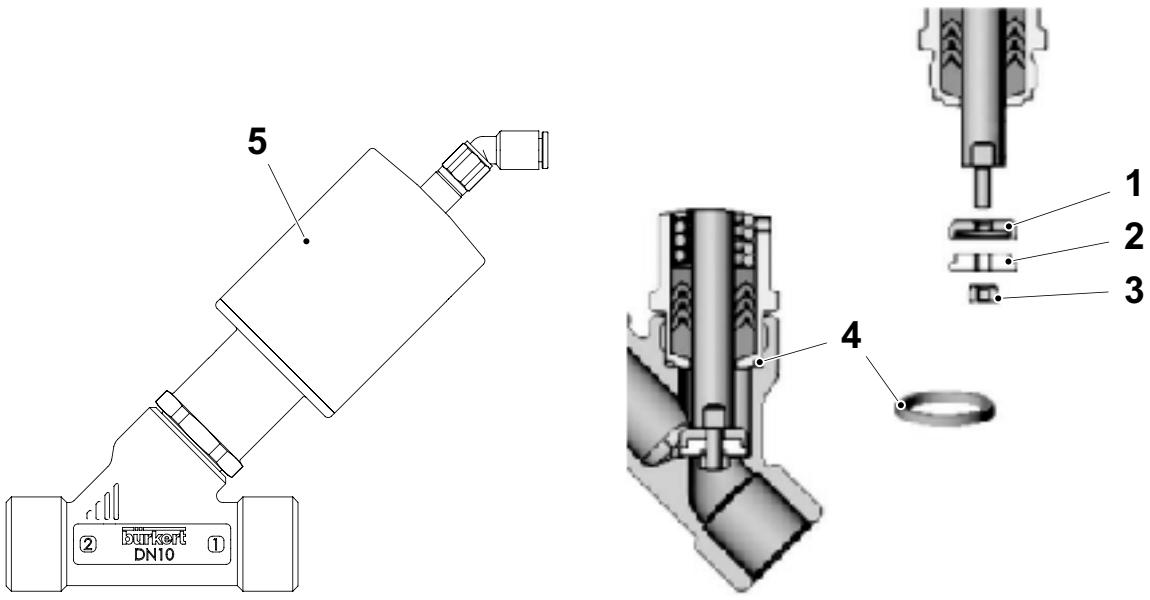

2.2tf508926.en

Size	Spare part article No.	Description	Included parts	Pos.	Qty
Wet end					
DN10 - DN15	90518-9008	Service kit	Seal holder Seat seal Centering nut Graphite seal	1 2 3 4	1 1 1 1
Complete actuator with valve plug					
DN10 - DN15	90512-7419	Actuator CFA (Normally closed)		5	1
	90516-0888	Actuator CFB (Normally open)			

Tetra Pak

Maintenance & Spare Parts

Pressure gauge

(Wika)
233.50 / 2750



1.0 1212430-0101.fro

Tetra Pak

Doc No. 1212430-0101

Pressure gauge

233.50 / 2750

This document refers to components specified in Technical Manual, on Maintenance & Spare Parts CD/DVD or on Tetra Pak Intranet.

1.0 1212430-0101.fro

Version 04 Issue 2015-11

Doc No. 1212430-0101

Tetra Pak

Tetra Pak Processing Systems AB

Table of contents

Maintenance 1

Description 1

Check for leakage 1

Change sealing 1

Spare Parts 2

Not applicable for this component! 2

1.0 1212430-0101.TOC

This page intentionally left blank

Maintenance

Description

Suitable for environments compatible with copper alloy wetted parts where vibration or pressure pulsation occur and for gaseous or liquid media that will not obstruct the pressure system.

Check for leakage

Check if there is any leakage at the connection between the indicator and the pipeline, if nesecarry renew the sealing tape or sealing compound.

Change sealing

WARNING!

Risk of injury!
Make sure that the pipelines are drained and free from media before servicing the indicator! Never service the indicator when it is hot!

Remove pressure indicator from pipeline.

Remove the remains of sealing tape or sealing compound from the threads of the indicator.

Fit sealing tape (Teflon tape or similar) or sealing compound (Loctite or similar) on the threads of the indicator.

Fit the pressure indicator to the pipeline.



1.0tf501121.en

Spare Parts

Not applicable for this component!

2.2TF500785.EN

This page intentionally left blank

2.2TF500785.EN

Tetra Pak

Maintenance & Spare Parts

Pressure switch

(Endress + Hauser)
Ceraphant T PTP31/PTP35



1.0 1218198-0101.fro

Tetra Pak

Doc No. 1218198-0101

Pressure switch

Ceraphant T PTP31/PTP35

This document refers to components specified in Technical Manual, Maintenance & Spare Parts CD/ DVD or on Tetra Pak Intranet.

1.0 1218198-0101.fro

Version 01

Doc No. 1218198-0101

Tetra Pak

Tetra Pak Processing Systems AB

Maintenance 1

Description 1

Change transmitter 2

Navigating in the operating menu 3

Operating menu structure 4

Trouble-shooting 5

Spare Parts 6

Not applicable for this component! 6

1.0 1218198-0101.TOC

This page intentionally left blank

Maintenance

Description

The Ceraphant T is a pressure switch for measuring and monitoring absolute and gauge pressures. The pressure switch is equipped with a piezoresistive measuring cell and metallic measuring diaphragm. The switch also comes in a hygienic version.

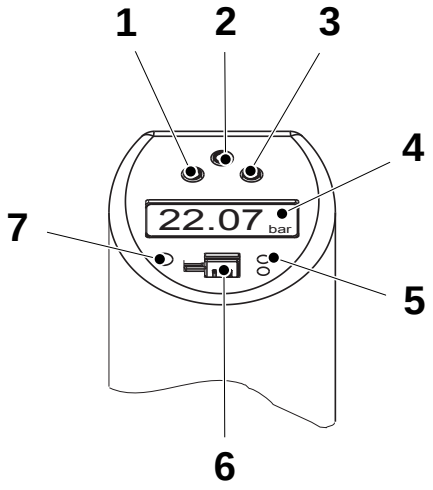

1 Operating key “-”
2 Operating key “E”
3 Operating key “+”
4 Digital display
5 Switching status LED, yellow
6 Communications jack for PC
7 Status LED

Switching status LED yellow:
LED on = switch closed
LED off = switch open

LED for status:
Green = OK
Red = error
Red/ green - flashing = warning

2.2Tf503581.en

Change transmitter

WARNING!

Risk of injury!
Make sure that the pipelines are drained and free from media before changing the transmitter!
Never change the transmitter when it is hot!

WARNING!

Risk of injury!
Shut off the power supply before changing the transmitter!

a) Disconnect the transmitter wires (1) at the plug (2).
b) Remove the transmitter (3) from the process connection.
c) Change the transmitter.
d) Reassemble in reverse order.

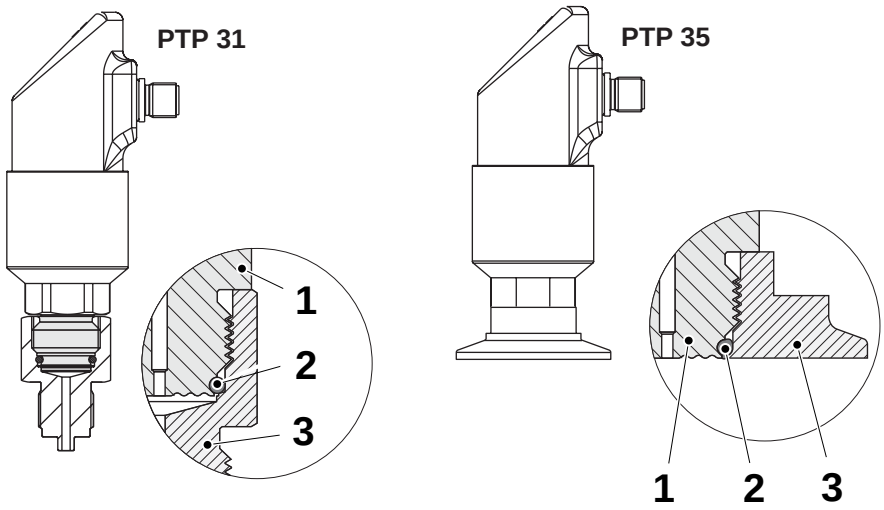

2.2Tf503581.en

1 Cover lid
2 Transmitter wires
3 Terminal
4 Cable bushing
5 Transmitter
6 Process connection

Navigating in the operating menu

A Function group selection
B Function selection



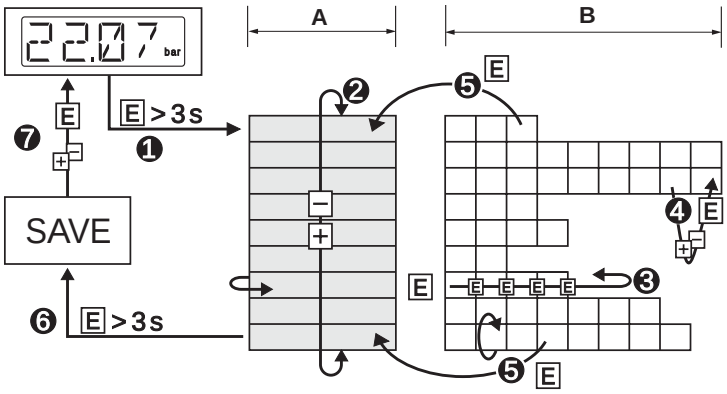

1. Enter the operating menu
   – Press the E key for longer than 3 s
2. Select the "Function group" with the + or - key
3. Select the "Function" with the E key
4. Enter or change parameters with the + or - key
   – Then return to "Function" with the E key Note: If software locking is enabled, it must be disabled before making entries or changes by entering the code selected
5. Press the E key several times to return to the "Function group"
6 Jump back to the measuring position (Home position)
   – Press the E key for longer than 3 s
7. Query to save data (select "YES" or "NO" with the + or - key)
   – Confirm with the E key

Note! Changes to the parameter settings only become effective if you choose "YES" when asked to save data.

2.2Tf503581.en

Operating menu structure

The structure below shows all the possible fields of the operating menu.

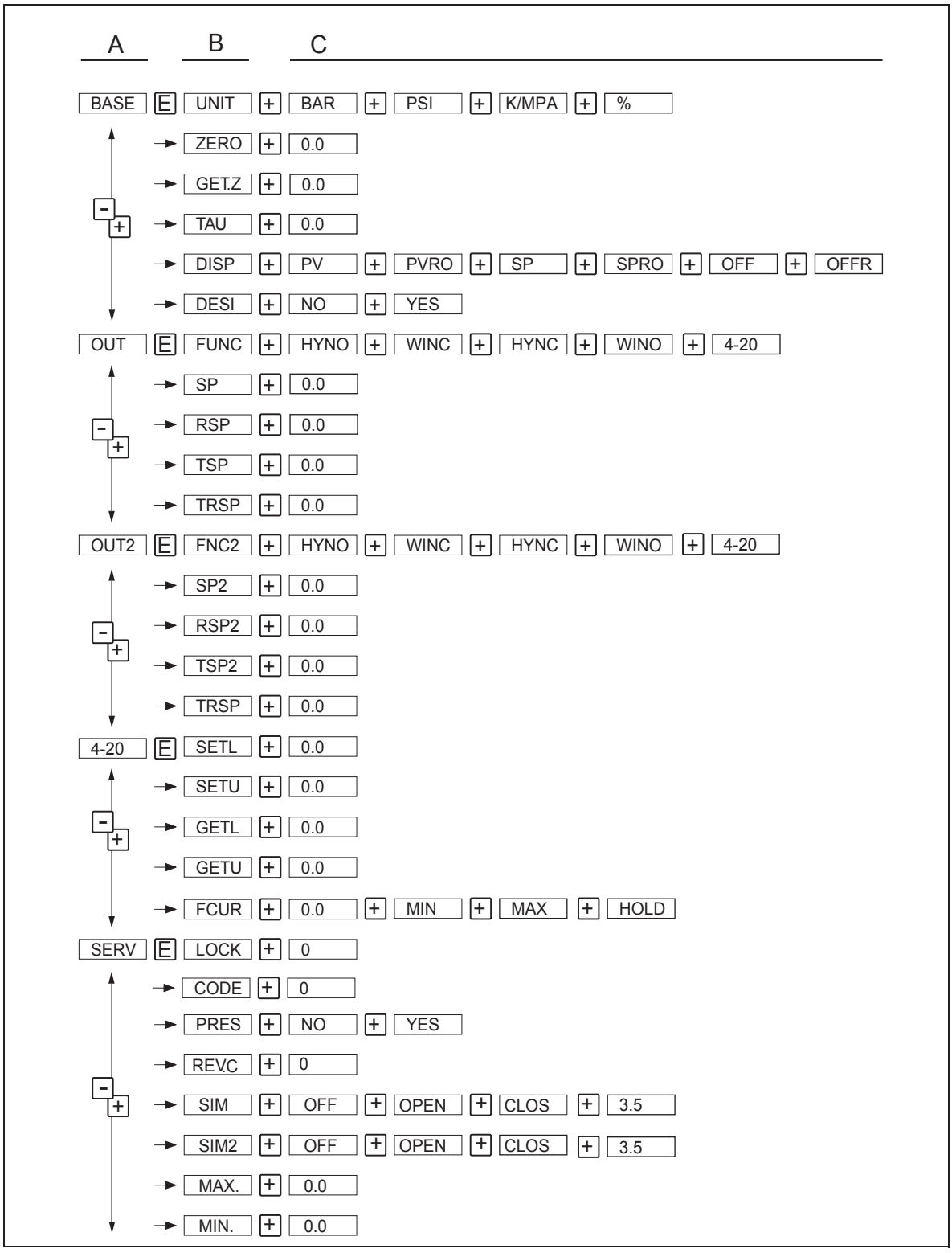

2.2Tf503581.en

Trouble-shooting

Errors and warnings

If an error in the device occurs, the colour of the status LED changes from green to red and the background illumination of the digital display changes from white to red.

The display shows:

- E-code for errors.

In the event of an error message, the measured value is uncertain.

Code	Explanation
E011	Device configuration faulty
E012	Error in measurement or underreach/overreach in SIL mode
E015	Error in EEPROM
E019	Power supply has undervoltage/overvoltage
E020	Error in Flash
E021	Error in RAM
E025	Switching contact 1 is not open although it should be
E026	Switching contact 2 is not open although it should be

- W-code for warnings.

In the event of a warning, the measured value is reliable.

Code	Explanation
W107	Simulation active
W202	Pressure outside the sensor range (not SIL mode)
W209	Device starts
W210	Configuration modified
W212	Sensor signal outside the permitted range (not SIL mode)
W250	Number of switch cycles exceeded
W270	Short-circuit at output 1
W280	Short-circuit at output 2

2.2Tf503581.en

Spare Parts

Not applicable for this component!

2.2TF500785.EN

This page intentionally left blank

2.2TF500785.EN

Tetra Pak

Maintenance & Spare Parts

Magnetic Flow Meter

(Endress+Hauser)

Promag 10H/50H/53H/55H



1.0 1218415-0101.fro

Tetra Pak

Doc No. 1218415-0101

Magnetic Flow Meter

Promag 10H/50H/53H/55H

This document refers to components specified in Technical Manual, on Maintenance & Spare Parts CD/DVD or on Tetra Pak Intranet.

1.0 1218415-0101.fro

Version 09 Issue 2016-08

Doc No. 1218415-0101

Tetra Pak

Tetra Pak Processing Systems AB

Function description 1

General 1

Setup 2

Operation display 4

Maintenance 7

Wiring 7

Wiring remote version 9

Change transmitter 10

Change sensor 11

Change display 12

Change fuse 13

Cleaning 13

Troubleshooting 14

Spare parts 18

1.0 1218415-0101.TOC

This page intentionally left blank

Function description

General

This flow transmitter is using Faraday’s law of induction which states that a voltage is induced in a conductor moving in a magnetic field. In electromagnetic measuring, the flowing medium corresponds to the moving conductor. The induced voltage is proportional to the flow speed and is detected by two measuring electrodes and transmitted to the amplifier. Flow volume is computed on the basis of the pipe's diameter. The constant magnetic field is generated by a switched direct current of alternating polarity.

The measuring system consists of a transmitter and a sensor which form a single mechanical unit. Promag has a touch control used without opening the housing, and has a four-line display.

2.2Tf503725.en

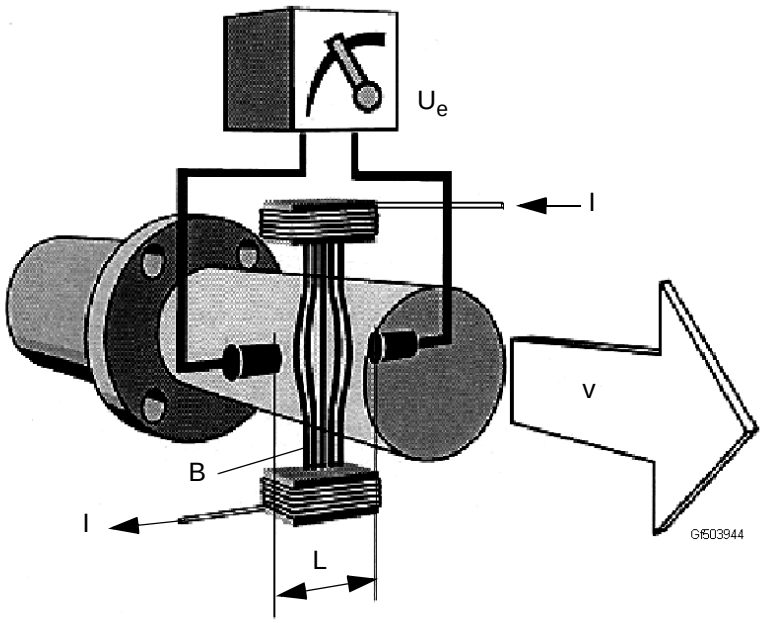

$U_e = B \times L \times v$

$Q = A \times v$

U_e = Induced voltage
B = Magnetic induction (magnetic field)
L = Electrode gap
v = Flow speed
Q = Volume flow
A = Pipe cross-section
I = Current strength

Setup

Also continuing below

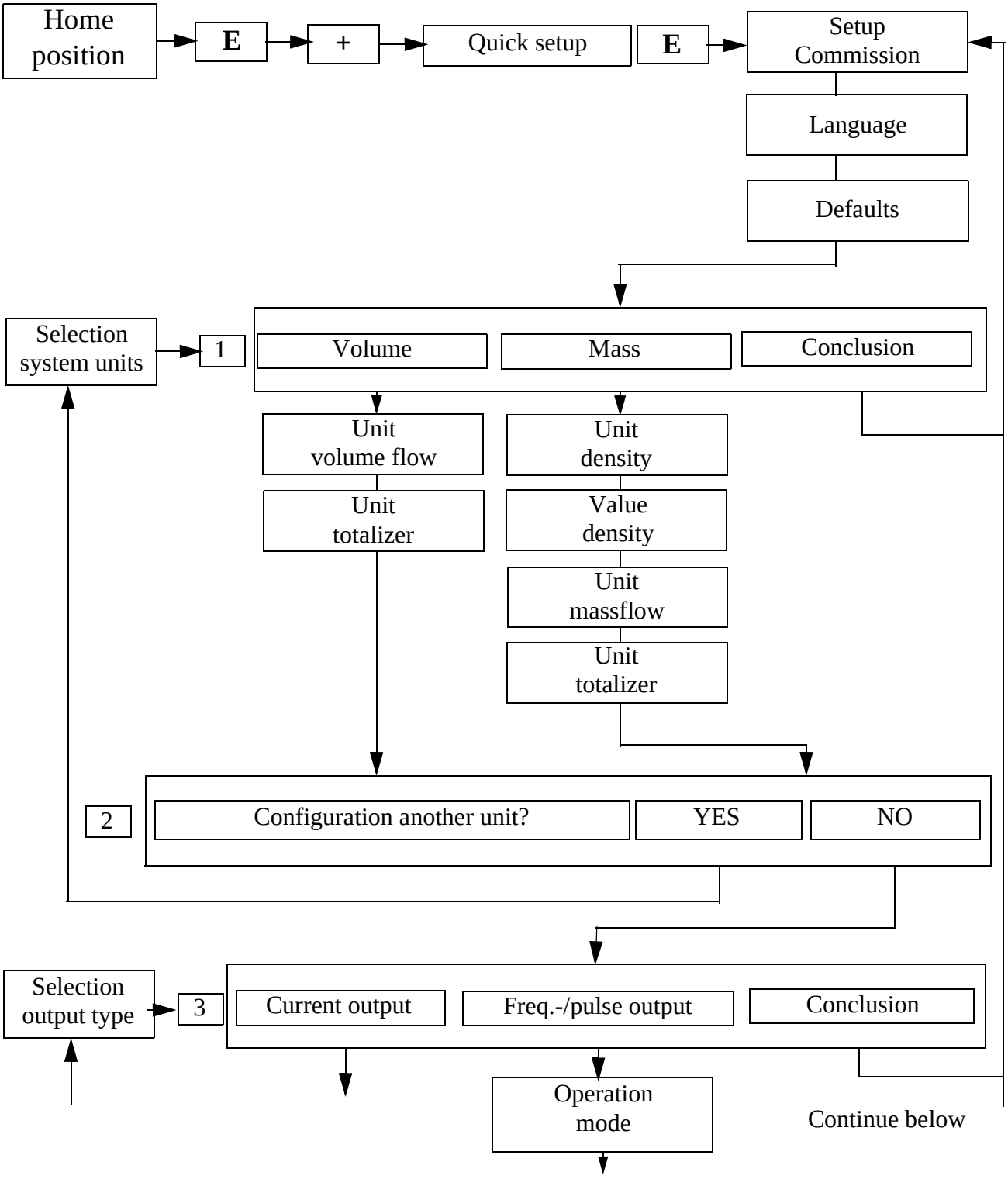

(Cont'd)

(Cont'd)

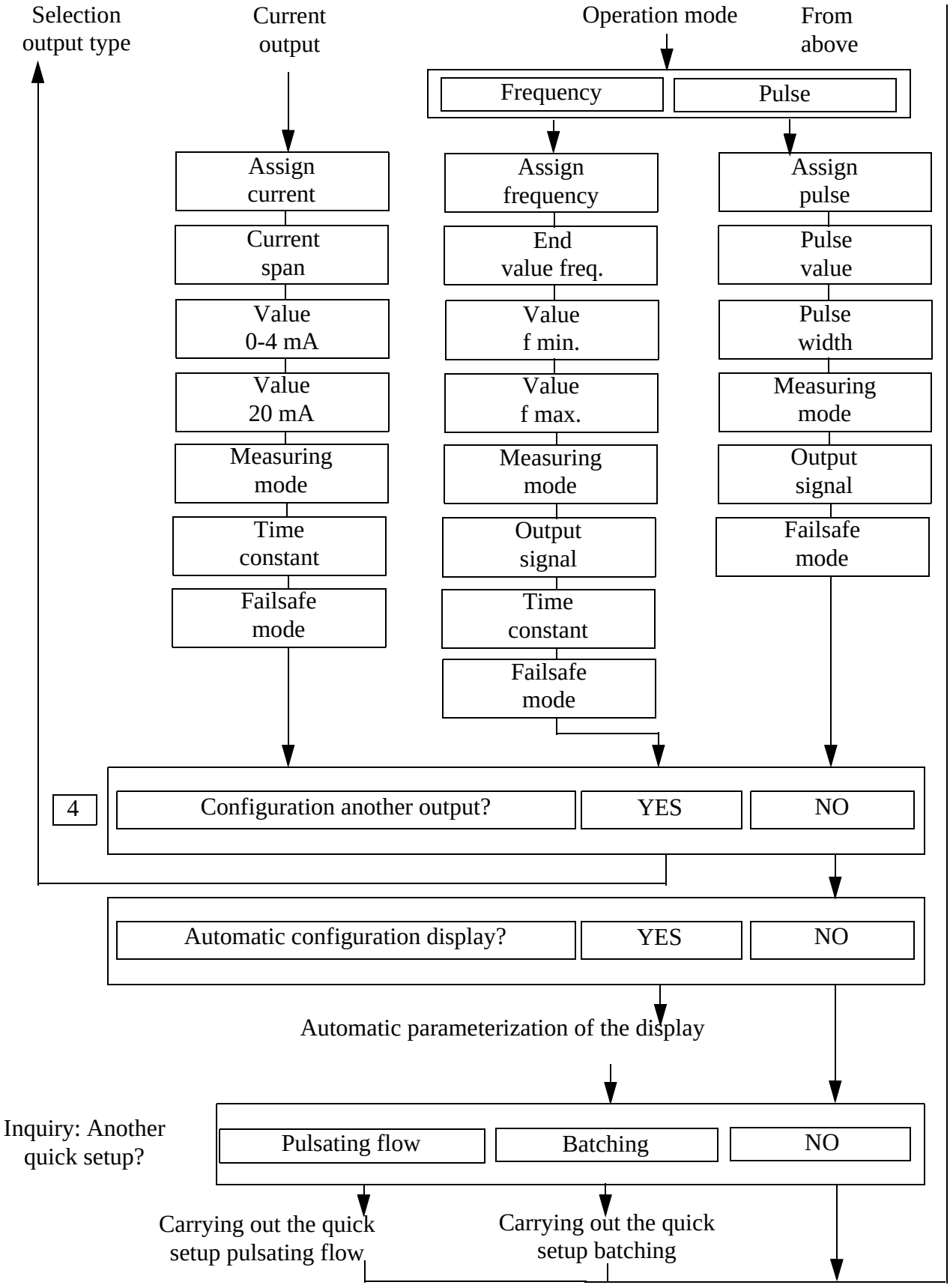

2.2Tf503725.en

Operation display

The local display (17) enables you to read all important parameters directly at the measuring point and configure the device using the setup (see chapter Setup) or the function matrix (see below in Function matrix).

The display as it appears when normal measuring is in progress is known as the HOME position, operating mode.

Keys

Plus / minus keys

- HOME position, direct access to totalizer values and actual values of inputs /output.
- Enter numerical values, select parameters.
- Select different blocks, groups or function groups within the function matrix.

Press the +/- keys simultaneously to trigger the following functions:

- Exit the function matrix step by step, HOME position.
- Press and hold down +/- keys for longer than 3 seconds. Return directly to the home position.
- Cancel data entry.

Enter key

- HOME position, entry into the function matrix.
- Save the numerical values you enter or settings you change.

2.2Tf503725.en

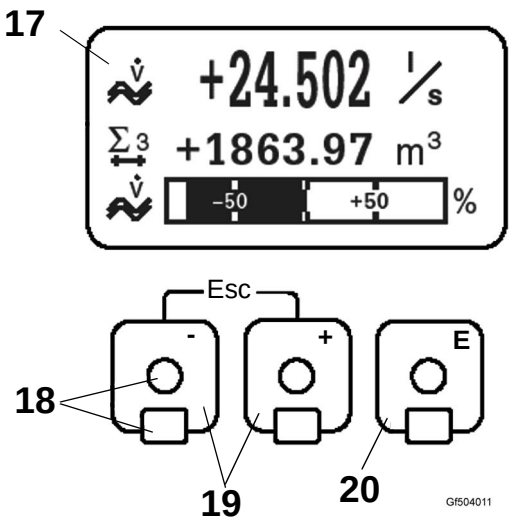

17 Display
18 Optical sensors for touch control
19 Plus / minus keys
20 Enter key

Display (operation mode)

The display area consists of three lines in all; this is where measured values are displayed, and/or status variables (direction of flow, partially filled pipe, barg raph, etc.).

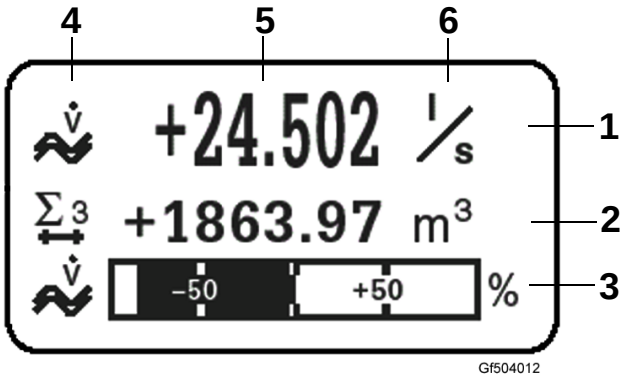

1 Main line shows primary measured values, e.g. volume flow in [l/s].
2 Supplementary line shows supplementary measured variables, e.g. totalizer No. 3 in [m3].
3 Information line shows additional information on the measured variables, e.g. bar graph of the limit value reached by the volume flow.
4 Info icons field: Icons representing additional information on the measured values are shown in this field.
5 Measured values field: The current measured values appear in this field.
6 Unit of measure field: The units of measure and time defined for the current measured values appear in this field.

2.2Tf503725.en

Function matrix

a) HOME position -> [E] -> enter the function matrix.

b) Select a block (e.g. OUTPUTS).

c) Select a group (e.g. CURRENT OUTPUT 1).

d) Select a function group (e.g. CONFIGURATION).

e) Select a function (e.g. TIME CONSTANT).

Change parameter / enter numerical values:

[+] [-] -> Select or enter enable code, parameters or numerical values.

[E] -> Save your entries.

f) Exit the function matrix:

- Press and hold down Esc key [-] [+] for longer than 3 seconds -> HOME position.
- – Repeatedly press Esc key [-] [+] -> return step by step to HOME position.

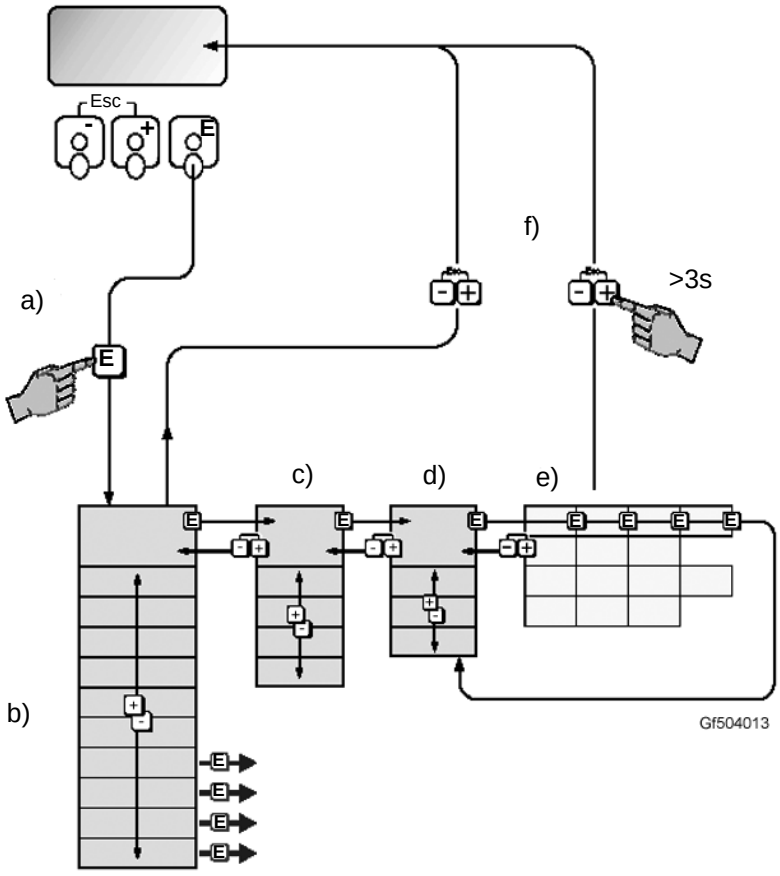

2.2Tf503725.en

Maintenance

WARNING! **Risk of electrical shock!**
Connect the protective conductor to the ground terminal on the transmitter before the power supply is applied (not necessary if the power supply is galvanically isolated)!

WARNING! **Risk of injury!**
Make sure before dismantling that the pipeline is drained and free from media!

WARNING! **Risk of burns!**
Never service the flow meter when it is hot!

Wiring

Always disconnect supply circuits prior to changing any parts. 24 V supply can cause damage to the equipment if not switched off!

a) Unscrew and remove the cover (a) of the transmitter or sensor junction box.

b) Disconnect the wires from the terminals. Disconnection between remote display and sensor: see next chapter.

c) Unscrew cable glands. Remove the power supply cable (b), signal cables (d) and (g) if it is Profibus interface.

d) Assemble in reverse order. Connect the wires (3) in accordance with the graphic below. Screw the cover (1) firmly onto the transmitter.

2.2Tf503726.en

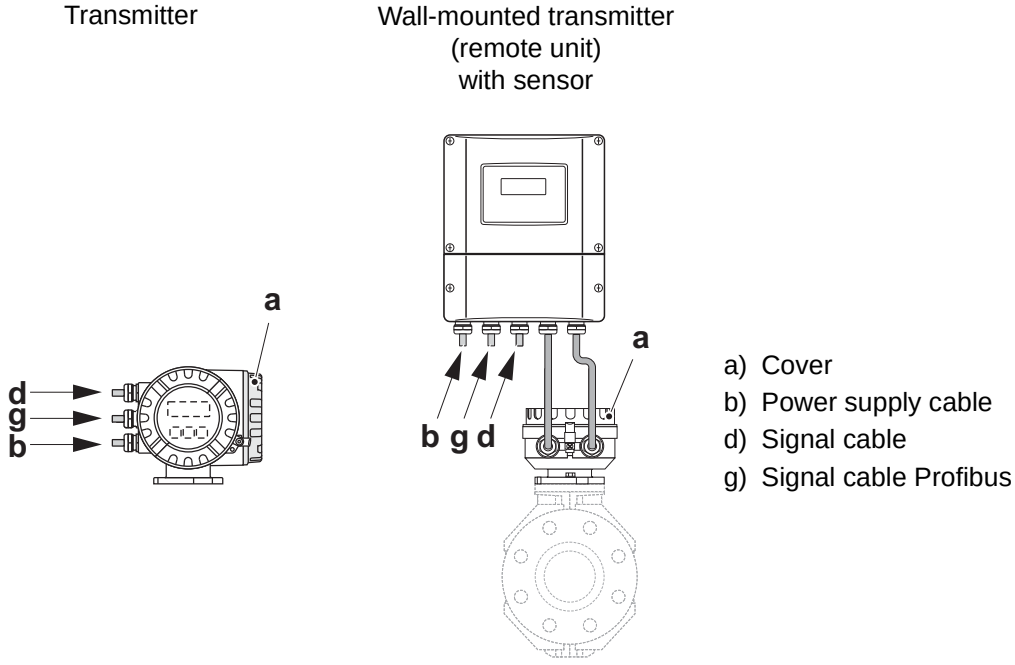

a) Cover of the connection compartment

b) Cable for power supply: 85...260 V AC, 20...55 V AC,16...62 V DC
Terminal No. 1: L1 for AC, L+ for DC
Terminal No. 2: N for AC, L- for DC

c) Ground terminal for protective conductor

d) Signal cable. Fieldbus cable:
Terminal No. 26: DP (A) / PA (+) / FF (+) / MODBUS RS485 (A) / (PA, FF: with reverse polarity protection)
Terminal No. 27: DP (B) / PA (-) / FF (-) / MODBUS RS485 (B) / (PA, FF: with reverse polarity protection)

e) Ground terminal for signal cable shield / Fieldbus cable / RS485 line

f) Service connector for connecting service interface FXA 193

g) Signal cable. Cable for external termination (only for PROFIBUS DP with fixed assignment communication board):
Terminal No. 24: +5 V
Terminal No. 25: DGND

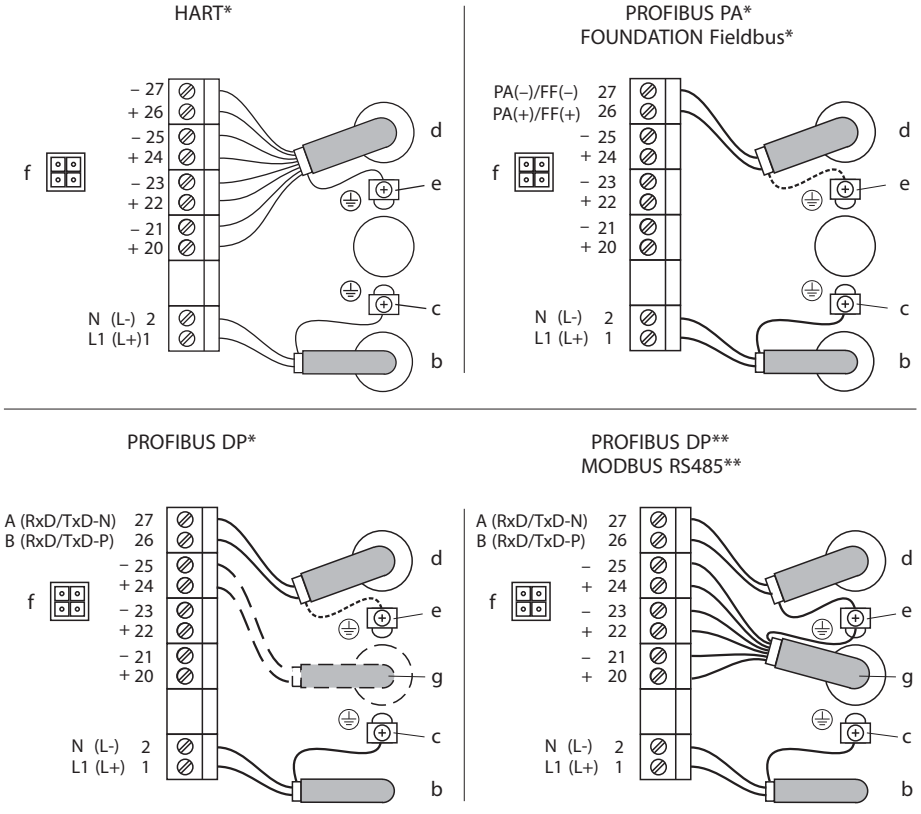

2.2Tf503726.en

*) not changeable communication board

**) changeable communication board

Wiring remote version

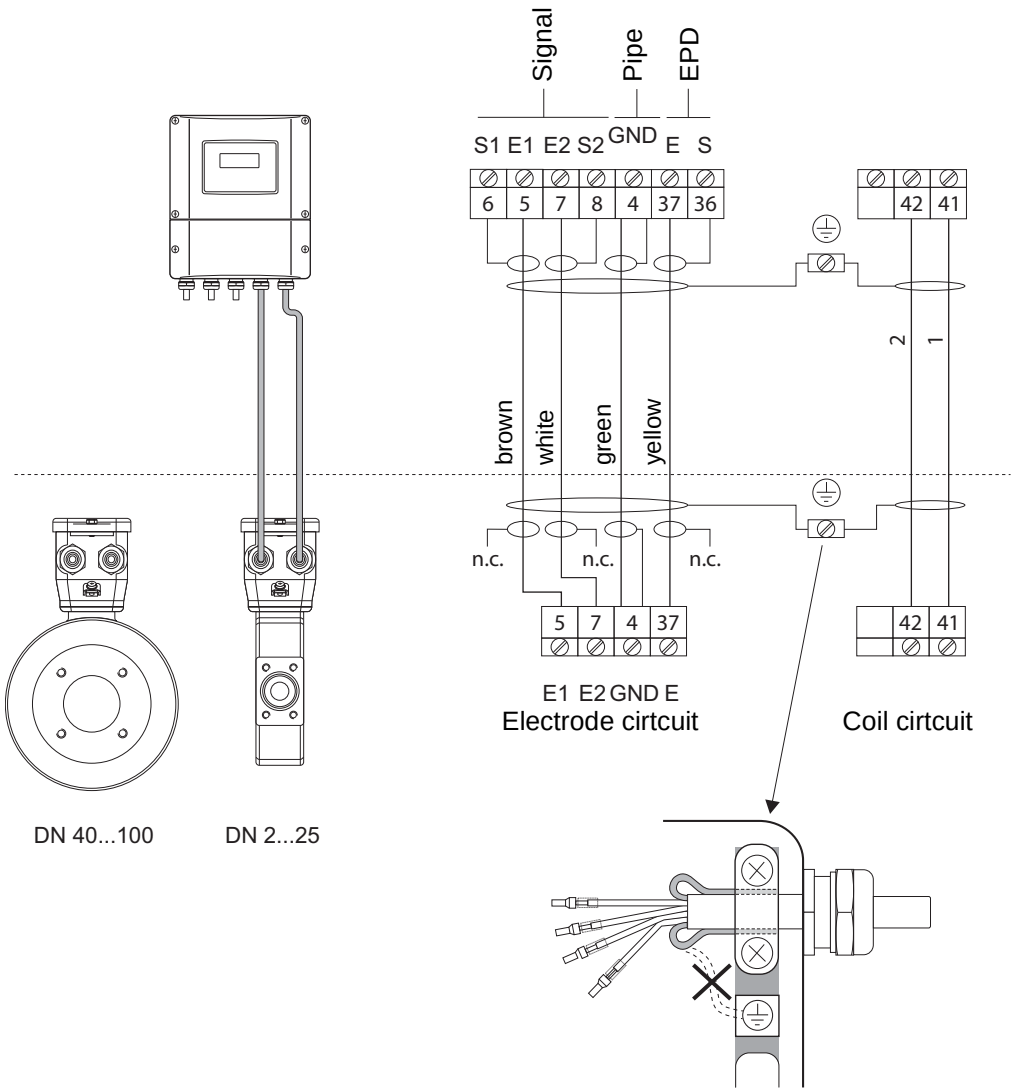

2.2Tf503726.en

Change transmitter

WARNING! **Risk of injury!**
Make sure before dismantling that the pipeline is drained and free from media!

WARNING! **Risk of burns!**
Never service the flow meter when it is hot!

Caution! Always disconnect supply circuits prior to changing any parts. 24 V supply can cause damage to the equipment if not switched off!

Disassemble

a) Loosen the wiring, see chapter **Wiring**.

b) Loosen the two securing screws (8) with a cap key (9).

c) Turn the bayonet catch, on the transmitter (2), as far as it will go.

d) Carefully lift the transmitter as far as it will go.

Assemble

e) Turn the transmitter (2) to the desired position (max. 2 x 90° in either direction).

f) Lower the transmitter into position and re-engage the bayonet catch, on the transmitter.

g) Retighten the two securing screws (8).

2.2Tf503726.en

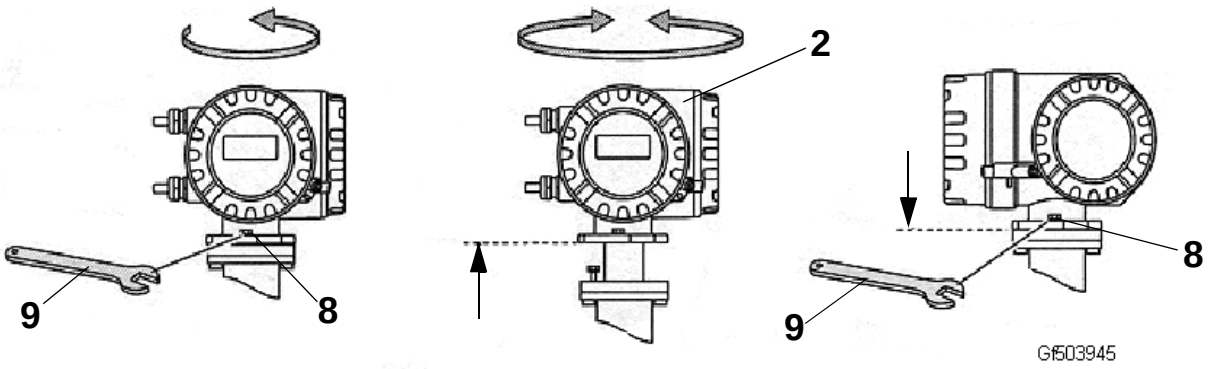

2 Transmitter
8 Securing screw
9 Cap key

Change sensor

WARNING! **Risk of injury!**
Make sure before dismantling that the pipeline is drained and free from media!

WARNING! **Risk of burns!**
Never service the flow meter when it is hot!

Caution! Always disconnect supply circuits prior to changing any parts. 24 V supply can cause damage to the equipment if not switched off!

a) Loosen the wiring, see chapter **Wiring**.
b) Loosen the transmitter, see chapter **Change transmitter**.
c) Unscrew the bolts (10) with a cap key or a wrench.
d) Change seals (11).
e) Change sensor (12).
f) Assemble in reverse order, make sure that the seals are clean and correctly centered. Fully tighten the bolts. The process connection forms a metallic connection with the sensor, which ensures a defined compression of the seal.

2.2Tf503726.en

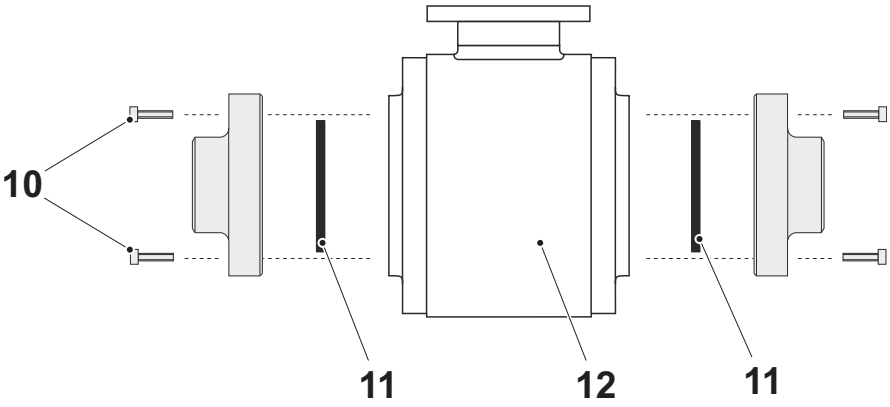

10 Bolt
11 Seal
12 Sensor

Change display

a) Remove the display cover (13) of the transmitter (2).

b) Press the side latches (14) on the display module (15) and remove it from the display cover.

c) Rotate the display module to the desired position (max. 4 x 45° in each direction), and place it back into the display cover.

d) Screw the display cover firmly onto the transmitter.

e) Assemble in reverse order.

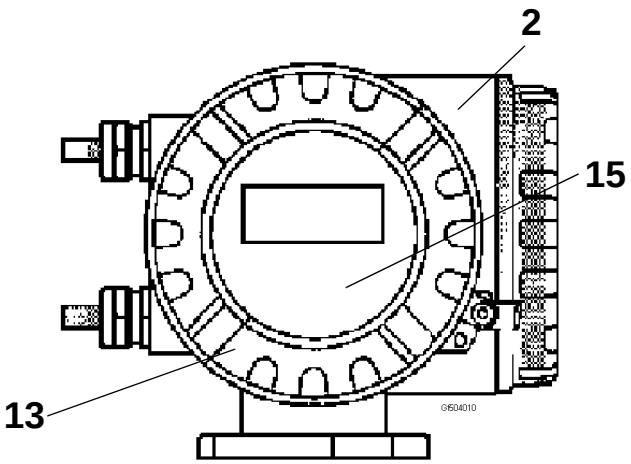

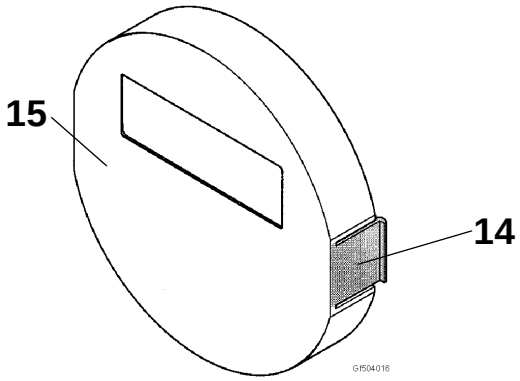

2 Transmitter
13 Display cover
14 Side latches
15 Display module

2.2Tf503726.en

Change fuse

DANGER!

Risk of electrical shock!
Always disconnect supply circuits prior to changing any parts!

The procedure for replacing the fuse is as follows:

a) Switch off power supply.
b) Unscrew the display cover (13) from transmitter (2)
c) Remove the power supply board (16).
d) Remove cap (17) and replace the device fuse (18).
e) Assemble in reverse order.

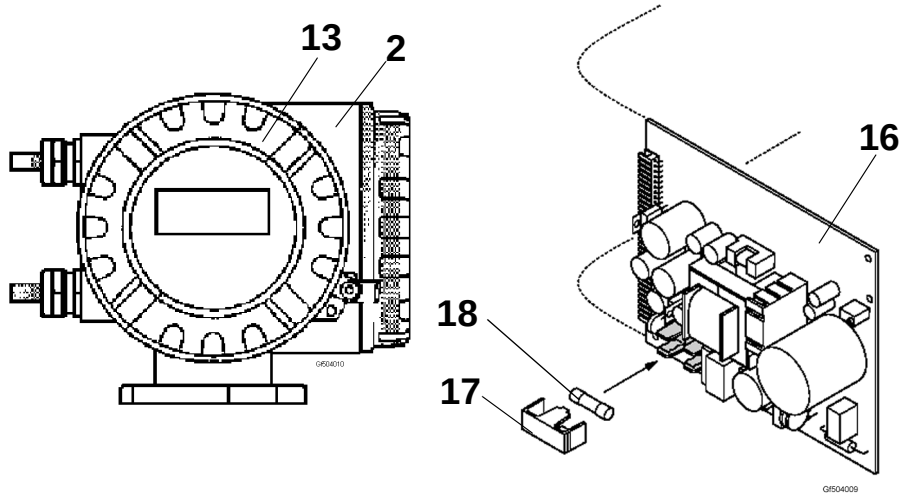

2 Transmitter
13 Display cover
16 Power supply board
17 Cap
18 Device fuse

2.2Tf503726.en

Cleaning

When cleaning the exterior of measuring devices, always use cleaning agents that do not attack the surface of the housing and the seals.

Troubleshooting

Errors which occur during commissioning or measuring operation are displayed immediately. If two or more system or process errors occur, the error with the highest priority is the one shown on the display.

Always start troubleshooting with the checklists below, if faults occur after start-up or during operation. The routine takes you directly to the cause of the problem and the appropriate remedial measures.

Display

Check	Action
No display visible and no output signals present.	- Check the power supply terminals 1, 2. - Check the power line fuse. - Measuring electronics defective.
No display visible, but output signals are present.	- Check whether the ribbon-cable connector of the display module is correctly plugged into the amplifier board. - Display module defective. - Measuring electronics defective.
Display texts are in a foreign language.	Switch off power supply. Press and hold down both the [+] [-] buttons and switch on the measuring device. The display text will appear in English (default) and is displayed at maximum contrast.
Measured value indicated, but no signal at the current or pulse output	Measuring electronics defective

2.2Tf503726.en

Error messages on display

Errors which occur during commissioning or measuring operation are displayed immediately. Error messages consist of a variety of icons. The meanings of these icons are as follows (example):

- Error type: **S** = system error, **P** = process error
- Error message type: **Flash symbol** = fault message, **!** = notice message
- **Empty pipe** = Type of error, e.g. measuring tube is only partly filled or completely empty
- **03:00:05** = duration of error occurrence (in hours, minutes and seconds)
- **# 401** = error number

The measuring system distinguishes between two types of errors:

- System errors: This group comprises all device errors, e.g. communication errors, hardware errors, etc.
- Process errors: This group comprises all application errors, e.g. empty pipe, etc.

Caution! The measuring system interprets simulations and positive zero return as system errors, but displays them as notice messages only.

Error number	Type of error
001 - 399	System error (device error) has occurred.
501 - 699	
401 - 499	Process error (application error) has occurred.

2.2Tf503726.en

Error message type

Users have the option of weighting certain errors differently, having them classed as “Fault messages” or “Notice messages”. You can define messages in this way with the aid of the function matrix, see chapter **Function matrix** in Function description.

Serious system errors, e.g. module defects, are always identified and classed as “fault messages” by the measuring device.

Notice message (!)

- Displayed as -> Exclamation mark (**!**), error type (**S**: system error, P: process error).
- The error in question has no effect on the inputs or outputs of the measuring device.

Fault message (Flash symbol)

- Displayed as -> Lightning flash (**Flash symbol**), error type (S: system error, **P**: process error).
- The error in question has a direct effect on the inputs or outputs. The response of the inputs or outputs (failsafe mode) can be defined by means of functions in the function matrix, see chapter **Function matrix** in Function description.

Note! For security reasons, error messages should be output via the relay outputs.

2.2Tf503726.en

Confirming error messages

For the sake of plant and process safety, the measuring device can be configured in such a way that fault messages (**Flash symbol**) always have to be rectified and acknowledged locally by pressing E. Only then do the error messages disappear from the display.

Note!

- Fault messages (**Flash symbol**) can also be reset and confirmed via the status input.
- Notice messages (**!**) do not require acknowledgment. Note, however, that they remain visible until the cause of the error has been rectified.

(Cont'd)

(Cont'd)

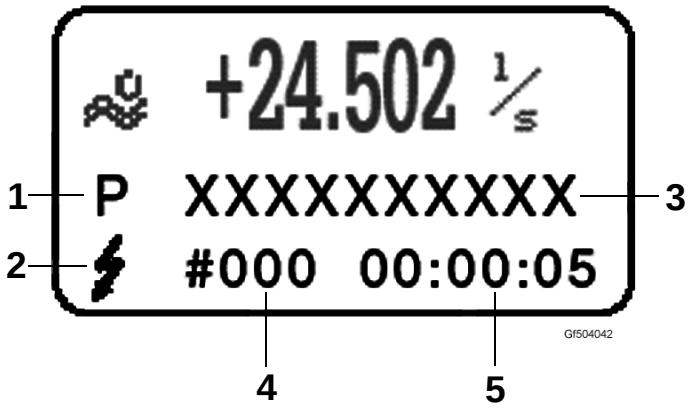

1 Error type: Type **P** = process error, **S** = system error
2 Error message type: **Flash symbol** = fault message, **!** = notice message
3 Error designation: e.g. **Empty pipe** = measuring tube is only partly filled or completely empty
4 Error number: e.g. **#401**
5 Duration of most recent error occurrence (in hours, minutes and seconds)

2.2Tf503726.en

Spare parts

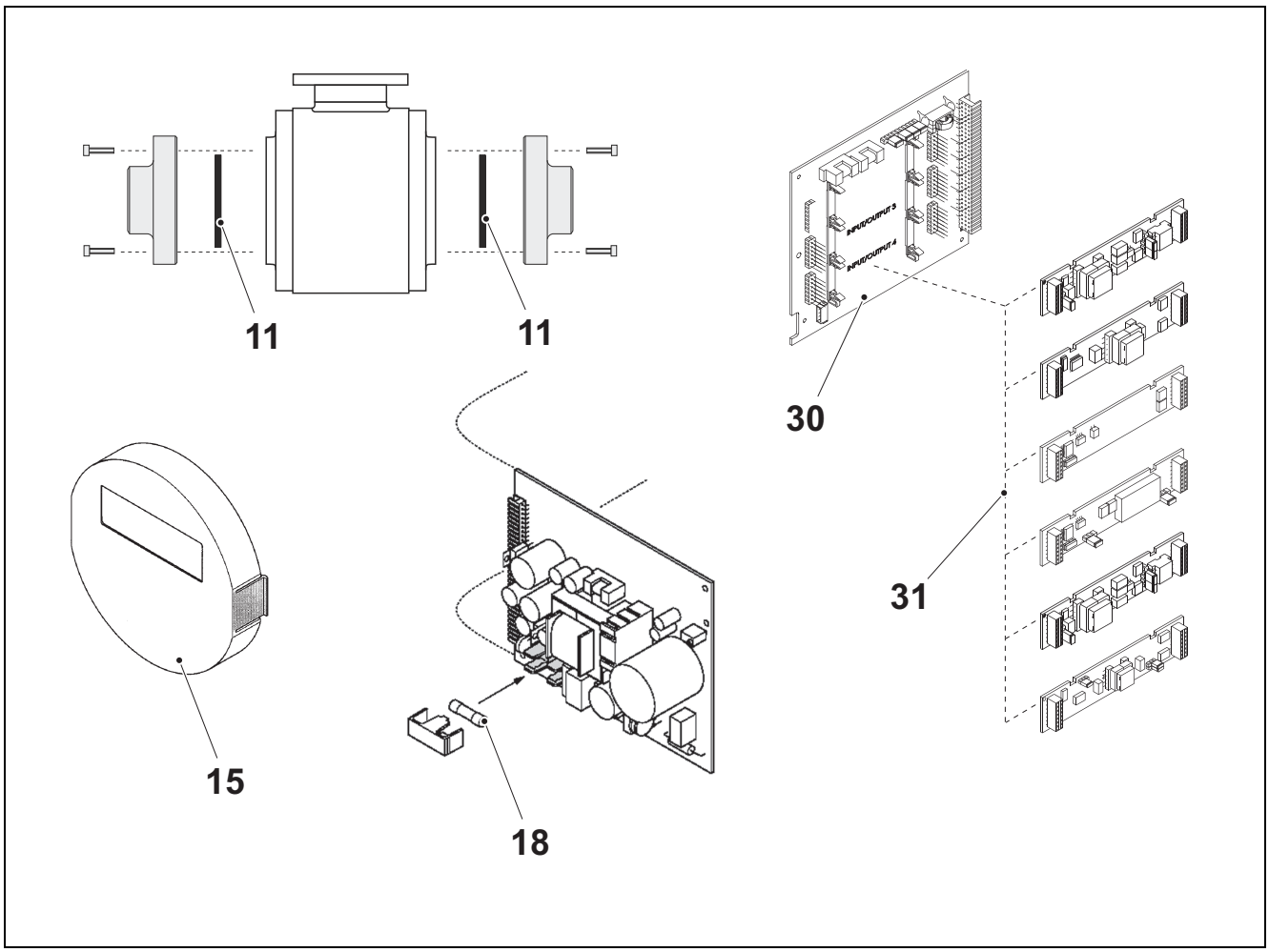

Spare part article No.	Description	Included parts	Pos.	Qty.
90503-3396	Device fuse, Promag 10	-	18	1
90503-0533	Device fuse, Promag 50/53/55	kit of 10 fuses	18	1
90522-5916	Gasket set Promag DN02 10H-55H EPDM	-	11	2
90522-5917	Gasket set Promag DN04 10H-55H EPDM	-	11	2
90522-5918	Gasket set Promag DN08 10H-55H EPDM	-	11	2
90522-5919	Gasket set Promag DN15 10H-55H EPDM	-	11	2
90522-5920	Gasket set Promag DN25 10H-55H EPDM	-	11	2
90522-5921	Gasket set Promag DN25 DIN 10H-55H EPDM	-	11	2
90522-5922	Gasket set Promag DN40 10H-55H EPDM	-	11	2
90522-5892	Gasket set Promag DN40 10H-55H EPDM, Short	-	11	2
90522-5923	Gasket set Promag DN50 10H-55H EPDM	-	11	2
90522-5924	Gasket set Promag DN65 10H-55H EPDM	-	11	2

Spare part article No.	Description	Included parts	Pos.	Qty.
90522-5925	Gasket set Promag DN80 10H-55H EPDM	-	11	2
90522-5926	Gasket set Promag DN100 10H-55H EPDM	-	11	2
90522-5927	Gasket set Promag DN125 10H-55H EPDM	-	11	2
90522-5928	Gasket set Promag DN150 10H-55H EPDM	-	11	2
90522-5929	Gasket set Promag DN02 10H-55H Silicone	-	11	2
90522-5930	Gasket set Promag DN04 10H-55H Silicone	-	11	2
90522-5931	Gasket set Promag DN08 10H-55H Silicone	-	11	2
90522-5932	Gasket set Promag DN15 10H-55H Silicone	-	11	2
90522-5933	Gasket set Promag DN25 10H-55H Silicone	-	11	2
90522-5934	Gasket set Promag DN25 DIN 10H-55H Silicone	-	11	2
90522-5935	Gasket set Promag DN40 10H-55H Silicone	-	11	2
90522-5890	Gasket set Promag DN40 10H-55H Silicone, Short	-	11	2
90522-5936	Gasket set Promag DN50 10H-55H Silicone	-	11	2
90522-5937	Gasket set Promag DN65 10H-55H Silicone	-	11	2
90522-5938	Gasket set Promag DN80 10H-55H Silicone	-	11	2
90522-5939	Gasket set Promag DN100 10H-55H Silicone	-	11	2
90522-5940	Gasket set Promag DN125 10H-55H Silicone	-	11	2
90522-5941	Gasket set Promag DN150 10H-55H Silicone	-	11	2
90503-3391	Display, Promag 50	-	15	1
6-31801-9746-2	Display, Promag 53/55	-	15	1
90503-3390	Kit power supply, Promag 50/53	-	-	1
90511-8437	Kit power supply, Promag 55	-	-	1
90503-3395	Communicationcard, Profibus PA, Promag 50/53	-	-	1
90511-8438	Communicationcard, Profibus PA, Promag 55	-	-	1
90503-3392	Communicationcard, 4-20mA+frequency output, Promag 50	-	-	1
90503-3393	Communicationcard, 4-20mA+frequency output, Promag 53/55	-	-	1
90503-3397	Measuring amplifier, Promag 50	-	-	1
90503-3398	Measuring amplifier, Promag 53	-	-	1
90511-8439	Measuring amplifier, Promag 55	-	-	1
90512-2215	Kit communicationcard Hart, Promag 53/55/8X/93/65	-	30	1
90512-2216	Communication sub card, Hart, Promag 53/55/8X/93/65	-	31	1
90512-8302	Screw service kit	M5 x 14, M5 x 28	-	2

2.2Tf503724.en

Tetra Pak

Maintenance & Spare Parts

Pressure transmitter

(Endress + Hauser)

FMD 78



1.0 1219131-0101.fro

Tetra Pak

Doc No. 1219131-0101

Pressure transmitter

FMD 78

This document refers to components specified in Technical Manual, Maintenance & Spare Parts CD/ DVD or on Tetra Pak Intranet.

1.0 1219131-0101.fro

Version 01

Doc No. 1219131-0101

Tetra Pak

Tetra Pak Processing Systems AB

Maintenance 1

Description 1

Wiring 3

Change transmitter 5

Rotating the housing 7

Calibrating 8

Spare Parts 13

1.0 1219131-0101.TOC

This page intentionally left blank

Maintenance

Description

The FMD 78 is a differential pressure transmitter. The pressure transmitter can measure liquids, gases and vapours. Furthermore, the pressure transmitter is operated by various types of electronics.

Display

A 4-line liquid crystal display (LCD) is used for display and operation. The on-site display shows measured values, dialog text as well as fault and notice messages in plain text, thereby supporting the user in every stage of operation.

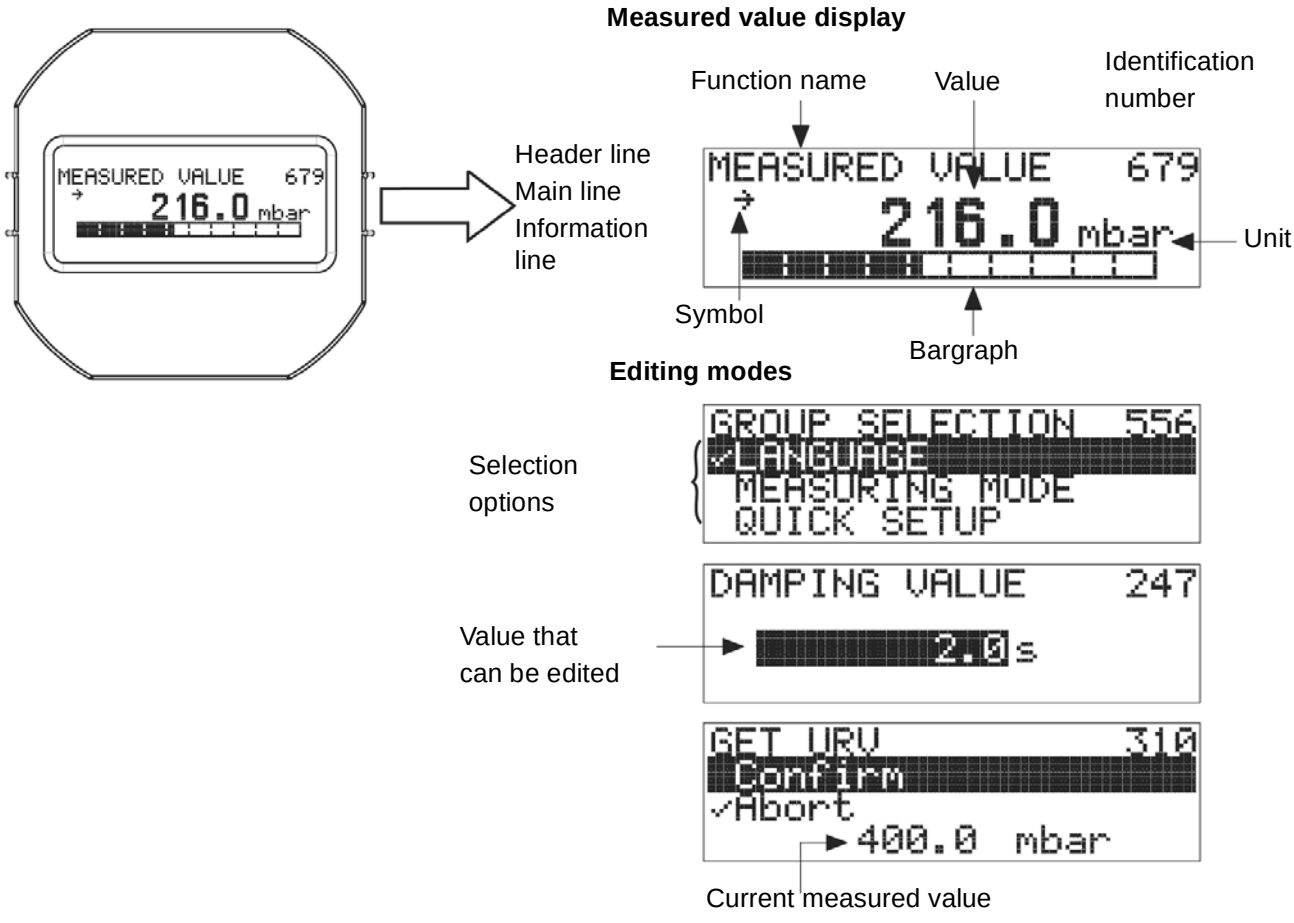

2.2Tf504052.en

(Cont'd)

(Cont'd)

Operating keys

The operating keys are located either under the protective cap on the exterior of the device or inside on the electronic insert. The operating keys located externally on the device work on the Hall sensor principle. As a result, no additional openings are required in the device.

Exterior keys

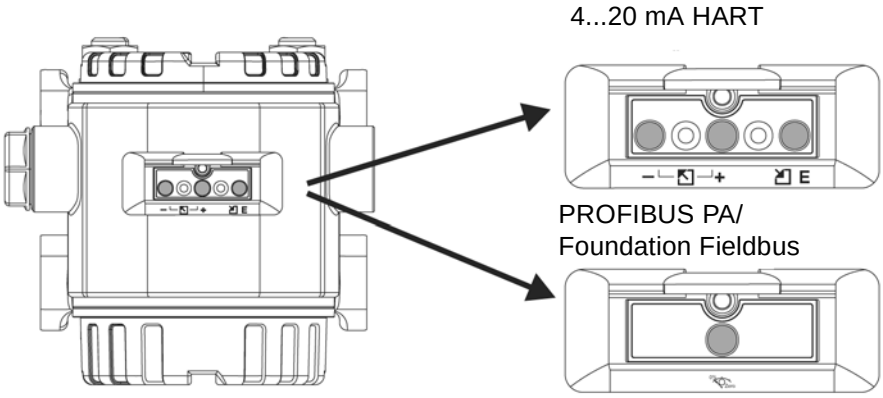

Internall keys

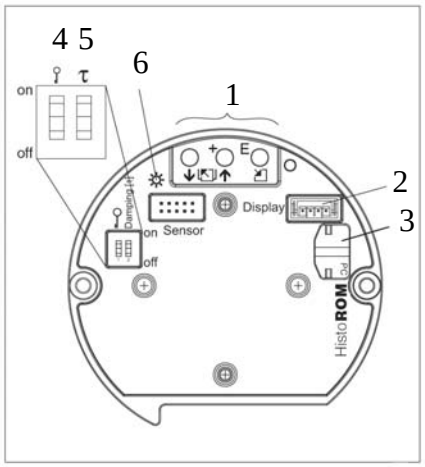

Electronic insert HART

1 Operating keys
2 Slot for optional display
3 Slot for optional HistoROM®/ M-DAT
4 DIP-switch for locking/ unlocking measuredvalue-relevant parameters
5 DIP-switch for damping on/off
6 Green LED to indicate value being accepted

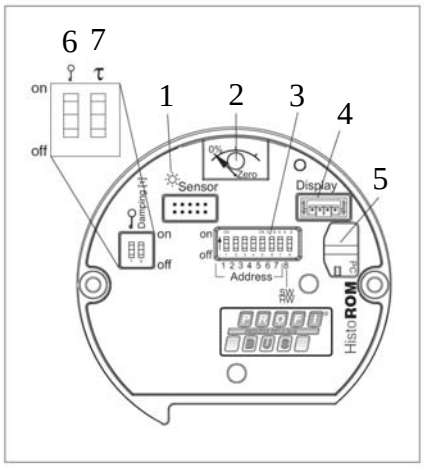

Electronic insert PROFIBUS PA

1 Green LED to indicate value being accepted
2 Key for position calibration
3 Slot for optional HistoROM®/ M-DAT
4 Slot for optional display
5 DIP-switch for hardware address
6 DIP-switch for locking/ unlocking measuredvalue-relevant parameters
7 DIP-switch for damping on/off

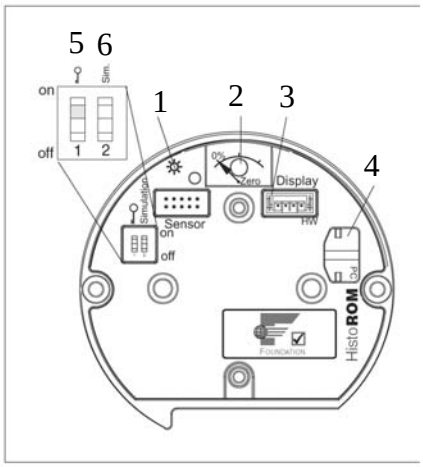

Electronic insert Foundation Fieldbus

1 Green LED to indicate value being accepted
2 Key for position calibration
3 Slot for optional display
4 Slot for optional HistoROM®/ M-DAT
5 DIP-switch for locking/ unlocking measuredvalue-relevant parameters
6 DIP-switch for simulation mode

2.2Tf504052.en

Wiring

WARNING!

Risk of injury!
Shut off the power supply before changing the transmitter!

a) The supply voltage must match the supply voltage on the nameplate.
b) Switch off the supply voltage before connecting the device.
c) Remove housing cover of the terminal compartment.
d) Guide cable through the gland.
e) Connect device.
f) Screw down housing cover.
g) Switch on supply voltage

.

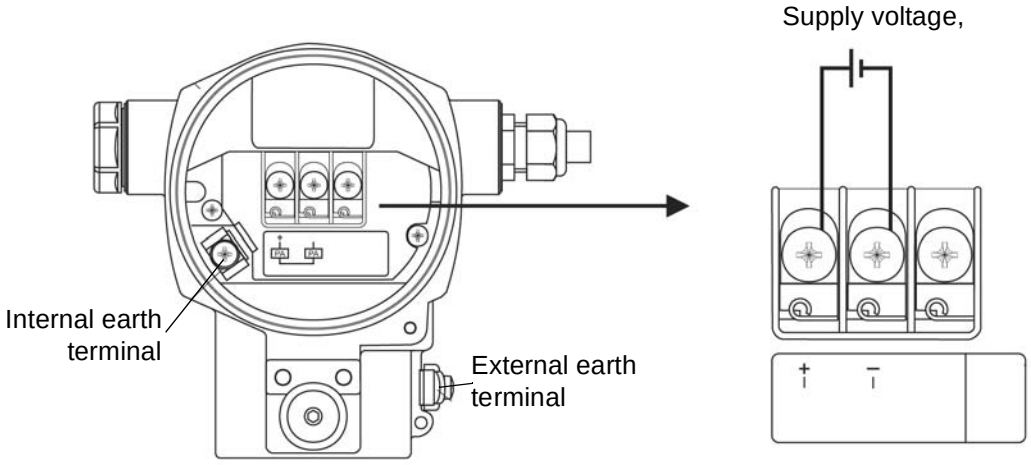

2.2Tf504052.en

(Cont'd)

(Cont'd)

.

Connecting devices with Harting plug Han7D

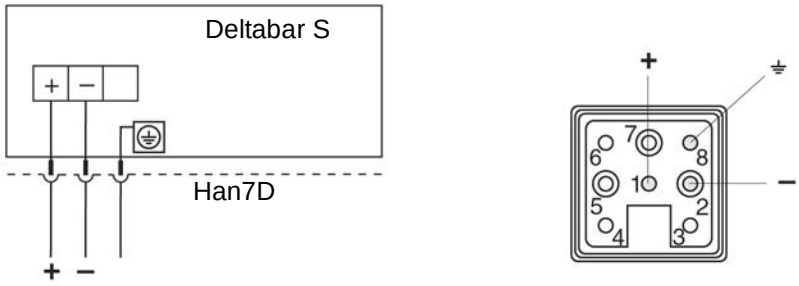

Connection devices with M12 plug

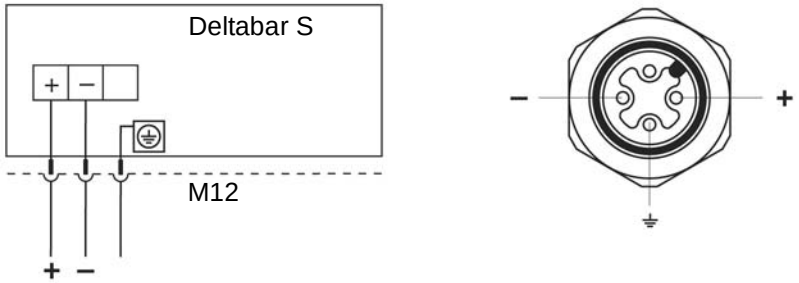

Connection devices with 7/8" plug

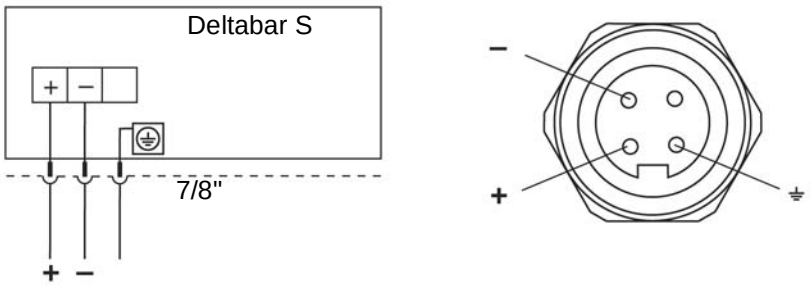

2.2Tf5040052.en

Change transmitter

WARNING! **Risk of injury!**
Make sure that the pipelines are drained and free from media before changing the transmitter!
Never change the transmitter when it is hot!

WARNING! **Risk of injury!**
Shut off the power supply before changing the transmitter!

a) Unscrew the cover (1) from the housing.
b) Remove the display and the electronic insert to access the terminal chamber.
c) Disconnect the transmitter wires (2) from the terminal (3), mark the wires.

Note! Make sure to isolate the cable wires to avoid short circuit.

d) Pull out the transmitter cable through the cable bushing (4).
e) Remove the transmitter (5) at the process connection (6).
f) Change the transmitter.
g) Reassemble in reverse order.

(Cont'd)

2.2Tf504052.en

(Cont'd)

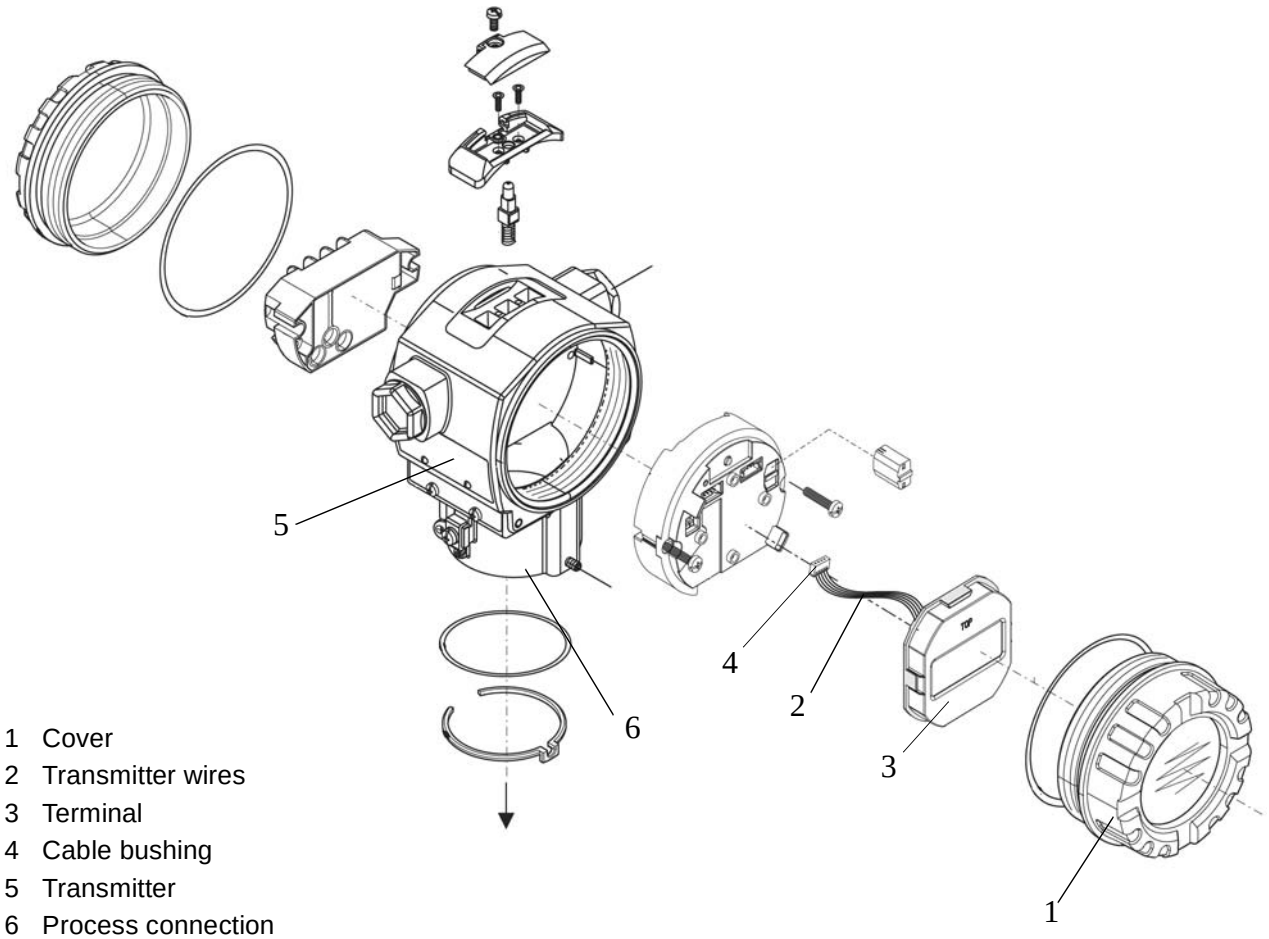

1 Cover
2 Transmitter wires
3 Terminal
4 Cable bushing
5 Transmitter
6 Process connection

2.2Tf5040052.en

Rotating the housing

The housing can be rotated up to 360° by loosening the Allen screw.

a) Loosen setscrew with a 2 mm Allen key.
b) Rotate housing (max. up to 360°).
c) Retighten setscrew.

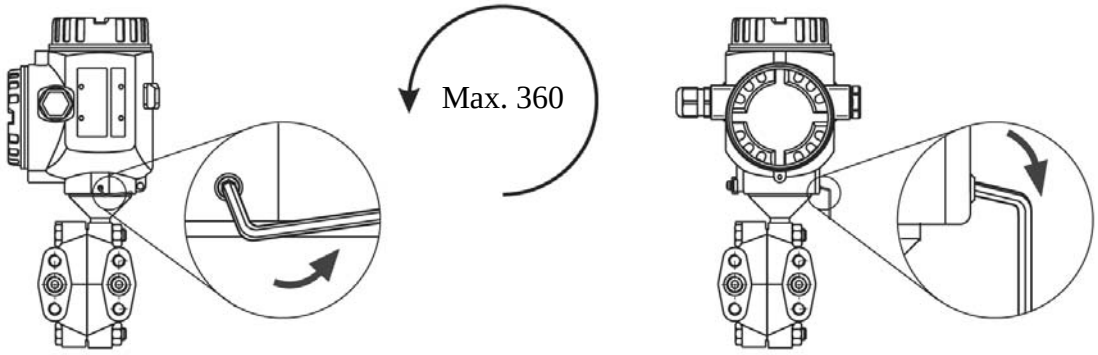

2.2Tf504052.en

Calibrating

Analogue electronics

a) Prepare for calibration as follows:
   - Connect up electrically the pressure transmitter.
   - Connect a multimeter (4-20 mA) to the connection terminals provided.
   - Ensure that a pressure can be generated within the required measuring range.

b) Set the damping on the DIP switches as follows:

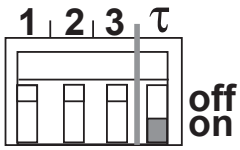

off = damping 0 sec
on = damping 2 sec

c) Zero point calibration is carried out using the potentiometer for zero point adjustment. Carry out the zero point adjustment as follows:
   - Enter exactly 0 bar for the zero point (ambient pressure for gauge measurements or vacuum for absolute measurements).
   - Adjust the multimeter to exactly 4 mA.

d) Three DIP switches are available for course adjustment of the measuring span. Depending on the switch position, a measuring range spread (also known as turndown or TD) can be selected for 1:1 (to 2:1), 3:1, 6:1 or 10:1. Fine adjustment is carried out using the fine adjustment potentiometer of the measuring span. Carry out the measuring span adjustment as follows:
   - Enter exactly the pressure required for the measuring span.
   - Adjust the multimeter to exactly 20 mA. Proceed as follows:
     Limit the measuring span by selecting one of the measurement range spreads using the DIP switches for coarse adjustment.
     Adjust exactly the measuring span required using the potentiometer for fine adjustment of the measuring span.

(Cont'd)

2.2Tf504052.en

(Cont'd)

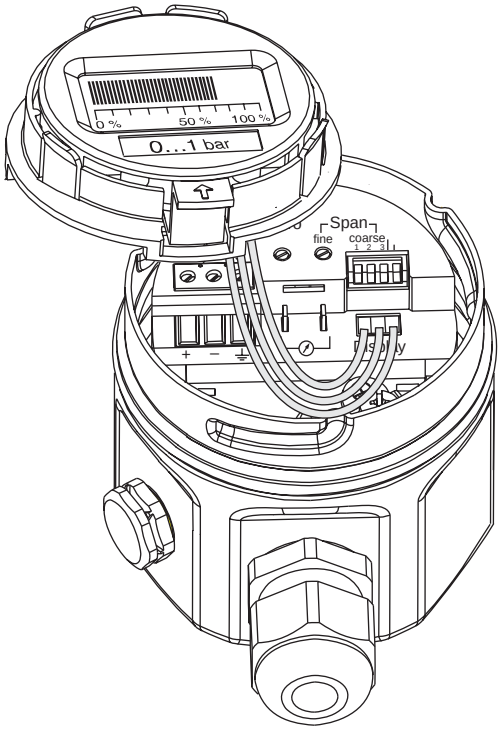

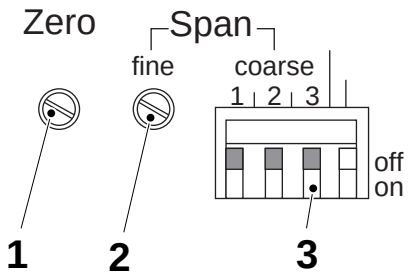

TD 1:1

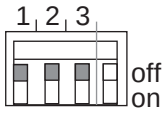

TD 3:1

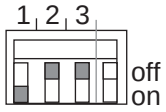

TD 6:1



TD 10:1

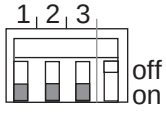

(Cont'd)

2.2Tf504052.en

(Cont'd)

HART electronics

a) Prepare for calibration as follows:
   - Connect the pressure transmitter electrically.
   - Connect a multimeter (4-20 mA) to the connection terminals provided (if the digital display is not connected).
   - Ensure that a pressure can be generated within the required measuring range.

b) Set the damping via the switch (1) on the electronic insert.

off = damping 0 sec
on = damping 2 sec

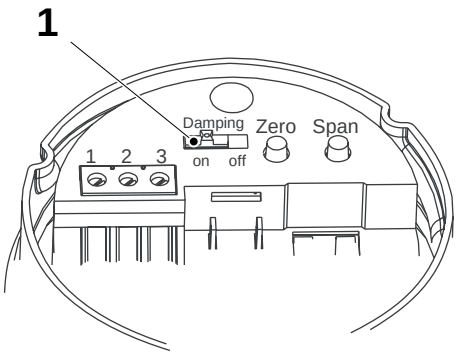

1 Damping switch

c) Use the “Zero” key (2) to call up the lower range value currently saved or to calibrate the lower range value.
   - Press the “Zero” key to call up the lower range value.
   - Calibrate the lower range value:
     1. Specify the exact pressure for the lower range value (zero point).
     2. Press the “Zero” key.
     3. Release the key and press the key a second time within approx. 2 s. Hold down the key for 3 to 4 seconds.

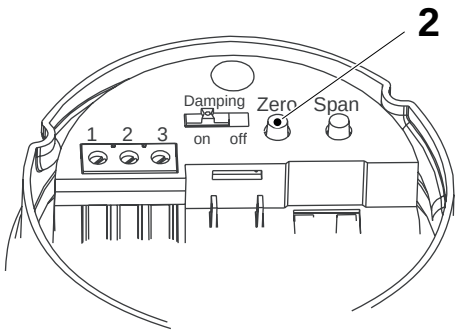

2 Zero key

2.2Tf5040052.en

(Cont'd)

(Cont'd)

d) Use the “Span” key (3) calibrate the upper range value.
   - Specify the exact pressure for the upper range value.
   - Press the “Span” key.
   - Release the key and press the key a second time within approx. 2 s. Hold down the key for 3 to 4 seconds.The available pressure is now adopted as the new upper range value.

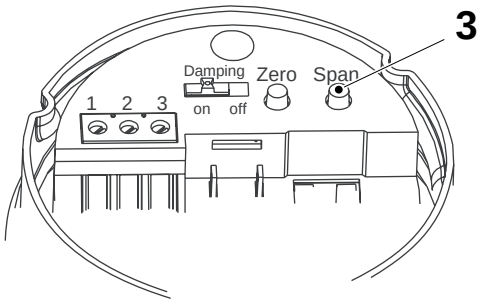

3 Span key

The Zero and Span keys can also be used to reset to the factory setting:

- Press the Zero and Span keys simultaneously.
- Release the keys, press them a second time within 2 seconds and hold them for at least 7 seconds.

(Cont'd)

2.2Tf504052.en

(Cont'd)

PROFIBUS electronics

a) Prepare for calibration as follows:
   - Connect the pressure transmitter electrically.
   - Ensure that a pressure can be generated within the required measuring range.

Note! Use the “Zero” and “Span” keys to set the lower range value and upper range value of the bar graph of the display module. These settings do not have any effect on the digital output value or on the measured value.

b) Proceed as follows when calibrating the lower range value:
   - Specify exactly the pressure for the lower range value.
   - Press the Zero key twice.
     The acting pressure is adopted as the lower range value.
     By pressing the Zero key once the value saved as the lower range value can be output on the digital display.

c) Proceed as follows when calibrating the upper range value:
   - Specify exactly the pressure for the upper range value.
   - Press the Span key twice.
     The acting pressure is adopted as the upper range value.
     By pressing the Span key once, the value saved as the upper range value can be output on the digital display.

2.2Tf5040052.en

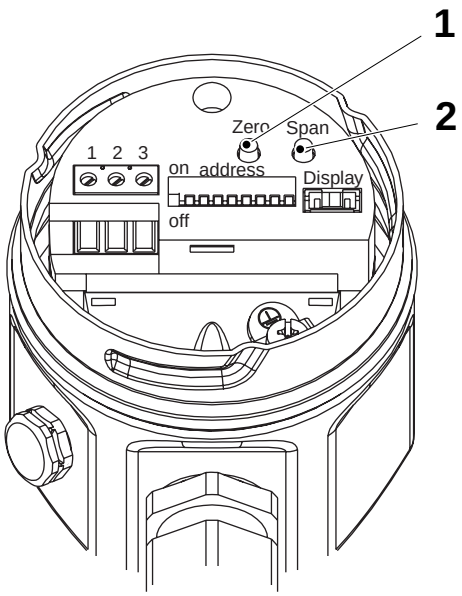

1 Zero key
2 Span key

Spare Parts

Spare parts Article No.	Description	Pos.	Qty
90503-4806	O-ring for FMD 45.69x2.62mm	-	1
90503-4807	Push button for Deltabar S FMD HART/4-20mA	-	1
90503-4814	Push button for Deltabar S FMD Profibus PA	-	1
90503-4808	Sealing for cover	-	1
90503-4809	Electronic insert 4-20mA/HART, Push button on electronics	-	1
90503-4810	Electronic insert 4-20mA/HART, Push button on housing	-	1
90503-4812	Electronic insert Profibus PA, Push button on electronics	-	1
90503-4813	Electronic insert Profibus PA, Push button on housing	-	1
90503-4811	Display module VU 333 with holder	-	1

2.2TF504326.en

Tetra Pak

Maintenance & Spare Parts

Level sensor

(Kübler)

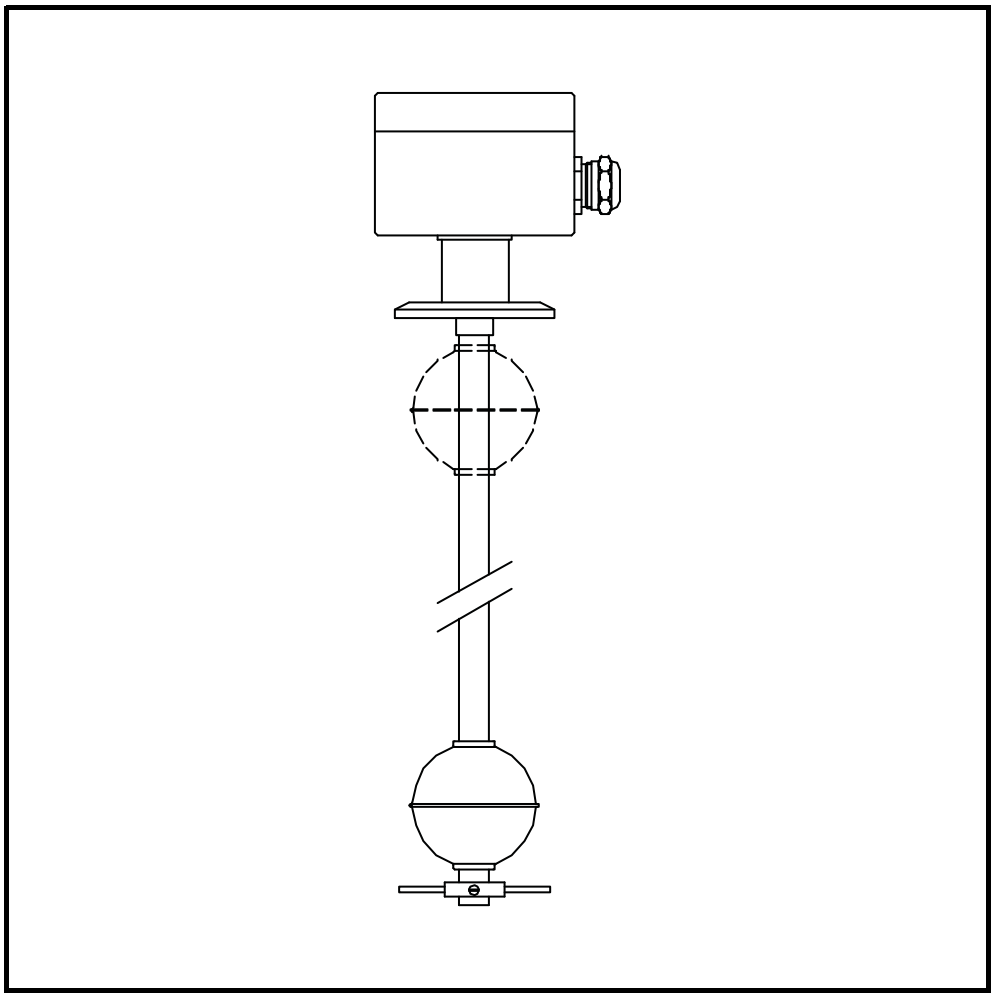

1.0 1224261-0101.fro

Tetra Pak

Doc No. 1224261-0101

Level sensor

Article No.	Connection	Tube length	Reslu-tion	Float	Float stop	Control unit
90511-2809	Tri-clamp flange 2,5”	850 mm	10 mm	SV52V	SR61	TP43A
90511-3547	Tri-clamp flange 2,5”	1200 mm	10 mm	SV52V	SR61	TP43A
90511-4801	Tri-clamp flange 2,5”	1230 mm	10 mm	SV52V	SR58	TP43A
90511-6654	Tri-clamp flange 2,5”	800 mm	10 mm	SV52V	SR61	TP43A
90516-5509	Tri-clamp flange 2,5”	850 mm	5 mm	SV52V	SR61	TP43A

1.0 1224261-0101.fro

Version 04 Issue 2013-02

Doc No. 1224261-0101

Tetra Pak

Tetra Pak Processing Systems AB

Table of contents

Maintenance 1

Function Description 1

Change 2

Functional Test 3

Spare parts 4

1.0 1224261-0101.TOC

This page intentionally left blank

Maintenance

Function Description

Level sensors are used as measuring sensors for the electrical continuous remote display of levels. Level Sensors work on float principle with magnetic transmission.The magnetic field, which is in the ball or cylindrical floats actuates very small reed contacts through the wall of a guide tube and these pick up an uninterrupted measuring-circuit voltage from a resistance chain.

2.2tf506466.en

Change

a) If the diameter of the float (3) is larger than the inside diameter of the unit (1), the float must be removed before the unit is disassembled. The adjusting rings (4) must be refitted in the same position as it was before the dismantling.

b) Remove sealring (2).

c) Assemble in reverse order.

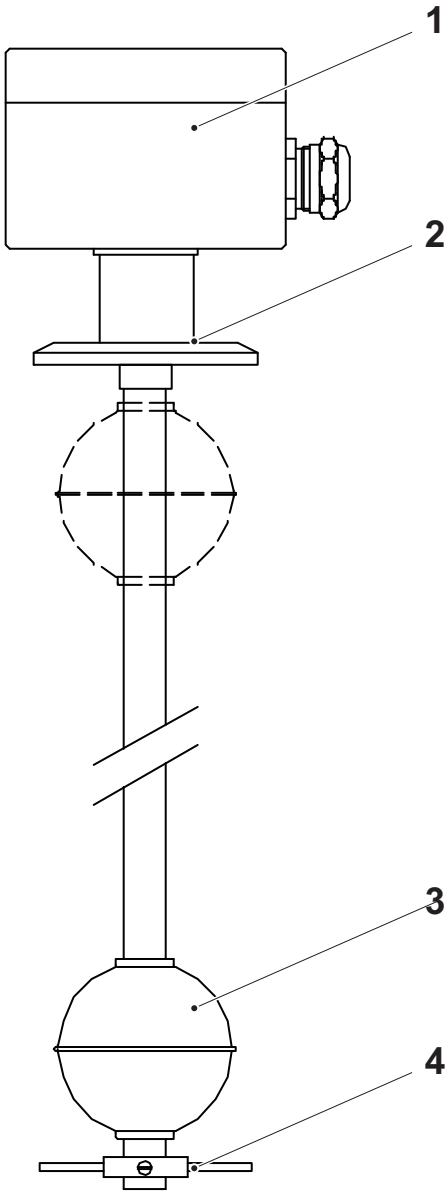

1 Control unit
2 Sealring
3 Float
4 Adjusting rings

2.2tf506466.en

Functional Test

Note! The user is responsible for periodically carrying out a functional test.

Note! Do not operate level sensors in close proximity to powerful electromagnetic fields. (Minimum clearance: 1 meter).

A functional test can be performed on the measuring chain with the sensor either removed or in situ. If the units are in situ, it must be possible to fill the system.

a) Remove connection cable.

b) Connect ohmmeter to two wires.

c) Move float manually or by filling the system from the min. to max. points.

d) The resistance reading displayed changes continouosly as a function of the wire coulours connected.

Black-Brown	Blue-Brown	Black-Blue
Resistance increases in proportion to the height of the float.	Resistance falls from the value of the overall resist-ance in inverse proportion to the height of the float.	Display of overall resistance.

2.2tf506466.en

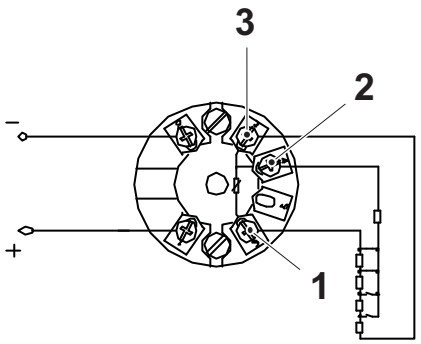

1 Blue
2 Brown
3 Black

Spare parts

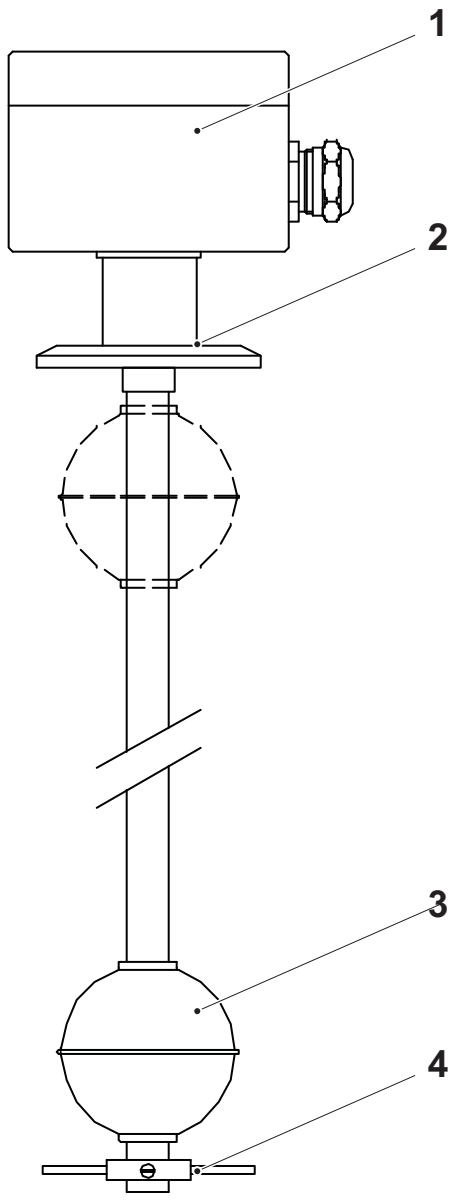

2.2tf506467.en

Component article No.	Spare parts Article No.	Description	Pos.	Qty
90511-2809 90511-3547 90511-4801 90511-6654 90516-5509	90511-5005	Control unit	1	1
	6-9611991361	Seal ring	2	1
	90511-5007	Float	3	1
90511-2809 90511-3547 90511-6654 90516-5509	90511-5008	Adjustment rings	4	1
90511-4801	90511-5781	Adjustment rings	4	1

This page intentionally left blank

2.2tf506467.en

Tetra Pak

Maintenance & Spare Parts

Pressure transmitter

(Endress+Hauser)

PMC51, PMP51, PMP55



1.0 1229086-0101.fro

Tetra Pak

Doc No. 1229086-0101

Pressure transmitter

PMC51, PMP51, PMP55

This document refers to components specified in Technical Manual, Maintenance & Spare Parts CD/ DVD or on Tetra Pak Intranet.

1.0 1229086-0101.fro

Version 01 Issue 2012-10

Doc No. 1229086-0101

Tetra Pak

Tetra Pak Processing Systems AB

Table of contents

Function Description 1

Housing 2

Maintenance 3

Changing Transmitter 4

Disassemble display (optional) 5

Human interface 6

Electronic insert. 7

Position zero adjustment 8

Cleaning of filter 9

Exterior cleaning 9

Troubleshooting. 10

Spare Parts 13

Not applicable for this component! 13

1.0 1229086-0101.TOC

This page intentionally left blank

Function Description

PMC51

The ceramic sensor is a dry sensor, i.e. the process pressure acts directly on the robust ceramic process isolating diaphragm and deflects it. A pressure-dependent change in capacitance is measured at the electrodes of the ceramic substrate and the process isolating diaphragm.

PMP51

The operating pressure deflects the process isolating diaphragm and a fill fluid transfers the pressure to a resistance bridge. The pressure-dependent change in the bridge output voltage is measured and evaluated.

PMP55

The operating pressure acts on the process isolating diaphragm of the diaphragm seal and is transferred to the process isolating diaphragm of the sensor by a diaphragm seal fill fluid. The process isolating diaphragm is deflected and a fill fluid transfers the pressure to a resistance bridge.

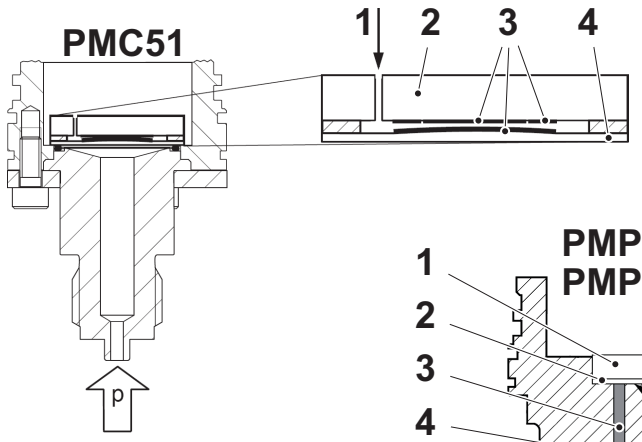

1 Air pressure
2 Ceramic substrate
3 Electrodes
4 Ceramic process isolating diaphragm

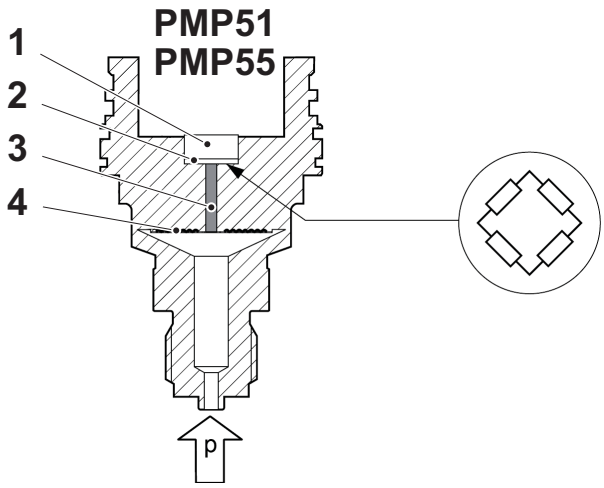

1 Silicon measuring element, substrate
2 Wheatstone bridge
3 Channel with fill fluid
4 Metal process isolating diaphragm

2.2tf508214.en

Housing

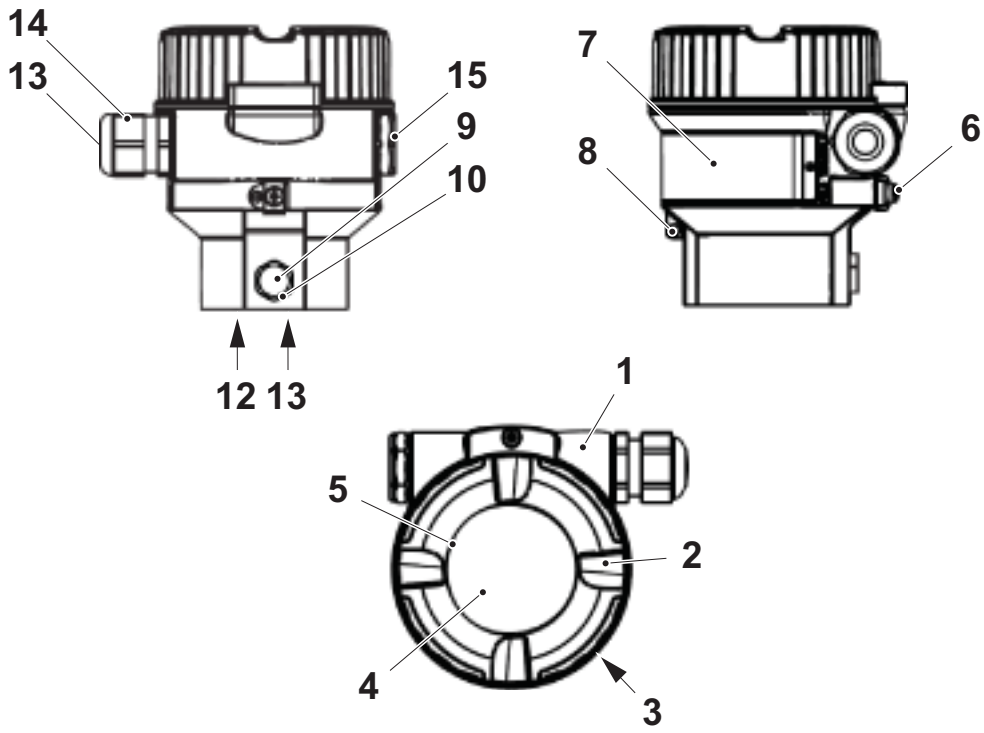

2.2tf508214.en

1 Housing
2 Cover
3 Cover seal
4 Sight glass
5 Seal
6 Ground terminal
7 Nameplates
8 Attachment for tie-on label
9 Pressure compensation filter
10 O-ring
11 Sealing ring
12 Snap ring
13 Seal of cable gland and blind plug
14 Cable gland
15 Blind plug
16 Cover clamp

Maintenance

WARNING! **Risk of injury!**
Never change the transmitter when it is hot!
Shut off the power supply before changing the transmitter!

Note! Cerabar M devices with diaphragm seals are screwed in, flanged or lamped, depending on the type of diaphragm seal.

- A diaphragm seal and the pressure transmitter together form a closed, oil-filled calibrated system. The fill fluid hole is sealed and may not be opened.
- Do not clean or touch the process isolating diaphragm of the diaphragm seal with hard or pointed objects.
- Do not remove process isolating diaphragm protection until shortly before installation.
- When using a mounting bracket, sufficient strain relief must be ensured for the capillaries in order to prevent the capillary bending down (bending radius ≥ 100 mm (3.94 in)).
- Please note that the hydrostatic pressure of the liquid columns in the capillaries can cause zero point shift. The zero point shift can be corrected.

2.2tf508214.en

Changing Transmitter

a) Check that the supply voltage corresponds to the supply voltage indicated on the nameplate.

b) Ensure the supply voltage is turned off.

c) Remove housing cover.

d) Carefully note how the wires are connected.

e) Release the cable gland and disconnect the wires.

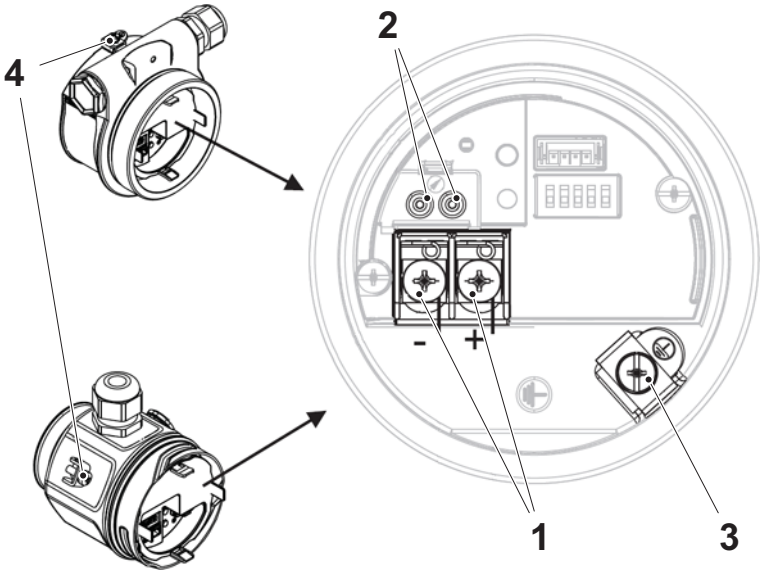

2.2tf508214.en

1 Terminals for supply and signal
2 Test terminals
3 Ground terminal
4 External ground terminal

f) Assemble in reverse order.

g) Perform a Position zero adjustment. See page 8

Disassemble display (optional)

If applicable, remove the display by following steps 1 to 3.

Rotate the display

Rotate the display by following steps 4 to 6.

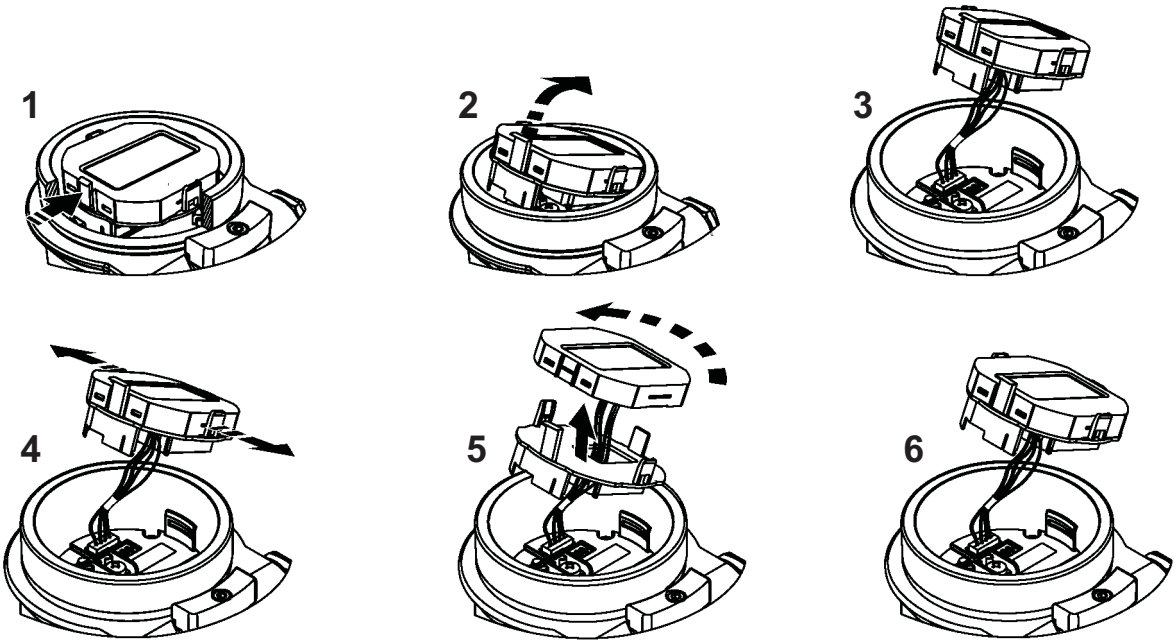

2.2tf508214.en

Human interface

Local display

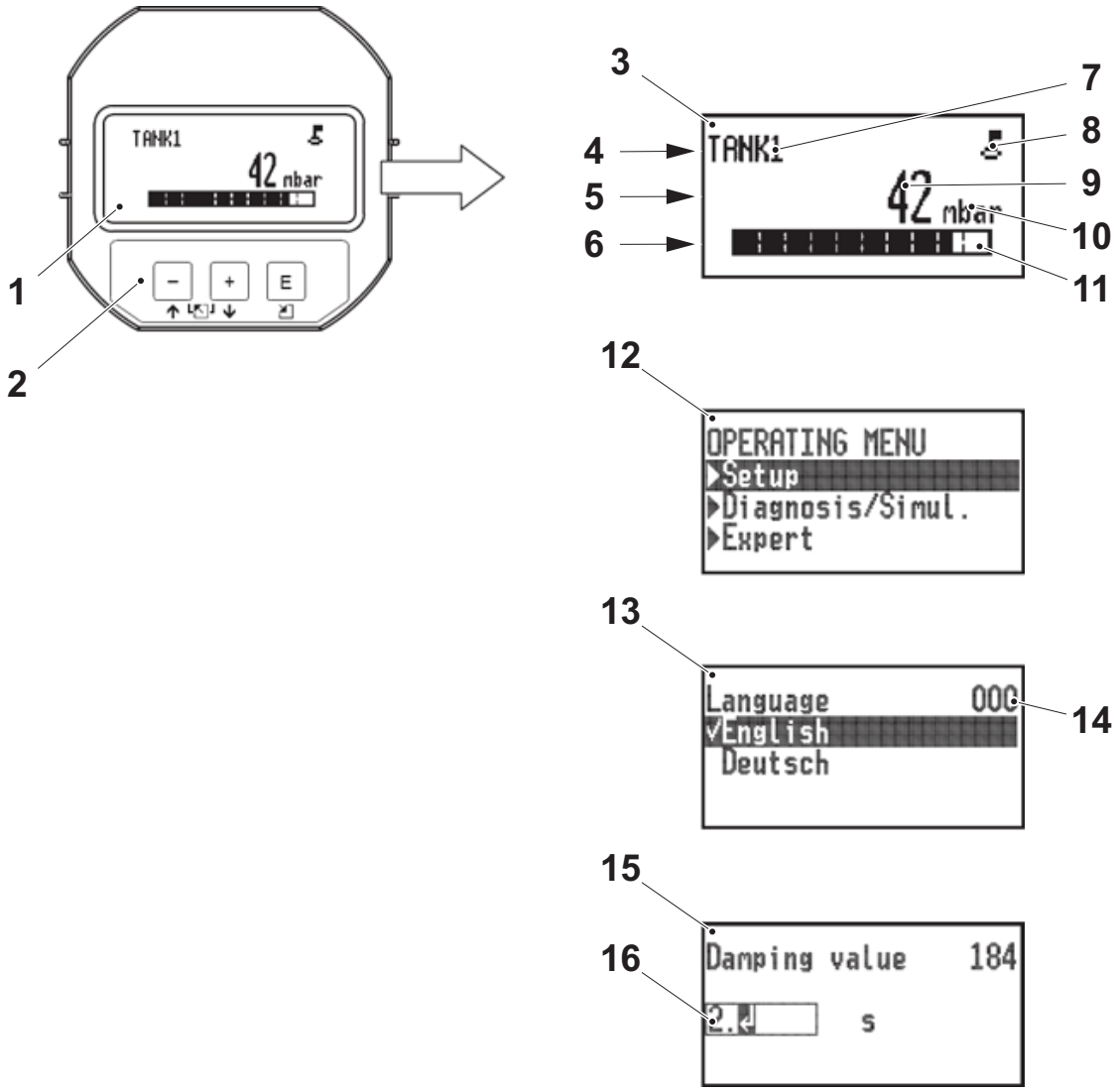

2.2tf508214.en

1 Display
2 Operating keys
3 Measured value display
4 Header line
5 Main line
6 Information line
7 Device tag
8 Symbol
9 Value
10 Unit
11 Bar graph
12 Operating menu
13 Parameter with selection list
14 Direct access code
15 Freely editable parameter
16 Editable value

Electronic insert

Analog electronic insert

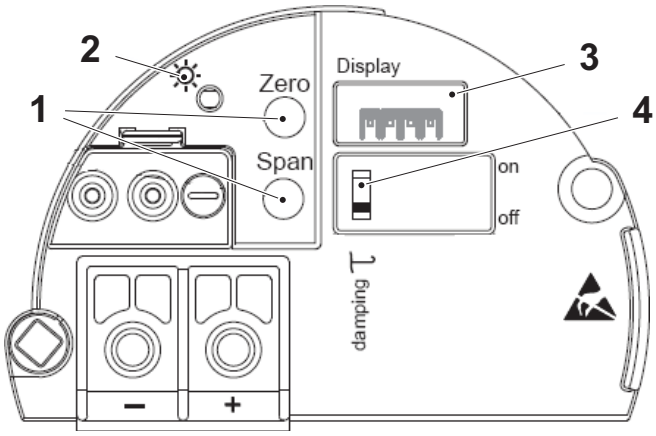

1 Zero and Span adjustment
2 Green LED (when successful operation)
3 Display slot
4 Damping on/off

PROFIBUS PA electronic insert

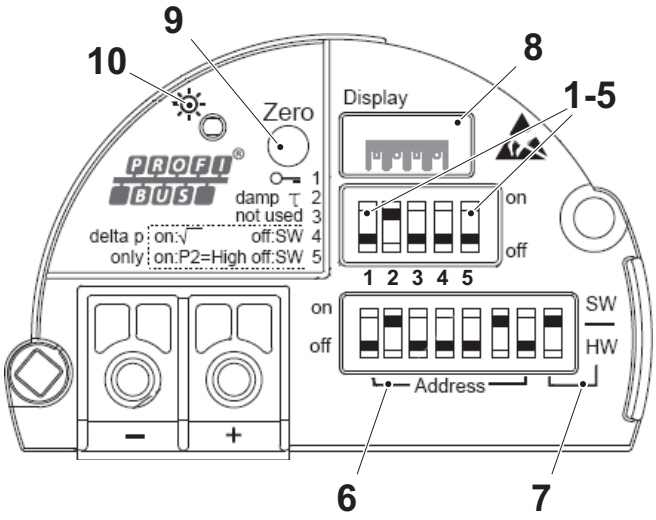

1 Lock on/off
2 Damping on/off
3 Not used
4 Not used
5 Not used
6 Hardware address
7 SW or HW
8 Display slot
9 Zero adjustment or reset
10 Green LED (when successful operation)

2.2tf508214.en

Position zero adjustment

The pressure resulting from the orientation of the device can be corrected here.

Parameter name	Description
Corrected press. (172) Display Menu path: Setup → Corrected press.	Displays the measured pressure after sensor trim and position adjustment. **Note!** If this value is not equal to "0", it can be corrected to "0" by the position adjustment.
Pos. zero adjust (007) (Deltabar M and gauge pressure sensor) Selection Menu path: Setup → Pos. zero adjust	Position zero adjustment – the pressure difference between zero (set point) and the measured pressure need not be known. **Example** – Measured value = 2.2 mbar (0.033 psi) – You correct the measured value via the "Pos. zero adjust" parameter with the "Confirm" option. This means that you assign the value 0.0 to the pressure present. – Measured value (after pos. zero adjust) = 0.0 mbar – The current value is also corrected. **Options** • Confirm • Abort **Factory setting** Abort
Calib. offset (192) / (008) (absolute pressure sensor) Entry	Position adjustment – the pressure difference between set point and the measured pressure must be known. **Example** – Measured value = 982.2 mbar (14.73 psi) – You correct the measured value with the value entered (e.g. 2.2 mbar (0.033 psi)) via the "Calib. offset" parameter. This means that you are assigning the value 980.0 (14.7psi) to the pressure present. – Measured value (after calib. offset) = 980.0 mbar (14.7 psi) – The current value is also corrected. **Factory setting** 0.0

2.2tf508214.en

Cleaning of filter

If applicable, keep the pressure compensation and GORE-TEX® filter (1) free from contamination.

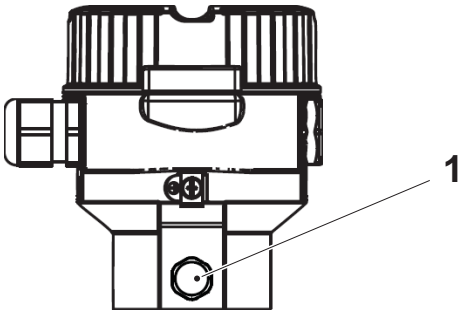

Exterior cleaning

Please note the following points when cleaning the device:

- The cleaning agents used should not corrode the surface and the seals.
- Mechanical damage to the process isolating diaphragm, e.g. due to pointed objects, must be avoided.
- Observe the degree of protection of the device. See the nameplate if necessary

2.2tf508214.en

Troubleshooting

The following table lists the messages that can occur. The Diagnostic code parameter shows the message with the highest priority. The device has four different status information codes according to NAMUR NE107:

- F = failure
- M (warning) = maintenance required
- C (warning) = function check
- S (warning) = out of specification (deviations from the permitted ambient or process conditions determined by the device with the self-monitoring function, or errors in the device itself indicate that the measuring uncertainty is greater than what would be expected under normal operating conditions).

Diagnostic code	Error message	Cause	Measure
0	No error	–	–
C412	Backup in prog.	Downloading.	1. Wait for download to complete
C482	Current simul.	Current output simulation is switched on, i.e. the device is not measuring at present.	1. End the simulation
C484	Error simul.	Fault state simulation is switched on, i.e. the device is not measuring at present.	1. End the simulation
C485	Measure simul.	Simulation is switched on, i.e. the device is not measuring at present.	1. End the simulation
C824	Process pressure	– Electromagnetic effects are greater than specifications in the technical data. – Overpressure or low pressure present. This message normally only appears briefly.	1. Check the pressure value 2. Restart the device3. Perform a reset
F002	Sens. unknown	Sensor does not suit the device (electronic sensor nameplate).	1. Contact Endress+Hauser Service
F062	Sensor conn.	– Cable connection between sensor and main electronics disconnected. – Sensor defective. – Electromagnetic effects are greater than specifications in the technical data. This message normally only appears briefly.	1. Check sensor cable 2. Replace electr. 3. Contact Endress+Hauser Service
F081	Initialization	– Cable connection between sensor and main electronics disconnected. – Sensor defective. – Electromagnetic effects are greater than specifications in the technical data. This message normally only appears briefly.	1. Perform a reset 2. Check sensor cable 3. Contact Endress+Hauser Service

2.2tf508214.en

F083	Permanent mem.	– Sensor defective. – Electromagnetic effects are greater than specifications in the technical data. This message normally only appears briefly.	1. Restart the device 2. Contact Endress+Hauser Service
F140	Working range P	– Overpressure and low pressure present. – Electromagnetic effects are greater than specified in the technical data. – Sensor defective.	1. Check the process pressure 2. Check the sensor range
F261	Electronics	– Main electronics defective. – Fault in the main electronics.	1. Restart the device 2. Replace electr.
F282	Data memory	– Fault in the main electronics. – Main electronics defective.	1. Restart the device 2. Replace electr.
F283	Permanent mem.	– Main electronics defective. – Electromagnetic effects are greater than specifications in the technical data. – The supply voltage is disconnected when writing. – An error occurred when writing.	1. Perform a reset 2. Replace electr.
F411	Up-/download	– The file is defective. – During the download, the data are not correctly transmitted to the processor, e.g. because of open cable connections, voltage peaks (ripple) on the supply voltage or electromagnetic effects.	1. Download again 2. Use another file 3. Perform a reset
F510	Linearization	– The linearization table is being edited.	1. Conclude entries 2. Select "linear"
F511	Linearization	– The linearization table consists of less than 2 points.	1. Table too small 2. Corr. table 3. Accept the table
F512	Linearization	– The linearization table is not monotonic increasing or decreasing.	1. Tab. not monotonic 2. Corr. table 3. Accept the table
F841	Sensor range	– Overpressure or low pressure present.– Sensor defective.	1. Check the pressure value 2. Contact Endress+Hauser Service
F882	Input signal	– External measured value is not received or displays a failure status.	1. Check the bus 2. Check source device 3. Check setting
M002	Sens. unknown	– Sensor does not suit the device (electronic sensor nameplate). Device continues measuring.	1. Contact Endress+Hauser Service
M283	Permanent mem.	– Cause as indicated for F283. – Correct measurement can continue as long as you do not need the peakhold indicator function.	1. Perform a reset2. Replace electr.
M431	Adjustment	– The pressure applied is outside the set measuring range (but within the sensor range). – The calibration carried out would result in the sensor nominal operating range being undershot or overshot.	1. Check the measuring range 2. Check position adjustment 3. Check the setting

2.2tf508214.en

M434	Scaling	– Values for calibration (e.g. lower range value and upper range value) are too close together. – Lower range value and/or upper range value undershoot or overshoot the sensor range limits. – The sensor was replaced and the customer-specific configuration does not suit the sensor. – Unsuitable download carried out.	1. Check the measuring range 2. Check the setting 3. Contact Endress+Hauser Service
M438	Data record	– The supply voltage is disconnected when writing. – An error occurred when writing.	1. Check setting 2. Restart the device 3. Replace electr.
M515	Configuration Flow	– Max. flow out of nominal range of sensor	1. Recalibrate the device 2. Restart the device
M882	Input signal	External measured value displays a warning status.	1. Check the bus 2. Check source device 3. Check setting
S110	Working range T	– Electromagnetic effects are greater than specifications in the technical data. – Sensor defective. – Overtemperature and low temperature present.	1. Check proc. temp. 2. Check temperature range
S140	Working range P	– Electromagnetic effects are greater than specifications in the technical data. – Sensor defective. – Overpressure and low pressure present.	1. Check proc. pressure 2. Check sensor range
S822	Process temp.	– The temperature measured in the sensor is greater than the upper nominal temperature of the sensor. – The temperature measured in the sensor is lower than the lower nominal temperature of the sensor. – Loose connection at the sensor cable.	1. Check the temperature 2. Check the setting
S841	Sensor range	– Overpressure or low pressure present. – Sensor defective.	1. Check the pressure value 2. Contact Endress+Hauser Service
S971	Adjustment	– The current is outside the permitted range 3.8 to 20.5 mA. – The pressure applied is outside the set measuring range (but within the sensor range). – The calibration carried out would result in the sensor nominal operating range being undershot or overshot.	1. Check the pressure value 2. Check the measuring range 3. Check the setting

2.2tf508214.en

Spare Parts

Not applicable for this component!

2.2tf508215.en

Tetra Pak

Maintenance & Spare Parts

Flow Indicator

(Krohne Mess&Regeltechnik GmbH)
H250/RR/M40



1.0 1229491-0101.fro

Tetra Pak

Doc No. 1229491-0101

Flow Indicator

H250/RR/M40

This document refers to components specified in Technical Manual, on Maintenance & Spare Parts CD/DVD or on Tetra Pak Intranet.

1.0 1229491-0101.fro

Version 02 Issue 2013-10

Doc No. 1229491-0101

Tetra Pak

Tetra Pak Processing Systems AB

Table of contents

Function Description 1

General Information 1

Maintenance 2

Replacing and retrofitting 2

Retrofitting float damping 2

Retrofitting limit switch 3

Replacement - Retrofitting ESK4 4

Electrical connections 5

Spare Parts 7

Not applicable for this component! 7

1.0 1229491-0101.TOC

This page intentionally left blank

Function Description

General Information

The variable-area flowmeters are suitable for measuring gases, vapours and liquids.

The H250 M40 can be individually adapted for any application. It can be used purely as a mechanical meter with no need for auxiliary power, or it can be integrated into a field bus system.

2.2tf508304.en

Maintenance

Within the scope of routine maintenance of the system and pipelines, the flowmeter should also be inspected for signs of fouling, corrosion, mechanical wear and leaks, as well as damage to the measuring tube and indicator.

We advise that inspections be carried out at least once per year. The device must be removed from the piping before cleaning.

Caution! Pressurized pipes must be depressurized before removing the device. Empty pipes as much as possible.
In the case of devices being used for measuring aggressive or hazardous media, appropriate safety precautions must be taken with regard to residual liquids in the measuring unit.
Always use new gaskets when reinstalling the device in the pipeline.
Avoid electrostatic charges when cleaning the surfaces (e.g. sight window)!

Replacing and retrofitting

Retrofitting float damping

a) Remove the device from the piping.

b) Remove the upper snap ring (1) out of the measuring unit.

c) Remove the upper float catcher (2) and float (5) out of the measuring unit.

d) Fasten the spring washer (3) into the lower slot of the float's guide rod.

e) Slide the ceramic sleeve (4) on to the float's guide rod and attach it to the top slot using the spring washer (3).

f) Insert float into the lower float guide in the measuring unit.

g) Retrofit the supplied damping cylinder with the integrated float catcher (2) into the measuring unit.

h) Insert upper snap ring (1).

2.2tf508304.en

1 Snap ring
2 Float catcher
3 Spring washer
4 Ceramic sleeve
5 Float

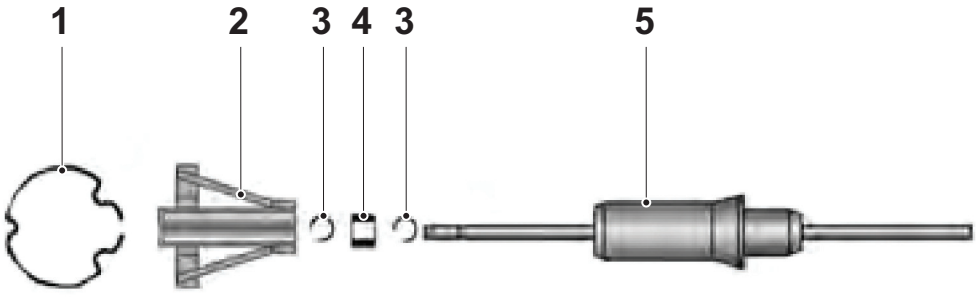

Retrofitting limit switch

a) Remove counter module (if available).

b) Merge contact pointer (1) in the middle.

c) Loosen the locking screw (2) on the contact pointer.

d) Insert the contact modules into the slot (4) of the bracket until the semi-circle of the contact board surrounds the pointer cylinder.

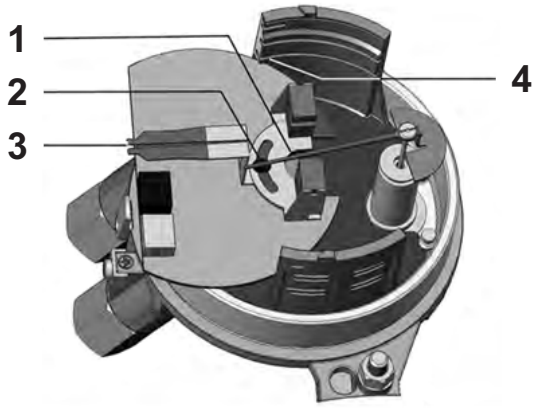

The contact module connecting terminals features a pluggable design and can be removed in order to connect the cables.

2.2tf508304.en

Replacement - Retrofitting ESK4

When replacing or retrofitting an ESK4, the following are required at the time of ordering:

- SN - Serial Number or
- SO - Sales Order

This information can be found on the indicator nameplate.

Note! The ESK4 is factory calibrated, making it possible to replace it or retrofit it without recalibrating.

a) De-energise the ESK4.

b) Lift and remove the ESK4 with a screwdriver.

Plug-in technology is used to install the ESK4

a) The ESK4 plug-in tongues (1) are plugged in under the two bolts (2) on the baseplate.

b) Slight pressure is used to press the ESK4 onto the spring pins (3) until it stops, firmly attaching the ESK4.



2.2tf508304.en

Electrical connections

After all service and maintenance work on the measuring device, the electrical connections must be checked.

Note! Use only original gaskets. They must be clean and free of any damage. Defective gaskets must be replaced.

Note! The electrical cables used must be undamaged.

a) The cables must be laid with a loop (1) upstream of the measuring device to prevent water from getting into the housing.

b) The cable feedthroughs (2) must be tightened.

c) Close the unused cable feedthroughs using blanking plugs (3).

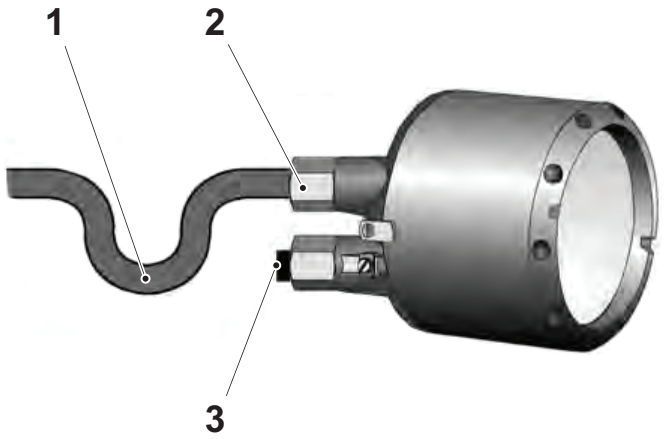

2.2tf508304.en

This page intentionally left blank

2.2tf508304.en

Spare Parts

Not applicable for this component!

2.2TF000880.en

Tetra Pak

Maintenance & Spare Parts

Proximity switch

(ifm electronic)

IF7020, IG5594, IG5596, II5846



1.0 1241250-0101.fro

Tetra Pak

Doc No. 1241250-0101

Proximity switch

This document refers to components specified in Technical Manual,
on Maintenance & Spare Parts CD/DVD or on Tetra Pak Intranet.

1.0 1241250-0101.fro

Version 02

Doc No. 1241250-0101

Tetra Pak

Tetra Pak Processing Systems AB

Function description 1

General 1

Maintenance 3

Proximity switch 3

Check. 3

LED 3

Change. 3

Spare Parts 5

Not applicable for this component! 5

1.0 1241250-0101.TOC

This page intentionally left blank

Function description

General

System design

The inductive proximity switch contains a coil (1) and a ferrite core (2). Together, these two components are a part of an oscillator. They set up a very low-energy electromagnetic field (3) which is radiated from the sensing face (4) of the switch. When an electric conductor, such as a metal target enters this field, currents begin to circulate in the conductor. The currents draw energy from the field. At a precise point the currents are so large that the amplifier cannot output sufficient energy, oscillation stops and the field collapses.

The two states: no object within the active zone, i.e. high amplitude oscillations and object within the active zone, i.e. oscillations with small amplitudes, are converted into a switching signal. This signal has a maximum number of changes per second, switching frequency.

This operating principle permits detection of all metals, whether they are moving or not.

2.2tf000768.en

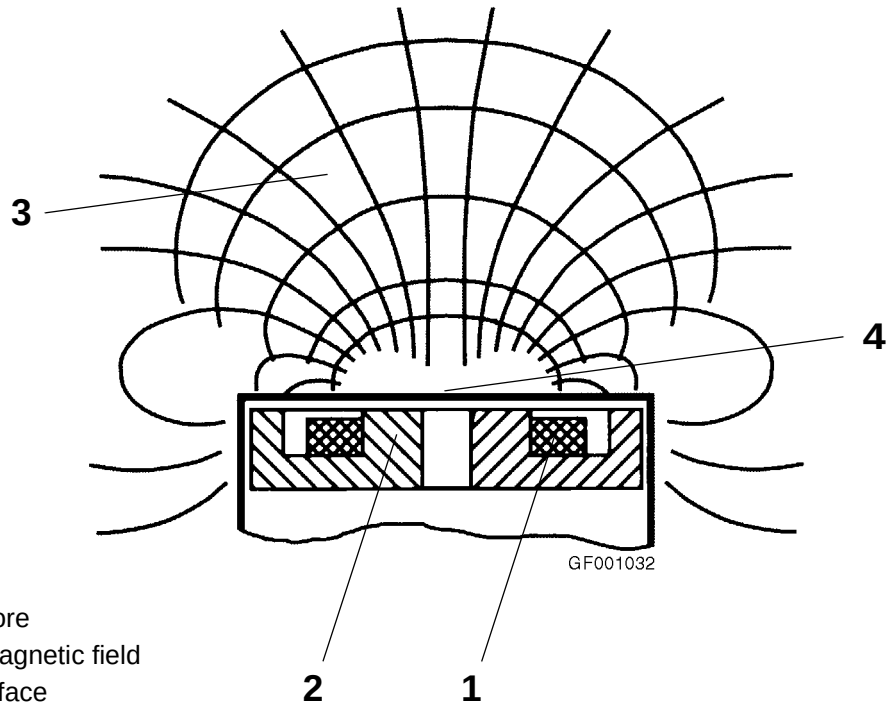

1 Coil
2 Ferrite core
3 Electromagnetic field
4 Sensing face

The distance to the sensing face at which an electrically conductive material causes a change of signal in the proximity switch is called sensing range. It is defined by a target made of steel (Fe 360). If other materials are used a certain correction factor must be applied to the range.

There is a difference between the switching on and the switching off-point, called hysteresis. Once the object is within range to switch the signal on, it

needs to be 1% to 15% of the sensing range more distant to switch the signal off.

Output

Two-wire switches require a small current in the open and the closed condition to supply the electronics.

As the output of a sensor consists of a semiconductor (transistor, thyristor or triac), in the switched state a small drop in the voltage in series with the load occurs. In the two-wire technology the voltage drop serves to provide energy to the electronics of the sensor.

Switches are either normally open, normally closed or programmable.
Normally open: object within the active zone - output closed/high signal.
Normally closed: object within the active zone - output opened/low signal.
Programmable: choice between normally closed or normally open.

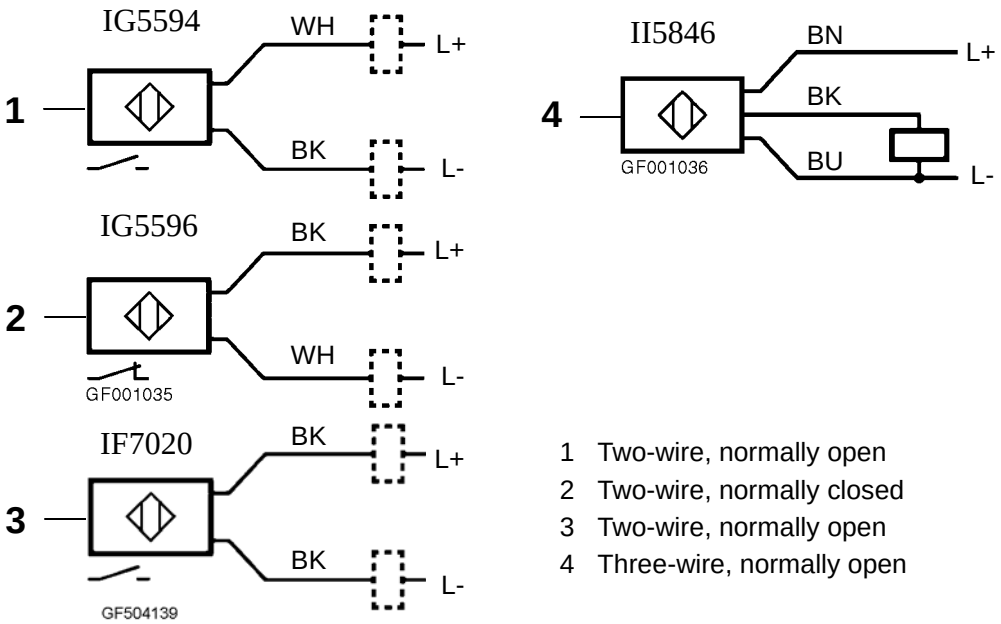

BK Black
BN Brown
BU Blue
WH White

2.2tf000768.en

1 Two-wire, normally open
2 Two-wire, normally closed
3 Two-wire, normally open
4 Three-wire, normally open

Maintenance

Proximity switch

Check

The operation of proximity switches is maintenance-free.

Caution! The following has to be observed for trouble-free operation: The sensing face and the clearances should be free of deposits and foreign bodies, especially when mounted with the sensing face up. Units with high RFI (e.g. walkie-talkies) should not be operated in the immediate vicinity of the proximity switch.

LED

The switches have a yellow LED which when it is lit indicates that the output is switched, i.e. object within the active zone.

Change

Flush mountable - IG5594, II5846

a) Remove power supply.

b) Measure the distance from the sensing face (1) to a reference point.

c) Disconnect the cable wires at the connection terminal and note which wire goes to which terminal, or if present disconnect the cable coupling.

d) Loosen locking nut (2) by means of a fork wrench (IG5594 - 24mm, II5846 - 36 mm).

e) Loosen the proximity switch by hand.

f) Mount the new switch. Rotate the switch in by hand until the earlier measured distance is reached.

Note! The sensing range (IG5594 - 5 mm, II5846 - 10 mm) must be observed. Operation is not guaranteed at ranges larger than sensing range.

g) Tighten locking nut (max. torque: IG5594 - 2 Nm, II5846 - 8 Nm)

h) Connect cable.

i) Reapply power.

j) Test switch function before engaging normal operation. If necessary adjust switch position by loosening the locking nut and rotating the switch by hand.

2.2tf000769.en

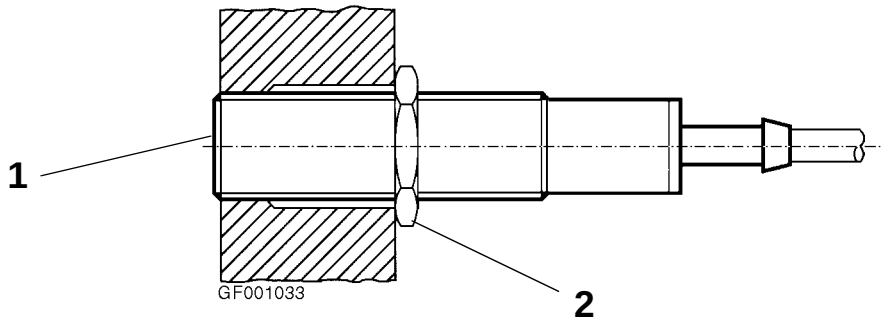

1 Sensing face
2 Locking nut

Non-flush mountable - IF7020, IG5596

a) Remove power supply.

b) Measure the distance from the sensing face (1) to a reference point.

c) Disconnect the cable wires at the connection terminal and note which wire goes to which terminal, or if present disconnect the cable coupling.

d) Loosen locking nuts (2) by means of two fork wrenches (IF7020 - 17 mm, IG5596 - 24 mm).

e) Loosen the proximity switch by hand.

f) Mount the new switch. Rotate the switch in by hand until the earlier measured distance is reached.

Note! The sensing range, IF7020 - 4 mm, IG5596 - 8 mm, must be observed. Operation is not guaranteed at ranges larger than sensing range.

g) Tighten locking nuts (max. torque: IF7020 - 1 Nm, IG5596 - 2 Nm)

h) Connect cable.

i) Reapply power.

j) Test switch function before engaging normal operation. If necessary adjust switch position by loosening the locking nuts and rotating the switch by hand.

2.2tf000769.en

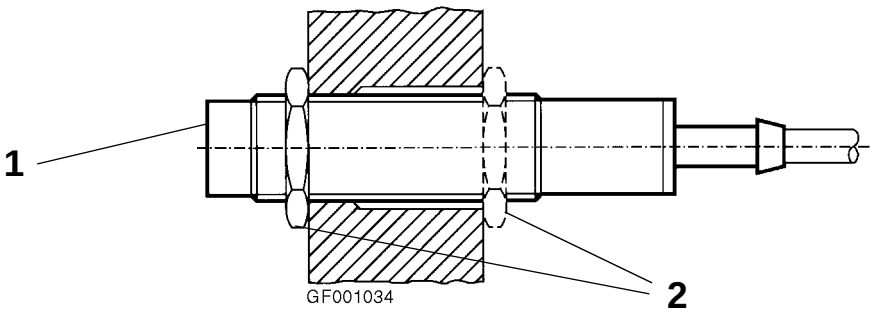

1 Sensing face
2 Locking nuts

Spare Parts

Not applicable for this component!

2.2TF000880.en

Tetra Pak

Maintenance & Spare Parts

Level transmitter
(Kübler)
Type EVK

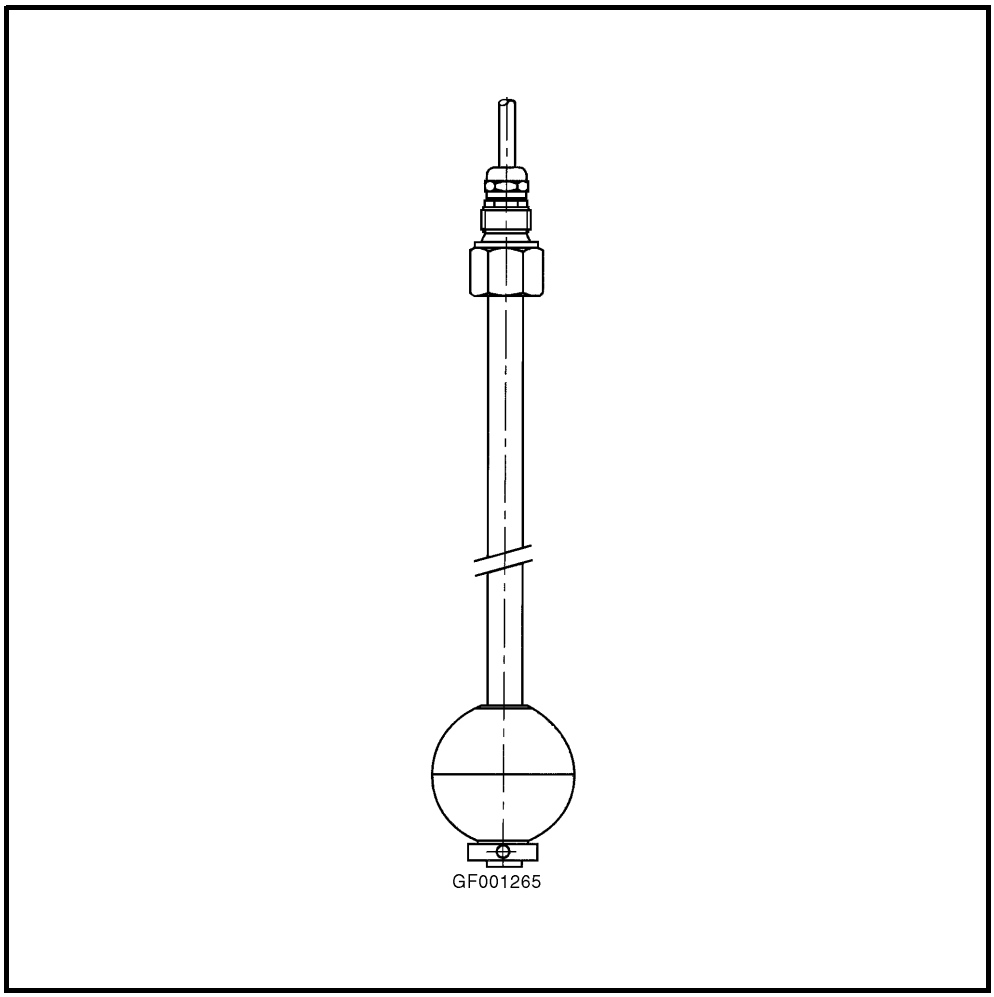

1.0 1241312-0101.fro

Tetra Pak

Doc No. 1241312-0101

Level transmitter

Type EVK

Article No.	Resolution	Length	Float type	Cable
90512-9634	5 mm	180 mm	SV	7 m
90503-0908	5 mm	700 mm	SV	7 m
6-31801-9325-1	15 mm	700 mm	SV	7 m
6-31801-9325-3	15 mm	900 mm	SV	7 m
90522-2086	15 mm	900 mm	SV	7 m
90511-2060	15 mm	1020 mm	SV	7 m
90522-2085	15 mm	1020 mm	SV	7 m

1.0 1241312-0101.fro

Version 07 Issue 2015-11

Doc No. 1241312-0101

Tetra Pak

Tetra Pak Processing Systems AB

Table of contents

Function description 1

General 1

Maintenance 2

Level transmitter 2

Check function 2

Change level transmitter 3

Spare Parts 4

Not applicable for this component! 4

This page intentionally left blank

Function description

General

The level transmitter works as a quantized potentiometer.
It features a three-wire resistance chain consisting of reed contacts (1) and series-connected resistors (2), which are built into the slip pipe (3). The reed contacts (1) are actuated by a permanent magnet, which is built into the float (4).
The level transmitter is used for measuring the level of liquid media.

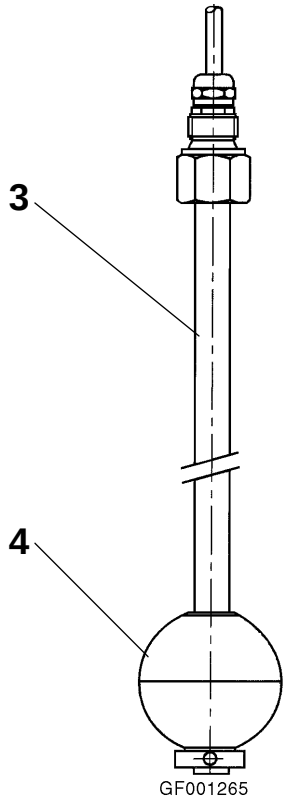

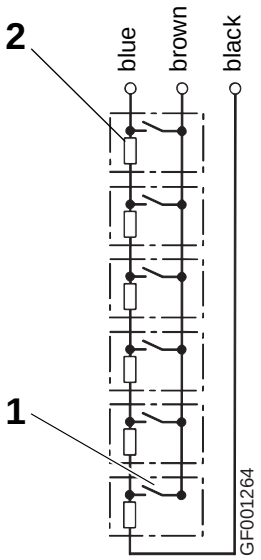

1 Reed contact
2 Resistor
3 Slip pipe
4 Float

2.2TF000932.EN

Maintenance

Level transmitter

Check function

WARNING!

Risk of electrical shock!
Always turn off the power supply prior to disconnecting the transmitter.

A function test can only be carried out when the transmitter has been disconnected.

a) Disconnect the wires (blue, brown and black) at the terminals, see Electrical Manual EM.

b) Connect an ohmmeter to two of the wires.

c) Move the float by hand from 0% to 100%.

d) The displayed resistance value changes continuously depending on the connected wire colours:

black - brown	blue - brown	black - blue
Resistance value increases when moving the float from 0% to 100%.	Resistance value decreases when moving the float from 0% to 100%.	Display of the total resistance (also given on the tag plate mounted at the level transmitter).

2.2TF000933.EN

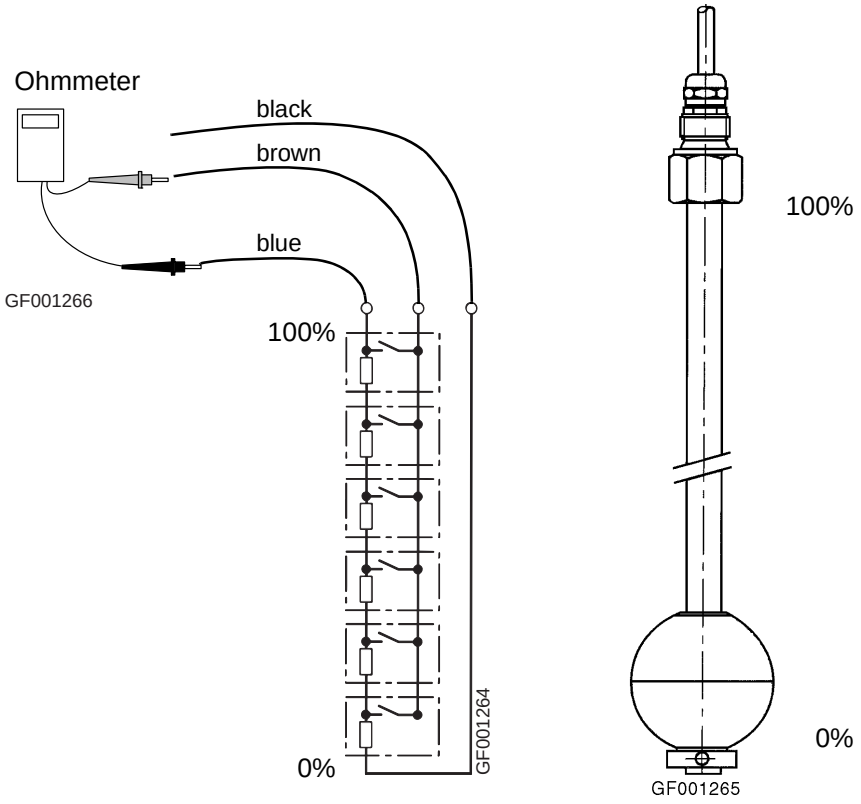

Change level transmitter

WARNING! **Risk of electrical shock!**
Always turn off the power supply prior to disconnecting the transmitter.
Read the instructions and warnings for the tank before proceeding.

Note! The level transmitter only works correctly when mounted in vertical position. The max. deviation from vertical is ± 30° and must not be exceeded.

a) Note the position of the three wires (blue, brown and black) and disconnect them from their terminals, see “Electrical Manual, EM”.

b) Loosen the mechanical fitting that holds the level transmitter.

If removing the float make sure to mark "top" for proper reinstallation.

c) Remove the level transmitter.

d) Assemble in reverse order.

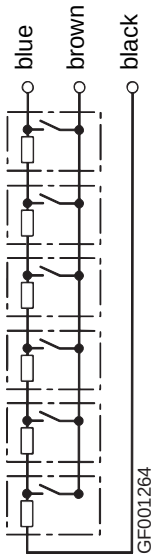

2.2TF000933.EN

Spare Parts

Not applicable for this component!

1.0TF000934.EN

This page intentionally left blank

1.0TF000934.EN

Tetra Pak

Maintenance & Spare Parts

Level Switch

(Endress+Hauser)

FTL31/FTL33



1.0 3283723-0101.fro

Tetra Pak

Doc No. 3283723-0101

Level Switch

FTL31/FTL33

This document refers to components specified in Technical Manual, on Maintenance & Spare Parts CD/DVD or on Tetra Pak Intranet.

1.0 3283723-0101.fro

Version 02 Issue 2016-03

Doc No. 3283723-0101

Tetra Pak

Tetra Pak Processing Systems AB

Table of contents

Function Description 1

Operating mode 2

Wiring 4

Maintenance 6

Function Test 6

Check Functionality 7

Change Level Limit Switch. 8

Cleaning 10

Spare Parts 11

Not applicable for this component! 11

1.0 3283723-0101.TOC

This page intentionally left blank

Function Description

The forks of the level limit switch are vibrating with a piezoelectric drive. The unit registers the frequency of the vibrations. Depending of the operating mode selected (MAX or MIN safety), the level limit switch will switch off safely in the event of a fault (e.g. if the power supply line is interrupted). The level limit switch is available for installation in a welding boss, or for Tri-Clamp installation. There are both AC and DC versions.

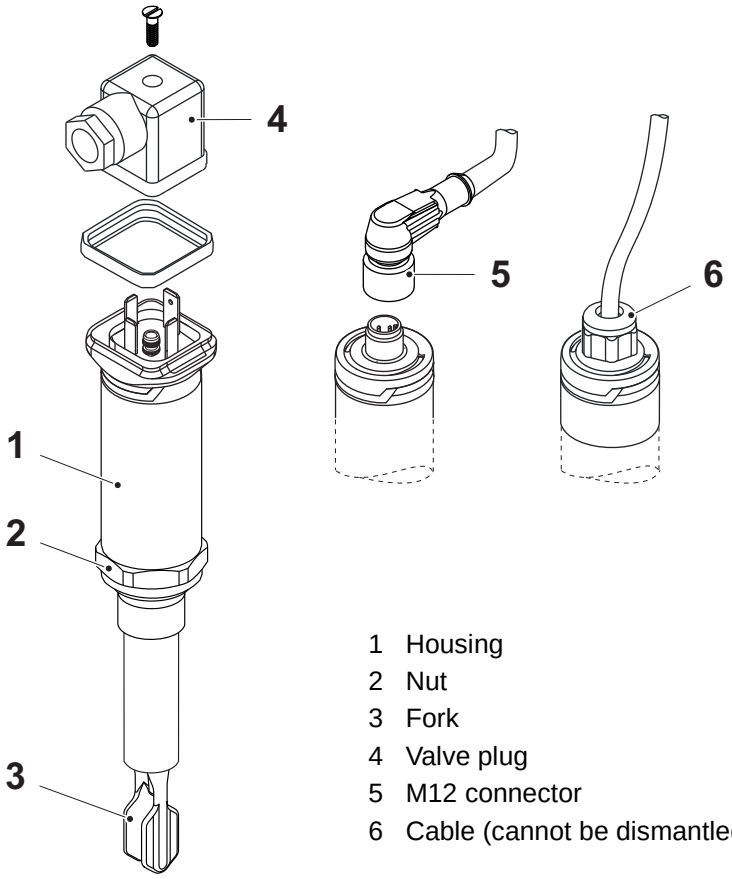

1 Housing
2 Nut
3 Fork
4 Valve plug
5 M12 connector
6 Cable (cannot be dismantled)

2.2tf509151.en

Operating mode

Fail-safe mode

The level limit switch can be connected in two operating modes. Depending on the operating mode selected (MAX or MIN safety), the switch will switch off safely in the event of a fault, (e.g. if the power supply line is interrupted).

MAX- maximum fail-safe mode:

The level limit switch keeps the electronic switch closed as long as the fluid level is below the fork. For example: overspill protection.

MIN- minimum fail-safe mode:

The level limit switch keeps the electronic switch closed as long as the fork immersed in fluid. For example: dry running protection of pumps.

Valve plug connector

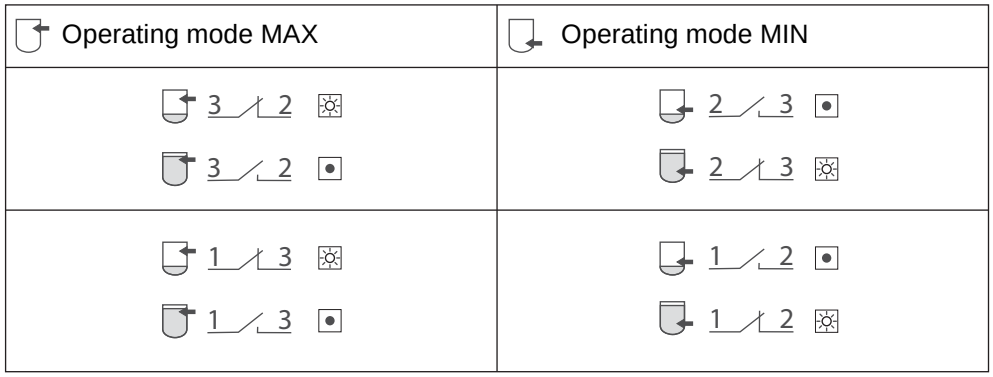

2.2tf509151.en

Yellow LED lit
Yellow LED not lit

(Cont'd)

(Cont'd)

Cable connector (cannot be dismantled)

Operating mode MAX	Operating mode MIN
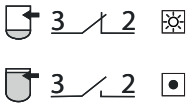	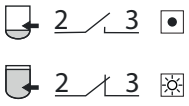
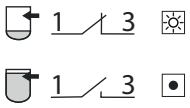	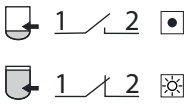

☼ Yellow LED lit
⊡ Yellow LED not lit

M12 connector

Operating mode MAX	Operating mode MIN
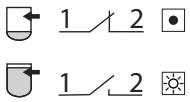	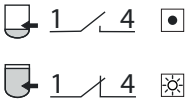

☼ Yellow LED lit
⊡ Yellow LED not lit

Connection for function monitoring with antivalence	Yellow LED	Red LED
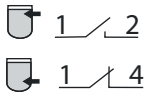	☼	•
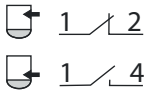	•	•
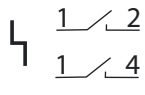	•	☼

☼ LED lit
⊡ LED not lit
↳ Fault or warning

2.2tf509151.en

Wiring

WARNING!

Risk of electrical shock!
Disconnect supply circuits prior to do any wiring.

Valve plug

Operating mode MAX	Operating mode MIN
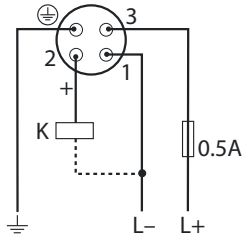	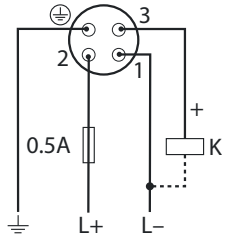
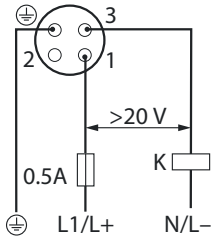	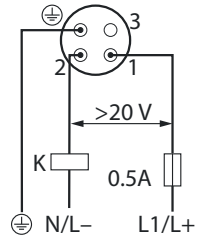

2.2tf509151.en

Cable connector (cannot be dismantled)

Operating mode MAX	Operating mode MIN
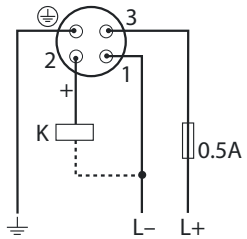	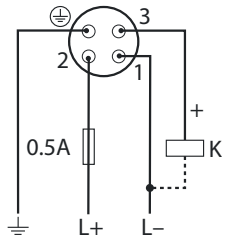
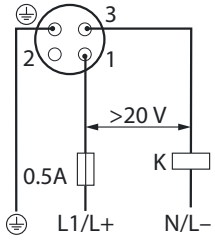	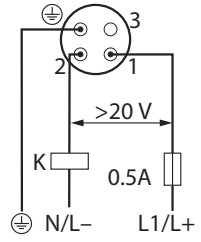

(Cont'd)

(Cont'd)

M12 connector

Operating mode MAX	Operating mode MIN
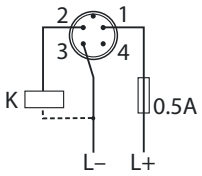	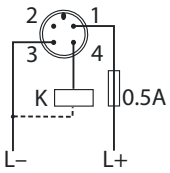

Connection for function monitoring with antivalence
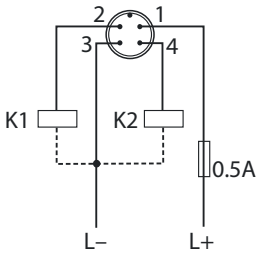

2.2ff509151.en

Maintenance

Function Test

WARNING!

Risk of electrical shock!
Process may be trigged accidentally in the system if the switching state is changed! Make sure that no dangerous processes can be triggered in the system.

a) Hold the test magnet (2) against the mark (3).

b) The level limit switch (1) changes switching state.

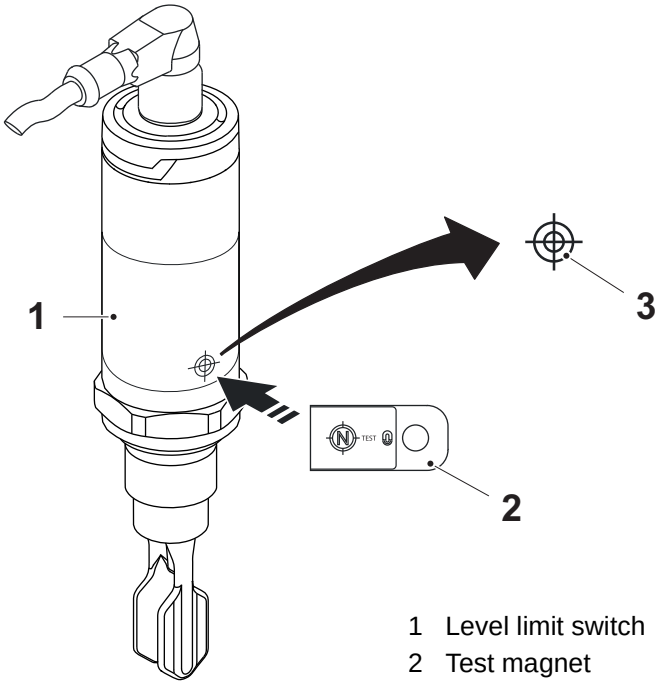

1 Level limit switch
2 Test magnet
3 Mark

2.2tf509151.en

Check Functionality

LED-Display

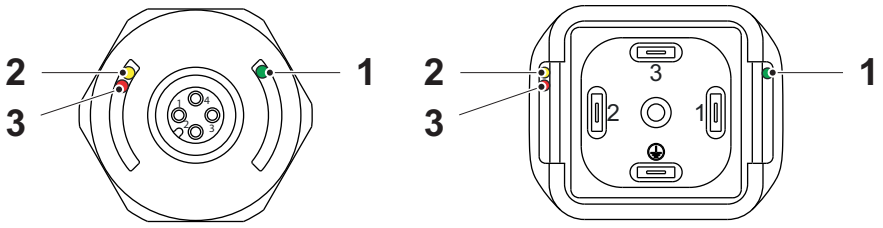

M12 Valve plug

1 Green LED
2 Yellow LED
3 Red LED

Note! For the metallic housing cover, there is no external signaling via LEDs.

Function	**Description**
Green LED (1) lit	Device is optional
Yellow LED (2) lit	**M12 connector** Indicates the sensor state: tuning fork is covered by liquid **Valve plug / cable** Indicates the switching state: • MAX operating mode (overfill prevention): sensor is not covered by liquid • MIN operating mode (dry running protection): the sensor is covered by liquid
Red LED (3) Flashing Lit	 Warning/maintenance required: error can be rectified, e.g. incorrect wiring Fault/device failure: error cannot be rectified, e.g. electronic error

2.2ff509151.en

Change Level Limit Switch

WARNING! **Risk of electrical shock!**
Always disconnect supply circuits prior to changing any parts.

Caution! Do not bend, shorten or lengthen the fork.

Caution! Do not use the house to turn the switch.

Disassemble

a) Loosen the screw (1) at the top of the valve plug (2).

b) Disconnect the valve plug (2).

c) Welded adapter:
Unscrew the level limit switch nut (4), with an open-ended wrench (7) and remove the level limit switch (3).
Tri-Clamp connection:
Loosen the clamp (9) and remove the level limit switch (3).

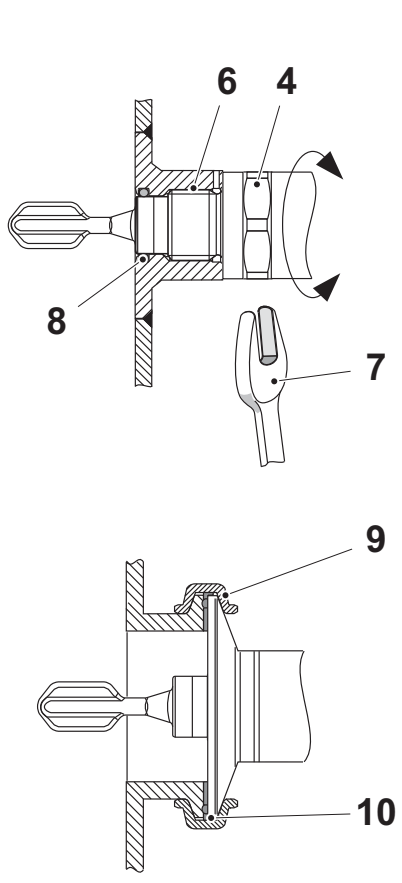

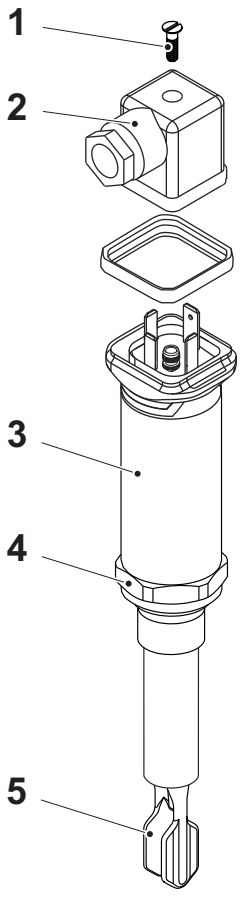

1 Screw
2 Valve plug
3 Limit switch
4 Nut
5 Fork
6 Thread
7 Wrench
8 Sealing washer
9 Clamp
10 Seal ring

2.2tf509151.en

(Cont'd)

(Cont'd)

Reassemble

a) Welded adapter:
Wrap the threads (6) with Teflon (PTFE) tape or use the sealing washer (8). Screw the level limit switch into the connection.

b) Welded adapter:
Tighten the level limit switch nut (4) gently with an 32 mm open-ended wrench (7).

c) Tri-Clamp connection:
Install the level limit switch by means of the clamp (9). Always use a new seal ring (10).

d) Adjust the forks (5), and use the arrow on the switch as reference. If installed horizontally in a tank, the arrow should point up or down. If installed on pipes, the arrow should point in the pipe direction.

e) Fit the valve plug (2) and thighten the screw (1).

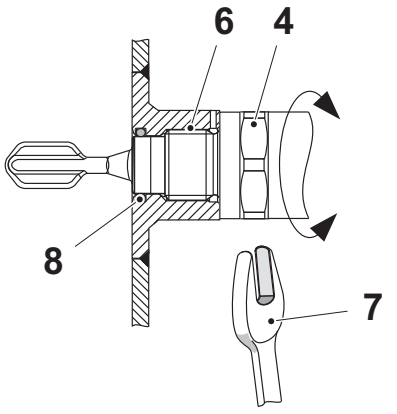

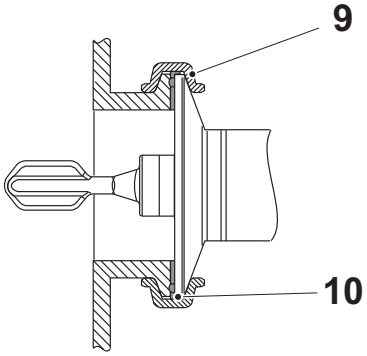

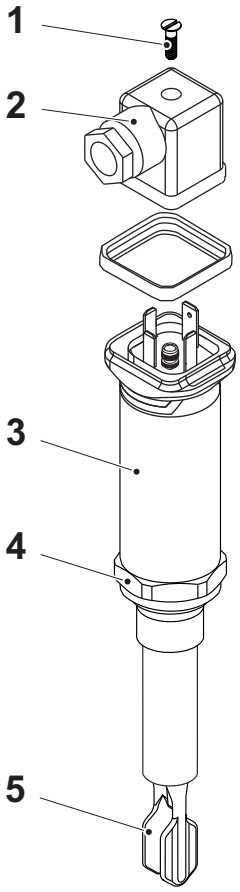

1 Screw
2 Valve plug
3 Limit switch
4 Nut
5 Fork
6 Thread
7 Wrench
8 Sealing washer
9 Clamp
10 Seal ring

2.2ff509151.en

Cleaning

Caution! Caution! Do not damage device by knocks or bending!

Caution! Caution! Never use a hammer or similar tools for cleaning!

Remove any build-ups on the forks. Clean the fork with shower water and a wire brush.

2.2tf509151.en

Spare Parts

Not applicable for this component!

2.2tf509152.en

Tetra Pak

Maintenance & Spare Parts

Temperature Transmitter
(Pentronic)
TPT12



1.0 3283902-0101.fro

Tetra Pak

Doc No. 3283902-0101

Temperature Transmitter

TPT12

This document refers to components specified in Technical Manual, on Maintenance & Spare Parts CD/DVD or on Tetra Pak Intranet.

1.0 3283902-0101.fro

Version 01 Issue 2015-07

Doc No. 3283902-0101

Tetra Pak

Tetra Pak Processing Systems AB

Table of contents

Function Description 1

Maintenance 2

Change Transmitter 2

Spare Parts 3

Not applicable for this component! 3

1.0 3283902-0101.TOC

This page intentionally left blank

Function Description

The transmitter combined with a Pt100 sensor, delivers a standardized 4-20 mA signal to PLC or control system.

The sensor has direct contact with the medium if it is not installed in a thermowell. The joint to the boss makes a metallic seal and thus no spare seal is required.

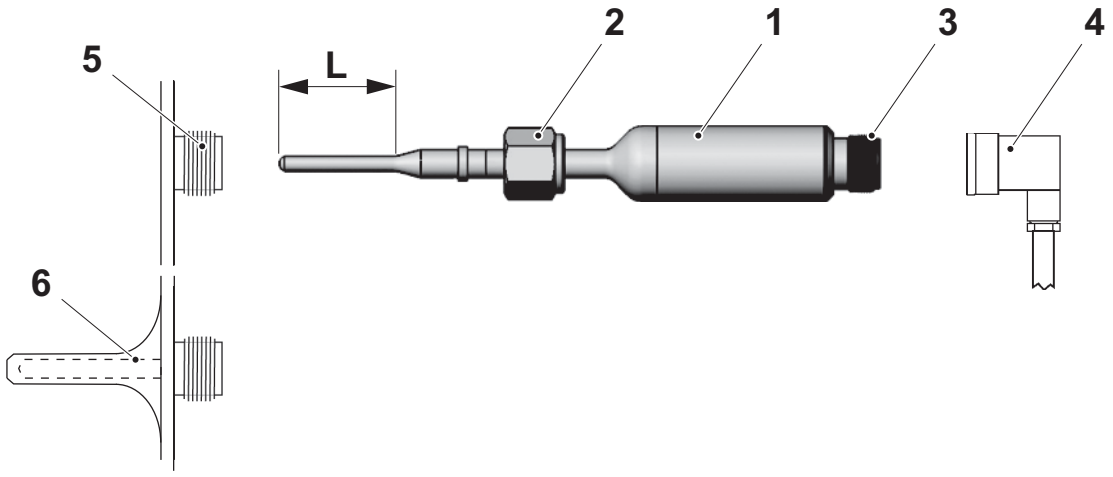

L = Probe length

2.2tf509202.en

1 Sensor
2 Nut
3 Electrical connection
4 Connector
5 Boss
6 Thermowell

Maintenance

Change Transmitter

WARNING! **Risk of injury!**
Make sure before dismantling, that the pipeline is drained and free from media.
Never change the transmitter when it is hot!

Caution! Handle the transmitter with care and ensure that the tip and/or neck tube are not bent.
Shut off the power supply before changing the transmitter.

Caution! Do not perform any type of welding work when the transmitter is mounted.

a) Disconnect the connector (4).

b) Loosen the nut (2) and release the sensor (1).

c) Clean the boss (5).

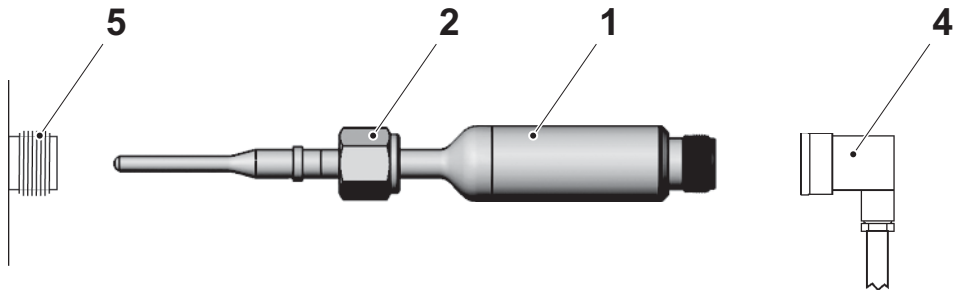

2.2tf509202.en

1 Sensor
2 Nut
4 Connector
5 Boss

d) Change the sensor and assemble in reverse order. Tighten the nut (2) with a torque of 7 ± Nm and tighten the nut of the connector (4) with an approximate torque of 0.7 Nm.

Spare Parts

Not applicable for this component!

2.2tf509203.en

Tetra Pak

Maintenance & Spare Parts

Conductivity Meter

(Endress & Hauser)

Smartec CLD 18

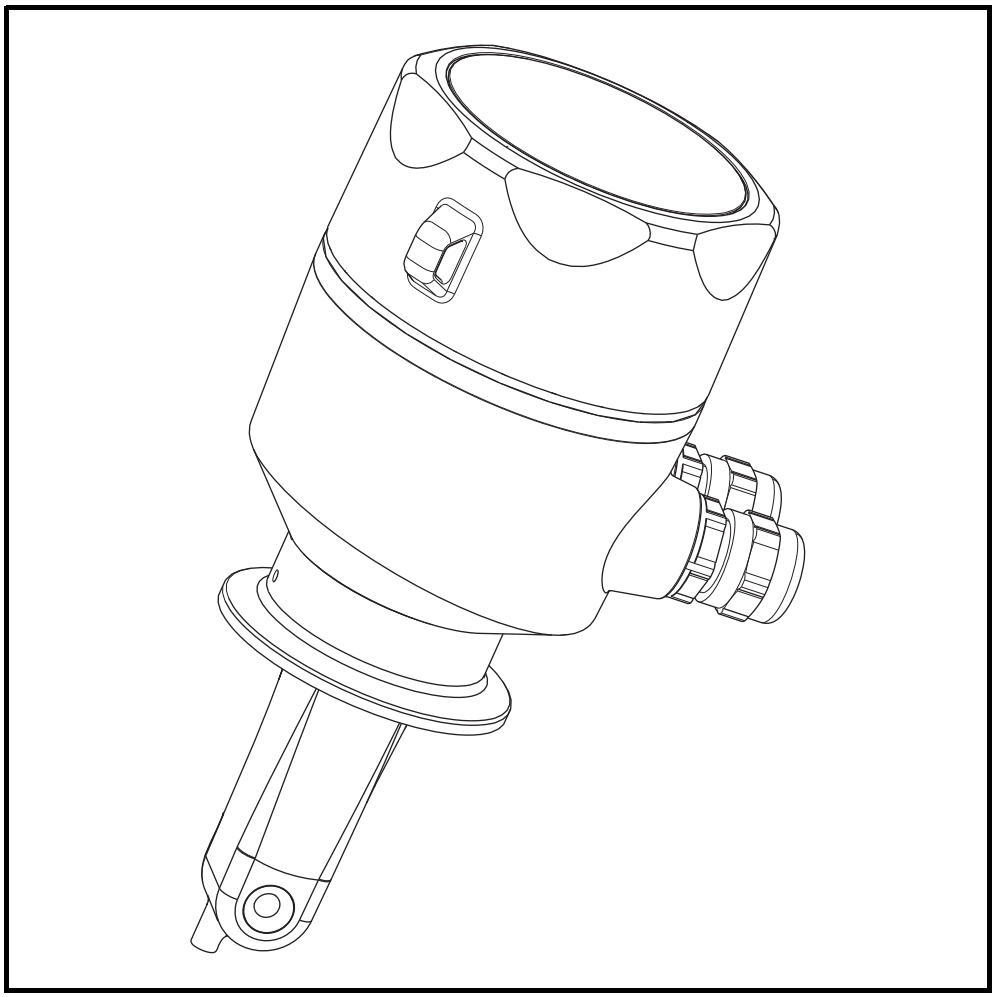

1.0 3283946-0101.fro

Tetra Pak

Doc No. 3283946-0101

Conductivity Meter

Smartec CLD 18

This document refers to components specified in Technical Manual, on Maintenance & Spare Parts CD/DVD or on Tetra Pak Intranet.

1.0 3283946-0101.fro

Version 01 Issue 2015-10

Doc No. 3283946-0101

Tetra Pak

Tetra Pak Processing Systems AB

Function Description 1

Maintenance 2

Change 2

Electrical Connection 2

Replace The Compact Device 3

Display Settings. 5

Device Configuration 6

Clean 7

Prohibited Cleaning Agents 7

Troubleshooting 7

Spare Parts 9

Not applicable for this component! 9

1.0 3283946-0101.TOC

This page intentionally left blank

Function Description

A generator (1) generates an alternating magnetic field in the primary coil (2) which induces a current in the medium (3). The strength of the induced current depends on the conductivity and thus the ion concentration of the medium. The current flow in the medium generates another magnetic field in the secondary coil (4). The resulting current induced in the coil is measured by the receiver (5) and processed to determine the conductivity.

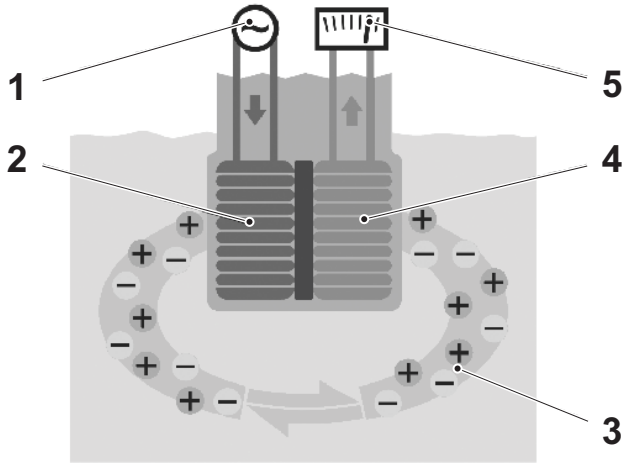

2.2tf509218.en

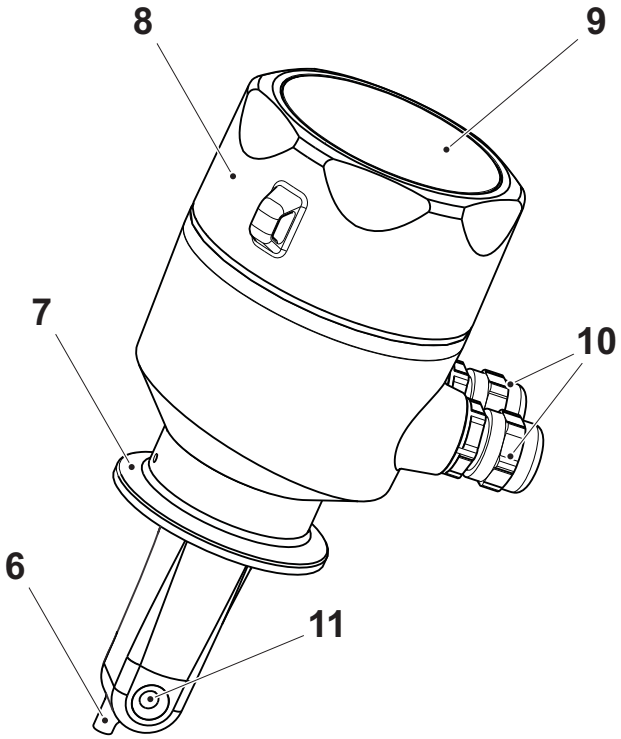

6 Temperature sensor
7 Process connection
8 Removable housing cover
9 Window for display
10 Cable glands
11 Flow opening of the sensor

Maintenance

WARNING!

Risk of injury if medium escapes!
Before performing any maintenance work, make sure that the process pipe is unpressurized, empty and has been rinsed.

Change

If defective, replace the entire conductivity meter.

Electrical Connection

DANGER!

Incorrect wiring can result in injury or death!
The device is live. The electrical connection may only be established by an electrical technician. The electrical technician must have read and understood these Operating Instructions and must follow the instructions they contain. Before beginning the connection work, ensure that no voltage is applied to any of the cables.

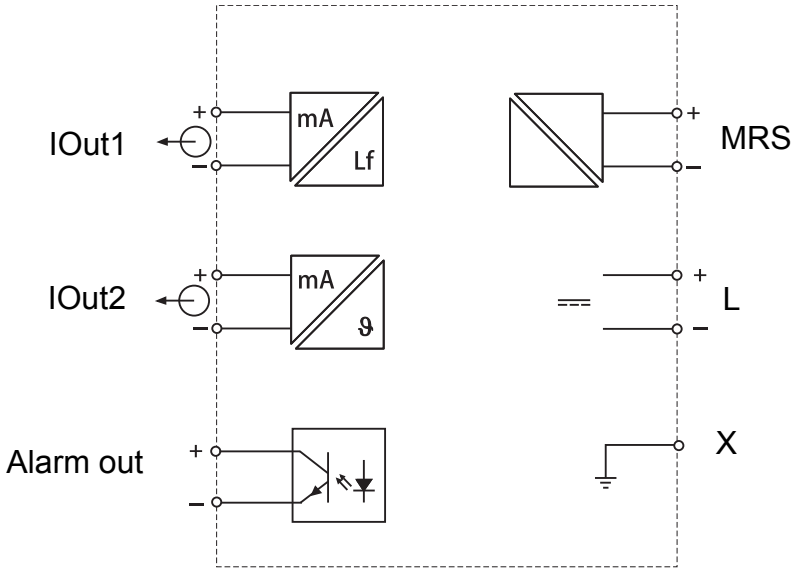

2.2tf509218.en

(Cont'd)

(Cont'd)

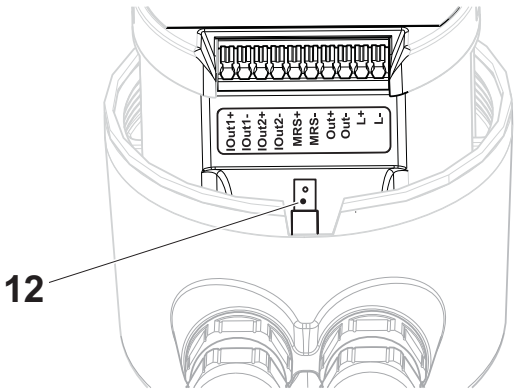

IOut1	Conductivity
IOut2	Temperature
MRS	Binary input (measuring range switch)
Out	Alarm output (open-collector)
L+/L-	Power supply
12	Grounding pin (flat male tab 4.8mm)

Replace The Compact Device

WARNING!

Risk of injury!
Make sure before disassembling that the system is drained and free from media. Always set the safety switch in off position when performing maintenance.

2.2tf509218.en

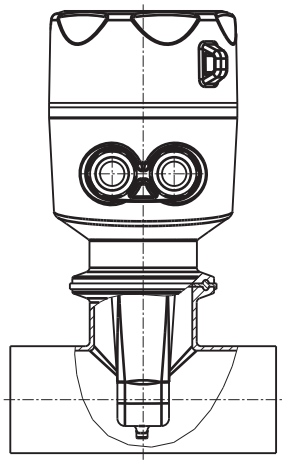

Tri-Clamp process connection

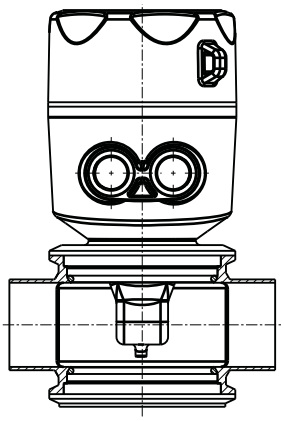

Varivent process connection

a) Unscrew the housing cover.
b) Observe the location of all connected wires and write them down.
c) Disconnect the wires.

(Cont'd)

(Cont'd)

d) Disconnect the device from the pipe nozzle or tank nozzle via the process connection.

e) Remove the device.

Select a sensor installation depth such that the coil body is fully covered by the medium. Information concerning the distance between the sensor and the wall is displayed in the image below.

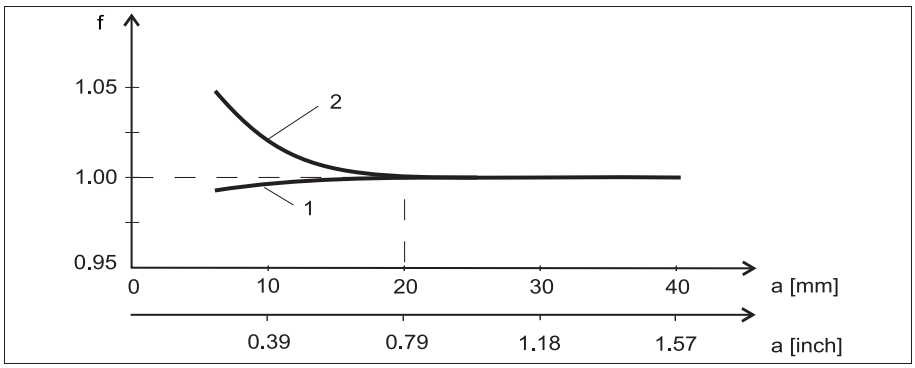

Relationship between the installation factor "f" and the distance from wall "a".

f) Mount the new compact device directly on a pipe nozzle or tank nozzle via the process connection.

g) Align the compact device in such a way that the medium flows through the flow opening of the sensor in the direction of medium flow. Use the arrow on the nameplate as help when aligning the device.

h) Unscrew the housing cover.

i) Guide the connecting cables through the cable glands.

j) Connect the wires as per the terminal assignment diagram.

k) Connect the protective ground to the terminal pin for the housing ground.

l) Mount the housing cover.

2.2tf509218.en

Display Settings

Press the 'E'-key to call up the main menu. The "Display" menu appears on the display. Press the 'E'-key again to open the menu. Use the "x Back" option, which can be found at the bottom of each menu, to move up a level in the menu structure.

Parameter	Possible settings	Description
Contrast	1 to 7 Default: **5**	Setting for the contrast
Brightness	1 to 7 Default: **5**	Setting for the brightness of the display
Alternating time	0, 3, 5, 10 s Default: **5**	Alternating time between the two measured values 0 means that the values do not alternate on the display

2.2tf509218.en

Device Configuration

Default settings are in bold.

Parameter	Possible settings	Description
Current range	**4-20 mA** 0-20 mA	Select the current range
Out1 0/4 mA	0 to 2000000 µS/cm **0 µS/cm**	Use this parameter to enter the measured value at which the minimum current value (0/4 mA) is present at the transmitter output.
Out1 20 mA	0 to 2000000 µS/cm **0 µS/cm**	Use this parameter to enter the measured value at which the maximum current value (20 mA) is present at the transmitter output
Out2 0/4 mA	-50 to 250 °C **0.0 °C**	Use this parameter to enter the measured value at which the minimum current value (0/4 mA) is present at the transmitter output
Out2 20 mA	-50 to 250 °C **100.0 °C**	Use this parameter to enter the measured value at which the maximum current value (20 mA) is present at the transmitter output
Damping main	0 to 60 s **0 s**	Damping value for the conductivity measured value
Extended setup		Extended settings The functions are described in the following section
Manual hold	**Off**, On	Function for freezing the current and alarm outputs

2.2tf5092218.en

Clean

Only clean the front of the housing with commercially available cleaning agents. The front is resistant to the following as per DIN 42 115:

- Ethanol (short periods)
- Diluted acids (max. 2% HCl)
- Diluted bases (max. 3% NaOH)
- Soap-based household cleaners

Prohibited Cleaning Agents

WARNING!

Risk of damaging the housing surface or housing sealing!
Never use concentrated mineral acids or bases for cleaning purposes. Never use organic cleaners such as benzyl alcohol, methanol, methylene chloride, xylene or concentrated glycerol cleaner.

Troubleshooting

Display	Cause	Remedial action
No measured value displayed	No power supply connected	Check the power supply of the device
	Power is supplied, device is defective	The device must be replaced
Diagnostic message is displayed	The list of diagnostic messages is provided in the following section	

2.2tf509218.en

This page intentionally left blank

2.2tf509218.en

Spare Parts

Not applicable for this component!

2.2TF000880.en

Tetra Pak

Maintenance & Spare Parts

Balance tank

(Tetra Pak)

BTD-200 / BTD-200L Lacta

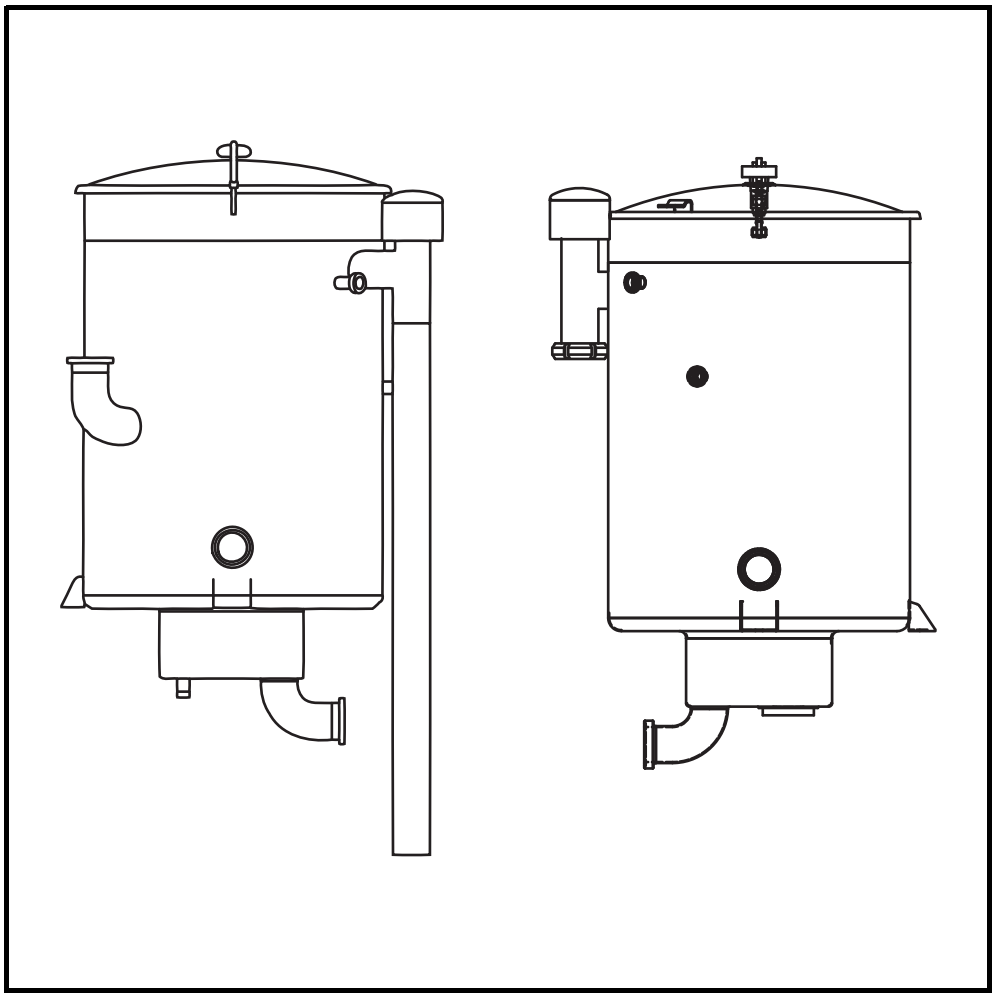

1.0 1213378-0101.fro

Tetra Pak

Doc No. 1213378-0101

Balance tank

BTD-200 / BTD-200L Lacta

Article No.	Type	Bottom	Comment
6-31542-0805-1	Std	Suction cup	No legs, CIP spray ball
6-31542-0805-2	Std	Suction cup	No legs, CIP spray ball, CIP inlet
6-31542-0944-1	Std	Suction cup	No legs, CIP spray ball
6-31542-0944-2	Std	Suction cup	No legs, CIP spray ball, CIP inlet
6-31542-1057-1	Std	Suction cup	No legs, CIP spray ball
6-31542-1057-2	Std	Suction cup	No legs, CIP spray ball, CIP inlet
6-31542-1072-1	Std	Suction cup	-
6-31542-1099-1	Std	Suction cup	No legs, CIP spray ball
6-31542-1100-1	Std	Suction cup	No legs, CIP spray ball, CIP inlet
6-31542-1101-1	Std	Suction cup	No legs, CIP spray ball, CIP inlet
6-31542-1101-2	Std	Suction cup	No legs, CIP spray ball, CIP inlet
6-31542-1101-3	Std	Suction cup	No legs, CIP spray ball
6-31542-1102-1	Std	Suction cup	No legs, CIP spray ball, CIP inlet, cream inlet
6-31542-1102-2	Std	Suction cup	No legs, CIP spray ball, CIP inlet
6-31542-1102-3	Std	Suction cup	No legs, CIP spray ball, cream inlet
6-31542-1102-4	Std	Suction cup	No legs, CIP spray ball
6-31542-1246-1	Std	Suction cup	No legs, CIP spray ball, CIP inlet
6-31542-1284-1	Std	Suction cup	No legs, CIP spray ball, CIP inlet
6-31542-1284-2	Std	Suction cup	No legs, CIP spray ball, CIP inlet
6-31542-1294-1	Std	Suction cup	No legs, CIP spray ball
6-31542-1412-1	Lacta	Suction cup	No legs, CIP spray ball, CIP inlet
6-31542-1412-2	Lacta	Suction cup	No legs, CIP spray ball, CIP inlet
6-31542-1412-3	Lacta	Suction cup	No legs, CIP spray ball, CIP inlet
6-31542-1412-4	Lacta	Suction cup	No legs, CIP spray ball, CIP inlet
6-31542-1464-1	Std	-	No legs
6-31542-1464-2	Std	-	No legs, CIP inlet

1.0 1213378-0101.fro

Version 24 Issue 2016-12

Doc No. 1213378-0101

Tetra Pak

Tetra Pak Processing Systems AB

Article No.	Type	Bottom	Comment
6-31542-1464-3	Std	-	No legs, CIP spray ball
6-31542-1464-4	Std	-	No legs, CIP spray ball, CIP inlet
6-31542-1491-1	Std	Suction cup	No legs, CIP spray ball, CIP inlet
6-31542-1492-1	Std	Suction cup	No legs
6-31542-1495-1	Std	Suction cup	No legs, CIP spray ball, CIP inlet
6-31542-1496-1	Std	Suction cup	No legs
6-31542-1510-1	Std	Suction cup	No legs, CIP spray ball, CIP inlet
6-31542-1523-1	Lacta	-	No legs, CIP spray ball
6-31542-1523-2	Lacta	-	No legs, CIP spray ball
6-31542-1523-3	Lacta	-	No legs, CIP spray ball
6-31542-1523-4	Lacta	-	No legs, CIP spray ball
6-31542-1571-1	Std	Suction cup	No legs, CIP spray ball, CIP inlet
6-31542-1582-1	Std	Suction cup	No legs, CIP spray ball, CIP inlet
6-34620-0020-1	Lacta	Suction cup	No legs, CIP spray ball, CIP inlet
90519-8740	Lacta	-	No legs
90519-8741	Lacta	-	No legs, CIP spray ball

1.0 1213378-0101.fro

This page intentionally left blank

Table of contents

Function description 1

General 1

Maintenance 2

Balance tank 2

Change manhole cover seal 3

Change sprayball 4

Spare Parts 6

1.0 1213378-0101.TOC

This page intentionally left blank

Function description

General

Note! The design of the tank can vary slightly between different BTD-200 models.

The balance tank is a stainless steel container. It is used as a level controller for the product.

The outlet is placed at the bottom of the tank in a suction cup.

The unit have Cleaning In Place ability (CIP) via spray balls.

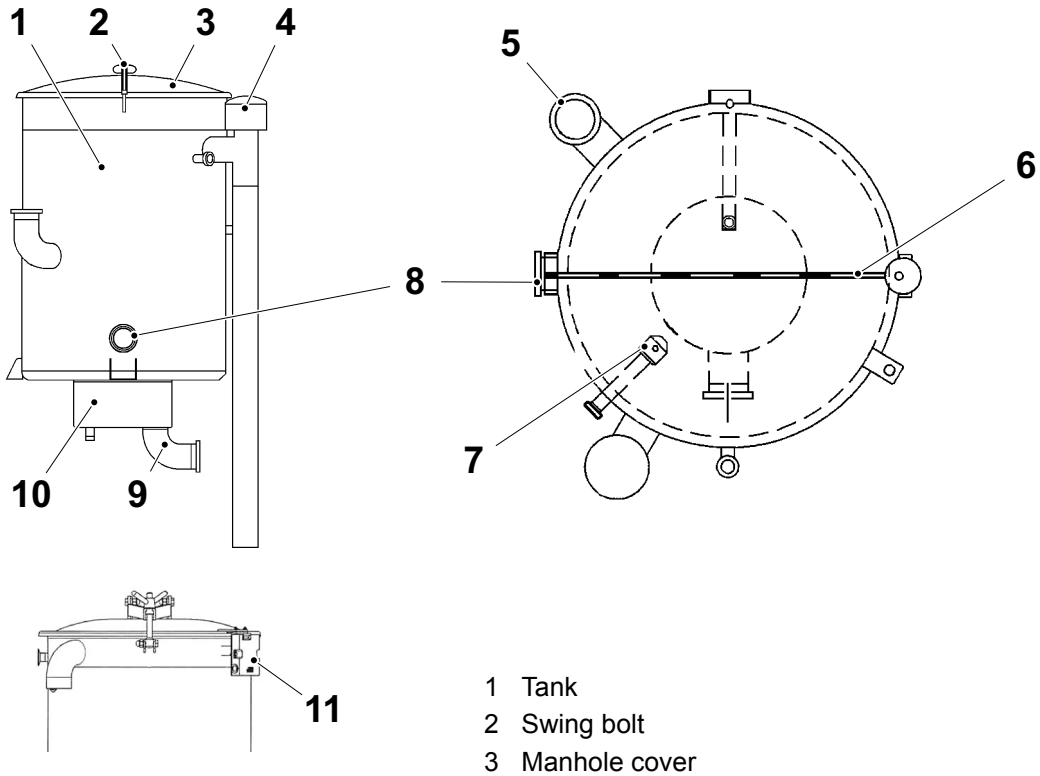

2.2tf501590.en

1 Tank
2 Swing bolt
3 Manhole cover
4 Ventilation cap
5 Product return
6 Bracket
7 Spray ball
8 Inlet
9 Outlet
10 Suction cup
11 Safety interlock switch

Maintenance

Balance tank

When servicing the units, always observe the following:

WARNING!

Risk of burns!
Hot surfaces; always let the unit cool down to ambient temperature.

Risk of injury!
Liquid under pressure; always use protective goggles.

Risk of injury!
Make sure before dismantling, that the pipeline is drained and free from media.

Risk of corrosion!
The cleaning liquid in the system might be aggressive.

2.2tf501591.en

Change manhole cover seal

a) Make sure no cleaning or production is running including the balance tank.

b) Open the cover (1):
   - Unscrew the knob (2).
   - Swing the swing bolt (3) to release the bracket (4).
   - Swing the bracket (4) with the cover (1) over so that the seal (5) is accessible.

c) Pry the seal (5) off.

d) Fit the new seal (5) and assemble in the reverse order.

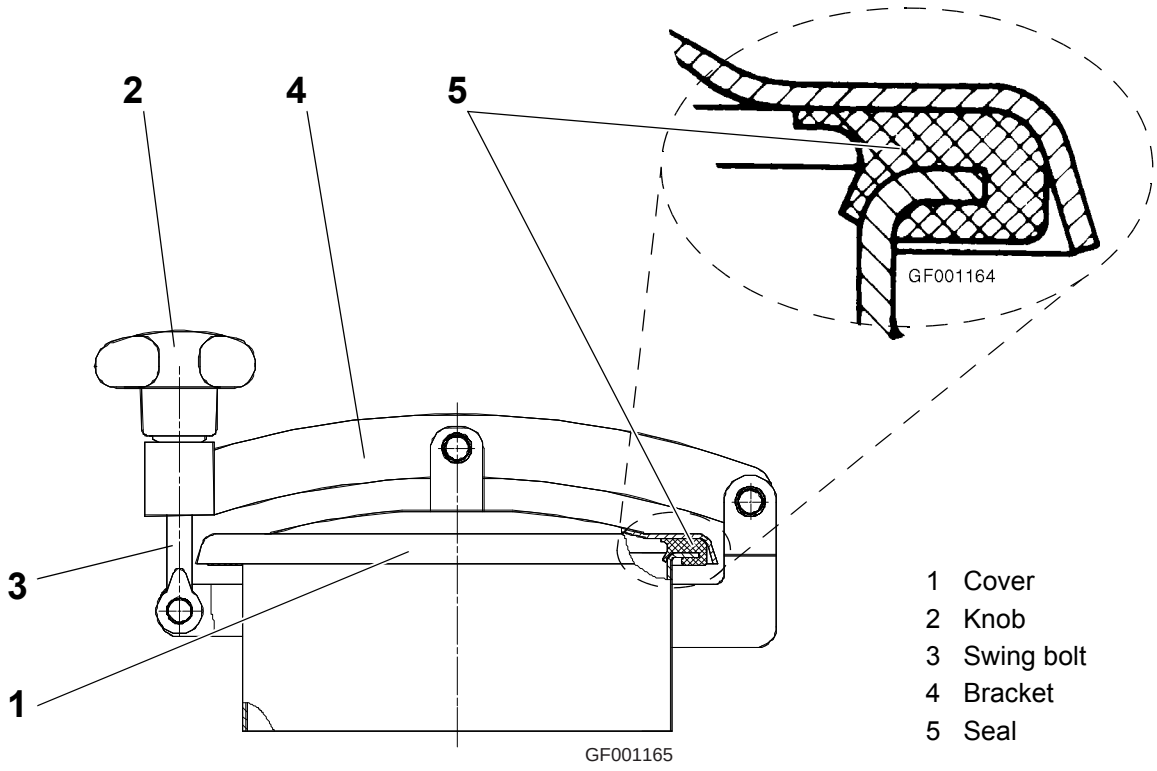

1 Cover
2 Knob
3 Swing bolt
4 Bracket
5 Seal

2.2tf501591.en

Change sprayball

Note! The design of the tank can vary slightly between different BTD-200 models.

a) Make sure no cleaning or production is running including the balance tank.

b) Open the cover:
   - Unscrew the knob.
   - Swing the swing bolt to release the bracket.
   - Swing the bracket with the cover over so that the seal is accessible.

c) Unscrew the sprayball (6) from the tube and remove it.

d) Refit the new sprayball (6) and tighten firmly.

e) Assemble in reverse order.

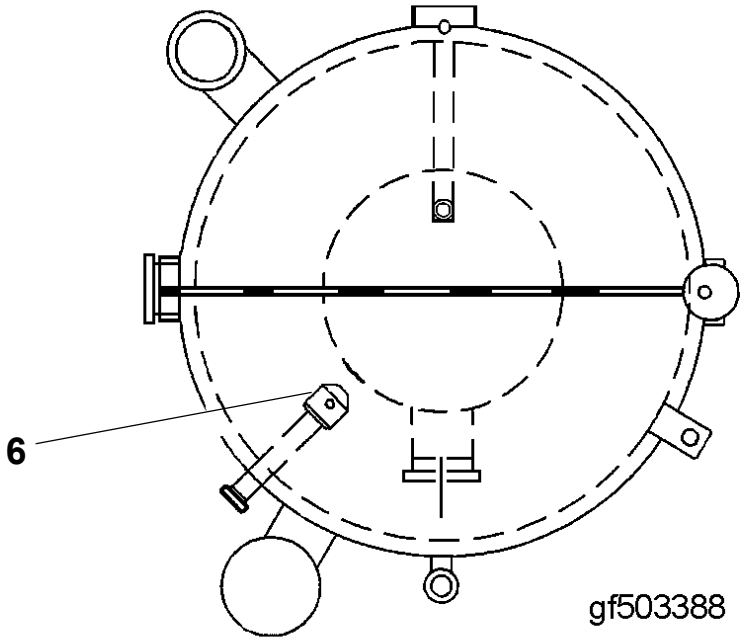

2.2tf501591.en

6 Sprayball

(Cont'd)

(Cont'd)

Changing sprayball if mounted with a flange

Note! Only skilled welding personnel is allowed to change a welded sprayball.

a) Make sure no cleaning or production is running including the balance tank.

b) Unscrew the bolts (5) and release the cleaning device (1).

c) Inspect the cleaning device and, if needed, cut the sprayball (2) from the CIP pipe (3).

d) Weld a new sprayball onto the CIP pipe.

e) Change the O-ring (4).

f) Reassemble in reverse order.

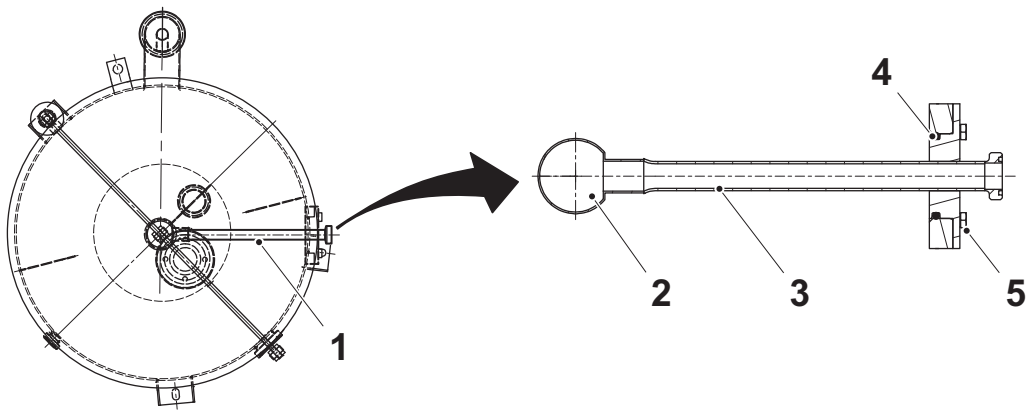

2.2tf501591.en

1 Cleaning device
2 Sprayball
3 CIP pipe
4 O-ring
5 Bolt

Spare Parts

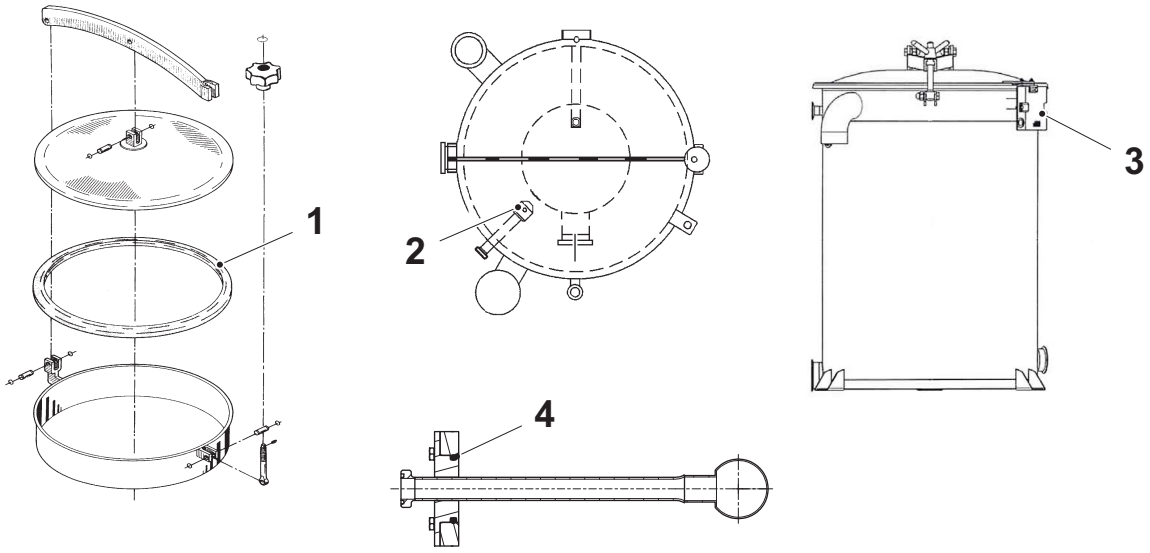

Note! The design of the tank can vary slightly between different BTD-200 models.

Component article No.	Spare part Article No.	Description	Pos.	Qty.
6-31542-1464-3 6-31542-1464-4	6-9613-4377-36	Gasket, EPDM, Ø 454 mm	1	1
6-31542-1491-1 6-31542-1495-1 6-31542-1582-1	6-9612-51-2801	Gasket, NBR, Ø 600 mm	1	1
6-31542-0805-1 6-31542-0805-2	6-9612-51-2802	Gasket, NBR, Ø 620 mm	1	1

2.2tf501592.en

6-31542-0944-1 6-31542-0944-2 6-31542-1057-1 6-31542-1057-2 6-31542-1072-1 6-31542-1099-1 6-31542-1100-1 6-31542-1101-1 6-31542-1101-2 6-31542-1101-3 6-31542-1102-1 6-31542-1102-2 6-31542-1102-3 6-31542-1102-4 6-31542-1246-1 6-31542-1294-1 6-31542-1284-1 6-31542-1284-2 6-31542-1412-1 6-31542-1412-2 6-31542-1412-3 6-31542-1412-4 6-31542-1510-1 6-31542-1523-1 6-31542-1523-2 6-31542-1523-3 6-31542-1523-4 6-31542-1571-1	6-9613-43-7756	Gasket, EPDM, Ø 620 mm	1	1
6-31542-1571-1	6-260190-70	O-ring, EPDM	4	1

2.2tf501592.en

6-31542-0805-1 6-31542-0805-2 6-31542-0944-1 6-31542-0944-2 6-31542-1057-1 6-31542-1057-2 6-31542-1099-1 6-31542-1100-1 6-31542-1101-1 6-31542-1101-2 6-31542-1101-3 6-31542-1102-1 6-31542-1102-2 6-31542-1102-3 6-31542-1102-4 6-31542-1412-1 6-31542-1412-2 6-31542-1412-3 6-31542-1412-4 6-31542-1523-1 6-31542-1523-2 6-31542-1523-3 6-31542-1523-4 6-34620-0020-1	6-32522-1092-1	Sprayball	2	1
6-31542-1491-1 6-31542-1495-1 6-31542-1571-1 6-31542-1582-1	6-9611-71-0871			
6-31542-1246-1 6-31542-1294-1 6-31542-1284-1 6-31542-1284-2 6-31542-1510-1	6-9611-71-0875			
6-31542-1464-3 6-31542-1464-4	6-32525-0346-1			
90519-8741	90511-0027			
90519-8741	90511-0919	Safety interlock switch	3	1

2.2tf501592.en

6-31542-0805-1 6-31542-0805-2 6-31542-0944-1 6-31542-0944-2 6-31542-1057-1 6-31542-1057-2 6-31542-1072-1	6-31801-9514-1	Gas spring (Optional*)	-	1
6-31542-1099-1 6-31542-1100-1 6-31542-1101-1 6-31542-1101-2 6-31542-1101-3 6-31542-1102-1 6-31542-1102-2 6-31542-1102-3 6-31542-1102-4 6-31542-1246-1 6-31542-1284-1 6-31542-1294-1 6-31542-1412-1 6-31542-1412-2 6-31542-1412-3 6-31542-1412-4 6-34620-0020-1 6-31542-1491-1 6-31542-1495-1 6-31542-1510-1 6-31542-1523-1 6-31542-1523-2 6-31542-1523-3 6-31542-1523-4 6-31542-1571-1 6-31542-1582-1	90503-7800	Gas spring		

* Gas spring not part of tank but fastened in tank and frame.

2.2tf501592.en

Tetra Pak

Maintenance & Spare Parts

Flash Vessel

(Tetra Pak)
Type S

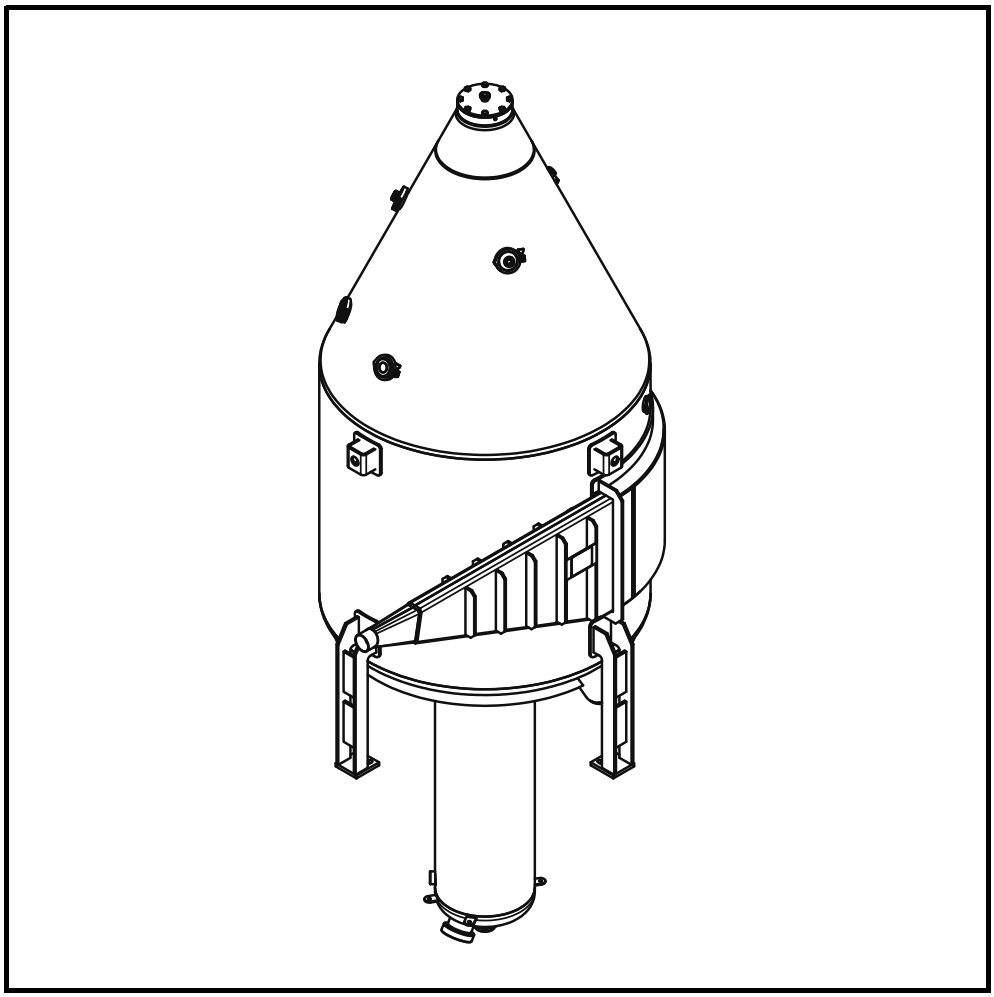

1.0 1226601-0101.fro

Tetra Pak

Doc No. 1226601-0101

Flash Vessel

Type S

Article No.	Type	Pressure vessel code	Material	Connection
6-32423-1719-1	S9L	PED	EN1.4301	SMS/Clamp
6-32423-1385-1	S9H	PED	EN1.4301	SMS/Clamp
6-32423-1573-1	S16	PED	EN1.4301	SMS/Clamp
6-32423-1574-1	S30	PED	EN1.4301	SMS/Clamp
6-32423-1720-1	S9L	PED	EN1.4301	DIN/Clamp
6-32423-1576-1	S9H	PED	EN1.4301	DIN/Clamp
6-32423-1577-1	S16	PED	EN1.4301	DIN/Clamp
6-32423-1578-1	S30	PED	EN1.4301	DIN/Clamp
6-32423-1721-1	S9L	ASME	EN1.4301	Clamp/Clamp
6-32423-1580-1	S9H	ASME	EN1.4301	Clamp/Clamp
6-32423-1581-1	S16	ASME	EN1.4301	Clamp/Clamp
6-32423-1582-1	S30	ASME	EN1.4301	Clamp/Clamp
6-32423-1533-1	S16	PED	EN1.4404	DIN/Clamp
6-32423-1827-1	S9L	ASME	EN1.4301	Clamp/Clamp
6-32423-1828-1	S9H	ASME	EN1.4301	Clamp/Clamp
6-32423-1829-1	S16	ASME	EN1.4301	Clamp/Clamp
6-32423-1830-1	S30	ASME	EN1.4301	Clamp/Clamp

1.0 1226601-0101.fro

Version 07 Issue 2014-02

Doc No. 1226601-0101

Tetra Pak

Tetra Pak Processing Systems AB

Table of contents

Maintenance 1

Sight glass 1

Change sight glass and gasket 1

Cleaning device 2

Change cleaning device and gasket 2

Spray condenser BTD 3

Change O-ring 3

Spray pipe 6

Change O-rings 6

Inner pipe 8

Change O-rings 8

Top flange 18

Change flange gaskets 18

Spare parts 20

Sight glass 20

Condenser pipe 21

Spray pipe 22

Inner pipe 23

Top flange 24

Cleaning device 25

This page intentionally left blank

Maintenance

Recommendation: Change O-ring annually or if damaged, after inspection.

Caution! **Before servicing the vessel:**
- Allow the vessel to cool down and adjust to atmospheric pressure!
- Inform relevant personnel about the work you intend to do!

Sight glass

WARNING! **Risk of injury!**
Depressurize and empty all lines to the flash vessel before loosening any of the couplings!

Change sight glass and gasket

a) Loosen the clamp (1).

b) Remove the sight glass (2).

c) Change the gasket (3).

2.2tf5075O1.en

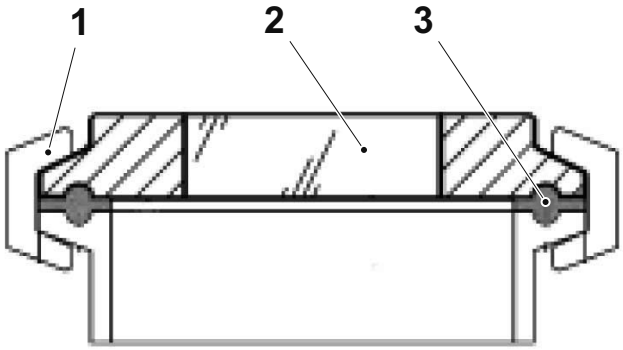

1 Clamp
2 Sight glass
3 Gasket

d) Reassemble in reverse order.

Cleaning device

WARNING!

Risk of injury!
Depressurize and empty all lines to the flash vessel before loosening any of the couplings!

Change cleaning device and gasket

a) Loosen the clamp (1).

b) Remove the cleaning device (2).

c) Change the gasket (3).

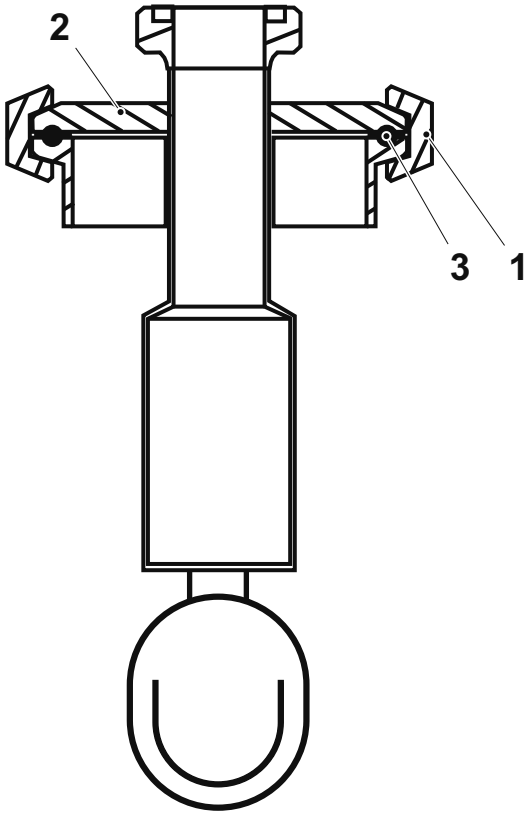

1 Clamp
2 Cleaning device
3 Gasket

2.2tf5075O1.en

d) Reassemble in reverse order.

Spray condenser BTD

Recommendation: Change O-ring annually or if damaged, after inspection.

WARNING!

Risk of injury!
Depressurize and empty all lines to the flash vessel before loosening any of the couplings!

WARNING!

Risk of injury!
Due to safety reasons, it is recommended that at least two persons perform the operation below.

Change O-ring

Service tools for BTD spray condenser				
Pos. No.	Material No.	Qty.	Denomination	Type
1	90513-5591	1	Trolley	For S-Vessel spray condenser
2	6-34144-7693-1	1	Support foot for BTD spray condenser	S30 / S16 / S9
3	6-221041-01	4	Hexagon head screw	DIN 933 M10x30 A4-70
4	6-221803-29	4	Hexagon nut	DIN394 M10 A4-70

2.2tf5075O1.en

a) Disassemble all equipment connected to the BTD condenser, and make space for the trolley (1).

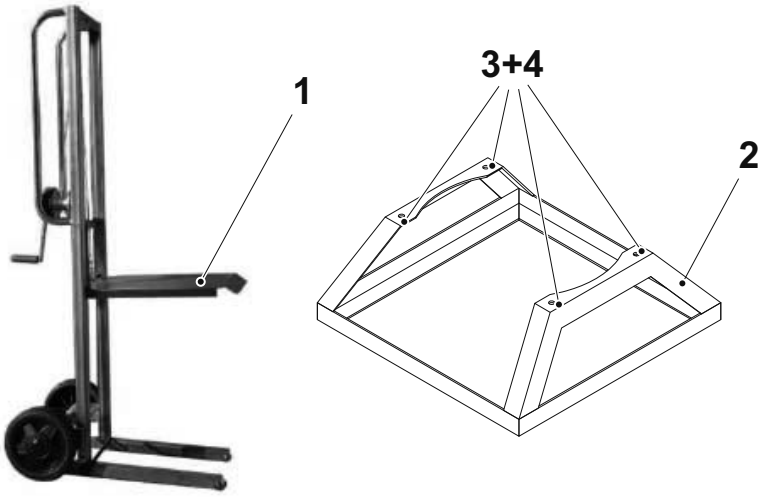

1 Trolley
2 Support foot
3 Hexagon head screw
4 Hexagon nut

(Cont'd)

(Cont'd)

b) Use the trolley (1), to easier mount the support foot (2) on the BTD condenser (5) with the bolts and nuts, see table page 3.



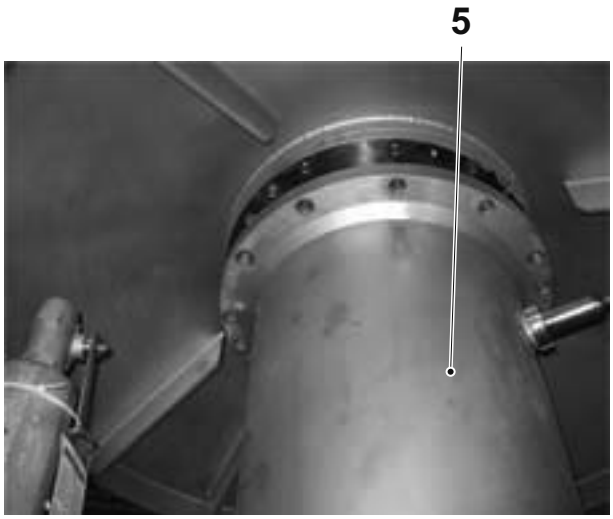

c) Lift the forks so much that no play exists between the support feet and the BTD condenser.

d) Remove all twelve bolts (6) and the two connections for the steam barrier in the flange. Remove the two levelguards.

2.2tf507501.en

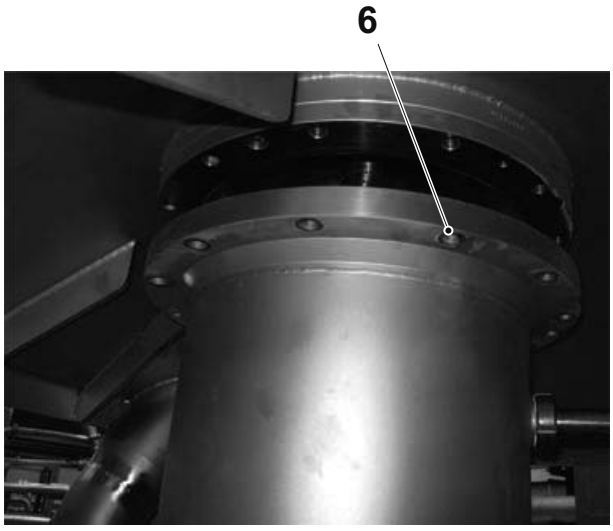

(Cont'd)

(Cont'd)

e) Lower the trolley carefully.

f) Change the O-ring (8).

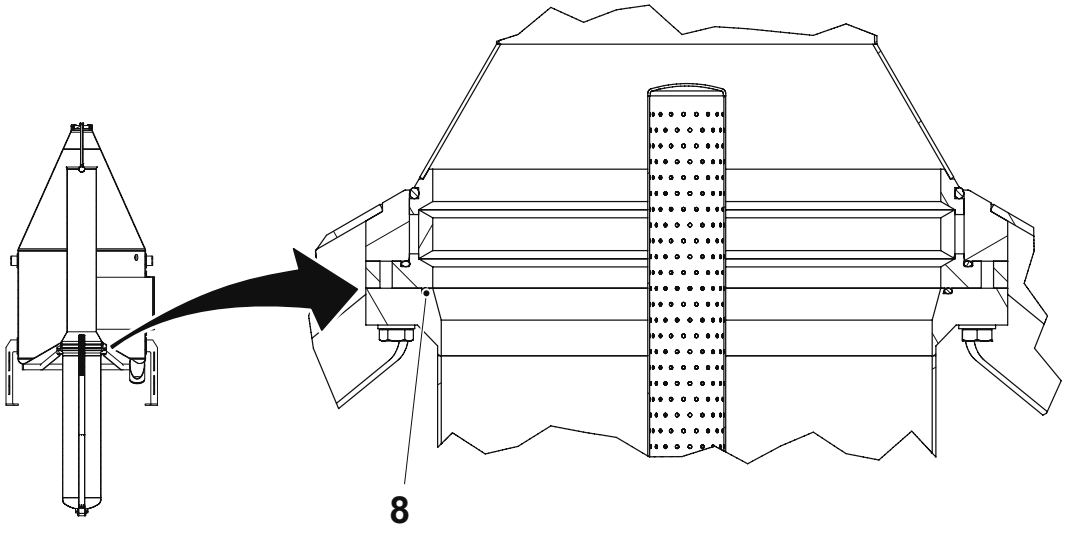

g) Assemble in reverse order.

h) Apply thread sealing on the thread to the connection of the steam barrier.

2.2tf5075O1.en

Spray pipe

Recommendation: Change O-ring annually or if damaged, after inspection.

Change O-rings

a) Follow steps a) - e) in Change O-ring on page 3.

b) Remove the BTD condenser from the module.

c) Lay down the BTD condenser on a piece of wood (1).

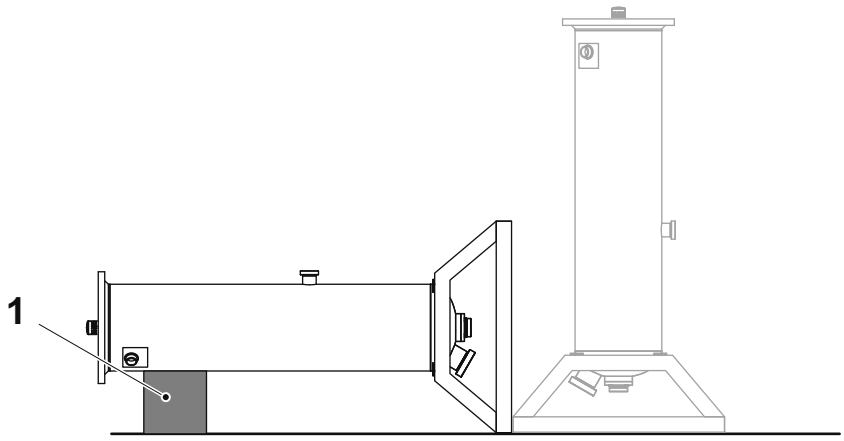

2.2tf5075O1.en

d) Loosen the four screws (2).

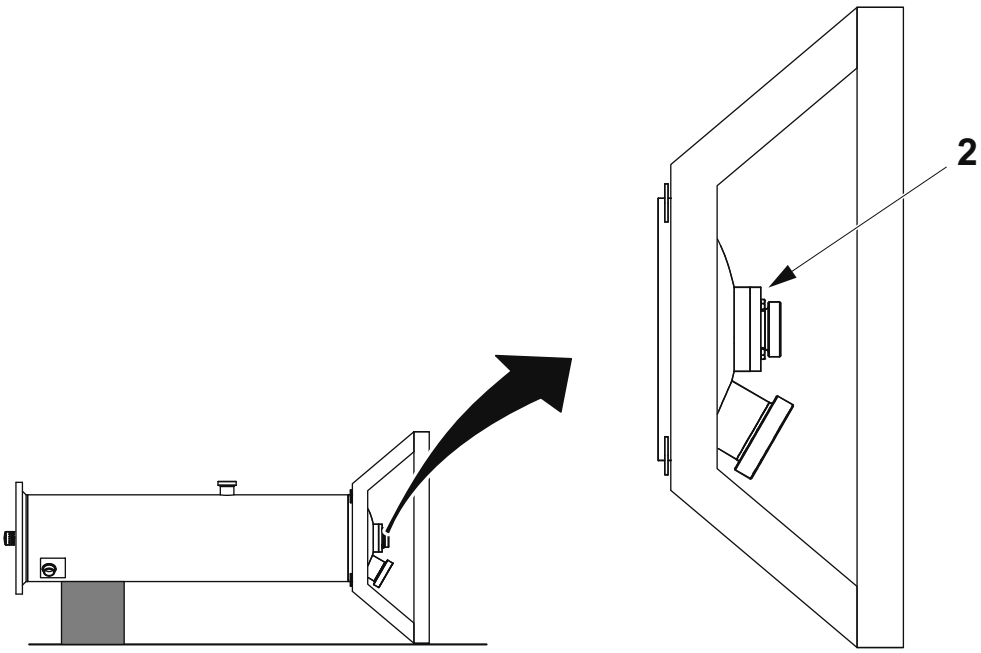

(Cont'd)

(Cont'd)

e) Pull out the spray pipe (3).

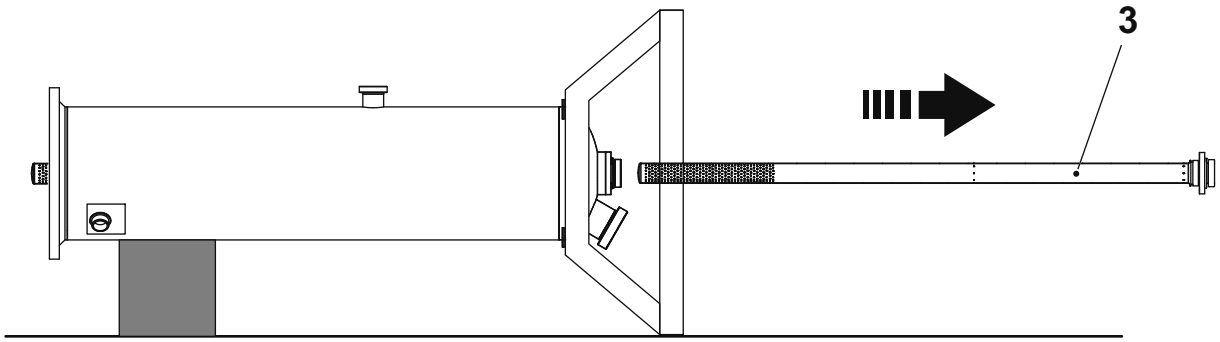

f) Change O-rings (4), and grease them.

Note! Make sure that oil/grease which may come into contact with food is food-grade (FDA H1).

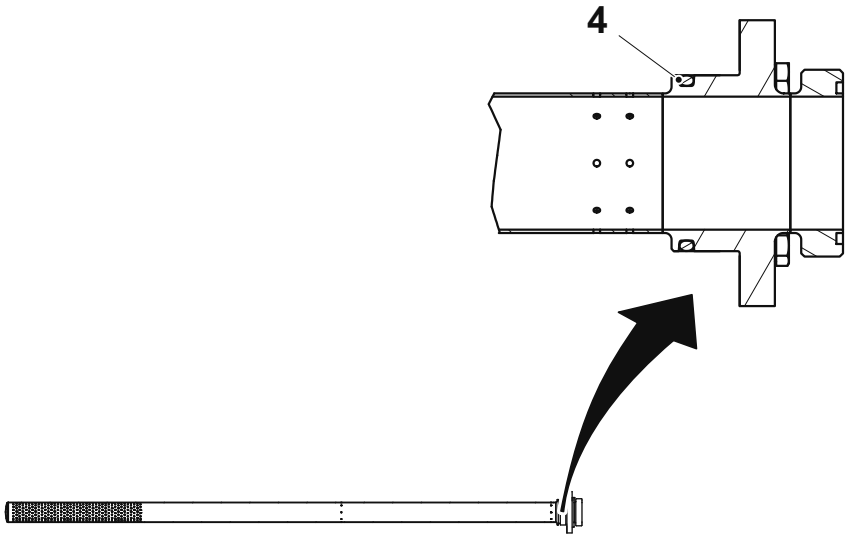

2.2tf5075O1.en

g) Assemble in reverse order.

Inner pipe

Recommendation: Change O-ring annually or if damaged, after inspection.

Change O-rings

Service tools for S9 vessel				
Pos. No.	Material No.	Qty.	Denomination	Type
5	6-32423-1432-1	3	Screw kit	M16x245
6	90287-0359	2	Screw	M6S ISO 4017 M10x100 A4 80
-	6-34144-7693-1	1	Support S-Vessel	For S9/S16/S30
-	6-221041-01	4	Hexagon head screw	ISO 4017/DIN 933 M10x30 A4-70
9	6-221803-29	4	Hexagon nut	DIN934 M10 A4-70
17	6-34144-7995-1	1	Service table	For S9-vessel spray condenser DHM S9 D/ H 450/900 mm
1	90513-5591	1	Trolley	For S-vessel spray condenser

(Cont'd)

2.2tf5075O1.en

(Cont'd)

Service tools for S16/S30 vessels				
Pos. No.	Material No.	Qty.	Denomination	Type
5	6-32423-1432-1	3	Screw kit	M16x245
6	90287-0359	2	Screw	M6S ISO 4017 M10x100 A4 80
-	6-34144-7693-1	1	Support S-Vessel	For S9/S16/S30
-	6-221041-01	4	Hexagon head screw	ISO 4017/DIN 933 M10x30 A4-70
9	6-221803-29	4	Hexagon nut	DIN934 M10 A4-70
13	6-34144-7968-1	1	Bracket	For rack & pinion jack
16	6-34144-7969-1	1	Shelf	For rack & pinion jack
14	6-34144-7970-1	1	Attachment plate	For rack & pinion jack
15	6-34144-7971-1	1	Lower support	For rack & pinion jack
12	6-34144-7974-1	1	Upper support	For rack & pinion jack
7	6-221041-09	1	Hexagon head bolt	ISO 4014/DIN 931 M10x70 A4-70
3	6-2-210463-07	1	Hexagon head bolt	ISO 4014/DIN 931 M16x60 A4-70
10	6-221041-20	4	Hexagon head screw	ISO 4017/DIN 933 M10x25 A4-70
9	6-221803-29	5	Hexagon nut	DIN934 M10 A4-70
8	6-223101-34	5	Washer	DIN125 10x18 A4
-	6-223101-37	1	Washer	EN ISO 7089 16 200HV A4
1	90513-5591	1	Trolley	For S-vessel spray condenser
2	90513-5592	1	Rack and pinion jack	For S-vessel spray condenser

2.2tf5075O1.en

(Cont'd)

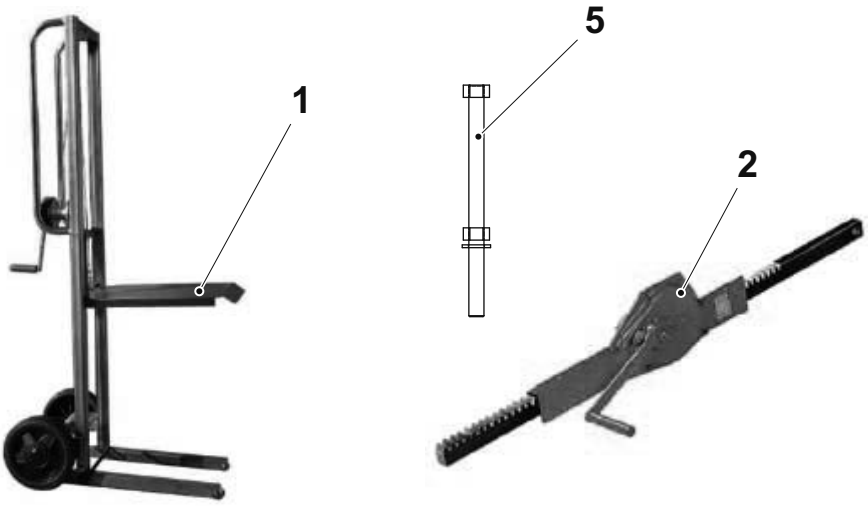

Note! Item a) - f) is only valid for S9, S16 and S30 vessel, page 10-12.

a) Disassemble the BTD condenser, described in Change O-ring on page 3.

(Cont'd)

2.2tf5075O1.en

(Cont'd)

b) Secure the inner pipe (18) with the screws (5), equally distributed in the flange (19).

Note! Screw the screws (5) only by hand-power and make sure that they are screwed the whole way up.

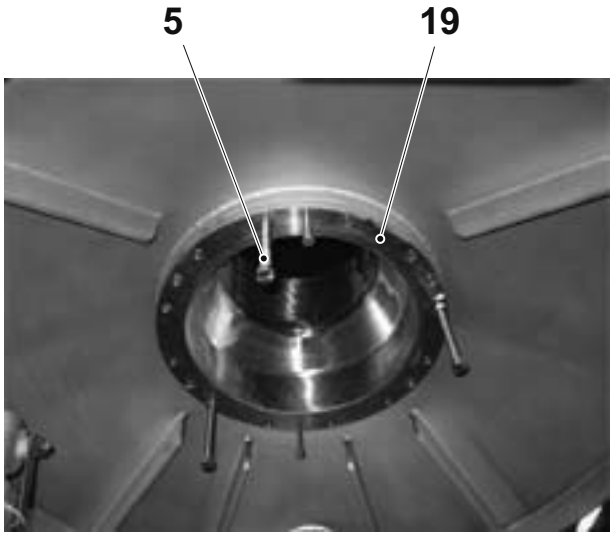

2.2tf5075O1.en

c) Screw the nuts (20) up to the flange (19).

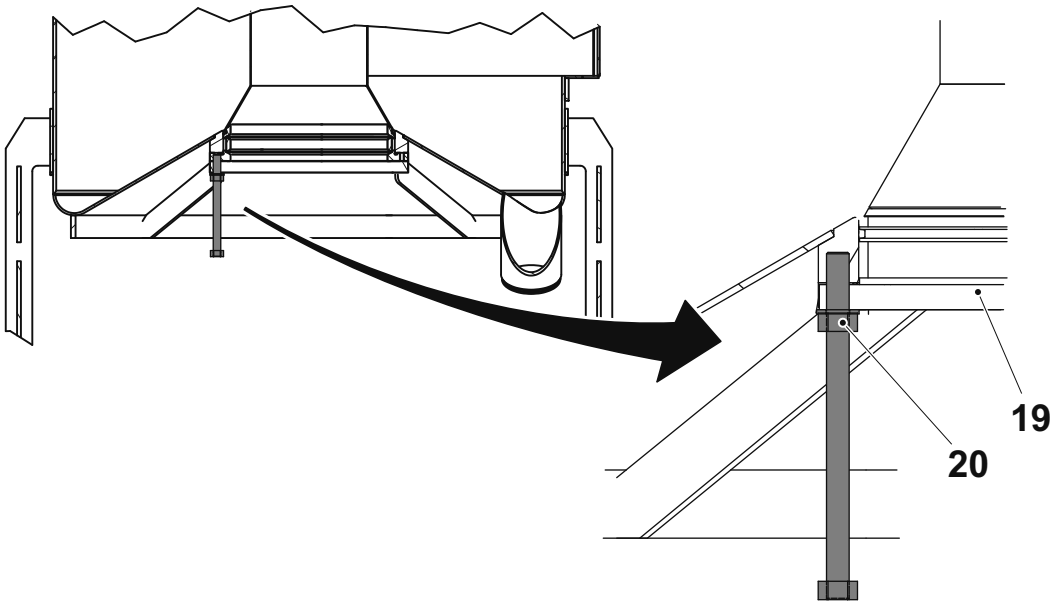

(Cont'd)

(Cont'd)

d) Remove the two Allen screws (21).

e) Screw the screws (6) in the threaded hole on the flange (19).

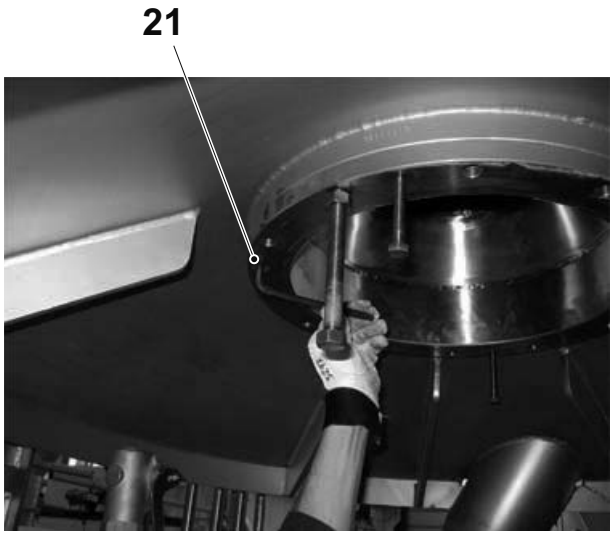

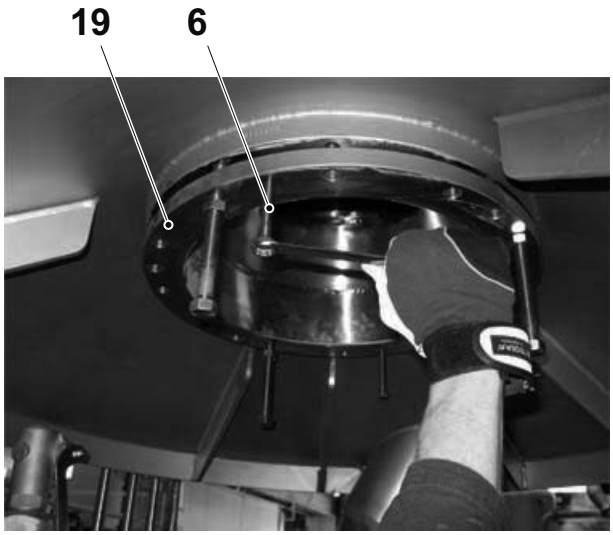

f) Press down the inner pipe (18) with the screws (6) and follow the movement (almost simultaneously) with the three nuts (20) on the screws (5).

Caution! Make sure that the screws (5) are not rotating, only the nuts (20). The inner pipe (18) is now hanging on these.

(Cont'd)

2.2tf507501.en

(Cont'd)

Note! Item g) - p) is only valid for S16 and S30 vessel, page 13-16.

g) Assemble upper support (12) to the vessel flange (19) with hexagon bolt (3) and washer (4).

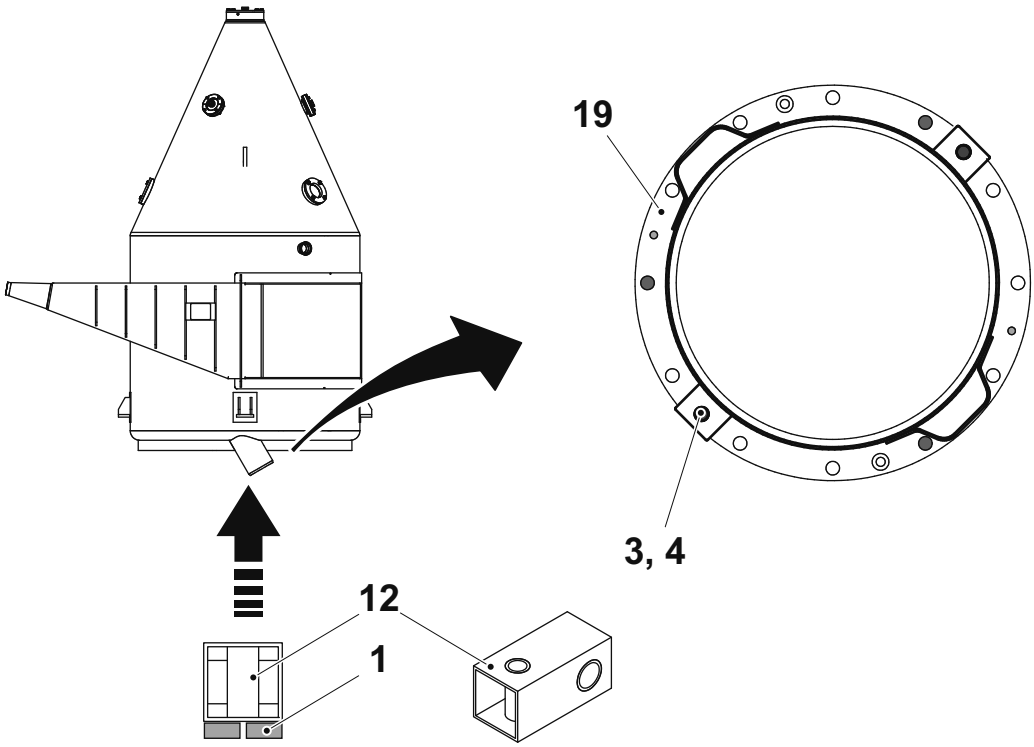

2.2tf5075O1.en

h) Connect rack & pinion jack (2) to the upper support (12) with hexagon bolt (7) and washer (8) and hexagon nut (9).

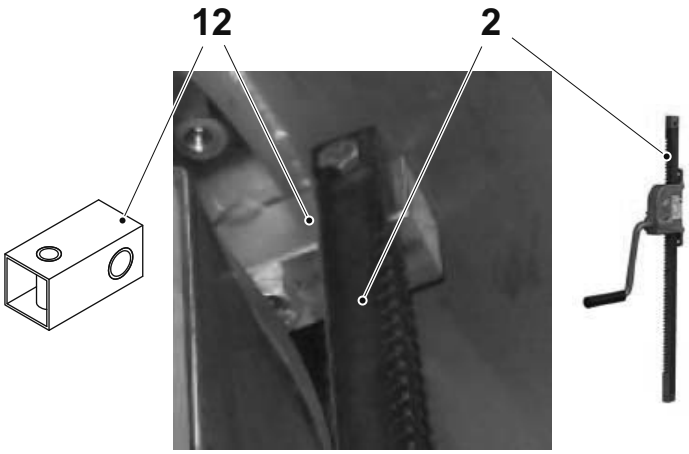

(Cont'd)

(Cont'd)

i) Assemble the bracket (13) to the attachment plate (14) at the frame with hexagon (10) bolt and washer (11) and hexagon nut (9).

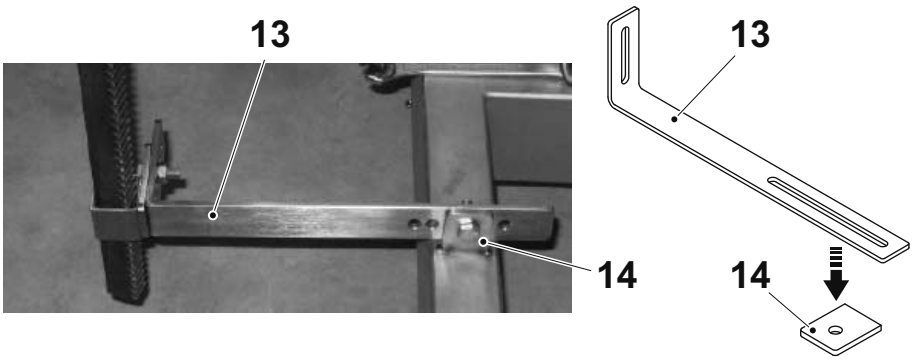

j) Slide on the lower support (15) to the rack and pinion jack (2) and then assemble it to the bracket (13) with hexagon bolt (10) and washer (11) and hexagon nut (9).

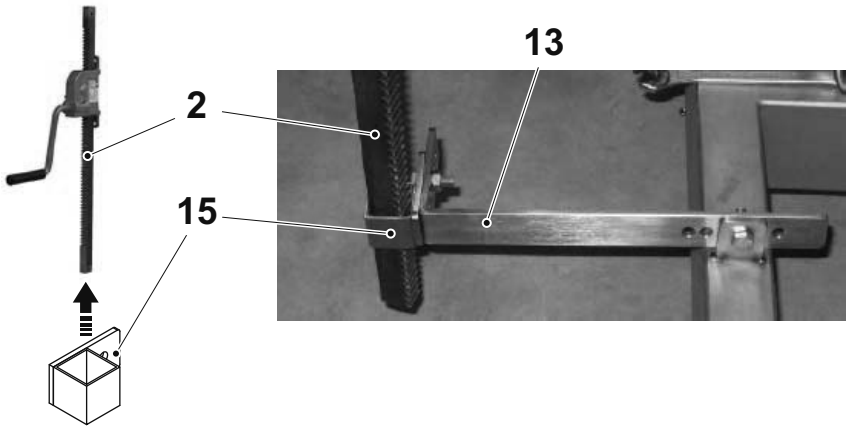

2.2tf507501.en

(Cont'd)

(Cont'd)

k) Assemble the shelf (16) to the rack and pinion jack (2) with hexagon bolt (10) and washer (11) and hexagon nut (9).

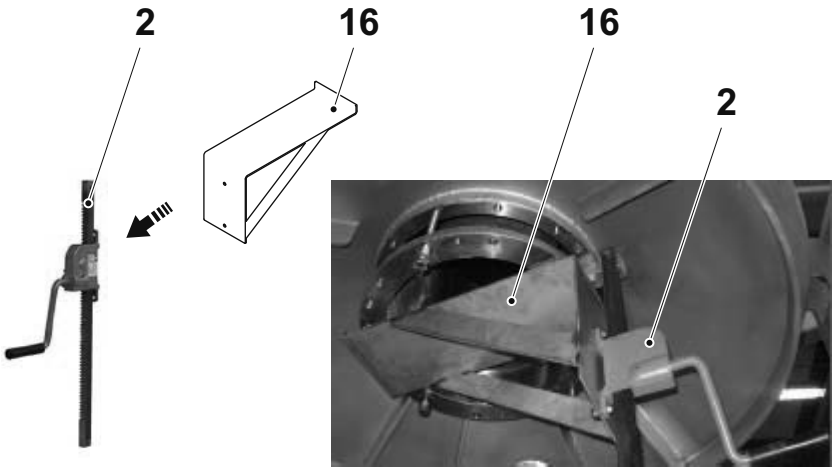

l) Adjust the height of the shelf (16) with the rack and pinion jack (2) so much that the whole weight of the inner pipe (18) rests on the shelf (16).

m) Unscrew the three screws (5).

2.2tf5075O1.en

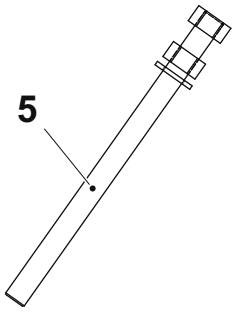

n) Lower the inner pipe (18) carefully with the rack and pinion jack (2).

o) Change the O-rings and grease them.

Note! Make sure that oil/grease which may come into contact with food is food-grade (FDA H1).

(Cont'd)

(Cont'd)

p) If inspection of vessel inside;
   – Lower the inner pipe (18) to lowest position.
   – Use trolley (1) to transport the inner pipe (18) outside the module.

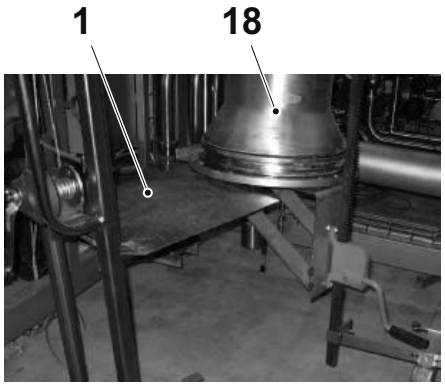

Note! Item a) - e) is only valid for S9 vessel, page 16-17.

a) Place the support table (17) on the trolley (1) and adjust the height of the trolley so much that the whole weight of the inner pipe (18) rests on the support table.

2.2tf507501.en

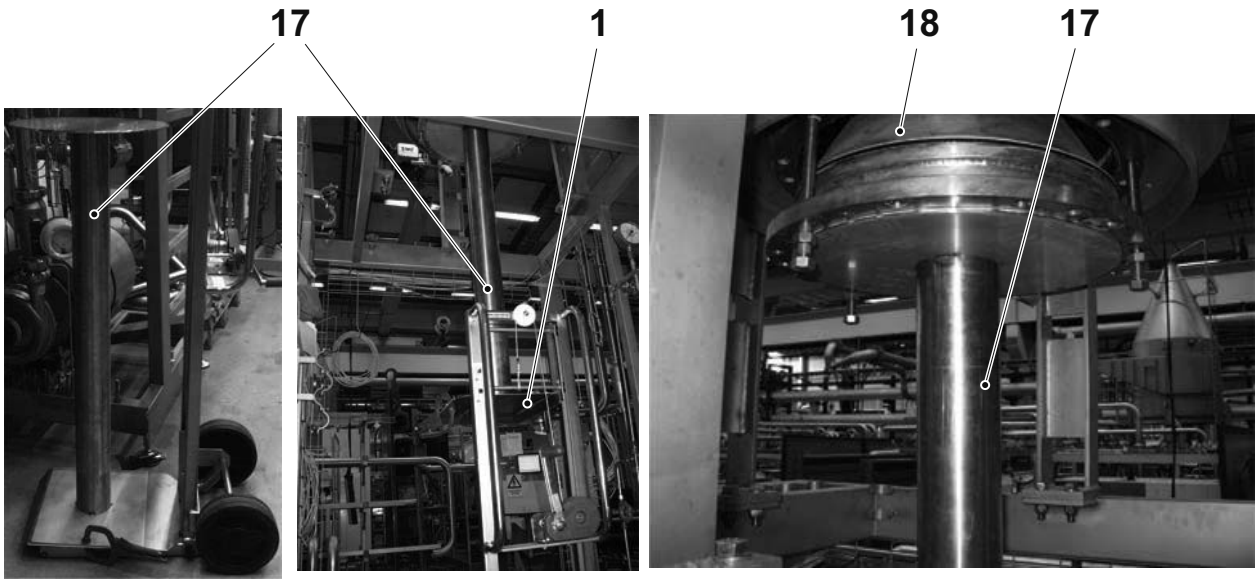

(Cont'd)

(Cont'd)

b) Unscrew the three screws (5).

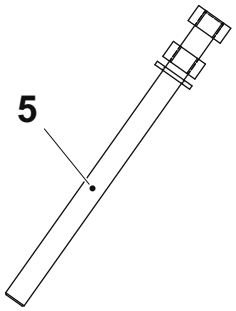

c) Lower the inner pipe (18) carefully with the trolley (1).

d) Change the O-rings and grease them.

Note! Make sure that oil/grease which may come into contact with food is food-grade (FDA H1).

e) If inspection of vessel inside;

- Lower the inner pipe (18) to lowest position.
- Use trolley (1) to transport the inner pipe (18) outside the module.

2.2tf5075O1.en

Top flange

Recommendation: Change flange gaskets annually or if damaged, after inspection.

WARNING!

Risk of injury!
Depressurize and empty all lines to the flash vessel before loosening any of the couplings!
Allow the vessel to cool down.

Change flange gaskets

a) Loosen the 8 screws (1)

b) Remove the cover (2)

c) Remove the upper gasket (3) and the lower gasket (4)

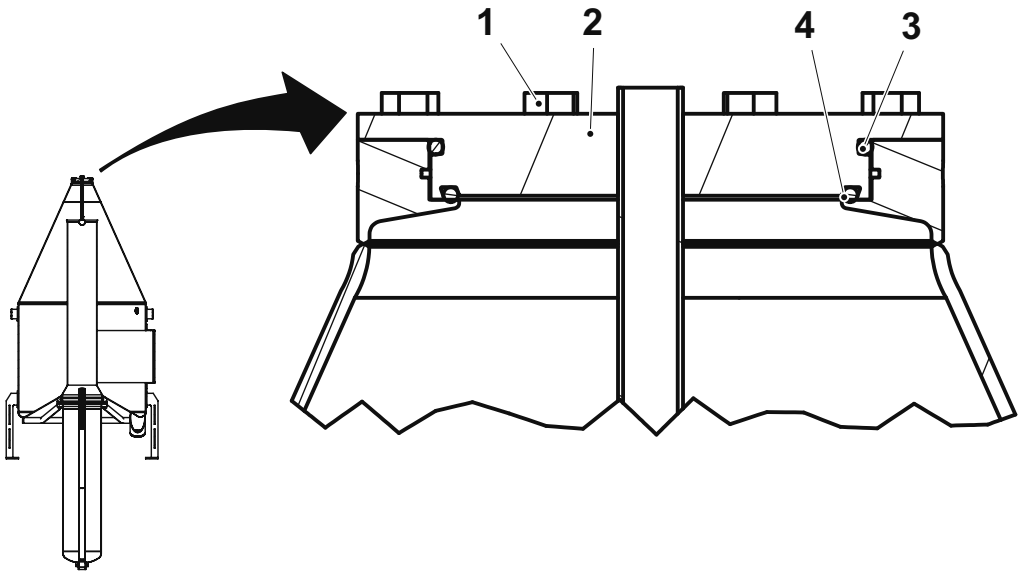

2.2tf507501.en

d) Assemble in reverse order.

This page intentionally left blank

Spare parts

Sight glass

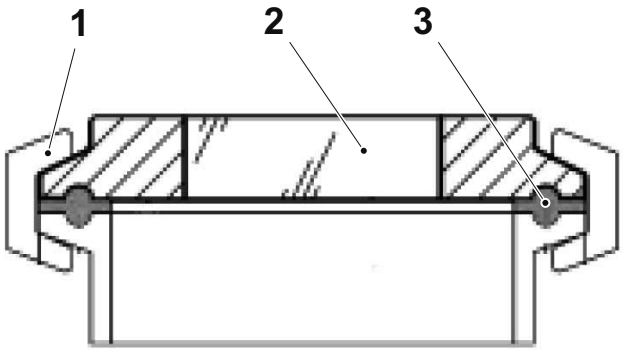

Component Article No	Spare parts Article No.	Description	Pos.	Qty
6-32423-1719-1 6-32423-1385-1 6-32423-1573-1 6-32423-1574-1 6-32423-1720-1 6-32423-1576-1 6-32423-1577-1 6-32423-1578-1 6-32423-1721-1 6-32423-1580-1 6-32423-1581-1 6-32423-1582-1 6-32423-1719-1 6-32423-1720-1 6-32423-1721-1	90510-5510	Clamp ring	1	1
	90503-7561	Sight glass	2	1
	6-9611-99-1362	Clamp seal ring 76 mm	3	1
6-32423-1827-1 6-32423-1828-1 6-32423-1829-1 6-32423-1830-1	90510-5510	Clamp ring	1	2
	90503-7561	Sight glass	2	2
	6-9611-99-1362	Clamp seal ring 76 mm	3	2

1.0tf507502.en

Condenser pipe

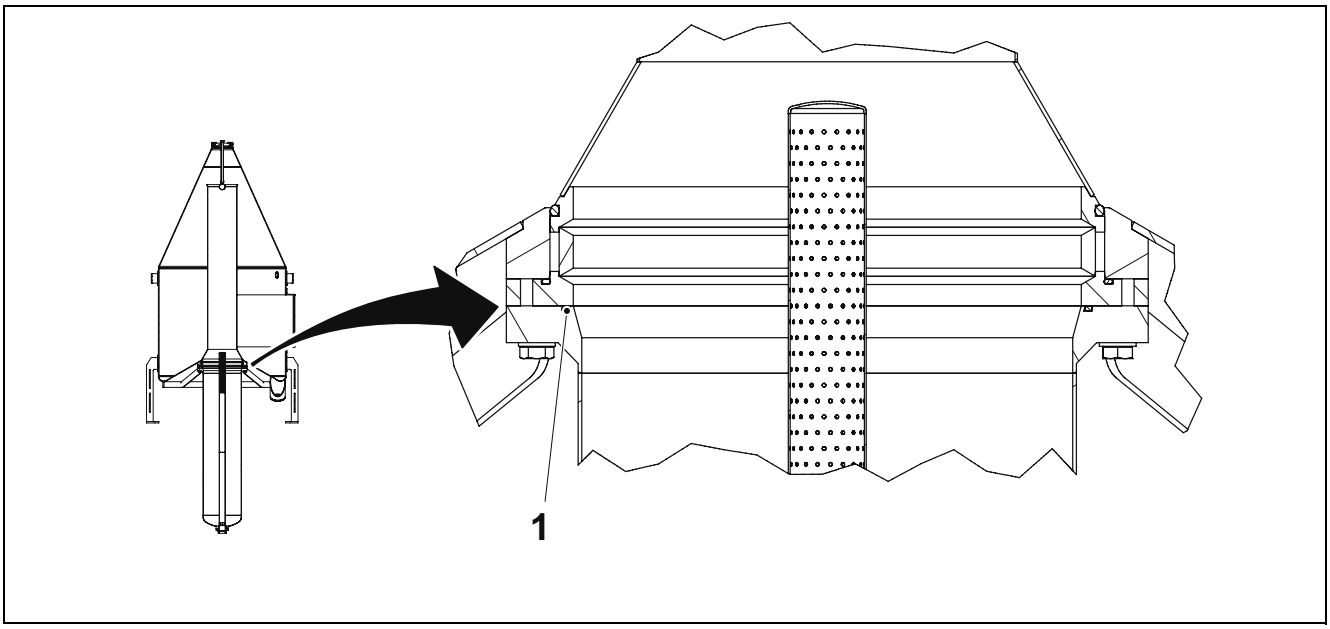

Component Article No	Spare parts Article No.	Description	Pos.	Qty
6-32423-1719-1 6-32423-1385-1 6-32423-1573-1 6-32423-1574-1 6-32423-1720-1 6-32423-1576-1 6-32423-1577-1 6-32423-1578-1 6-32423-1721-1 6-32423-1580-1 6-32423-1581-1 6-32423-1582-1 6-32423-1827-1 6-32423-1828-1 6-32423-1829-1 6-32423-1830-1	90503-3296	O-ring	1	1

1.0tf507502.en

Spray pipe

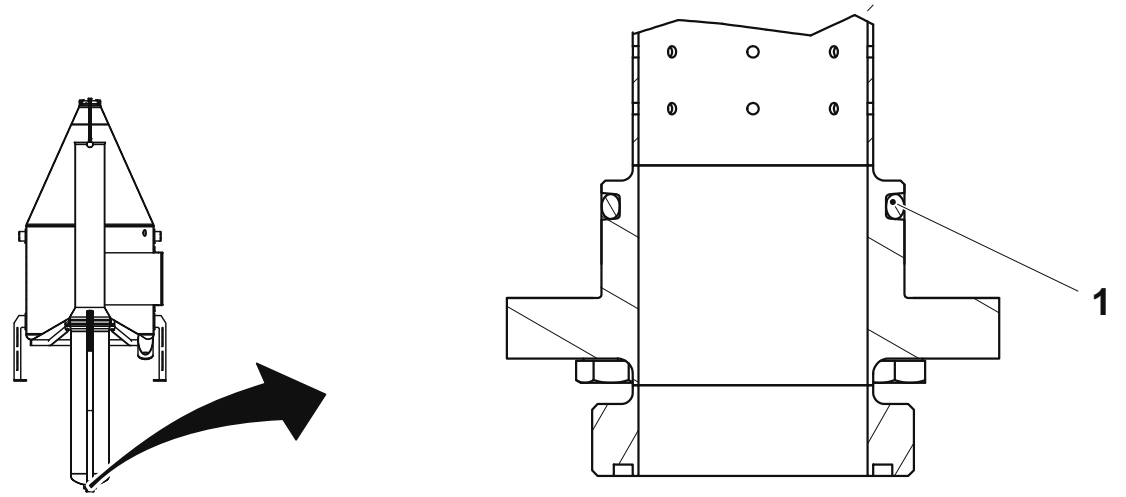

Component Article No	Spare parts Article No.	Description	Pos.	Qty
6-32423-1719-1 6-32423-1385-1 6-32423-1573-1 6-32423-1574-1 6-32423-1720-1 6-32423-1576-1 6-32423-1577-1 6-32423-1578-1 6-32423-1721-1 6-32423-1580-1 6-32423-1581-1 6-32423-1582-1 6-32423-1827-1 6-32423-1828-1 6-32423-1829-1 6-32423-1830-1	90503-3289	O-ring	1	1

1.0tf507502.en

Inner pipe

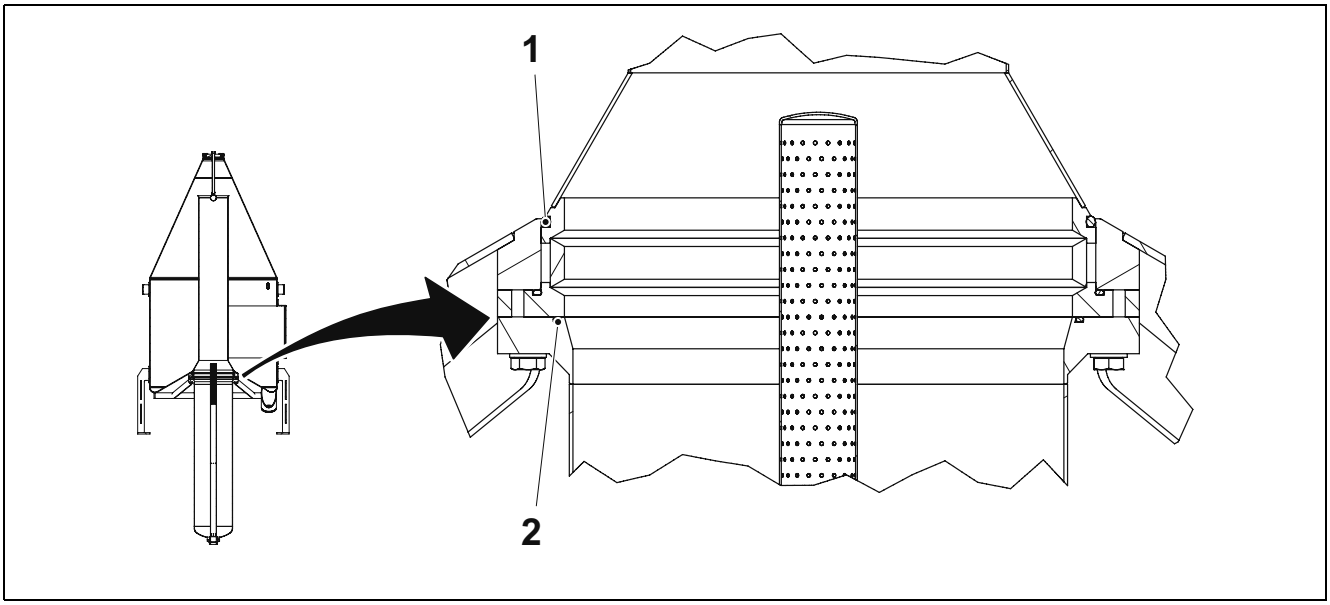

Component Article No	Spare parts Article No.	Description	Pos.	Qty
6-32423-1719-1 6-32423-1385-1 6-32423-1573-1 6-32423-1574-1 6-32423-1720-1 6-32423-1576-1 6-32423-1577-1 6-32423-1578-1 6-32423-1721-1 6-32423-1580-1 6-32423-1581-1 6-32423-1582-1 6-32423-1827-1 6-32423-1828-1 6-32423-1829-1 6-32423-1830-1	90503-3293	O-ring	1	1
	90503-3294	O-ring	2	1

1.0tf507502.en

Top flange

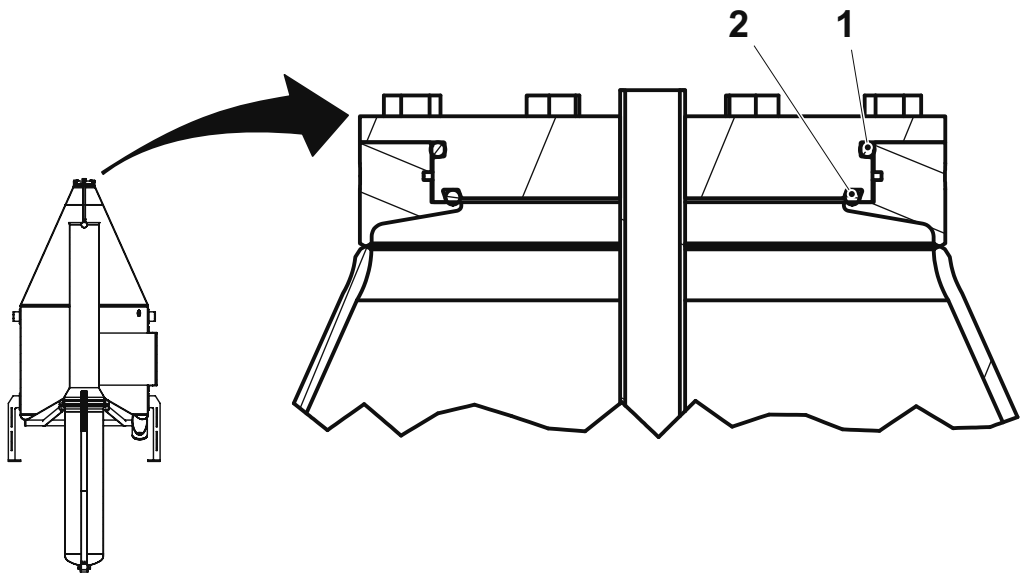

Component Article No	Spare parts Article No.	Description	Pos.	Qty
6-32423-1719-1	90503-3292	Upper O-ring	1	1
6-32423-1385-1 6-32423-1573-1 6-32423-1574-1 6-32423-1720-1 6-32423-1576-1 6-32423-1577-1 6-32423-1578-1 6-32423-1721-1 6-32423-1580-1 6-32423-1581-1 6-32423-1582-1 6-32423-1827-1 6-32423-1828-1 6-32423-1829-1 6-32423-1830-1	6-990200-08	Lower O-ring	2	1

1.0tf507502.en

Cleaning device

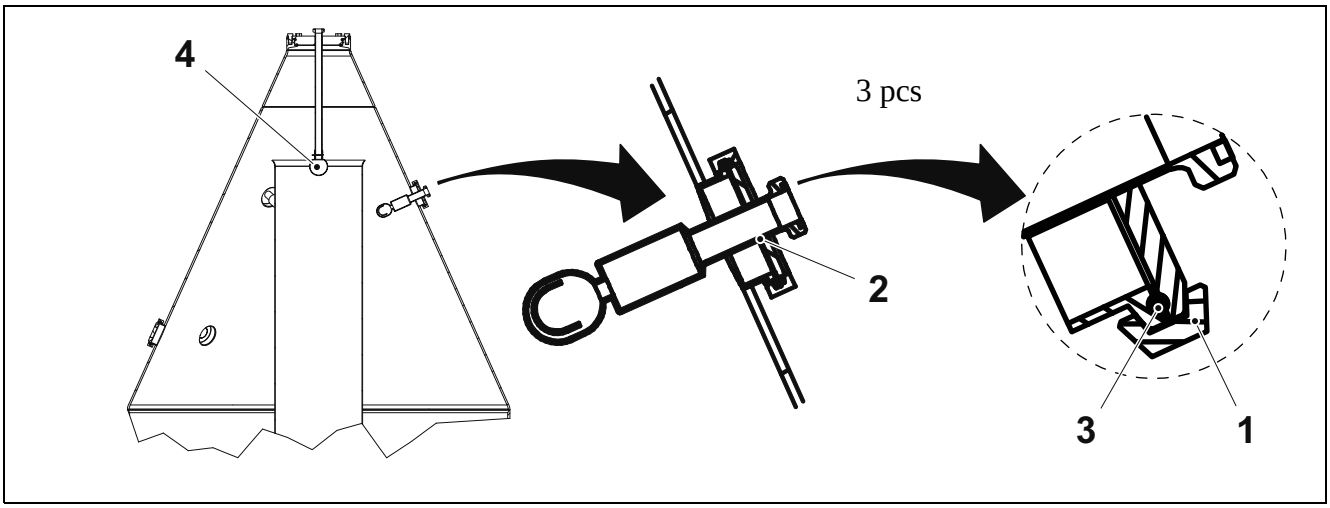

Component Article No	Spare parts Article No.	Description	Pos.	Qty
6-32423-1719-1 6-32423-1385-1 6-32423-1573-1 6-32423-1574-1 6-32423-1720-1 6-32423-1576-1 6-32423-1577-1 6-32423-1578-1 6-32423-1721-1 6-32423-1580-1 6-32423-1581-1 6-32423-1582-1	90510-5510	Clamp ring	1	3
	90503-6131	Spray ball Multimidget	2	3
	6-9611-99-1362	Clamp seal ring 76 mm	3	3
	6-9611-71-0855	Spray ball LKRK	4	1
6-32423-1827-1 6-32423-1828-1 6-32423-1829-1 6-32423-1830-1	90510-5510	Clamp ring	1	3
	6-9612-99-1773	Spray ball Multimidget	2	3
	6-9611-99-1362	Clamp seal ring 76 mm	3	3

1.0tf507502.en

Tetra Pak

Maintenance & Spare Parts

CIP Header Batch Tank

(Tetra Pak)

CIP HB version

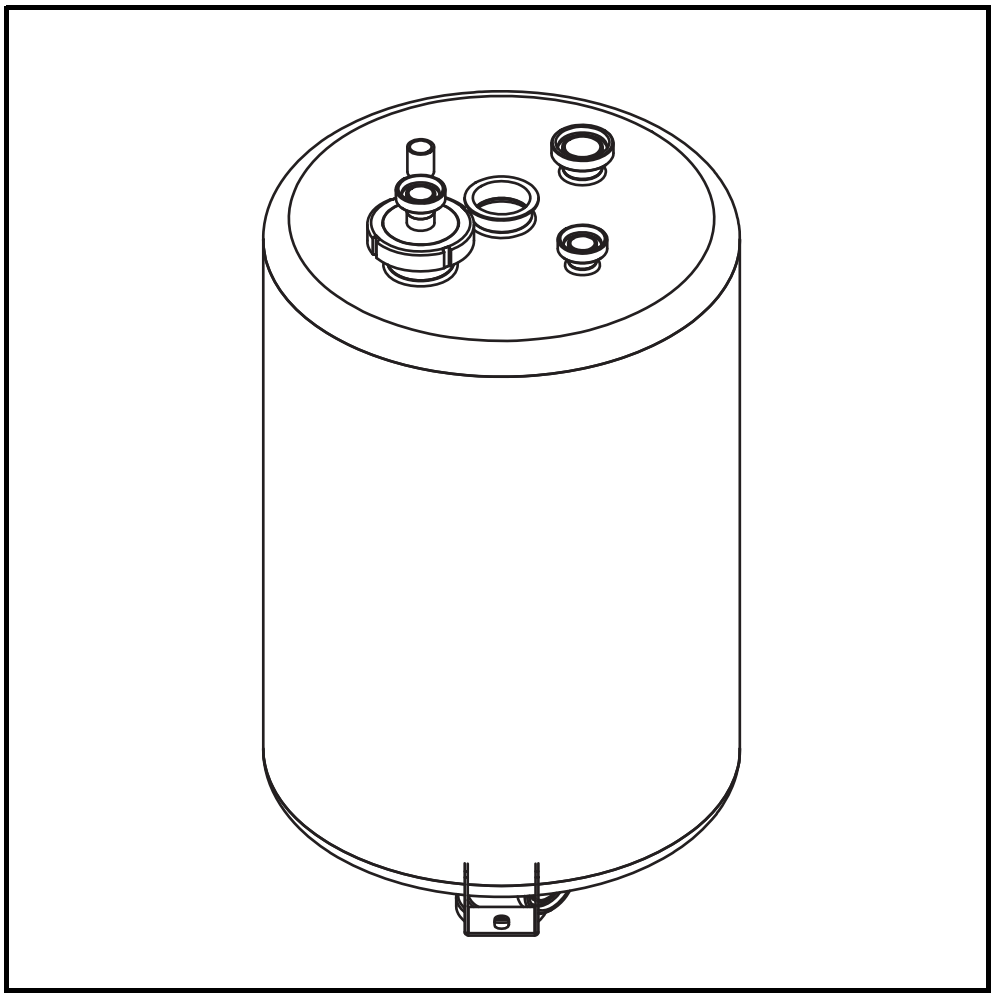

1.0 3281944-0101.fro

Tetra Pak

Doc No. 3281944-0101

CIP Header Batch Tank

CIP HB version

Article No.	Capacity (litre)	Manhole cover	Legs
6-31542-1301-1	210	No	No
6-31542-1302-1	210	No	No
6-31542-1328-1	125	No	No
6-31542-1329-1	125	No	No
6-31542-1487-1	125	No	No
6-31542-1563-1	125	No	No
6-31542-1604-1	125	No	No

1.0 3281944-0101.fro

Version 04 Issue 2016-06

Doc No. 3281944-0101

Tetra Pak

Tetra Pak Processing Systems AB

Table of contents

Function Description 1

Maintenance 2

Change Cleaning Device 2

Spare Parts 3

1.0 3281944-0101.TOC

This page intentionally left blank

Function Description

The CIP Header Batch Tank is used for measuring the amount of chemicals needed for correct dosing in the system. The tank is also needed as a water tank during phase change between water and product.

The CIP spray ball (9) is used for fill water into the CIP Header batch tank but also to secure that all chemical is flushed out from the tank.

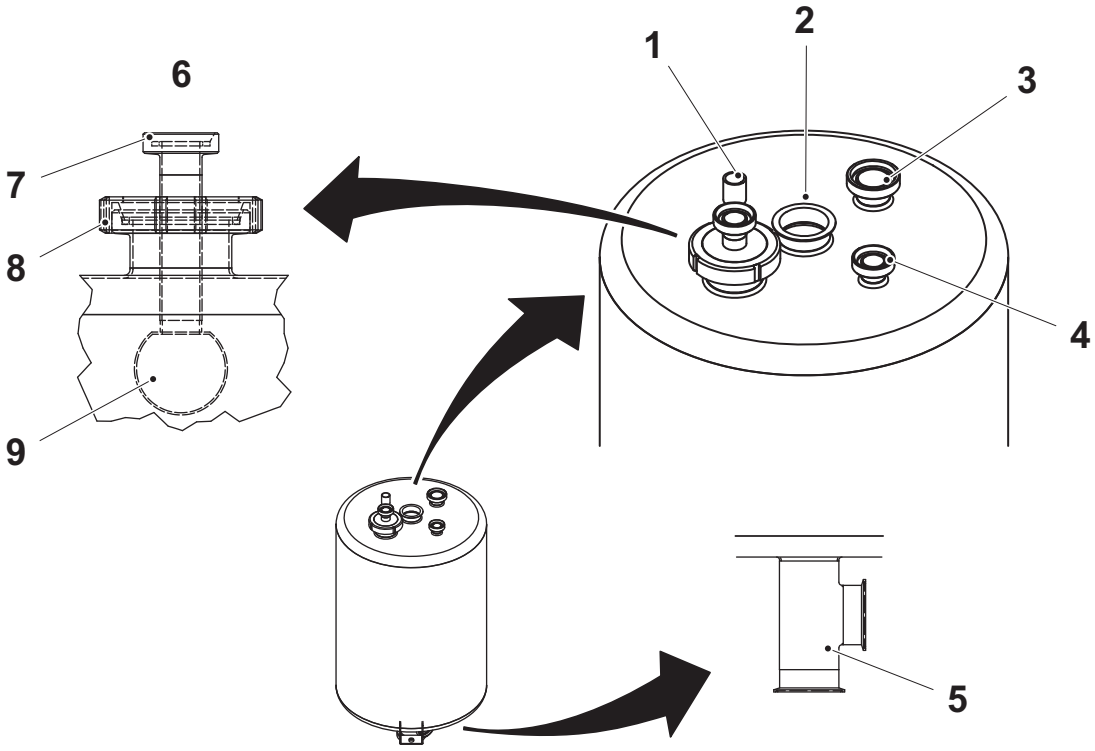

2.2tf508795.en

1 High-level switch connection
2 Level transmitter connection
3 Drain pipe connection
4 Caustic/acid inlet
5 Outlets
6 Cleaning device
7 Water inlet
8 Nut
9 Spray ball

Maintenance

WARNING!

Risk of burns!
Hot surfaces; always let the unit cool down to ambient temperature.

Risk of injury!
Liquid under pressure; always use protective goggles.

Risk of injury!
Make sure before dismantling, that the pipeline is drained and free from media.

Risk of corrosion!
The cleaning liquid in the system might be aggressive.

Change Cleaning Device

a) Release the cleaning device (6) from the CIP pipe (7).

b) Loosen the nut (8).

c) Change the cleaning device (6) together with the seal ring (10).

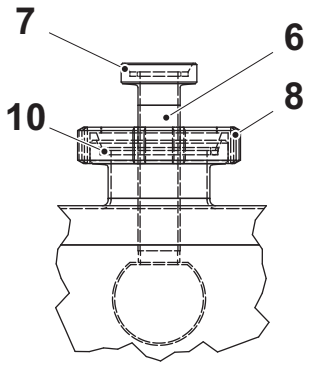

2.2tf508795.en

6 Cleaning device
7 CIP pipe
8 Nut
10 Seal ring

d) Reassemble in reverse order.

Spare Parts

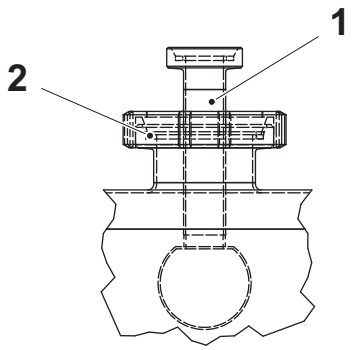

Component Article No.	Spare Part Article No.	Description	Pos.	Qty
6-31542-1302-1 6-31542-1328-1 6-31542-1329-1 6-31542-1487-1 6-31542-1563-1 6-31542-1604-1	6-9611-71-0871	Spray ball	1	1
6-31542-1301-1	6-9611-71-0875			
6-31542-1301-1 6-31542-1328-1 6-31542-1487-1	6-9611-99-1273	Seal ring DN65	2	1
6-31542-1302-1 6-31542-1329-1 6-31542-1563-1 6-31542-1604-1	6-31317-0380-3	Seal ring SMS76	2	1

2.2tf508796.en

Tetra Pak

Maintenance & Spare Parts

Steam trap
(Spirax Sarco)
FT14-10/14

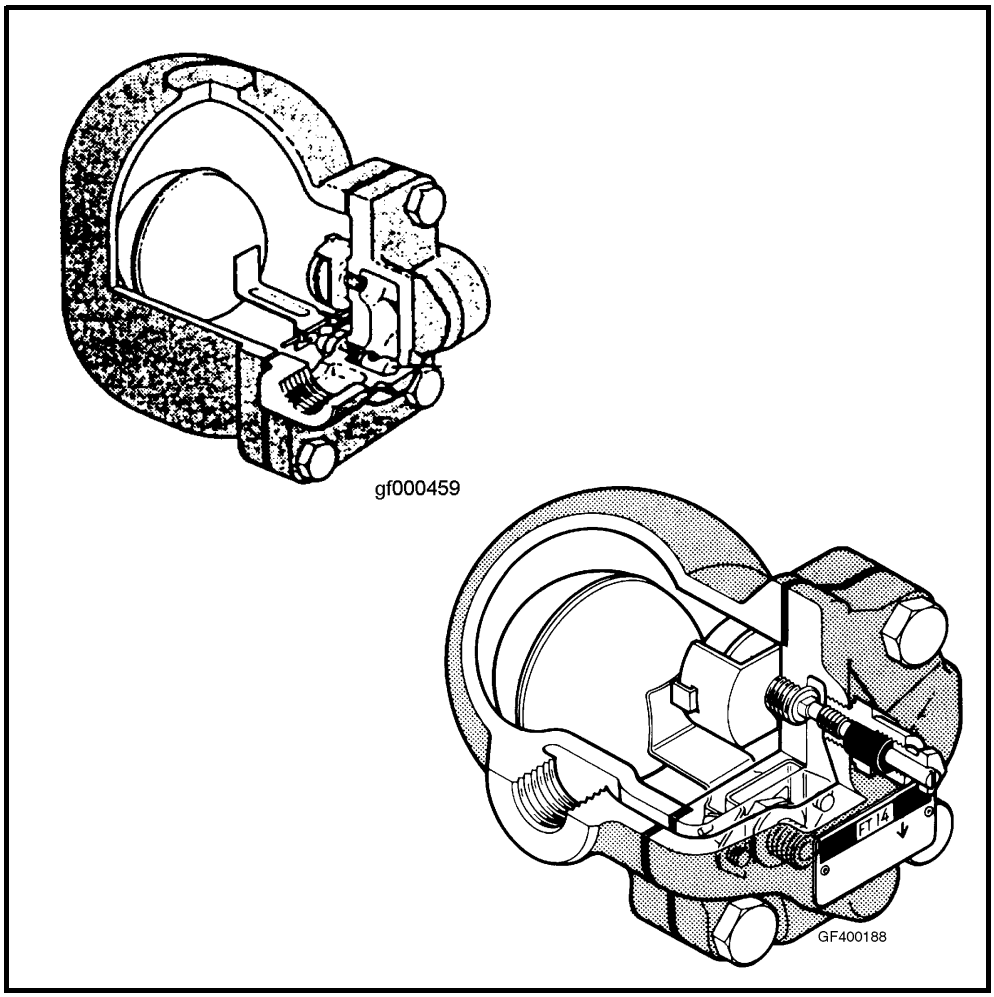

1.0 1211779-0101.fro

Tetra Pak

Doc No. 1211779-0101

Steam trap

FT14-10/14

Article No.	Type	DN	Conn.
6-31801-5046-1	FT14-10 R-L	20	3/4”
6-31801-5046-2	FT14-10 HC	25	1”
6-31801-5046-3	FT14-10	40	1 1/2”
6-31801-5046-4	FT14-10	50	2”
6-31801-5046-5	FT14-10 R-L	15	1/2”
90510-1991	FT14-10 HC	25	1”
90510-1985	FT14-10	40	1 1/2”
90510-1988	FT14-10	50	2”
90510-1992	FT14-14 HC	25	1”
90510-1986	FT14-14	40	1 1/2”
90510-1989	FT14-14	50	2”

1.0 1211779-0101.fro

Version 05 Issue 2007-12

Doc No. 1211779-0101

Tetra Pak

Tetra Pak Processing Systems AB

Maintenance **1**

Check. 1

Change spare parts 2

Spare parts **5**

1.0 1211779-0101.TOC

This page intentionally left blank

Maintenance

Check

WARNING!

Risk of burns!
Make sure before dismantling, that the pipeline is drained and free from media.

a) Check the gasket area for leakages.

b) Check the function of the steam trap.

c) Disconnect the condensate line if applicable. Check that condensate is coming out from the outlet when the trap is open and that no steam is leaking out when the trap is closed.

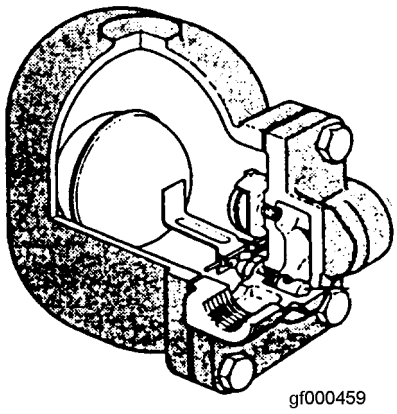

DN25-50

DN15-20

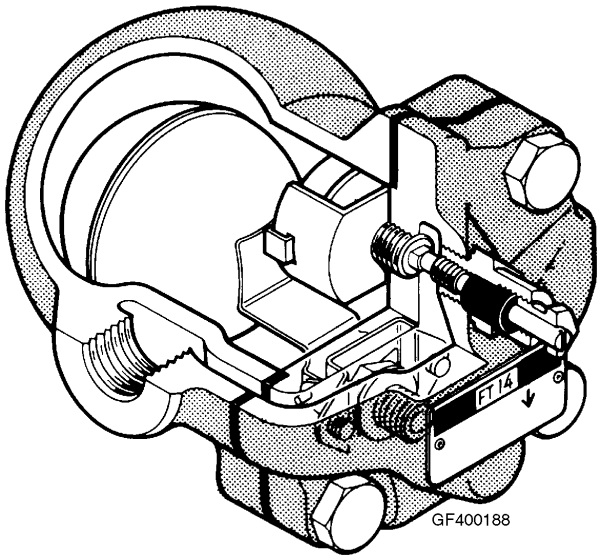

1.0 Tf500823.en

Change spare parts

DN15-20

WARNING!

Risk of burns!
Make sure before dismantling, that the pipeline is drained and free from media.

Main valve DN15 and DN20

a) Unscrew the cover screws (1).

b) Remove the cover (2).

c) Refit using the new gasket (3).

d) Unscrew the two screws (4), reassemble the pivot frame (5) and the pivot (6).

e) Remove and change the ball float (7), unscrew the main valve (8) and change the main valve gasket (9).

f) Assemble in the reverse order.

1 Cover screw
2 Cover
3 Cover gasket
4 Screws
5 Pivot frame
6 Pivot
7 Ball float
8 Main valve
9 Main valve gasket

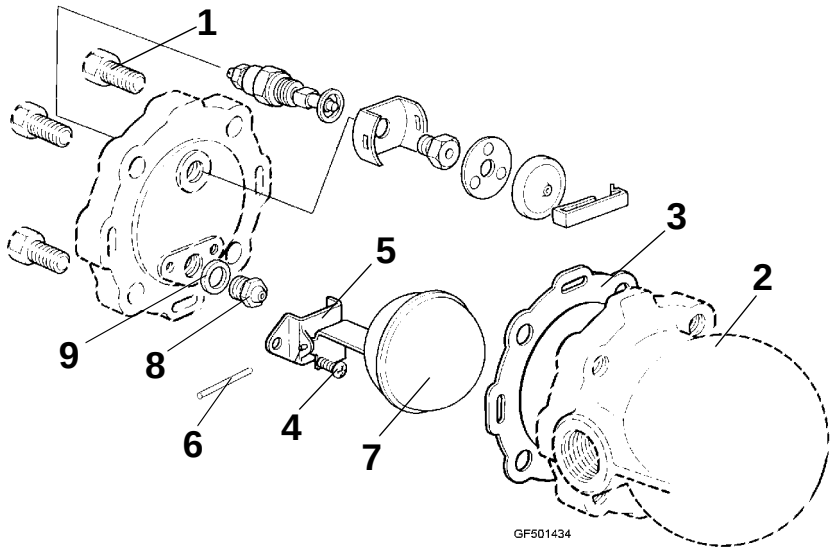

1.0 Tf500823.en

DN25-50

WARNING! **Risk of injury!**
Before dismantling, ensure that the pipeline is drained and free from media.

a) Undo cover screws (1) and remove the cover (2).
b) Refit cover using new cover gasket (3).
c) Remove the clips (4) and unscrew the screw (5).
d) Change the gasket (6).

Main valve DN25.

e) Unscrew the two screws (7).
f) Remove and change the pivot (8), the pivot frames (9) and the ball float (10).
g) Unscrew the main valve (11) and change the main valve gasket (12).

Main valve DN40 and DN50.

h) Unscrew the two screws (13). Remove the holder frame (14), the main valve (15) and change the main valve gasket (16).
i) Remove the ball float (17).
j) Assemble all in the reverse order.

(Cont'd)

1.0 Tf500823.en

(Cont'd)

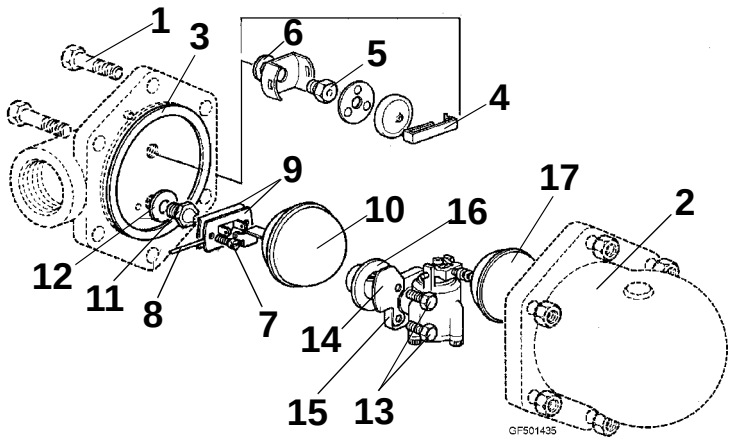

1 Cover screws
2 Cover
3 Cover gasket
4 Clips
5 Screw
6 Gasket
7 Screws
8 Pivot
9 Pivot frame
10 Ball float
11 Main valve
12 Main valve gasket
13 Screws
14 Holder frame
15 Main valve
16 Main valve gasket
17 Ball float

1.0 Tf500823.en

Spare parts

DN 15/20

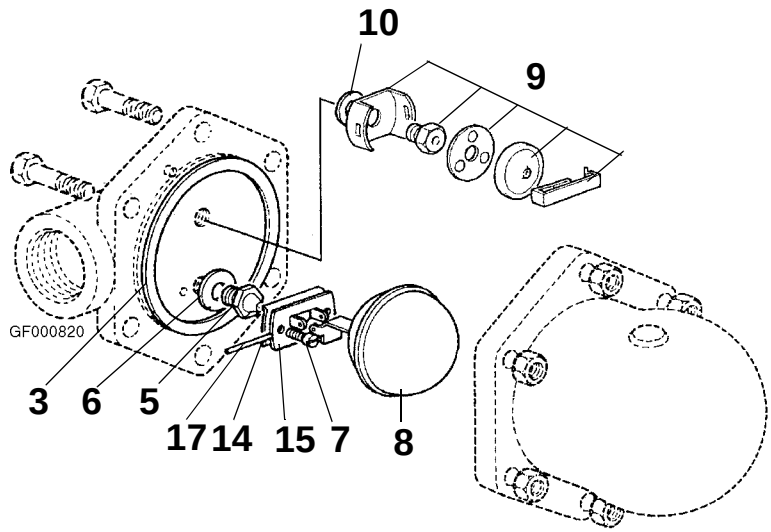

DN 25/40/50

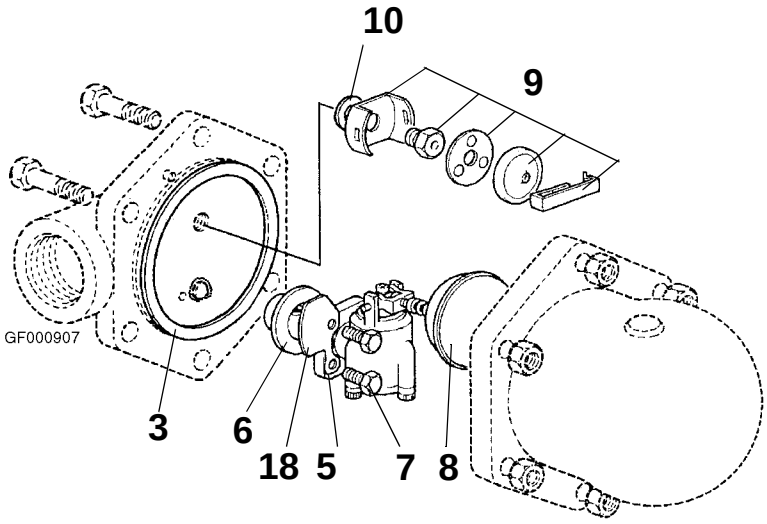

1.0 Tf500824.en

(Cont'd)

(Cont'd)

Component article No.	Spare part Article No.	Description	Pos.	Qty.
6-31801-5046-1 6-31801-5046-5	90503-6588	Spare parts kit DN 15-20	3 5 6 7 8 9 1 14 15 17	1 1 1 2 1 1 1 1 1 1
6-31801-5046-2 90510-1991 90510-1992	90503-6594	Spare parts kit DN 25	3 5 6 7 8 9 10 18	1 1 1 2 1 1 1 1
6-31801-5046-3 90510-1985 90510-1986	90503-3295	Spare parts kit DN 40		
6-31801-5046-4 90510-1988 90510-1989	90503-6597	Spare parts kit DN 50		

1.0 Tf500824.en

This page intentionally left blank

1.0 Tf500824.en

Tetra Pak

Maintenance & Spare Parts

Steam separator
(Spirax/Sarco)

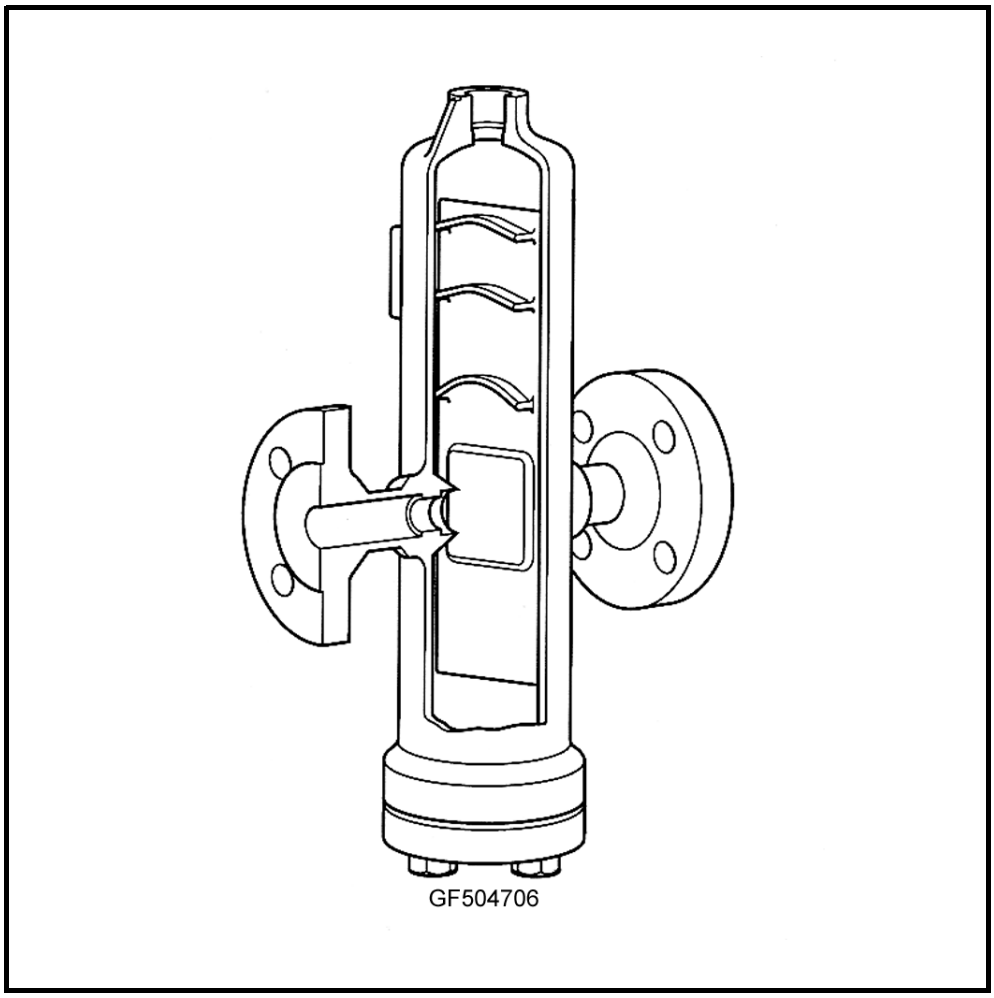

1.0 1214605-0101.fro

Tetra Pak

Doc No. 1214605-0101

Steam separator

Article No.	Type	Size
90515-6389	S1	1/2"
6-31801-9821-1	S5	DN15
6-31801-9821-2	S5	DN20
6-31801-9821-3	S5	DN25
6-31801-9821-4	S5	DN32
6-31801-9821-5	S5	DN40
6-31801-9821-6	S5	DN50
6-31801-9821-7	S5	DN65
6-31801-9821-8	S5	DN80
6-31801-9826-1	S6	DN15
6-31801-9826-2	S6	DN20
6-31801-9826-3	S6	DN25
6-31801-9826-4	S6	DN32
6-31801-9826-5	S6	DN40
6-31801-9826-6	S6	DN50
6-31801-9826-7	S6	DN65
6-31801-9826-8	S6	DN80
90515-6390	S7	DN65
90515-6391	S7	DN80
90515-6392	S7	DN100
90510-9516	S8	DN100
90515-6393	S8	DN65
90515-6394	S8	DN80
90515-6395	S8	DN100

1.0 1214605-0101.fro

Version 03 Issue 2012-05

Doc No. 1214605-0101

Tetra Pak

Tetra Pak Processing Systems AB

Maintenance 1

Description 1

Change. 1

Spare Parts 2

Not applicable for this component! 2

This page intentionally left blank

Maintenance

Description

The steam separator is a baffle type separator used for the removal of entrained liquids in steam, compressed air and gas systems.

Change

WARNING! **Risk of injury!**
Before dismantling, ensure that the pipeline is drained and free from media.

WARNING! **Risk of injury!**
Hot surfaces; always let the unit cool down to ambient temperature.

Disassemble

a) Depressurize the system.
b) Disconnect the steam separator (1) from the pipes.
c) Change the steam separator.
d) Assemble in reverse order.

2.2tf502118.en

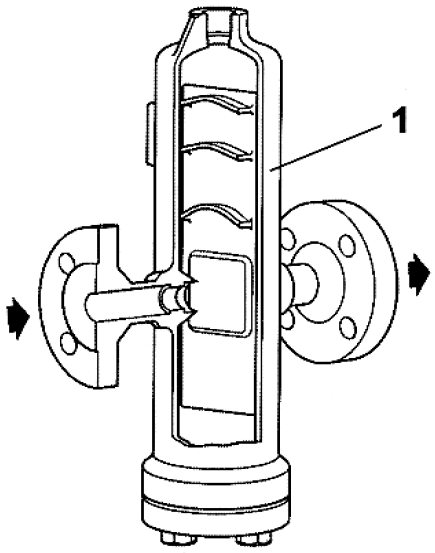

1 Steam separator

Spare Parts

Not applicable for this component!

2.2TF500785.EN

This page intentionally left blank

2.2TF500785.EN

Tetra Pak

Maintenance & Spare Parts

Particle steam filter
(Domnick Hunter)
VBA housing

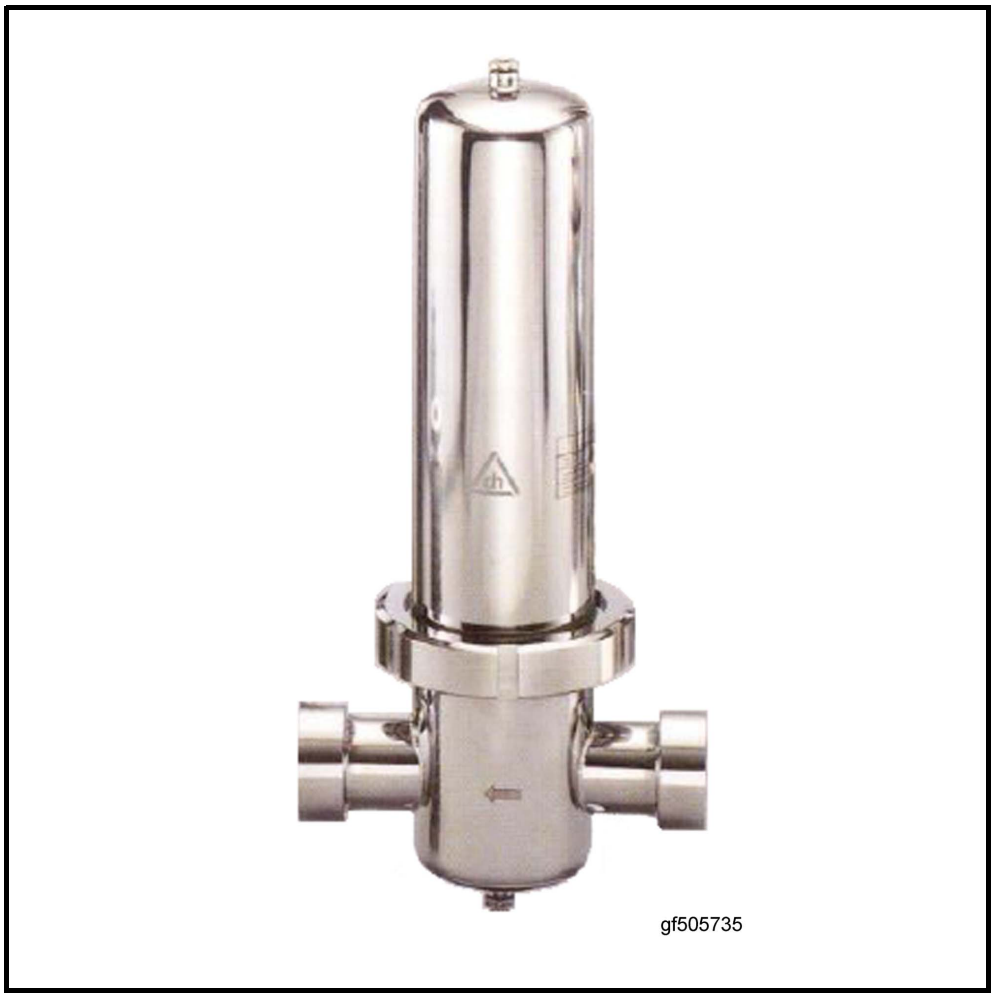

1.0 1215497-0101.fro

Tetra Pak

Doc No. 1215497-0101

Particle steam filter

VBA housing

Article No.	Denomination	Connection	Material, Housing/ Filter
6-31801-9899-1	Housing: VBA-141-AE / Filter: ZCHS1-001C-V	DN50, weld prepared	Stainless steel/ Stainless steel
6-31801-9899-2	Housing: VBA-182-AE / Filter: ZCHS2-001C-V	DN65, weld prepared	Stainless steel/ Stainless steel
6-31801-9899-3	Housing: VBA-193-AE / Filter: ZCHS3-001C-V	DN80, weld prepared	Stainless steel/ Stainless steel
6-31801-9899-4	Housing: VBA-19J3-AE / Filter: ZCHSJ-0013	DN80, weld prepared	Stainless steel/ Stainless steel
6-31801-9899-5	Housing: VBA-20J4-E-AE / Filter: ZCHSJ-0014	DN100, weld prepared	Stainless steel/ Stainless steel
90513-5216	Housing: VBA-20J4-E-AE / Filter: ZCHSJ-0054	DN100, weld prepared	Stainless steel/ Stainless steel
90523-4902	Housing: HBA 2"/ Filter: ZHFT/KC	DN50	Stainless steel/ PTFE

1.0 1215497-0101.fro

Version 08 Issue 2016-12

Doc No. 1215497-0101

Tetra Pak

Tetra Pak Processing Systems AB

Maintenance 1

General 1

Cleaning and inspection 1

Change filter cartridge. 2

Spare parts 4

1.0 1215497-0101.TOC

This page intentionally left blank

Maintenance

General

The VBA steam filter housing is provided with an exchangeable “Pleated Mesh and Metal Fibre” filter element. VBA housings also incorporate a locking ring design which facilitates use in high pressure compressed air and steam processes.

Cleaning and inspection

WARNING! **Risk of injury!**
Make sure before dismantling that steam and compressed air have been turned off. Also make sure that there is no product, steam or cleaning liquid in the pipeline. Never open the filter housing if under pressure. Wear protective gloves and goggles. In case of accident, call for medical attention immediately.

WARNING! **Risk of burns!**
Hot surfaces; always let the unit cool down to ambient temperature.

2.2Tf502445.en

The filter cartridge should be inspected and cleaned or replaced periodically. This should be done once a year or if there is a constant pressure fall in the system.

Before cleaning the filter cartridge it should be removed from the housing, see chapter “Change filter cartridge”for this operation. In normal cases it just can be rinsed with water or compressed air from inside to out through the cartridge.

Note! Be careful to dry the cartridge thoroughly before it is remounted.

Every time the filter cartridge has been removed from the housing, its two o-rings should be replaced. Also replace the o-ring in the housing.

The filter cartridge can under certain circumstances be cleaned more thoroughly. Please contact Domnick Hunter for further instructions.

Change filter cartridge

WARNING!

Risk of burns!
Make sure before dismantling that steam and compressed air have been turned off. Also make sure that there is no product, steam or cleaning liquid in the pipeline. Never open the filter housing if under pressure. Wear protective gloves and goggles. In case of accident, call for medical attention immediately.

WARNING!

Risk of burns!
Hot surfaces; always let the unit cool down to ambient temperature.

Note!

- The vessel operating parameters should not exceed the maximum operating conditions of the filter cartridges.
- Cartridges should not be subjected to excessive hydraulic shock and should never be reverse pressurised from the downstream to upstream side (inside to out through the cartridge).
- Cartridges should be changed when they have completed their pre determined life, number of steam sterilisation cycles or alternatively when the differential pressure and/or flow through the filter vessel reaches an unacceptable limit.

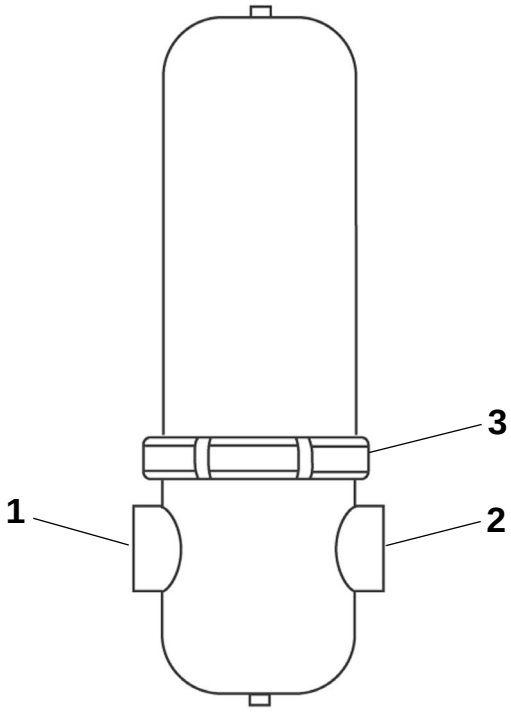

gf505975

2.2Tf502445.en

1 Upstream connection
2 Downstream connection
3 Clamp

(Cont'd)

(Cont'd)

a) Close upstream connection (1) and downstream connection (2).

b) Depressurise vessel by cracking open the vent or drain connection.

c) Remove filter bowl by releasing clamp (3). Place on a clean surface to protect seal face.

d) Remove support retaining nut/plate/cage and any springs or cup seals if these were not removed for initial flushing. In this case leave tie rods in-situ.

e) Replace internal tie rods if removed for flushing.

f) Cut open the polyethylene bag at the cartridge open end and check that the o-ring seals or gaskets are clean, intact and correctly located in their grooves.

g) Lubricate o-rings with a lubricant that is compatible with the process fluid (e.g. clean water) or use process liquid itself.

h) Using the bag as protection and holding the cartridge as near as possible to the open end as opposed to the main body of the cartridge or the top end cap, press the cartridge firmly into or onto the housing locations. Keep the cartridge vertical to prevent damage to the o-rings.

   – If the vessel has a bayonet type cartridge location, slightly turn the cartridge clock-wise to locate the retaining lugs.

i) Remove the polyethylene bag from the cartridge before the vessel is closed.

j) Check housing body seal, replace if any signs of wear or damage are evident.

k) Replace bowl and finger tighten the clamp (3).

l) Ensure that filter bowl and fastenings are secured.

m) Ensure that drain, vent and pressure gauge connections are closed and secured.

n) Slowly open the valve upstream connection (1) and allow fluid to flow into vessel.

o) Carefully check all seals, drains and vent and make good any leakage.

p) The filter vessel installation can now be run normally, within the operating parameters indicated for the vessel.

2.2Tf502445.en

Spare parts

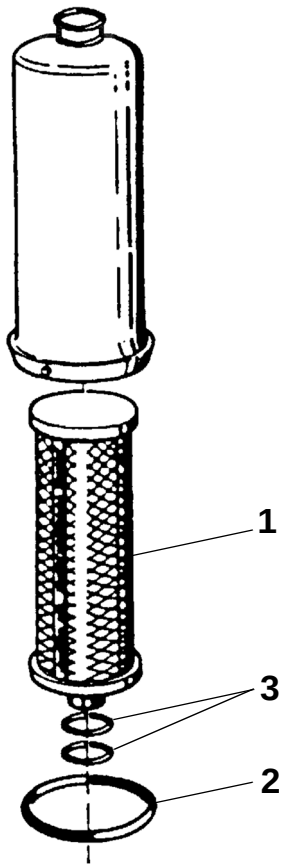

1.0Tf502446.en

Component article No.	Spare part article No.	Description	Pos.	Qty.
6-31801-9899-1	6-990407-71	Filter cartridge	1	1
	6-990407-72	O-ring, housing, EPDM	2	1
	90515-8457	O-ring, cartridge, viton	3	2
	90516-5448	O-ring, housing, viton	2	1
6-31801-9899-2	6-990407-74	Filter cartridge	1	1
	90515-5077	O-ring, housing, EPDM	2	1
	90515-8457	O-ring, cartridge, viton	3	2
6-31801-9899-3	6-990407-76	Filter cartridge	1	1
	90515-5077	O-ring, housing, EPDM	2	1
	90515-8457	O-ring, cartridge, viton	3	2
6-31801-9899-4	6-990407-77	Filter cartridge	1	1
	6-990407-78	O-ring, housing, EPDM	2	1
	6-990407-79	O-ring, cartridge, viton	3	2
6-31801-9899-5	6-990407-80	Filter cartridge	1	1
	6-990407-81	O-ring, housing, EPDM	2	1
	6-990407-82	O-ring, cartridge, viton	3	2
90513-5216	6-990407-81	O-ring, housing, EPDM	2	1
	6-990407-82	O-ring, cartridge, viton	3	2

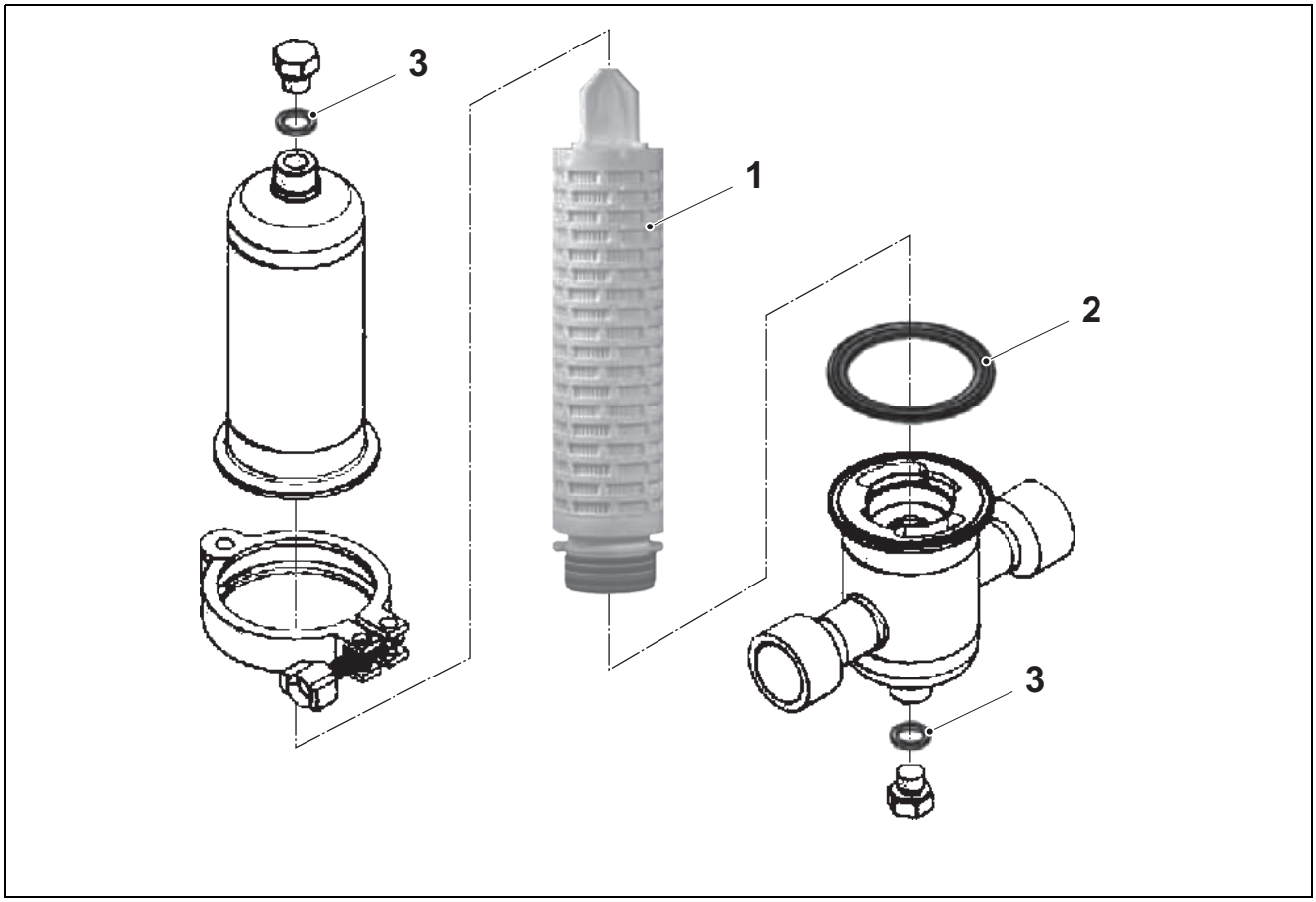

1.0Tf502446.en

90523-4902	90523-4903	Filter cartridge	1	1
	90524-1940	Gasket, housing, EPDM	2	1
	90524-1942	O-ring, PTFE	3	2

Tetra Pak

Maintenance & Spare Parts

Steam barrier
(Tetra Pak)

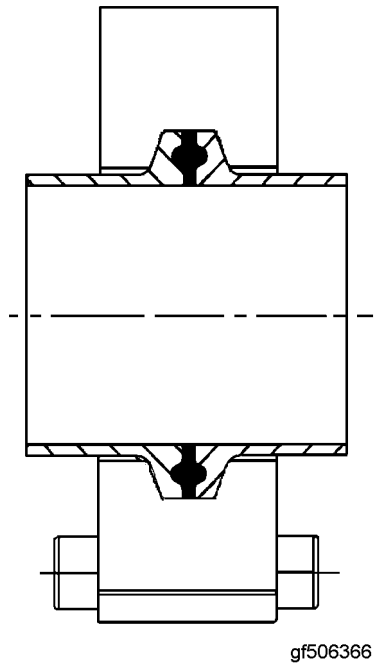

1.0 1216067-0101.fro

Tetra Pak

Doc No. 1216067-0101

Steam barrier

Article No.	Type
6-32422-0396-1	Steam barrier for clamp connection, 38 mm
6-32422-0569-1	Steam barrier for clamp connection, 25 & 38 mm
6-32422-0464-1	Steam barrier for clamp connection, 51 mm
6-32422-0467-1	Steam barrier for clamp connection, 63,5 mm
6-32422-0470-1	Steam barrier for clamp connection, 76,1 mm

1.0 1216067-0101.fro

Version 03 Issue 2012-09

Doc No. 1216067-0101

Tetra Pak

Tetra Pak Processing Systems AB

Table of contents

Maintenance 1

Change O-ring 1

Spare Parts 2

1.0 1216067-0101.TOC

This page intentionally left blank

Maintenance

Change O-ring

WARNING!

Risk of injury!
Never service the steam barrier when it is hot.
Make sure that the pipeline is drained and free from media before servicing the steam barrier.
The steam barrier and pipelines must **never** be pressurised when serviced.

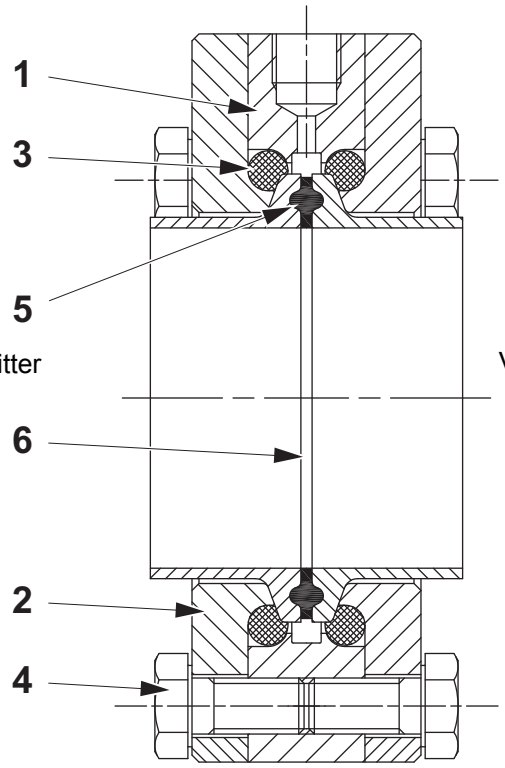

2.2tf502692.en

1 Steam ring
2 Compression ring, halves
3 O-ring
4 Screw
5 Seal ring
6 Distance ring

a) Depressurize the system.
b) Loosen the eight screws (4).
c) Separate the two compression ring halves (2).
d) Remove steam ring (1).
e) Change O-rings (3) and seal ring (5).
f) Reassemble in reverse order. Fit seal ring (5) on distance ring (6).

Spare Parts

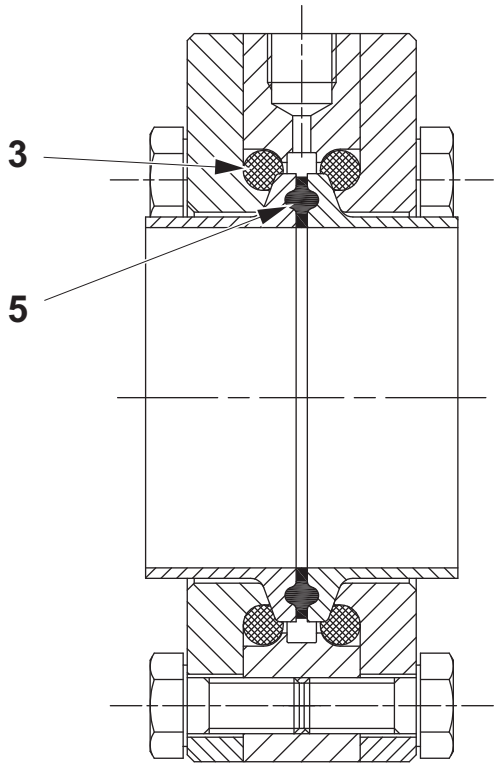

1.0tf502693.en

Component article No.	Spare part Article No.	Description	Pos.	Qty.
6-32422-0396-1	90512-1347	O-ring EPDM 45.30 X 5.70	3	2
	6-2900-44	Tri-Clover 40MP-E EPDM 3A 1.5"	5	1
6-32422-0569-1	90512-1347	O-ring EPDM 45.30 X 5.70 mm	3	2
	6-2901-41	Tri-Clover 40MP-E EPDM 3A 1"	5	1
	6-2900-44	Tri-Clover 40MP-E EPDM 3A 1.5"	5	1
6-32422-0464-1	90503-7942	O-ring EPDM 59.20 X 5.70 mm	3	2
	6-2900-43	Tri-Clover 40MP-E EPDM 3A 2"	5	1
6-32422-0467-1	90503-7943	O-ring EPDM 72.00 X 6.00 mm	3	2
	6-2900-48	Tri-Clover 40MP-E EPDM 3A 2 1/2"	5	1
6-32422-0470-1	90503-7944	O-ring EPDM 85.09 X 5.33 mm	3	2
	6-2900-36	Tri-Clover 40MP-E EPDM 3A 3"	5	1

This page intentionally left blank

1.0ff502693.en

Tetra Pak

Maintenance & Spare Parts

E/P Regulator

(SMC)

ITV1050/ ITV2050



1.0 1224084-0101.fro

Tetra Pak

Doc No. 1224084-0101

E/P Regulator

ITV1050/ ITV2050

This document refers to components specified in Technical Manual, on Maintenance & Spare Parts CD/DVD or on Tetra Pak Intranet.

1.0 1224084-0101.fro

Version 03 Issue 2015-03

Doc No. 1224084-0101

Tetra Pak

Tetra Pak Processing Systems AB

Function Description 1

Maintenance 2

Wiring 2

Programming the Set-Points 3

Error indicating function 6

Spare Parts 7

Not applicable for this component! 7

1.0 1224084-0101.TOC

This page intentionally left blank

Function Description

When the input signal rises, the air supply solenoid valve (1) turns ON, and the exhaust solenoid valve (2) turns OFF. Therefore, supply pressure passes through the air supply solenoid valve (1) and is applied to the pilot chamber (3). The pressure in the pilot chamber (3) increases and operates on the upper surface of the diaphragm (4).

As a result, the air supply valve (5) linked to the diaphragm (4) opens, and a portion of the supply pressure becomes output pressure.

This output pressure feeds back to the control circuit via the pressure sensor (7). Here, a correct operation functions until the output pressure is proportional to the input signal, making it possible to always obtain an output pressure proportional to the input signal.

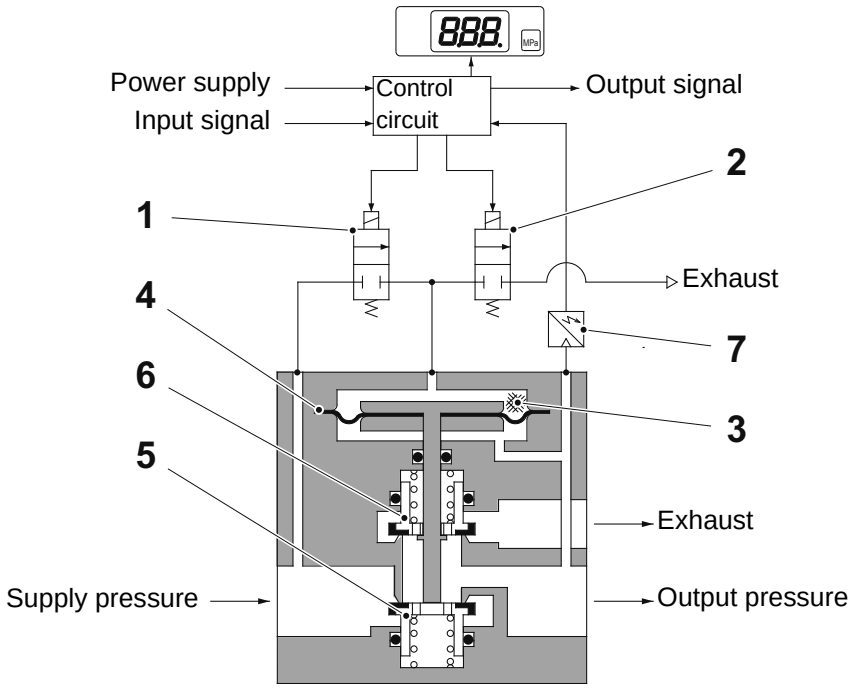

2.2tf506376.en

Maintenance

Wiring

Caution! Proceed carefully, as incorrect wiring can cause damage.
Turn off the power supply to remove and insert the connector.

Caution! Never turn the right-angled type connector as it is not designed to turn.

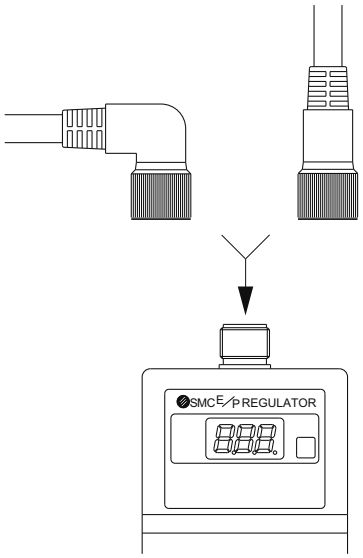

1 Brown: Power supply 24V DC
2 White: Input signal 4-20mA DC
3 Blue: GND (common)
4 Black: Monitor output

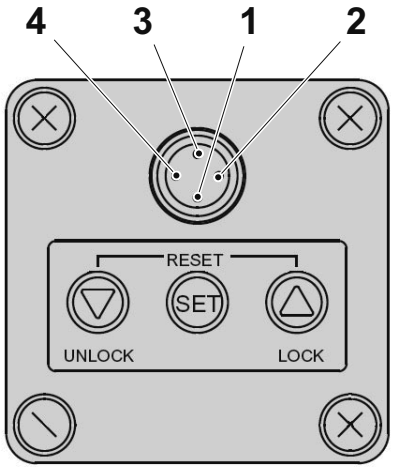

2.2tf5063 76.en

Power supply and input signal

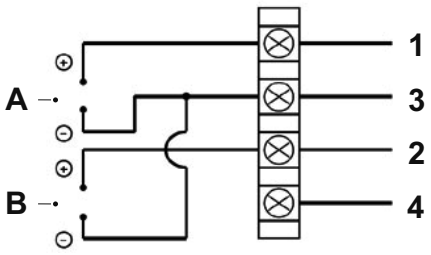

A) Power supply
B) Input signal
C) Monitor output current
D) Load
1) Brown: Power supply 24V DC
3) Blue: GND (common)
2) White: Input signal 4-20mA DC
4) Black: Monitor output

Monitor output

Analogue output 4-20mA (sink type)

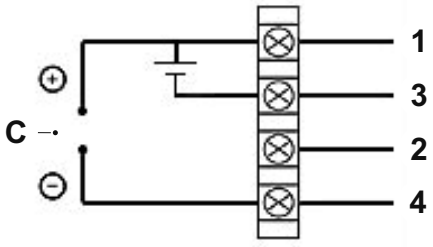

Switch PNP type

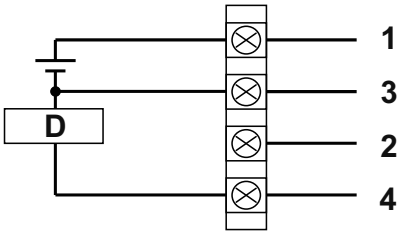

Programming the Set-Points

Note! If the incorrect key is pressed or incorrect information is displayed during setting, power must be shut off and the procedure started again.

Caution! It is recommended that the settings are changed without supply pressure. The product operates as soon as maximum and minimum pressures are set and the <SET> key is pressed.

Note! The minimum pressure is output when air is supplied to the inlet, even if the input signal has not been entered.

General Procedure

a) Unock keypad
   - Press and hold the down key for 2 seconds or longer. The display will blink Loc.
   - Press the set key to unlock the keys.
   - Press the SET key to continue to the next step.

b) Set the minumum pressure (F_1)
   - Press the UP and DOWN keys until the display shows the desired minimum pressure.
   - Press and release the SET key to continue to the next step.

c) Set the maximum pressure (F_2)
   - Press the UP and DOWN keys until the display shows the desired maximum pressure.
   - Press and release the SET key to continue to the next step.

d) Set the monitor pressure (P_1)
   - Press the UP and DOWN keys until the display shows the desired monitor pressure.
   - Press and release the SET key to continue to the next step.

e) Set the monitor pressure (P_1)
   - Press the UP and DOWN keys until the display shows the desired monitor pressure.
   - Press and release the SET key to finish the setup.
   - The display returns to the current pressure.

(Cont'd)

2.2tf506376.en

(Cont'd)

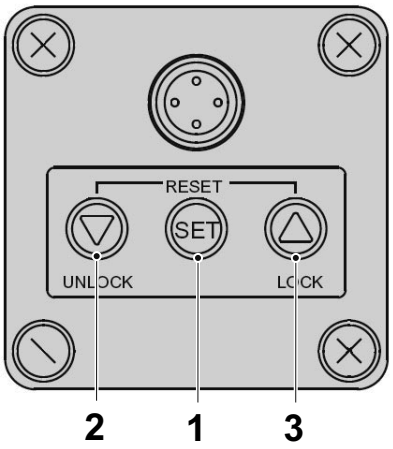

1. SET
2. DOWN
3. UP

Current type

ITV 2050

No	Key operation	LED Display
1	Unlock keys (refer to page 5)	
2	Press <SET> key (1)	
3	Set the minimum pressure by using the Up and Down keys (2, 3)	F_1 <-> 0.00 (displayed alternately) Change the value by using Up and Down keys (2, 3). *Adjusting range: Refer to figures and notes on next page.
4	Press <SET> key (1)	
5	Set the maximum pressure by using the Up and Down keys (2, 3)	F_2 <->0.90 (displayed alternately) Change the value by using Up and Down keys (2, 3). *Adjusting range: Refer to figures and notes on next page.
6	Press <SET> key (1)	Return to (current) pressure display.
7	Lock keys (refer to next page)	

2.2tf506376.en

ITV 1050

6	Set the P_1 by using the Up and Down keys (2, 3).	P_1 <->0.00 (displayed alternately) Change the value by using Up and Down keys (2, 3).
7	Press <SET> key (1)	
8	Set the P_2 by using the Up and Down keys (2, 3).	P_2 <->0.90 (displayed alternately) Change the value by using Up and Down keys (2, 3).
9	Press <SET> key (1)	Return to (current) pressure display.
10	Lock keys (refer to next page)	

(Cont'd)

(Cont'd)

Minimum pressure (F_1) adjusting range	Maximum pressure (F_2) adjusting range
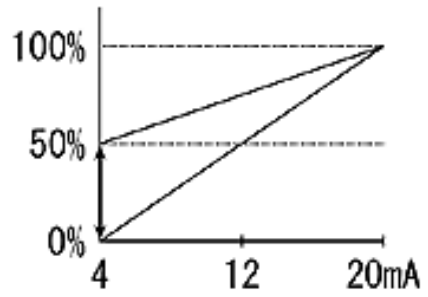	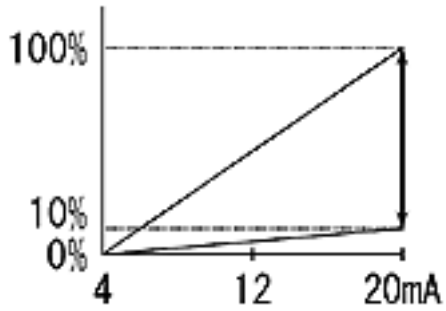

F_1 is adjustable in a range from 0 to 50% of the rated value.

F_2 is adjustable in a range from 10 to 100% of the rated value.

The difference between F_1 and F_2 is adjustable in a range of 10% of the rated value.

The adjustment like making the relation of F_1>F_2 is not available.

2.2tf506376.en

Error indicating function

No	LED display	Contents of error	Counter-measure
1	Er.1	Input signal exceeds the rated value range.	Reduce input signal to within the rated range and restart the power supply.
2	Er.2	Reading and writing errors occurred in EEPROM.	Contact supplier.
3	Er.3	Reading and writing errors occurred in memory.	Contact supplier.
4	Er.4	Solenoid valve failure.	Contact supplier.
5	Er.5	Overcurrent errors in output	Prevent overcurrent errors by ensuring that load meets the specification.

2.2tf5063376.en

Spare Parts

Not applicable for this component!

2.2tf506377.en

Tetra Pak

Maintenance & Spare Parts

Steam trap
(Spirax Sarco)
FT43

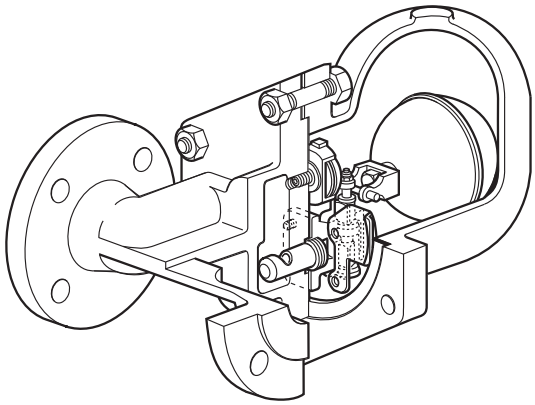

1.0 1225994-0101.fro

Tetra Pak

Doc No. 1225994-0101

Steam trap

FT43

Article No.	Type	Size
90511-6240	FT43	DN25
90511-9492	FT43	DN25
90511-6241	FT43	DN40
90512-5708	FT43	DN40
90510-2538	FT43	DN40
90511-6242	FT43	DN50
90511-9494	FT43	DN50

1.0 1225994-0101.fro

Version 03 Issue 2014-08

Doc No. 1225994-0101

Tetra Pak

Tetra Pak Processing Systems AB

Table of contents

Function Description 1

Maintenance 2

Replace main valve assembly 3

DN25 3

DN40 and DN50 4

Replace air vent assembly 5

DN25 to DN50 5

Tightening torques 6

Spare Parts 7

1.0 1225994-0101.TOC

This page intentionally left blank

Function Description

The FT43 is a ball float steam trap bodied in cast iron with inside parts made of stainless steel. The FT43 has an automatic air venting facility. The trap is supplied with integrally flanged connections and can be maintained without disturbing the pipework.

Flow direction for the horizontal trap is illustrated below.

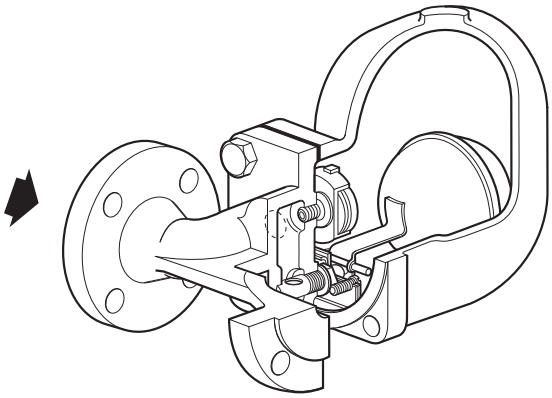

FT43 (DN25)

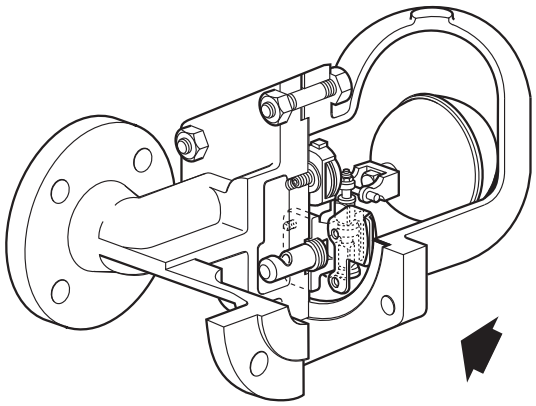

FT43 (DN40 & DN50)

2.2tf5073340.en

Maintenance

WARNING! **Risk of burns!**
Before dismantling, ensure that the pipeline is drained and free from media.

Caution! The cover gasket contains a thin stainless steel support ring which may cause physical injury if not handled and disposed of carefully.

2.2tf507340.en

Replace main valve assembly

DN25

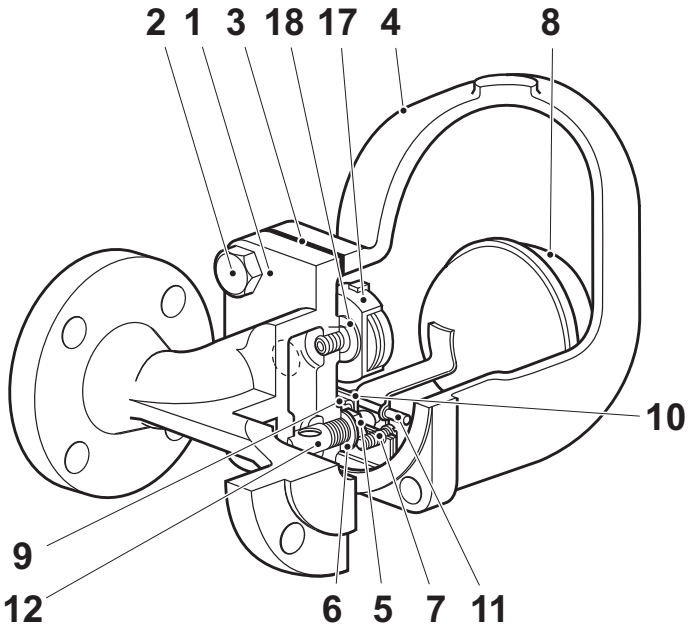

1	Body	8	Ball float and lever
2	Cover bolts	9	Support frame
3	Cover gasket	10	Pivot frame
4	Cover	11	Pivot pin
5	Valve seat	12	Erosion deflector
6	Valve seat gasket	17	Air vent assembly
7	Pivot frame assembly bolts	18	Air vent seat gasket

a) Unscrew the support frame (9), pivot frame (10) and the valve seat (5).

b) Ensure the seat/gasket faces are clean and dry.

c) Fit the new gasket (6) and the valve seat (5) to the body (Do not use gasket paste).

d) Attach the support frame (9) and pivot frame (10) to the body (1) with the pivot frame assembly bolts (7) but do not tighten.

e) Fit the float lever (8) to the pivot frame (10) using the pivot pin (11) and centre the valve head onto the seat orifice by moving the complete assembly.

f) Tighten the assembly set screws (see torque table on page 6).

2.2tf5073340.en

DN40 and DN50

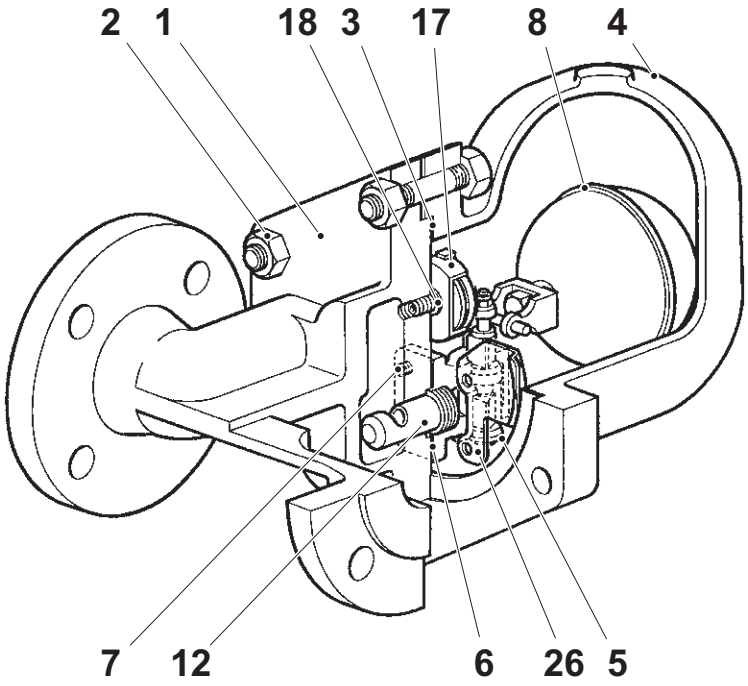

1	Body	7	Main valve assembly bolts
2	Cover nuts and stud	8	Ball float and lever
3	Cover gasket	12	Erosion deflector
4	Cover	17	Air vent assembly
5	Main valve assembly	18	Air vent seat gasket
6	Main valve assembly gasket	26	Inlet plate

2.2tf507340.en

a) Unscrew the main valve assembly bolts (7).

b) Remove the main valve assembly (5) and gasket (6).

c) Ensure the gasket faces are clean and dry.

d) Fit the new gasket (6) and the main valve assembly (5), including the baffle plate.

e) Tighten the bolts or nuts (7) evenly (see torque table on page 6).

Replace air vent assembly

DN25 to DN50

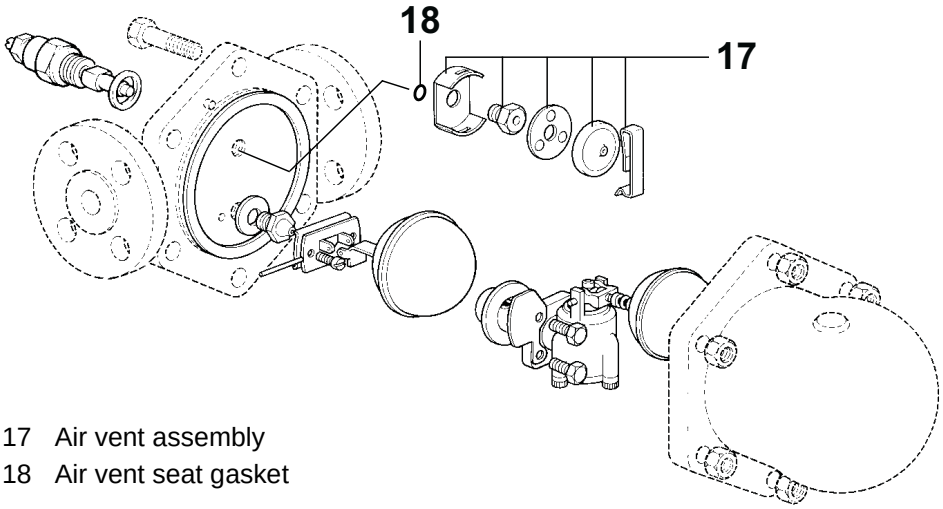

17 Air vent assembly
18 Air vent seat gasket

Replace the air vent assembly (17) following the steps below:

a) Remove the parts included in the air vent assembly: spring clip, capsule, spacer plate, unscrew the seat and remove the frame.

b) Remove the gasket (18).

c) Fit the new gasket (18), the frame and seat and tighten to the recommended torque (see torque table on page 6).

d) Assemble the new spacer plate, capsule and clip.

2.2tf5073340.en

Tightening torques

Pos.	Part	Size	Nm
2	Cover bolts/nuts/studs	DN25	29-33
		DN40	60-66
		DN50	80-88
5	Valve seat/Main valve assembly	DN25	50-55
7	Main valve assembly bolts/Studs and nuts	DN25	2,5-2,8
		DN40	10-12
		DN50	20-24
17	Air vent assembly	-	50-55

2.2tf507340.en

Spare Parts

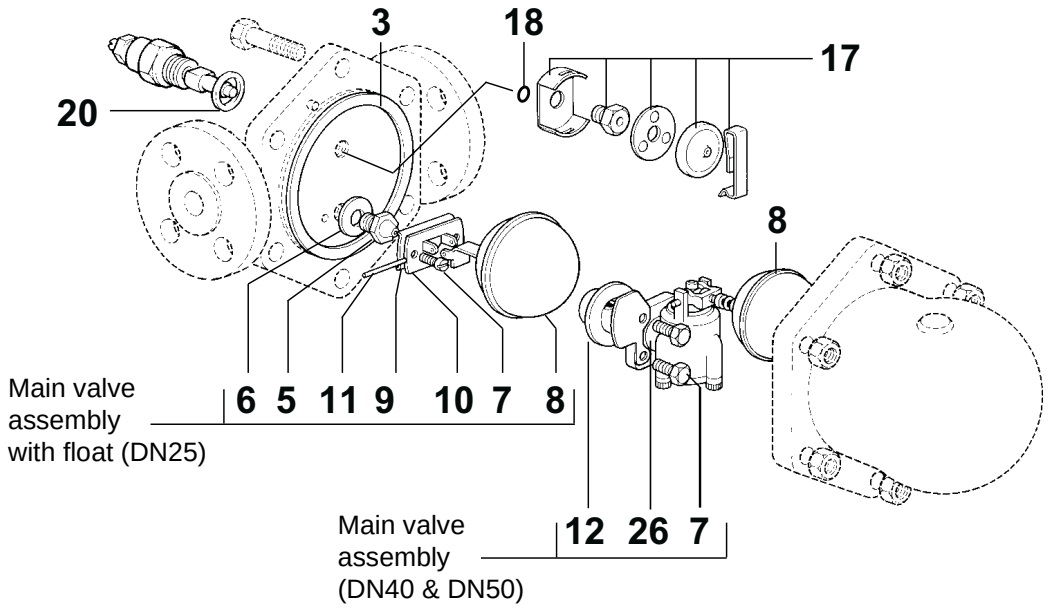

Component article No.	Spare parts Article No.	Description	Pos.	Qty
90511-9492	90518-9071	Spare part kit FT43-4,5 DN25	3 5 6 7 8 9 10 11 17 18 20	1
90511-6240	90520-0401	Spare part kit FT43-4,5 DN25		
90510-2538	831887	Spare part kit FT43-4,5 DN40	3 5 6 7 12 17 18 20 26	1
90511-6241	90520-0402	Spare part kit FT43-10 DN40		
90512-5708	90520-0403	Spare part kit FT43-14 DN40		
90511-9494	90520-0404	Spare part kit FT43-4,5 DN50		
90511-6242	90512-7351	Spare part kit FT43-10 DN50		

2.2tf5507341.en

Tetra Pak

Maintenance & Spare Parts

Control Panel

(Tetra Pak)
CCP T / CCP TA



1.0 1228796-0101.fro

Tetra Pak

Doc No. 1228796-0101

Control Panel

CCP T / CCP TA

Spare Parts

When in need of spare parts, please look in the Panel Electrical Documents.

Reference Document

Maintenance & Spare Parts document number can be found in the Panel Electrical Document.
Control Panel Service Document can be found in the following place:
http://products.tetrapak.com/service_portfolio/product_families/maintenance_services/preventive_maintenance/prev_main_f_pross_uni/Pages/default.aspx

Note! The document is at the top of the list.

1.0 1228796-0101.fro

Version 02 Issue 2012-02

Doc No. 1228796-0101

Tetra Pak

Tetra Pak Processing Systems AB

This page intentionally left blank

Tetra Pak

Maintenance & Spare Parts

Strainer
(Spirax/Sarco)

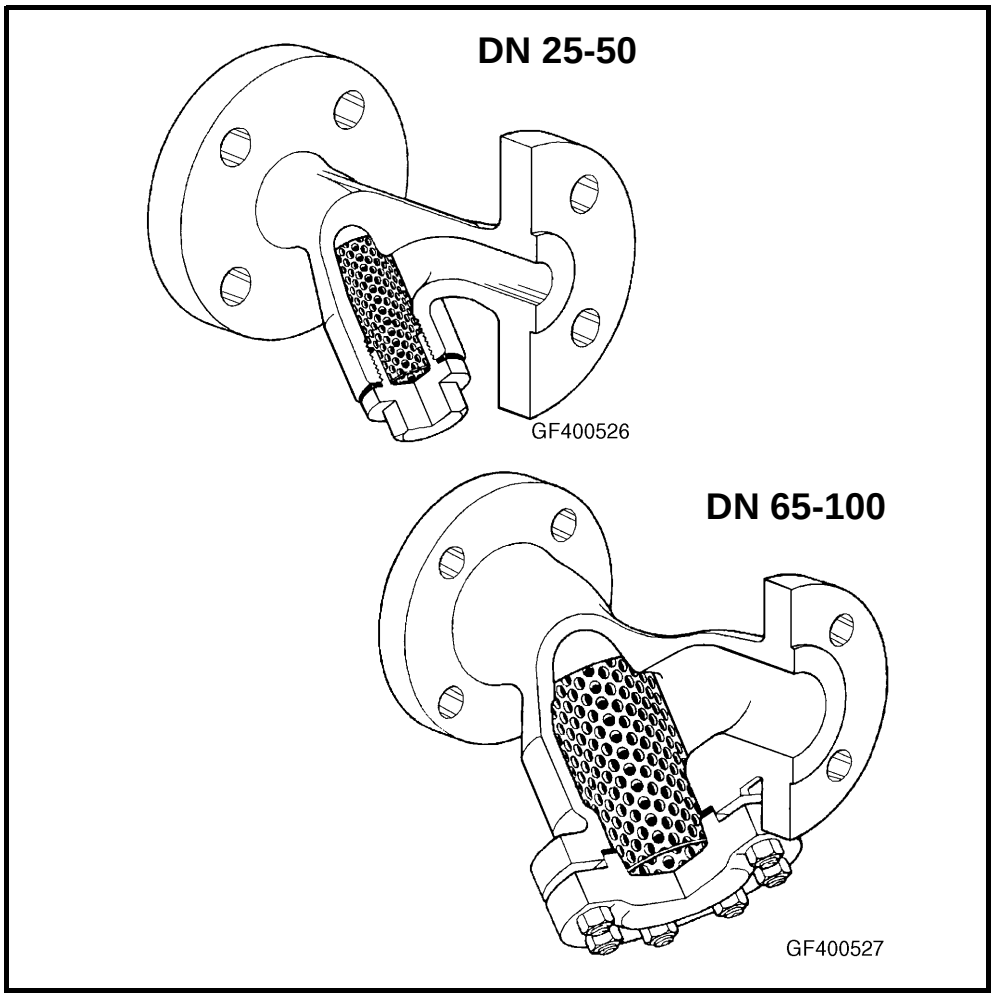

1.0 1241073-0101.fro

Tetra Pak

Doc No. 1241073-0101

Strainer

Article No.	Connection
6-31801-5044-1	25
6-31801-5044-2	32
6-31801-5044-3	40
6-31801-5044-4	50
6-31801-5044-5	65
6-31801-5044-6	80
6-31801-5044-7	100
90516-5248	1”

1.0 1241073-0101.fro

Version 04 Issue 2015-04

Doc No. 1241073-0101

Tetra Pak

Tetra Pak Processing Systems AB

Table of contents

Maintenance 1

Strainer 1

Description 1

Check. 1

Change. 1

Spare parts 2

1.0 1241073-0101.TOC

This page intentionally left blank

Maintenance

Strainer

Description

Iron strainer with standard sieve of stainless steel with 0.8 (DN 25-80) or 1.6 (DN 100) mm perforations.

Check

WARNING!

Risk of injury!
Make sure before dismantling, that the pipeline is drained and free from media.

Disassemble and check for impurities and mechanical damage.

Change

WARNING!

Risk of injury!
Make sure before dismantling, that the pipeline is drained and free from media.

a) DN 25-50:Remove the cap (1).
DN 65-100: Unscrew the nuts (2) and remove the cover (3)

b) Change all parts in the service kit or clean the strainer (4).

c) Refit in the reverse order.

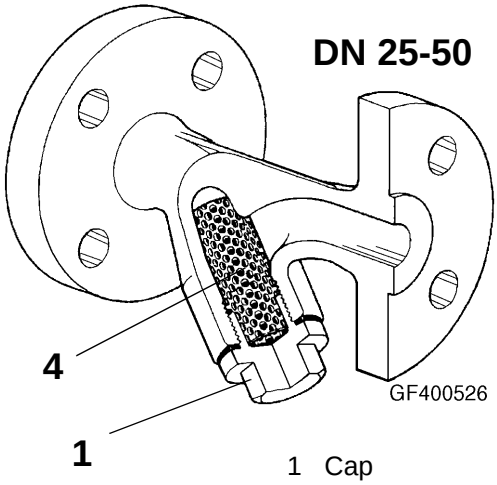

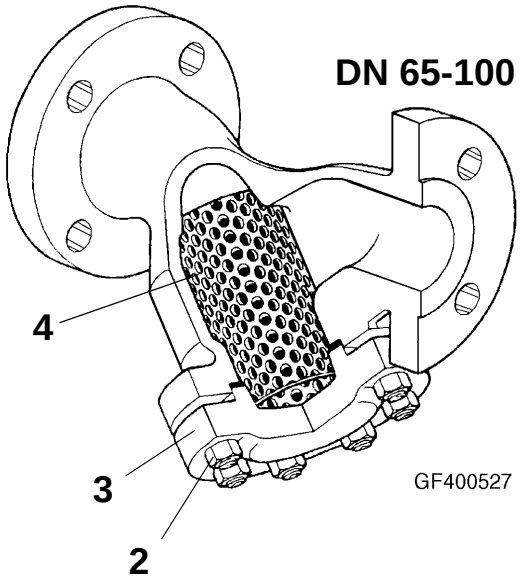

1 Cap
2 Nut
3 Cover
4 Strainer

2.2TF400201.EN

Spare parts

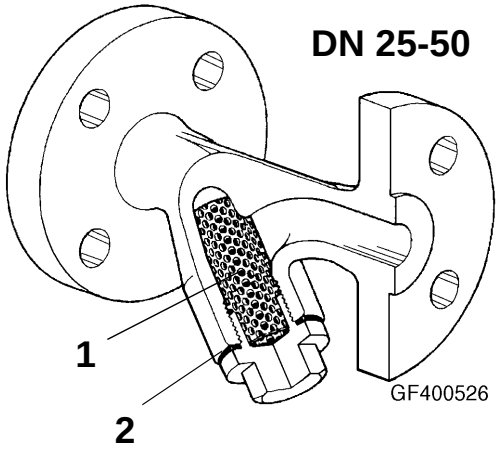

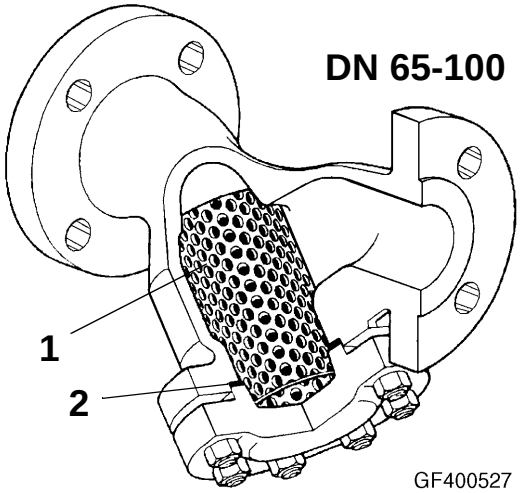

Description	Pos.	Qty	Spare parts Article No.	Description
Spare parts kit DN25 / 1”	1	1	6-990411-86	Strainer screen
	2	1		Cap gasket
Spare parts kit DN32	1	1	6-990411-87	Strainer screen
	2	1		Cap gasket
Spare parts kit DN40	1	1	6-990411-88	Strainer screen
	2	1		Cap gasket
Spare parts kit DN50	1	1	6-990411-89	Strainer screen
	2	1		Cap gasket
Spare parts kit DN65	1	1	6-990414-58	Strainer screen
	2	1		Cover gasket
Spare parts kit DN80	1	1	6-990414-59	Strainer screen
	2	1		Cover gasket
Spare parts kit DN100	1	1	6-990414-60	Strainer screen
	2	1		Cover gasket

2.2TF400202.EN

This page intentionally left blank

Tetra Pak

Maintenance & Spare Parts

Air regulator
(Metal Work)

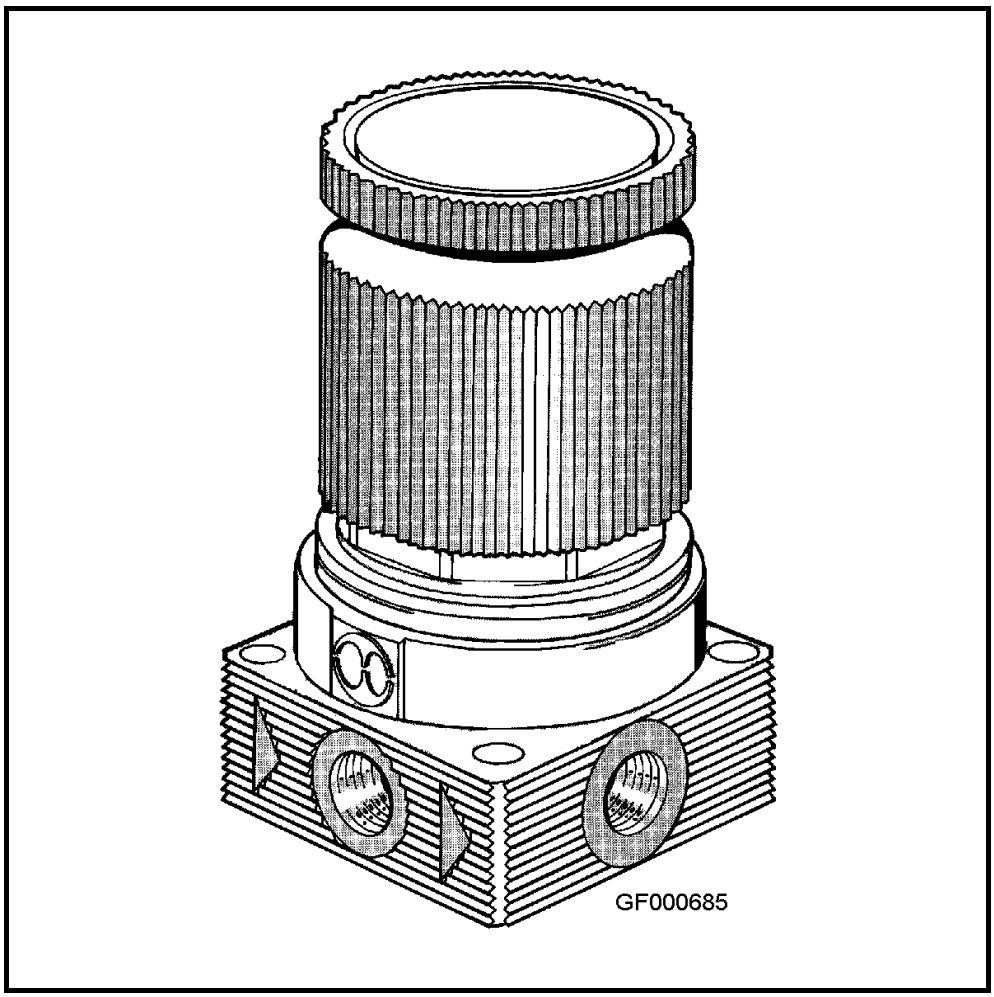

1.0 1241164-0101.fro

Tetra Pak

Doc No. 1241164-0101

Air regulator

Article.no	**Type**	**Description**	Manometer	Mounting bracket
6-990-430-45	REG.P. 1/4 08 Special	Air regulator	M40 1/8 0-10 bar	SF 300
90503-3190	REG.P. 1/4 08	Air regulator Lockable	M40 1/8 0-10 bar	SF 300

1.0 1241164-0101.fro

Version 02

Doc No. 1241164-0101

Tetra Pak

Tetra Pak Processing Systems AB

Maintenance **1**

Air regulator - description 1

Regulator - change 2

Manometer - change 3

Spare parts **4**

1.0 1241164-0101.TOC

This page intentionally left blank

Maintenance

Air regulator - description

The precision regulator is used to control the set pressure accurately and precisely. The high precision and the low hysteresis of this regulator are achieved by the virtual absence of friction. This feature is obtained by using a rolled diaphragm and metal to metal seals.
There is a constant bleed due to the good function of the regulator. This is not to be considered as a malfunction.

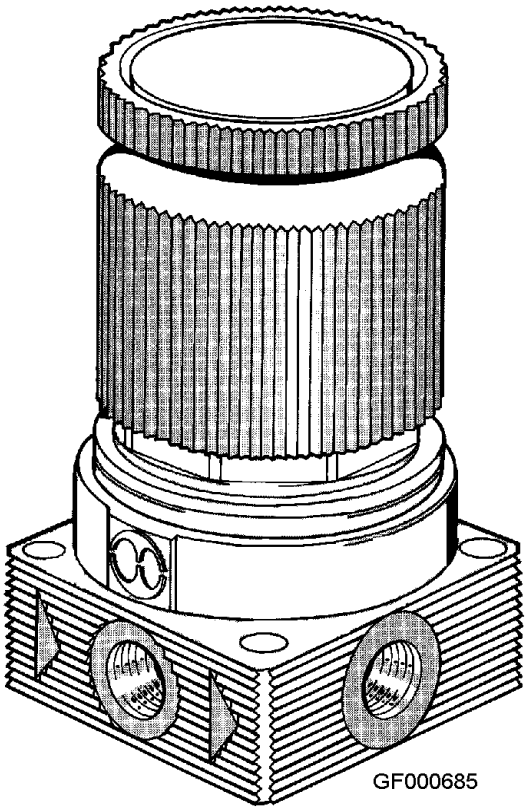

2.2TF000618.en

Regulator - change

WARNING!

High pressure!
Turn off air supply before dismantling any components from the system.

To change the regulator proceed as follows:

a) If necessary remove the manometer, see section below.
b) Disconnect the inlet/outlet port (1, 2).
c) Pull off the adjustment knob (4) (pull straight up).
d) Unscrew the mounting nut (3) with help of an open ended spanner.
e) Remove the regulator from the mounting bracket.
f) Replace the regulator and reassemble in reverse order.
g) If manometer is not mounted on the new regulator fit the manometer as described in section below.

1 Outlet port
2 Inlet port
3 Mounting nut
4 Adjustment knob
5 Manometer port

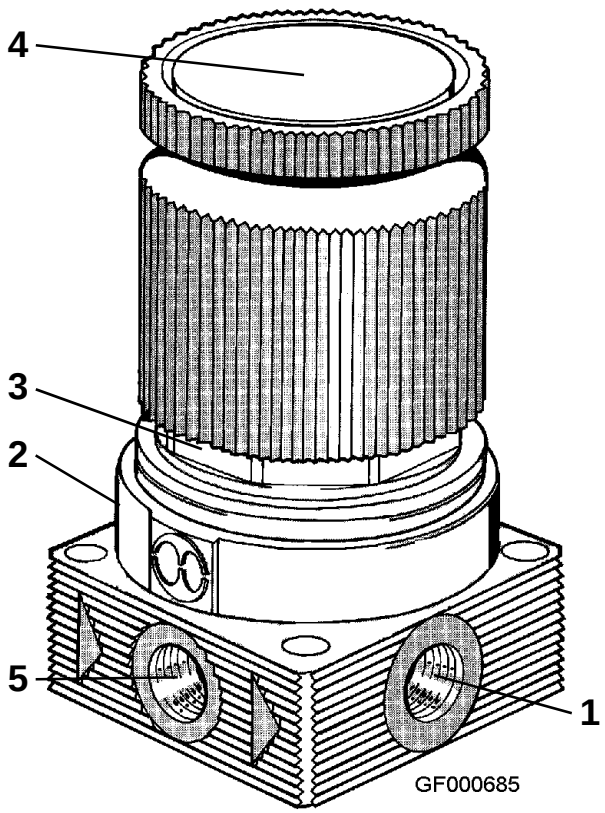

2.2TF000618.en

Manometer - change

Caution! Do NOT use any tools to screw/unscrew the manometer. This may cause damage to the manometer or threads.

Unscrew the manometer counter clockwise.

If applicable put teflon tape on the manometer threads. Fit and tighten the new manometer clockwise.

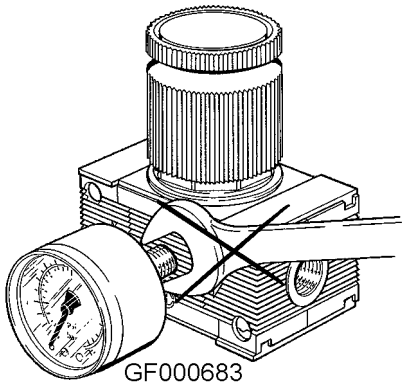
GF000683

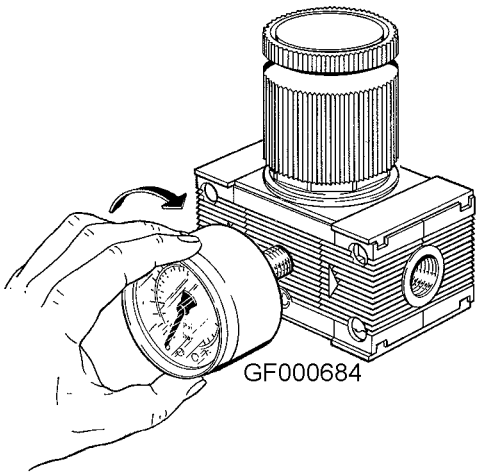
GF000684

2.2TF000618.en

Spare parts

Component Article No	Spare Part Article No	Type	Description
6-990-430-45 90503-3190	31801-5194-3	M40 1/8 0-10 bar	Manometer

2.2TF000619.en

This page intentionally left blank

2.2TF000619.en

Tetra Pak

Maintenance & Spare Parts

Steam injector
(Tetra Pak)

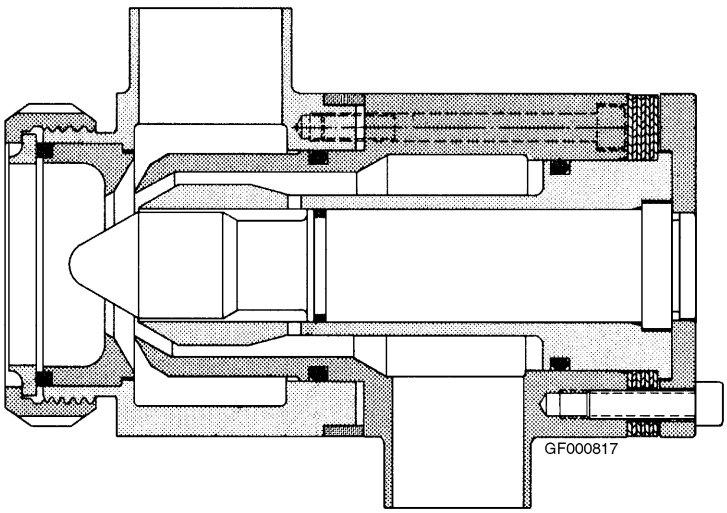

1.0 1241195-0101.fro

Tetra Pak

Doc No. 1241195-0101

Steam injector

Article No.	Capacity	Connection Product in/out
6-32422-0221-1	4,5-20 m^3/h	w51/ sms 76 mm
6-32422-0336-1	4,5-20 m^3/h	w51/ w77

1.0 1241195-0101.fro

Version 05 Issue 2016-04

Doc No. 1241195-0101

Tetra Pak

Tetra Pak Processing Systems AB

Table of contents

Maintenance 1

Steam injector 1

General 1

Change outlet gasket 2

Connection: w51/sms76. 2

Change O-rings 2

Connection: w51/sms76, w51/w77 2

Spare parts 4

1.0 1241195-0101.TOC

This page intentionally left blank

Maintenance

Steam injector

General

The steam injector is used to sterilize milk products at high temperatures. The product is heated a short period of time by steam injection.

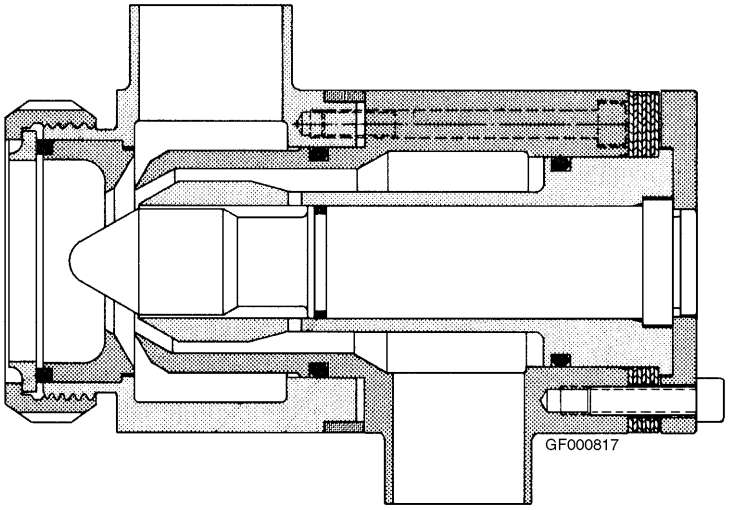

2.2TF000664.EN

Change outlet gasket

Connection: w51/sms76

WARNING! **Never** service the injector when it is hot.
Make sure that the pipeline is drained and free from media before servicing the injector!

Caution! The edges (1,3) of the product inlet and the control sleeve are very easily damaged. Handle with care!

a) Loosen nut (6).
b) If needed, also loosen nut or clamp at the other end of the pipe (4).
c) Change gasket (5).
d) Reassemble in reverse order.

Change O-rings

Connection: w51/sms76, w51/w77

a) Loosen and remove screws (18).
b) Remove flange (14).
c) Remove control sleeve (17) with shims (13).
d) Remove O-ring (11).
e) Fit a screwdriver or similar in the groove (16) to remove the guide spindle (15) from the control sleeve (17). The guide spindle can also be removed by carefully hitting its nose (2) with a rubber mallet or by letting the nose hit a rubber cloth or similar placed on a table.

2.2TF000664.EN

Caution! Be very careful not to damage the edge (3) of the control sleeve.

f) Remove O-ring (9).
g) Loosen and remove screws (12).
h) Seperate the product inlet (10) from the steam housing (7).

Caution! Be very careful not to damage the edge (1) of the product inlet.

i) Remove O-ring (8).
j) Change the O-rings (8,9,11) and lubricate new O-rings with silicone grease or silicone oil before reassembling.
k) Reassemble in reverse order.

Connection: w51/sms76

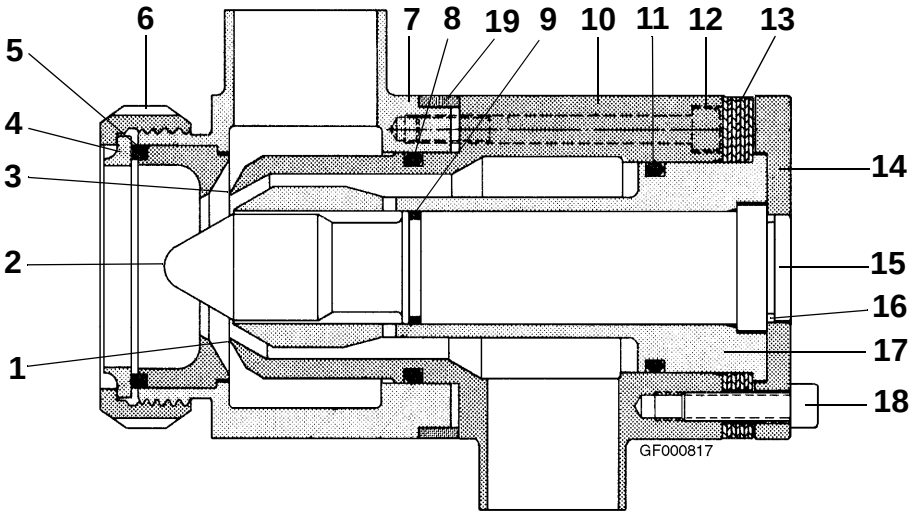

Connection: w51/w77

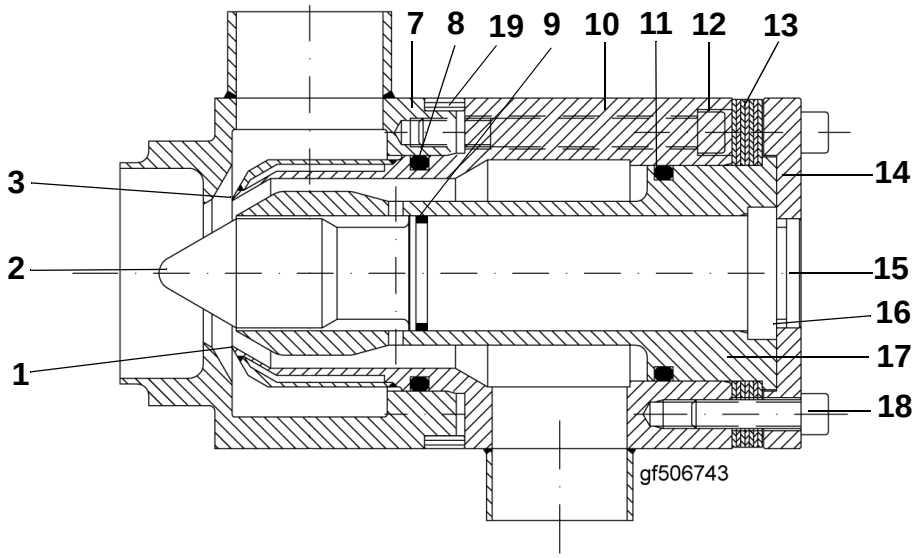

1	Product inlet edge	7	Steam housing	13	Shim(s)
2	Guide spindle nose	8	O-ring	14	Flange
3	Control sleeve edge	9	O-ring	15	Guide spindle
4	Pipe	10	Product inlet	16	Groove
5	Gasket	11	O-ring	17	Control sleeve
6	Nut	12	Screw	18	Screw
				19	Distance sleeve

2.2TF000664.EN

Spare parts

Connection: w51/sms76

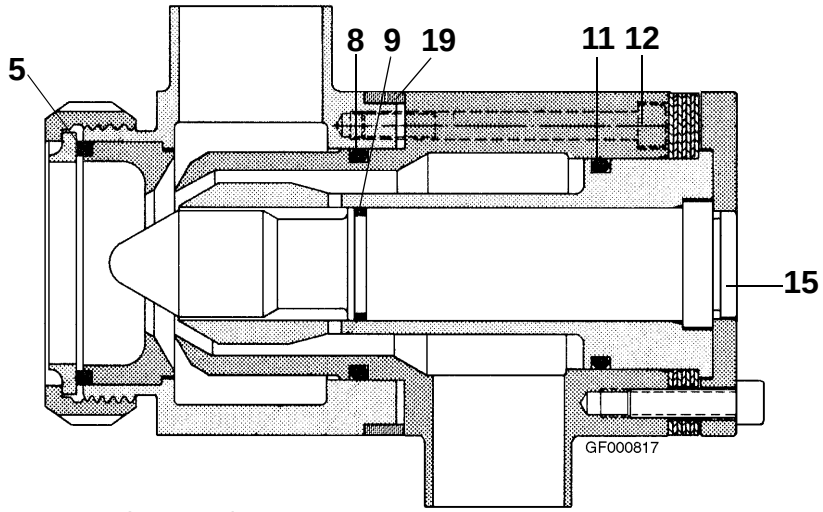

Connection: w51/w77

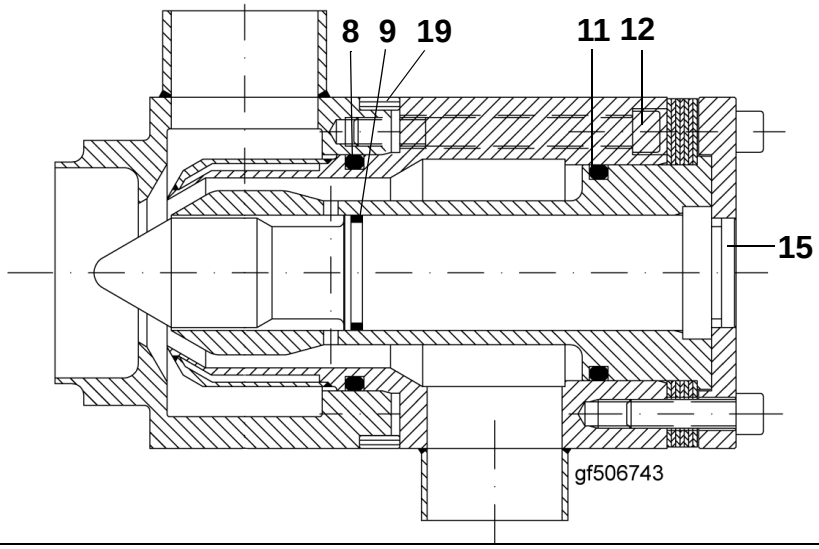

2.2TF000665.EN

Component article No.	Spare part Article No.	Description	Included parts	Pos.	Qty.
6-32422-0221-1	6-31317-0380-3	Gasket	76.1 mm, EPDM	5	1
6-32422-0221-1 6-32422-0336-1	90522-3727	O-ring	69.2x5.7, EPDM	8	1
	90522-3724	O-ring	34.0x3.0, EPDM	9	1
	90522-3728	O-ring	64.2x5.7, EPDM	11	1
	6-32422-0235-1	Screw	M10x97	12	4
	6-32422-0234-1	Distance sleeve	122x113x14mm	19	1
	6-32422-0227-1	Guide spindle	C8 - C12	15	1

This page intentionally left blank

2.2TF000665.EN

Tetra Pak

Maintenance & Spare Parts

Strainer
(Alfa Laval Flow)
LKVF

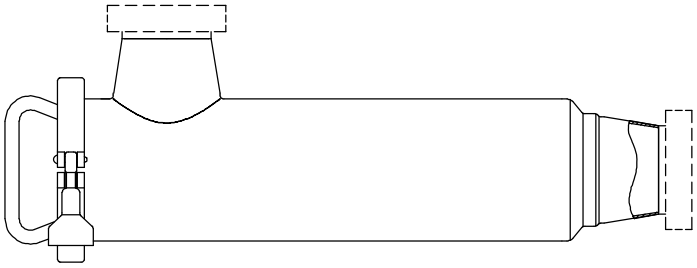

GF001171

1.0 1241301-0101.fro

Tetra Pak

Doc No. 1241301-0101

Strainer

LKVF

This document refers to components specified in Technical Manual, on Maintenance & Spare Parts CD/DVD or on Tetra Pak Intranet.

1.0 1241301-0101.fro

Version 02 Issue 2016-11

Doc No. 1241301-0101

Tetra Pak

Tetra Pak Processing Systems AB

Table of contents

Function description 1

General 1

Maintenance 2

Strainer 2

Change seal ring and filter element 2

Clean filter element 3

Spare Parts 4

This page intentionally left blank

Function description

General

The LKVF, coarse strainer, is intended for removal of particles from a flow to protect pumps or other sensible equipment.

Use the end connection (1) as inlet and the side connection (2) as outlet. The particles strained off will gather inside the filter element (4) which facilitates cleaning, especially if the handle (3) points downwards or if the strainer is horizontally installed. However, both flow directions may be used.

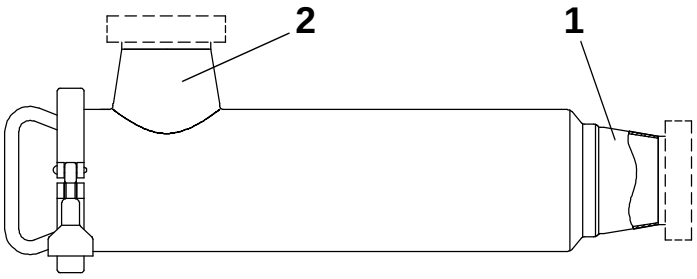

GF001171

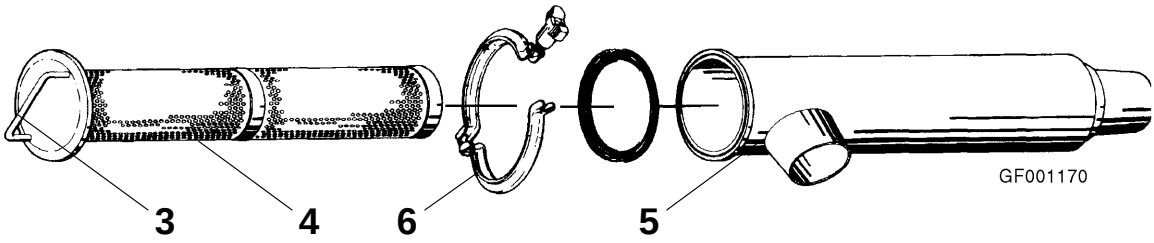

GF001170

2.2TF000864.EN

1 End connection
2 Side connection
3 Handle
4 Filter element
5 Casing
6 Clamp

Maintenance

Strainer

Change seal ring and filter element

WARNING!

Risk of injury!
Make sure before disassembling that the system is drained and free from media.

Note! If the strainer is mounted vertically with the handle (2) downwards, there will be some product left after a draining attempt. This product will drain when opening the clamp.

Disassemble

a) Loosen the wing nut (1).

b) Remove the clamp (4) by opening the two clamp halves.

c) Remove the filter element (3) by grasping it by the handle (2) and pulling it straight out from the casing (6).

d) Remove the seal ring (5).

e) Clean the parts carefully.

Assemble

a) Fit the new seal ring (5) to the casing (6).

b) Slide the new filter element (3) into the casing (6).

c) Fit the clamp (4) and tighten the wing nut (1).

2.2TF000865.EN

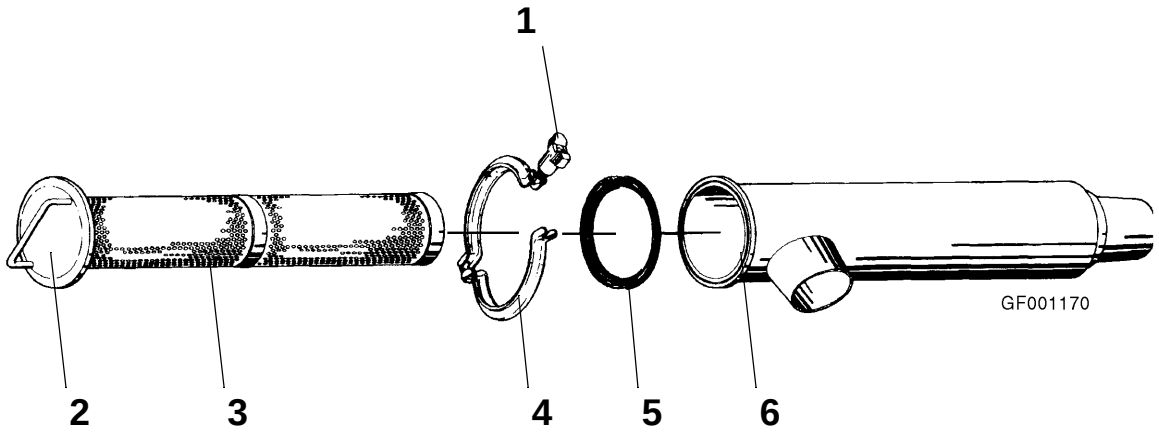

1 Wing nut
2 Handle
3 Filter element
4 Clamp
5 Seal ring
6 Casing

Clean filter element

a) Pull out the filter element according to Change seal ring, Disassemble.

b) Rinse carefully with water.

c) Make sure that the seal ring is in place. Assemble in the reverse order.

2.2TF000865.EN

Spare Parts

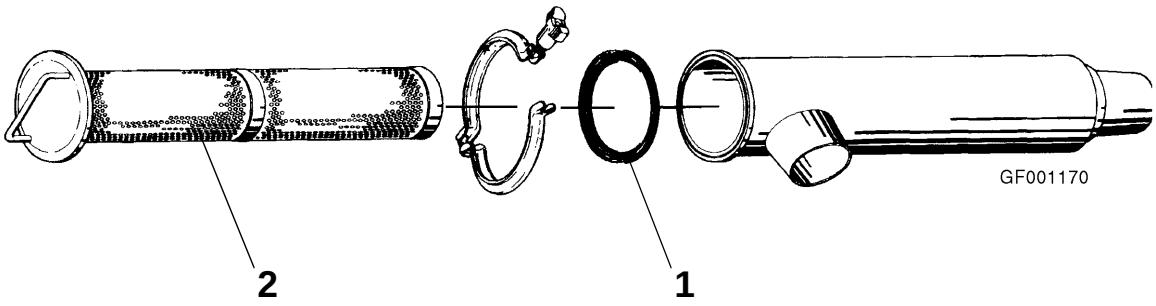

DN	Spare Part Article No.	Description	Pos.	Qty.
25 / 38 / 51	6-9611-99-1361 6-9611-99-0768 6-9611-99-1406	Seal ring, EPDM Seal ring, NBR Seal ring, PTFE	1	1
63.5 / 76.1	6-9611-99-1363 6-9611-99-0770 6-9611-99-1408	Seal ring, EPDM Seal ring, NBR Seal ring, PTFE	1	1
25 / 38 / 51	6-9612-19-0601	Filter element, ø1.0mm	2	1
63.5 / 76.1	6-9612-19-1401			
25 / 38 / 51	6-9612-19-0603	Filter element, ø2.0mm	2	1
63.5 / 76.1	6-9612-19-1403			
25 / 38 / 51	6-9612-19-0605	Filter element, ø3.0mm	2	1
63.5 / 76.1	6-9612-19-1405			

2.2TF000866.EN

This page intentionally left blank

2.2TF000866.EN

Tetra Pak

Maintenance

Vacuum breaker
(Spirax Sarco)

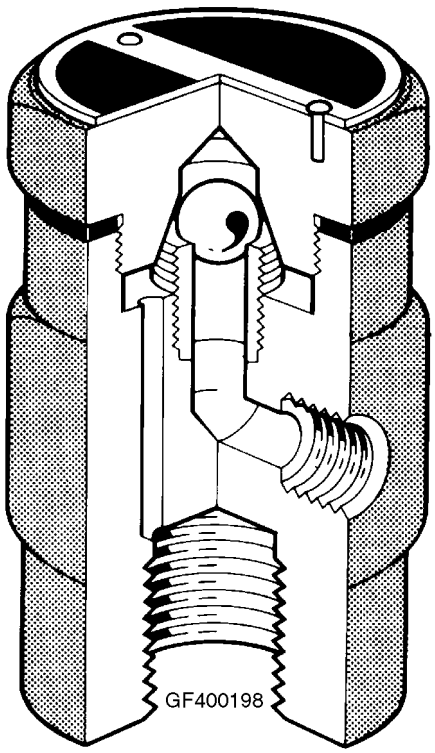

1.0 1248349-0101.fro

Tetra Pak

Doc No. 1248349-0101

Vacuum breaker

Article No.	Connections
31801-5960-1	R 1/2”, air in BSP 1/8”

1.0 1248349-0101.fro

Version 01

Doc No. 1248349-0101

Tetra Pak

Tetra Pak Processing Systems AB

Maintenance **1**

Vacuum breaker **1**

Description 1

Check. 1

Change. 1

1.0 1248349-0101.toc

This page intentionally left blank

Maintenance

Vacuum breaker

Description

The vacuum breaker is made of stainless steel, and can be used on steam or water. When under-pressure is created in a media pipe, the valve ball will open and air will enter the media pipe.

Check

WARNING! **Risk of injury!**
Make sure before dismantling, that the pipeline is drained and free from media.

Check that no media is coming out of the air outlet.

Change

WARNING! **Risk of injury!**
Make sure before dismantling, that the pipeline is drained and free from media.

a) Remove the valve housing (1) by means of a spanner.

b) The new valve has to be installed vertically with the connection facing downwards.

c) When thread mounted, teflon tape shall be used as gasket.

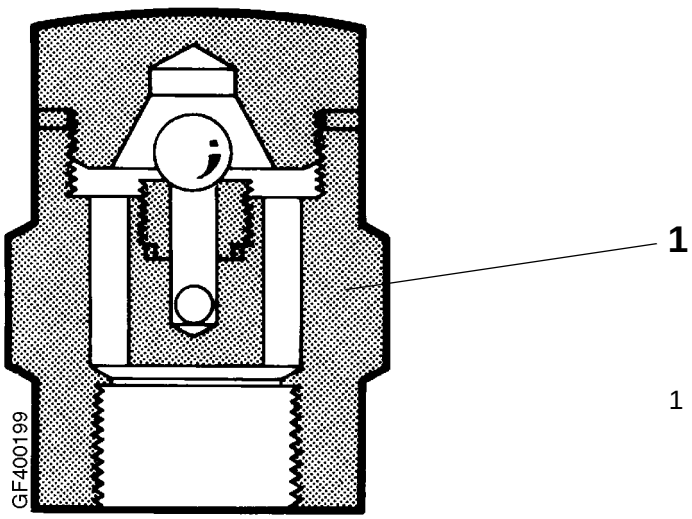

1 Valve housing

2.2TF400049.EN

Tetra Pak

Maintenance & Spare Parts

Strainer
(Spirax/Sarco)

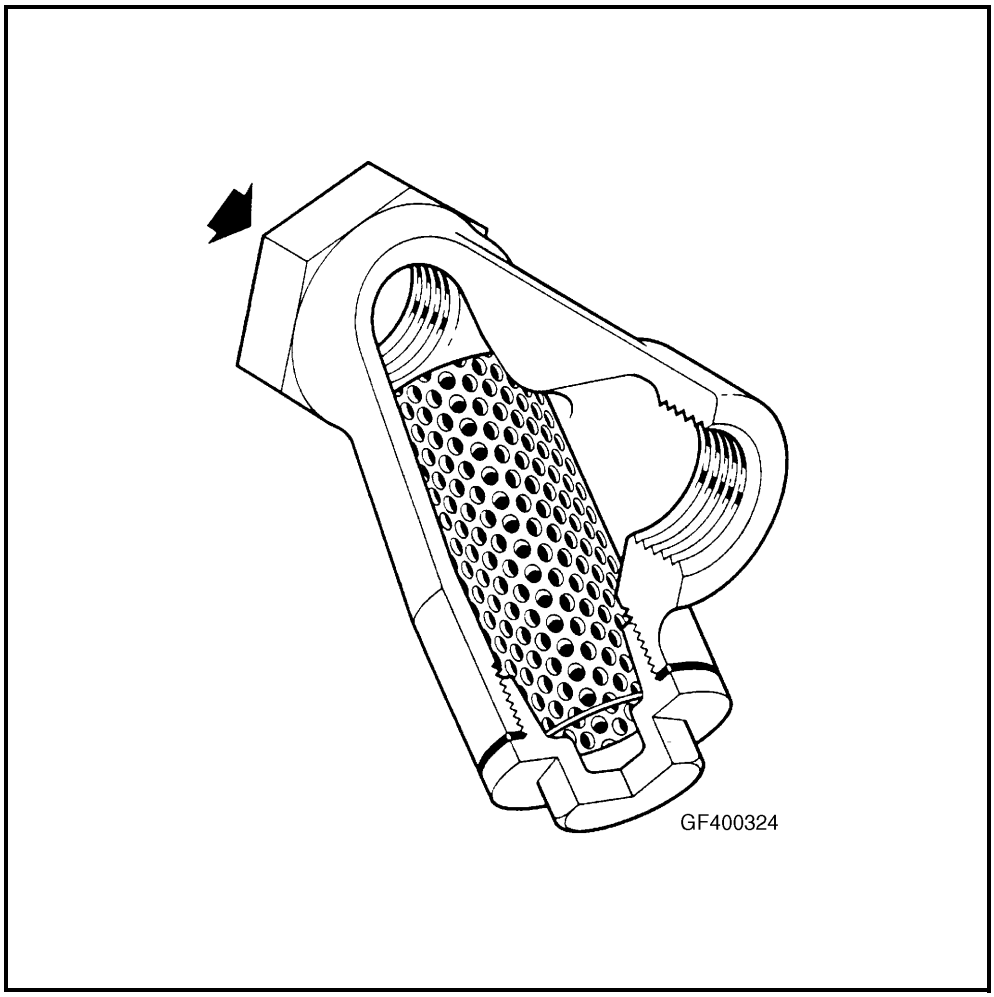

1.0 1248674-0101.fro

Tetra Pak

Doc No. 1248674-0101

Strainer

Article No.	Connection	Type	Material
6-31801-5609-1	1/2"	Fig 12	GGG-40
6-31801-5609-2	3/4"	Fig 12	GGG-40
6-31801-5609-3	1"	Fig 12	GGG-40
6-31801-5609-4	1 1/4"	Fig 12	GGG-40
6-31801-5609-5	1 1/2"	Fig 12	GGG-40
6-31801-5609-6	2"	Fig 12	GGG-40
90503-0975	1 1/2"	Fig 16	316L

1.0 1248674-0101.fro

Version 02 Issue 0606

Doc No. 1248674-0101

Tetra Pak

Tetra Pak Processing Systems AB

Table of contents

Maintenance 1

Strainer 1

Description 1

Check. 1

Change. 1

Spare parts 2

1.0 1248674-0101.toc

This page intentionally left blank

Maintenance

Strainer

Description

Iron strainer with standard sieve of stainless steel with 0.8 mm perforations.

Check

WARNING!

Risk of injury!
Make sure before dismantling, that the pipeline is drained and free from media.

Disassemble and check for impurities and mechanical damage.

Change

WARNING!

Risk of injury!
Make sure before dismantling, that the pipeline is drained and free from media.

a) Remove the cap (1).
b) Change all parts in the service kit or clean the strainer (2).
c) Refit in the reverse order.

Tighten the cap according to the table below:

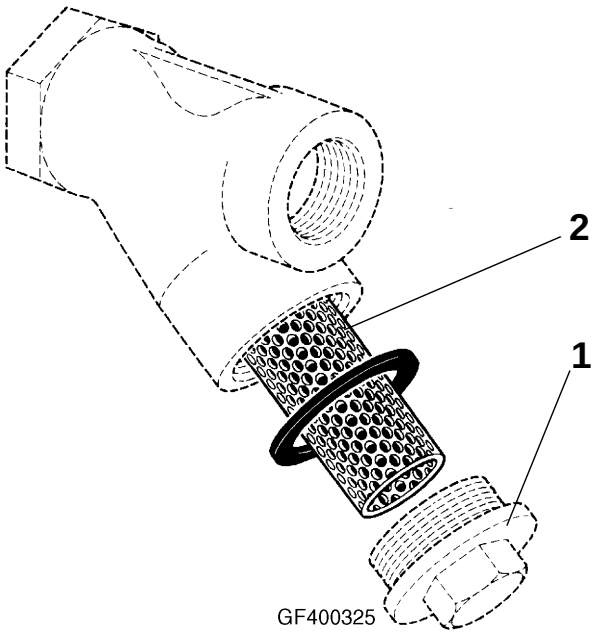

Connection	Torque Nm
1/2"	50/55
3/4"	60/66
1"	100/110
1 1/4"	180/200
1 1/2"	230/250
2"	330/360

1 Cap
2 Strainer

2.2tf400104.en

Spare parts

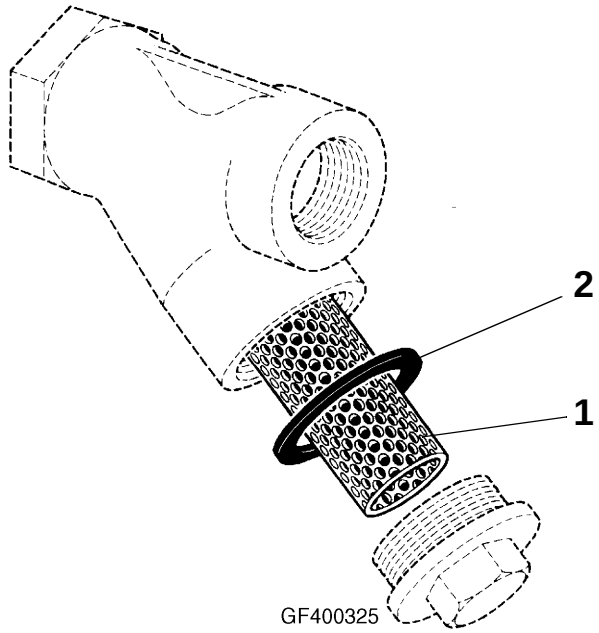

Component Article No.	Pos.	Qty	Spare parts Article No.	Description
6-31801-5609-1	1	1	6-00990411-84	Strainer screen, 0,8
	2	1		Cap gasket
6-31801-5609-2	1	1	6-00990411-85	Strainer screen, 0,8
	2	1		Cap gasket
6-31801-5609-3	1	1	6-00990411-86	Strainer screen, 0,8
	2	1		Cap gasket
6-31801-5609-4	1	1	6-00990411-87	Strainer screen, 0,8
	2	1		Cap gasket
6-31801-5609-5	1	1	6-00990411-88	Strainer screen, 0,8
	2	1		Cap gasket
6-31801-5609-6	1	1	6-00990411-89	Strainer screen, 0,8
	2	1		Cap gasket
90503-0975	1	1	90503-7763	Strainer screen, Mesh 100
	2	1		Cap gasket

2.2tf400105.en

This page intentionally left blank

2.2tf400105.en

Tetra Pak

Maintenance & Spare Parts

Trolley
(Ergoswede)
Goldy 100/70 TP



1.0 3281785-0101.fro

Tetra Pak

Doc No. 3281785-0101

Trolley

Goldy 100/70 TP

Article No.	Capacity (kg)	Surface treatment
90519-0113	100/70	Chromium plated

1.0 3281785-0101.fro

Version 02 Issue 2014-02

Doc No. 3281785-0101

Tetra Pak

Tetra Pak Processing Systems AB

Table of contents

Function Description 1

Check. 2

Maintenance 3

Change Spare Parts 3

Spare Parts 6

Goldy 100/70 TP 6

1.0 3281785.TOC

This page intentionally left blank

Function Description

This trolley is manually operated. It combines table lifter and stacker functionality. The trolley is an aid for lift heights up to 1630 mm and loads up to 70-100 kg depending on lifting height.

DANGER!

Risk of fatal injury!
The equipment shall be used as transport carriage or lift table.
Max load **above** 1200 mm lifting height is 70 kg.
Max load **below** 1200 mm lifting height is 100 kg.

Caution! The trolley is designed for operations in dry environments.

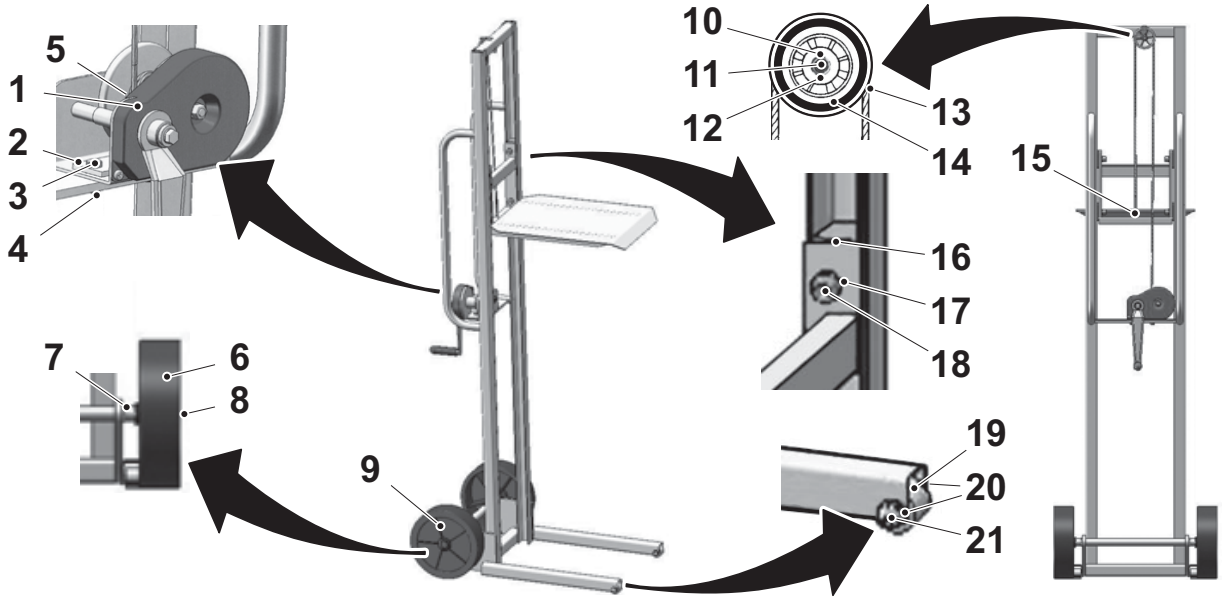

2.2tf508762.en

1 Winch
2 Reinforcement plate
3 Bolt 2 pcs
4 Locknut 2 pcs
5 Wire mounting screw
6 Wheel 2 pcs
7 Shaft
8 Lock washer 2 pcs
9 Hubcap 2 pcs
10 Locknut
11 Bolt
12 Washer
13 Wire
14 Sheave
15 Check-nut
16 Slide block 4 pcs
17 Washer 4 pcs
18 Bolt 4 pcs
19 Front wheel 2 pcs
20 Lock washer 2x2 pcs
21 Shaft 2 pcs

Check

WARNING!

Risk of fatal injury!
Check the equipment before usage.

- Check of worn out or squeezed wire.
- Ensure that the automatic brake works properly.
- Check that there are no other damages to the trolley.
- Check out for missing or damaged safety signs.

Replace any missing or damaged part immediately!

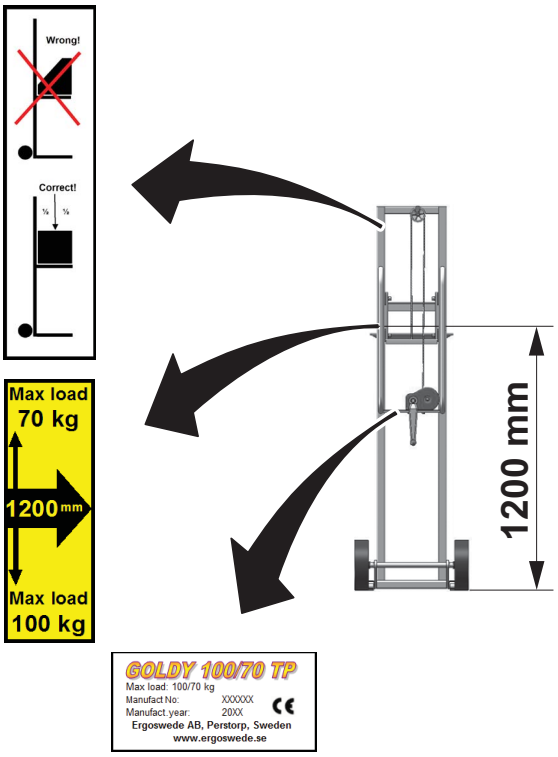

2.2tf5087762.en

Maintenance

Change Spare Parts

Note! It is recommendable to place the trolley on a floor protection sheet, before maintenance.

Change Slide Block Set

a) Loosen the upper bolt (18) and the washer (17) on one side of the trolley.

b) Loosen the lower bolt (18) and the washer (17) on the same side. The two slide blocks (16) will fall down to the floor.

c) Insert new slide blocks (16), washers (17) and bolts (18). Start with the upper slide block.

d) Tighten the bolts (18).

e) Repeat step a) to d) for the other side of the trolley.

Change Front Wheel Set

a) Release the lock washers (20) and pull out the shaft (21).

b) Insert new front wheels (19) and shafts (21).

c) Attach new lock washers (20) with gentle strokes of a hammer.

2.2tf508762.en

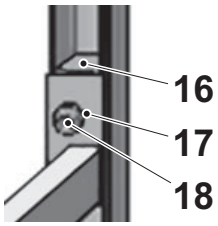

16 Slide block 4 pcs
17 Washer 4 pcs
18 Bolt 4 pcs

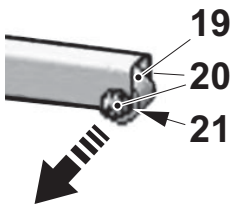

19 Front wheel 2 pcs
20 Lock washer 2x2 pcs
21 Shaft 2 pcs

(Cont'd)

(Cont'd)

Change Rear Wheel Set

Note! Make sure the trolley is tilted to its front.

a) Release the hubcaps (9) and the lock washers (8).

b) Pull out the shaft (7).

c) Insert the new shaft (7) and wheel (6).

d) Attach new lock washers (8) with gentle strokes of a hammer. Make sure there is a distance between the wheel and frame.

WARNING!

Risk that the wheels will fall off!
The lock washers can only be used once.

e) Refit new hubcaps (9)

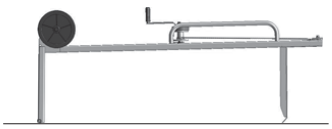

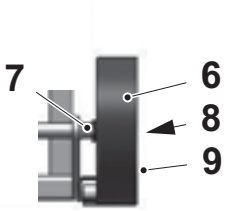

6 Wheel 2 pcs
7 Shaft
8 Lock washer 2 pcs
9 Hubcap 2 pcs

2.2tf5087762.en

(Cont'd)

(Cont'd)

Change Winch and Wire

Note! Make sure the trolley is tilted to its front.

a) Crank out all wire from the winch (1) and loosen the wire mounting screw (5).

b) Untighten the check-nut (15) and loosen the screw at the end of the wire.

c) Loosen the two locknuts (4) and remove the two bolts (3) and the winch (1) with the reinforcement plate (2).

d) Loosen the bolt (11) and remove the washer (12) and sheave (14).

e) Insert the new spare parts. Add grease into the hole of the sheave (14).

f) Reassemble in reverse order.

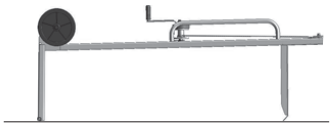

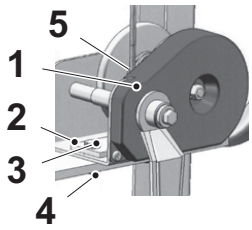

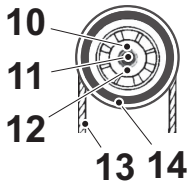

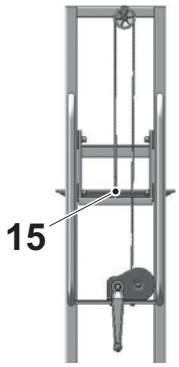

1 Winch
2 Reinforcement plate
3 Bolt 2 pcs
4 Locknut 2 pcs
5 Wire mounting screw
10 Locknut
11 Bolt
12 Washer
13 Wire
14 Sheave
15 Check-nut

2.2tf508762.en

Spare Parts

Goldy 100/70 TP

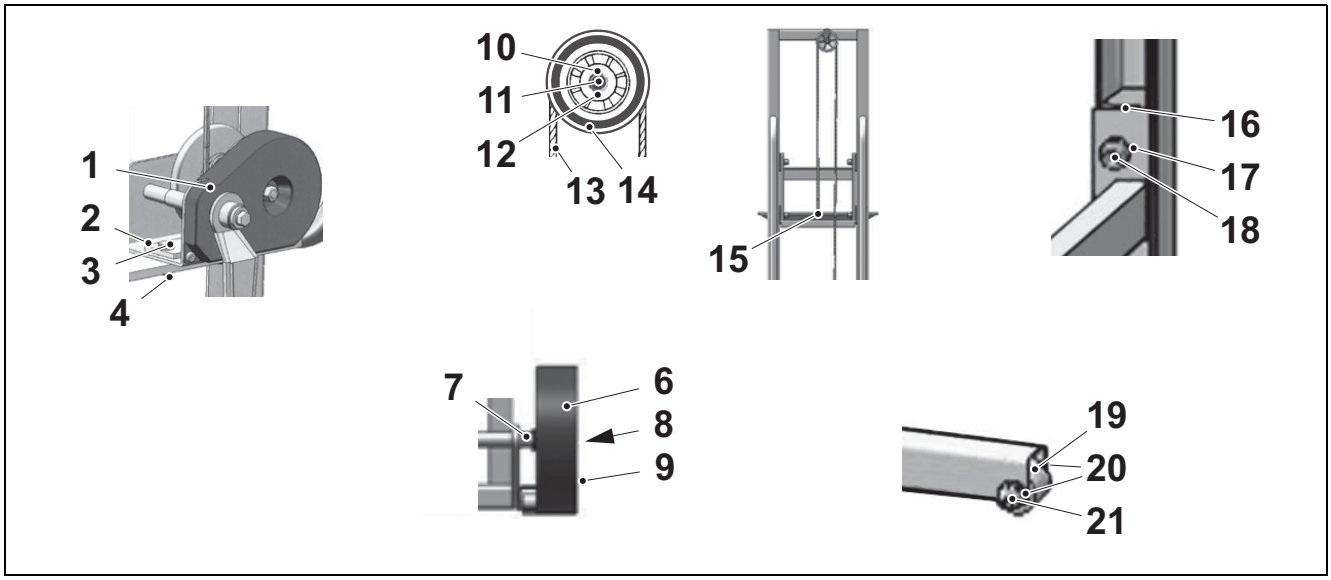

Spare part article No	Description	Included parts	Pos.	Qty
90519-0100	Slide block set	Slide block	16	4
		Washer	17	4
		Bolt 4 pcs	18	4
90519-0101	Front wheel set	Front wheel	19	2
		Lock washer	20	4
		Shaft	21	2
90519-0102	Rear wheel set	Wheel	6	2
		Shaft	7	1
		Lock washer	8	2
		Hubcap	9	2
90519-0103	Winch	Winch	1	1
		Reinforcement plate	2	1
		Bolt	3	2
		Locknut	4	2
90519-0104	Wire	Locknut	10	1
		Bolt	11	1
		Washer	12	1
		Wire	13	1
		Sheave	14	1
		Check-nut	15	1

2.2tf508763.en

This page intentionally left blank

2.2tf508763.en

Tetra Pak

Maintenance & Spare Parts

Pressure Regulator

(SMC Corporation)

AC30

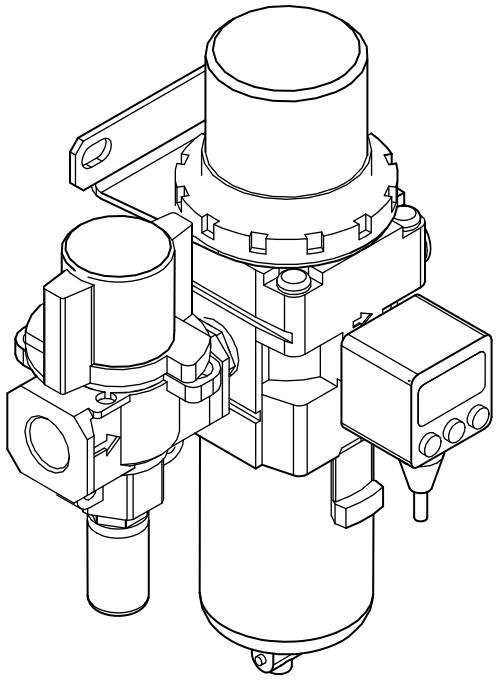

1.0 3283771-0101.fro

Tetra Pak

Doc No. 3283771-0101

Pressure Regulator

AC30

Article No.	Pressure range	Type
90519-8606	1.5-10 bar	Pressure switch ISE40A

1.0 3283771-0101.fro

Version 01 Issue 2015-06

Doc No. 3283771-0101

Tetra Pak

Tetra Pak Processing Systems AB

Table of contents

Function Description 1

Maintenance 2

Change Filter Element 2

Change Pressure Switch 3

Programming the Set-Points 4

Measurement Mode 4

Zero-Clear of Display 4

Pressure Setting 5

Function Selection Mode 6

Clean 10

Troubleshooting 10

Error Indication Function 10

Spare Parts 11

1.0 3283771-0101.TOC

This page intentionally left blank

Function Description

WARNING!

Risk of injury!
Make sure before dismantling that the pipeline is depressurized.

The regulator increase the main line pressure. Desired pressure increase can be adjusted and combined with the pressure relief valve, pressure can easily be exhausted.

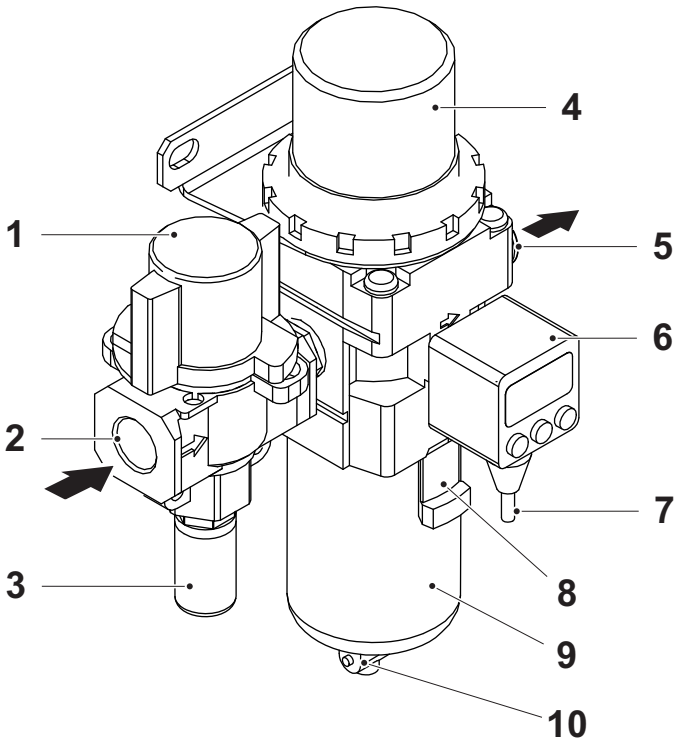

1	Relief valve	6	Pressure switch
2	Inlet	7	Cable
3	Silencer	8	Lock button
4	Regulator	9	Air filter bowl
5	Outlet	10	Drain

2.2tf509171.en

Maintenance

Change Filter Element

WARNING!

Risk of injury!
Make sure before dismantling that the pipeline is depressurized.

Replace the element every 2 years or when the pressure drop becomes 0.1 MPa, whichever comes first, to prevent damage to the element.

a) Push the lock button (1) downwards to release the bayonet catch of the bowl (2).

a) Turn the bowl (2), clockwise or anti-clockwise, with a 40° turn and pull down. If necessary, empty the bowl.

b) Change the filter element.

c) Reassemble in reverse order.

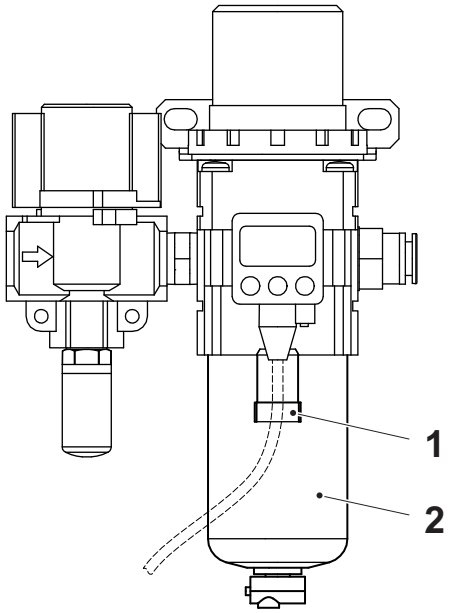

1 Lock button
2 Air filter bowl

2.2tf509171.en

Change Pressure Switch

WARNING!

Risk of injury!
Make sure before dismantling that the pipeline is depressurized.

Risk of electrical shock!
Always disconnect supply circuits prior to changing any parts.

Disassemble

a) Unscrew and loosen the connector (5)

b) Loosen the pipe fitting (2) and separate the pressure switch (4) from the regulator (1).

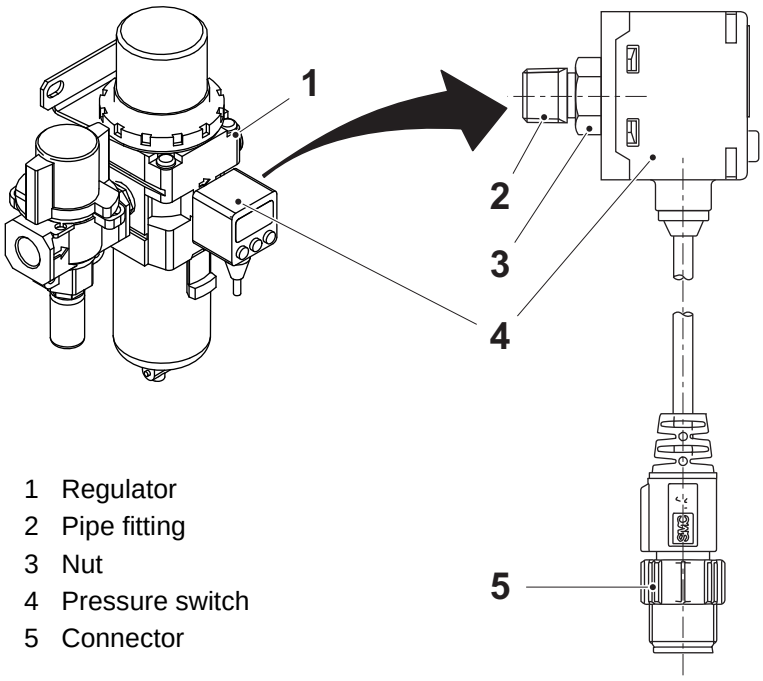

1 Regulator
2 Pipe fitting
3 Nut
4 Pressure switch
5 Connector

Reassemble.

Note! Do not exceed the screw-in torque of 7 to 9 Nm when connecting the switch to the regulator. Exceeding this torque may cause the switch to malfunction.

a) Wrap PTFE tape on the threads of the pipe fitting (2).

b) Fit the pressure switch (4) to the regulator (1) and thighten the nut (3).

c) Refit the connector (5).

2.2tf509171.en

Programming the Set-Points

Measurement Mode

The measurement mode is the condition where the pressure is detected and indicated, and the switch function is operating.
This is the basic mode, and other modes should be selected for setting change and other function setting changes.

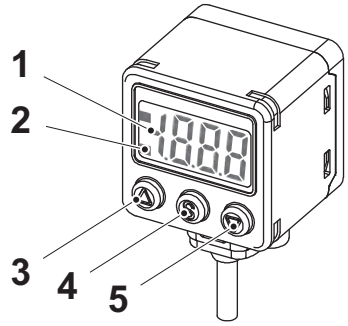

1 LCD Display
2 Indicator light
3 Button (UP)
4 Button (SET)
5 Button (DOWN)

a) Press the (SET) button for 1 second to toggle between:

- Show standard product
- Show unit specification
- Show the product
- Show the pressure range

2.2tf509171.en

Zero-Clear of Display.

Note! For the first operation, always perform zero-clear with no pressure applied.

Simultaneously

Press (UP)
Press (DOWN)

1 second



.000

Pressure Setting

Set ON and OFF point of the Pressure switch.

Operation

When the pressure exceeds a set value, the Pressure switch will be turned ON.
When the pressure falls below the set value by the amount of hysteresis or more, the Pressure switch will be turned OFF.
The default setting of the output set value is the centre value between the atmospheric pressure and the upper limit of the rated pressure range.

How to Operate

(Hysteresis mode)

a) Press the (UP) button once in measurement mode.

b) [P_1] or [n_1] and set value are displayed in turn.

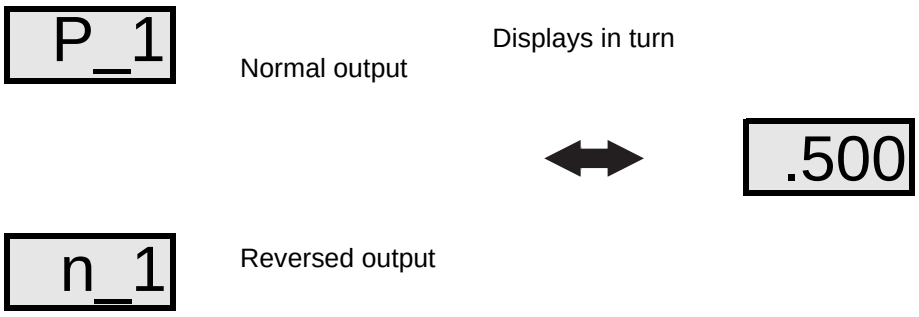

2.2ff509171.en

c) Press the (UP) or (DOWN) button to change the set value.
The (UP) button is to increase and the (DOWN) button is for decrease.

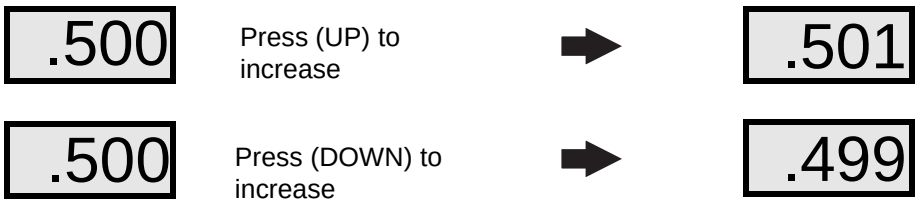

Note! Press once for one digit, or press continuously to keep increasing/decreasing the set value.

(Cont'd)

(Cont'd)

d) Press the (SET) button to finish the setting of OUT1.

e) For [P_2] and [n_2]. Set as above.

(Window comparator mode)

The Pressure switch operates within a set pressure range (from P1L to P1H) during window comparator mode. Set P1L (switch lower limit) and P1H (switch upper limit) with the setting procedure above.
When reversed output is selected, [n1L] and [n1H] are displayed.

Function Selection Mode

Default setting

At the time of shipment, the following settings are provided. If this condition is acceptable, then keep these settings. To change setting, enter function selection mode.

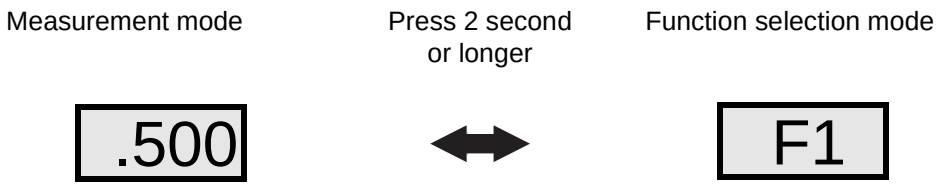

2.2tf509171.en

Note! Some functions are not available depending on part number. All functions are displayed with [F#] followed by the function description. If a function is not available, the function is displayed as [---].

[F0] Unit selection function

a) Press the (UP) or (DOWN) button until the display shows the desired unit.

b) Press the (SET) button to select.

Unit	LED display
Mpa	**nPA**
kPa	**PA**
kgf/cm^2	**GF**
bar	**bAr**
psi	**PSi**

(Cont'd)

(Cont'd)

[F1] Setting of OUT1

Output turns on when the pressure exceeds the set value. The default setting of output set value is a centre value of between atmospheric pressure and upper limit of the rated range. Display colour depends on OUT1 condition. The default setting of display colour is as follows, green lights up when output is turned on and red lights up when output is turned off.

a) Press the (UP) or (DOWN) button until the display shows the desired item.

b) Press the (SET) button to select.

Item	LED display	Description	LED display	Description
Output mode	**oU1**	Select hysteresis mode window comparator mode, or OFF mode.	**HYS**	Hysteresis
			Uin	Window comparator
			oFF	OFF
Reversed output	**1ot**	Select reversed output.	**1_P**	Normal output
			1_n	Reversed output
Pressure setting, see page 5	**P_1**	Set the ON or OFF value of the switch output.	**1_P**	Set the value
			n_1	Set the value
Hysteresis	**HYS**	Set the hysteresis to prevent chattering	**H_1**	Set the value
Display colour	**CoL**	Select the display colour.	**SoG**	ON: Green OFF: Red
			Sor	ON: Red OFF: Green
			rEd	Normally: Red
			Grn	Normally: Green

(Cont'd)

2.2tf509171.en

(Cont'd)

[F2] Setting of OUT2

Output turns on when the pressure exceeds the set value. The default setting of output set value is a centre value of between atmospheric pressure and upper limit of the rated pressure range.

Note! Display colour depends on OUT1, and is not set with this function.

a) Press the (UP) or (DOWN) button until the display shows the desired item.

b) Press the (SET) button to select.

Item	LED display	Description	LED display	Description
Output mode	**oU2**	Select hysteresis mode window comparator mode, Error mode, or OFF mode.	**HYS**	Hysteresis
			Uin	Window comparator
			Err	Error
			oFF	OFF
Reversed output	**2ot**	Select reversed output.	**2_P**	Normal output
			2_n	Reversed output
Pressure setting, see page 5	**P_2**	Set the ON or OFF value of the switch output.	**2_P**	Set the value
			n_2	Set the value
Hysteresis	**HYS**	Set the hysteresis to prevent chattering	**H_2**	Set the value

2.2tf509171.en

[F4] Setting of auto-preset

When hysteresis mode is selected, this function can calculate a optimum pressure value automatically based on the on-going operation.

a) Press the (UP) or (DOWN) button until the display shows the desired item.

b) Press the (SET) button to select.

Item	LED display	Description	LED display	Description
Auto-preset	**PrS**	Automatically setting of optimum pressure value	**oFF**	Manual
			on	Automatic

(Cont'd)

(Cont'd)

[F99] Reset of Default Setting

When the setting of the Pressure switch becomes unsure, the default setting can be returned.

a) Press the (UP) or (DOWN) button until the display shows the desired item.

b) Press the (SET) button to select.

Item	LED display	Description	LED display	Description
Default setting	**ini**	Reset to the default setting	**oFF**	Unused selected
			on	Reset to the default setting

2.2tf509171.en

Clean

Do not use solvents such as benzene, thinner and so on, to clean the Pressure switch. They could damage the surface of the body and erase the markings on the body. Use a soft cloth to remove stains. For heavy stains, use a cloth soaked with diluted neutral detergent and fully squeezed, then wipe up the stains again with a dry cloth.

Troubleshooting

Error Indication Function

This function is to display error location and content when a problem or an error occurs.

Error name	LED display	Description	Action
Over current Error	**Er1**	The switch output load current is more than 80 mA.	Turn the power off and remove the cause of the over current. Then turn the power on.
	Er2		
Residual Pressure Error	**Er3**	During zero-clear operation, pressure above ±7%F.S. (±3.5%F.S. for compound pressure) has been applied. After 1 second, the mode will return to measurement mode. The zero clear range can vary ±1%F.S. with individual product differences.	Perform zero-clear operation again after restoring the applied pressure to an atmospheric pressure condition.
Pressurizing Error	**HHH**	Pressure has exceeded the upper limit of the set pressure range.	Reset applied pressure to a level within the set pressure range.
	LLL	Pressure has exceeded the lower limit of the set pressure range.	
Auto-shift Error	**o.r**	The measured pressure at auto-shift input exceeds the set pressure range.	Auto-shift input is invalid. Check the connected equipment and machine.
System Error	**Er0**	Displayed in the case of an internal data error.	Turn the power off and turn it on again.If resetting fails, contact supplier.
	Er4		
	Er6		
	Er7		
	Er8		
	Er9		

2.2tf509171.en

Spare Parts

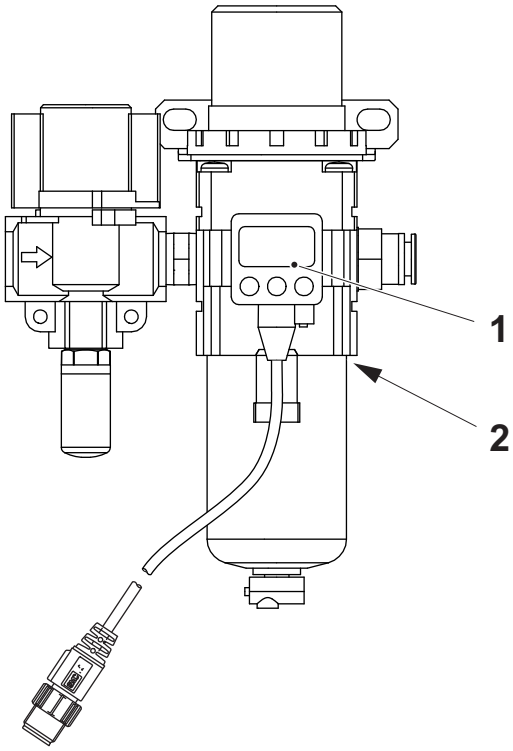

2.2tf509172.en

Component article No.	Spare part article No.	Description	Pos.	Qty
90519-8606	90519-8601	Pressure switch, R 1/8, M12	1	1
	90510-8980	Filter element, 5 µm	2	1

Tetra Pak

Maintenance & Spare Parts

Safety Signs
(Tetra Pak)

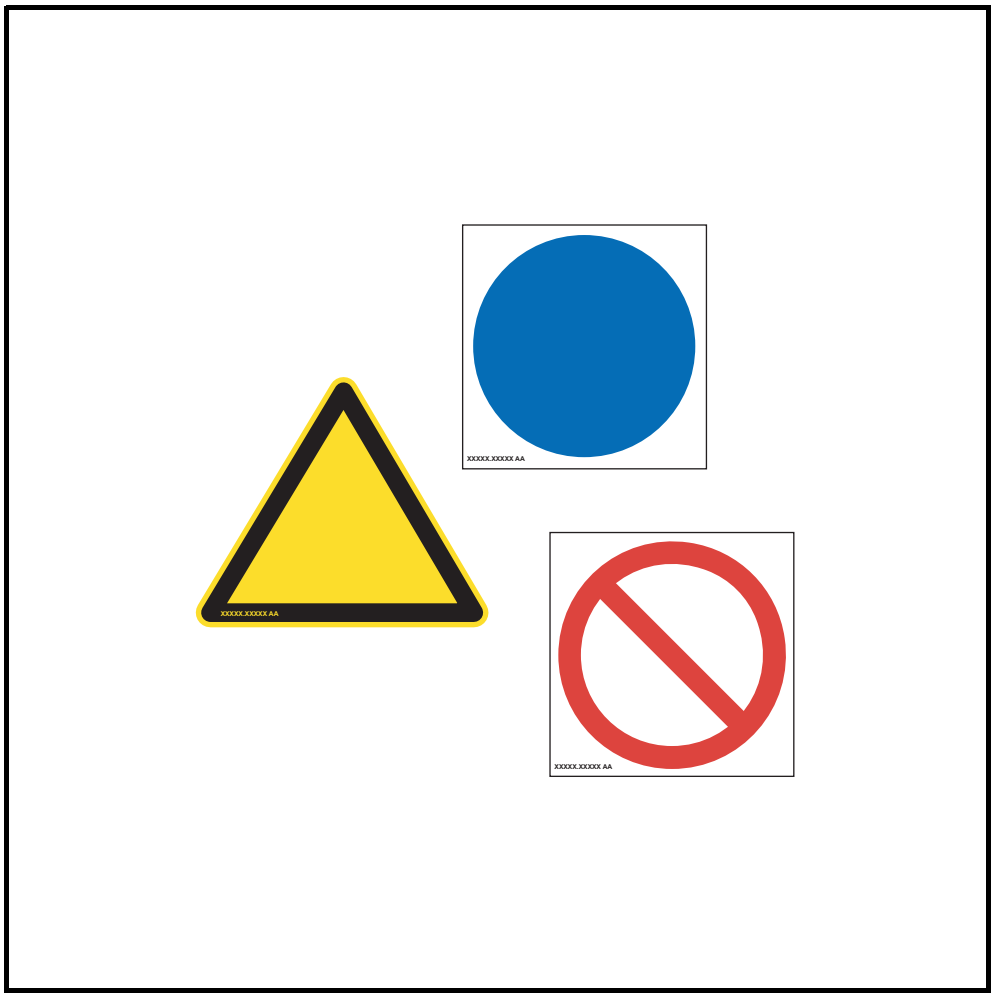

1.0 3284690-0101.fro

Tetra Pak

Doc No. 3284690-0101

Safety Signs

This document refers to components specified in Technical Manual, on Maintenance & Spare Parts CD/DVD or on Tetra Pak Intranet.

1.0 3284690-0101.fro

Version 01 Issue 2016-11

Doc No. 3284690-0101

Tetra Pak

Tetra Pak Processing Systems AB

Table of contents

Function Description 1

General 1

Maintenance 2

Check. 2

Change. 2

Clean 2

Spare Parts 3

Safety Signs ISO 3

1.0 3284690-0101.TOC

This page intentionally left blank

Function Description

General

Safety signs are there to make you aware of the risks applicable to the machine. If the signs are missing or damaged, they can not fulfil this function.

Safety signs are attached to the equipment.

ISO Safety Sign (example)

International organisation for standardisation

Warning sign	Mandatory sign	Prohibition sign
		

Supplementary Signs
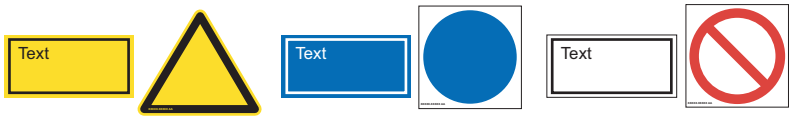

2.2tf509304.en

ANSI Safety Sign (example)

American National Standards Institute

Danger	Warning	Caution	
		Person	Property
			

Maintenance

Check

Regularly inspect that the safety signs are in a good shape, visible and clean.

Change

Safety signs need to be updated

The need for a change to a safety sign depends on several reasons. A change could also be done to make all the safety signs more consistent if necessary.

Reason	Type of change
Damage, missing or worn	Replace the sign
Sign not up to date	Replace with a updated sign
Incorrect placement	Move sign to the correct placement
Sign not used anymore (only on “old” equipment).	Remove sign

Clean

If necessary clean the safety sign from oil, grease or dirt with a suitable detergent.

2.2tf509304.en

Spare Parts

Safety Signs ISO

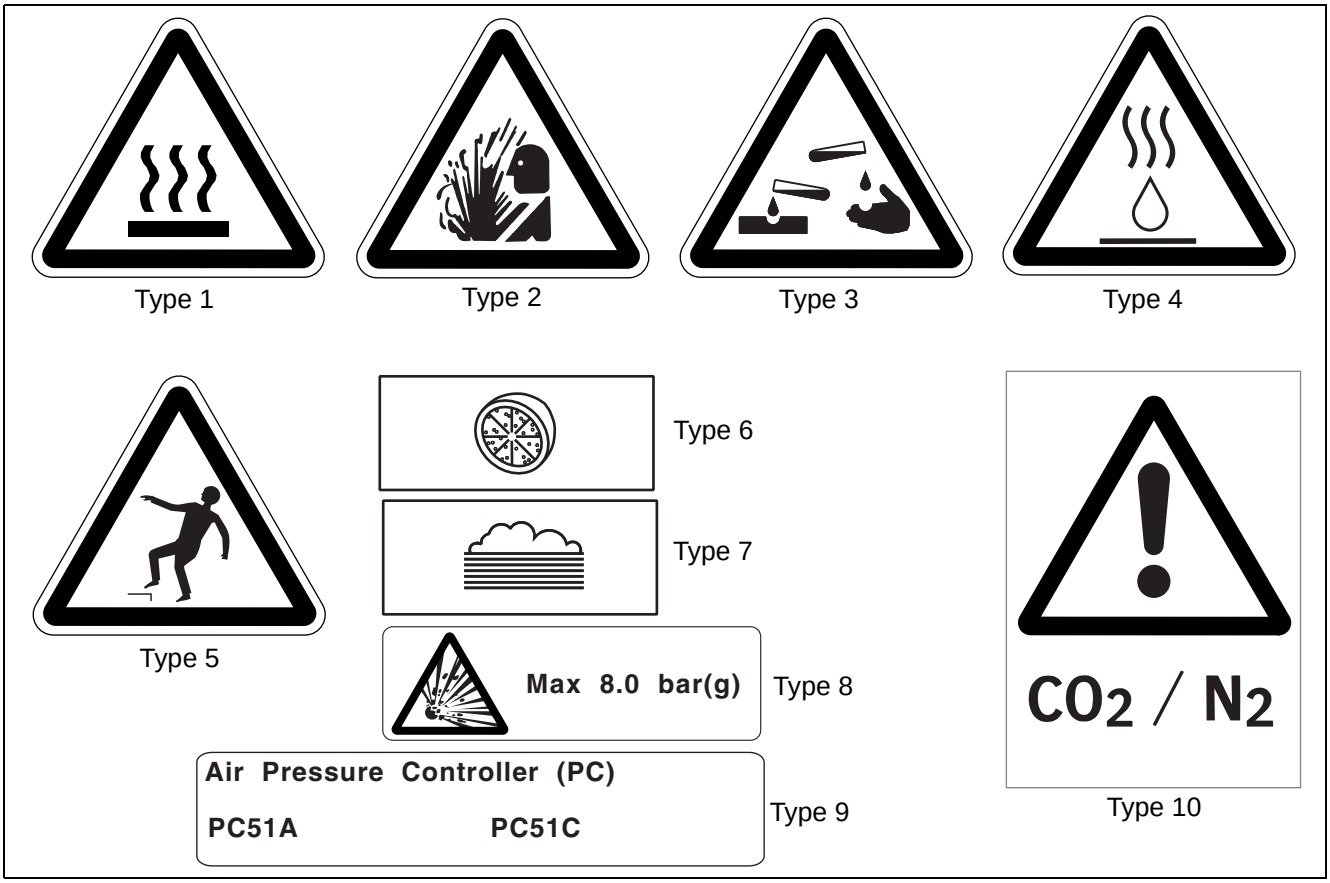

2.2tf509305.en

Type	Spare part article No.	Denomination	Description
1	90194-0143	Hot Surface	Self adhesive plastic film, 30x30 mm
	359705-0008	Hot Surface	Self adhesive plastic film, 100x100 mm
	359710-0001	Hot Surface	Self adhesive aluminium, 50x50 mm
	359710-0002	Hot Surface	Self adhesive aluminium, 100x100 mm
2	359705-0017	Hot Cor.Subst. U H P	Self adhesive plastic film, 50x50 mm
	359705-0018	Hot Cor.Subst. U H P	Self adhesive plastic film, 100x100 mm
3	90194-0141	Dangerous Chemicals	Self adhesive plastic film, 74x74 mm
4	90459-7583	Hot Outlets	Self adhesive plastic film, 50x50 mm
5	90459-0631	Risk Of Falling	Self adhesive plastic film, 100x100 mm
6	6-35924-14-53	Sign acid	Double-sided tape
7	6-35924-14-54	Sign alkali	Double-sided tape
8	6-34144-8571-1	Air pressure for V51	Self adhesive plastic film
9	6-34144-8572-1	Open route	Self adhesive plastic film
10	90503-8592	CO2/N2	A6 Yellow

Tetra Pak