UNIFILLER®

Slab Line

Controls Operation Manual

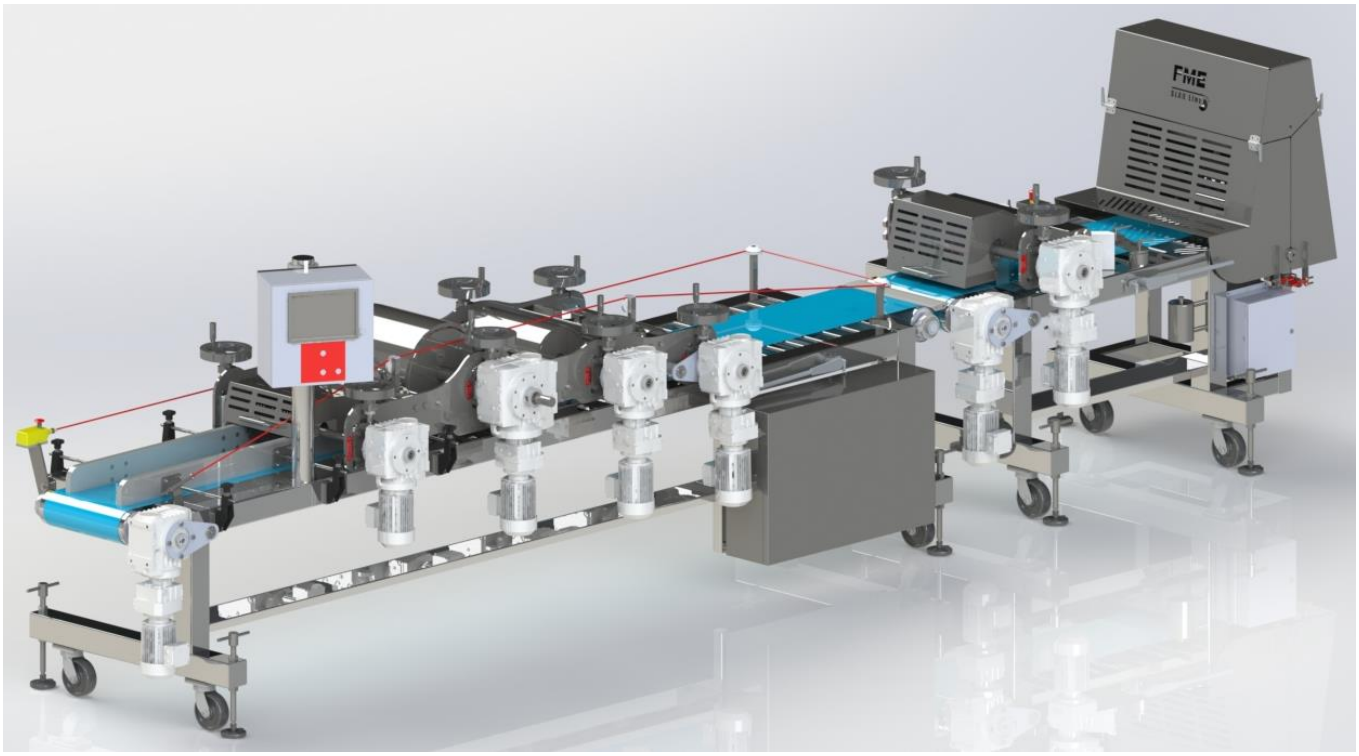

FME

Table of Contents

IMPORTANT SAFETY INFORMATION **5**

1. A) GENERAL INFORMATION **6**

1. B) SLABLINE DESIGNED USE **6**

2. GENERAL OPERATION **6**

3. A) SAFETY GUIDELINES DEFINITIONS **8**

3. B) IMPORTANT SAFE PRACTICES FOR SLABLINE **8**

A) GAUGE ROLLERS 9
B) ROUND CUTTER BLADES 9
C) GUILLOTINE KNIFE 9
D) CONVEYOR BELT AND PULLEYS 10
E) ROTATING BRUSH 10
F) CLOSING SAFETY GUARDS 10

4. LOCK-OUT PROCEDURES **11**

5. CHILDREN **12**

6. GENERAL SERVICE **12**

7. GENERAL SAFETY WARNINGS AND INSTRUCTIONS FOR THE SLABLINE **12**

8. CHECK FOR DAMAGED PARTS. **13**

9. AREAS THAT REQUIRE CARE AND ATTENTION DURING OPERATION **14**

A) GAUGE ROLLERS 14
B) ROUND CUTTER BLADES 15
C) GUILLOTINE KNIFE 15
D) TAB SCRAPERS 16
E) ROTATING BRUSH 16
F) COMPRESSION ROLLER SCRAPERS 17

POWER REQUIREMENTS **18**

ELECTRICAL 18
COMPRESSED AIR 18

CONTROLS LAYOUT **19**

CONTROL BOX LAYOUT 19
SCREEN HIERARCHY 20
SCREEN HIERARCHY (CONTINUED) 21
SCREEN HIERARCHY (CONTINUED) 22
SCREEN HIERARCHY (CONTINUED) 23

CONTROL SYSTEM DESCRIPTION **24**

HELP PANE 24
MAIN STARTUP SCREEN 25
MAIN STARTUP SCREEN CONTINUED… 26
GAUGE ROLLER STATION SCREEN 27

BRUSH STATION SCREEN 28
MAIN CONVEYOR STATION SCREEN 29
GUILLOTINE CONVEYOR STATION SCREEN 30
GUILLOTINE STATION SCREENS 31
CUTTER STATION SCREEN 32
RECIPE SELECTION SCREEN 33
MODE SCREEN 35
STATISTICS SCREEN 36
STATISTICS SCREEN CONTINUED… 37
CLEAN SCREEN 38
LOGIN SCREEN 39
SYSTEM SCREEN 40
TECHNICAL SCREEN 41
TECHNICAL SCREEN CONTINUED… 42
NEW PASSWORD SCREEN 43
DIAGNOSTICS SCREEN 44
DIAGNOSTICS OUTPUTS (DISCREET) SCREEN 45
DIAGNOSTICS OUTPUTS (ANALOG) SCREEN 46
DIAGNOSTICS INPUTS (DISCREET) SCREEN 47
DIAGNOSTICS INPUTS (ANALOG) SCREEN 47
WARNINGS, ALARMS, AND DIAGNOSTICS 48

MITSUBISHI VFD SETTINGS **52**

CLEANING AND DISASSEMBLY **53**

EMPTY PRODUCT FROM MACHINE 53
REMOVING THE SLABLINE CONVEYOR BELTS 54
1. COMPRESSOR ROLLER CONVEYOR BELT 54
COMPRESSOR ROLLER CONVEYOR BELT REMOVAL CONTINUED… 55
2. GUILLOTINE CONVEYOR BELT 56
GUILLOTINE CONVEYOR BELT REMOVAL CONTINUED… 57
GUILLOTINE ROUND CUTTER BLADE REMOVAL 58
ROUND CUTTER BLADES REMOVAL CONTINUED… 59
CONVEYOR BELT TRACKING AND TIGHTENING 61
COMPRESSOR ROLLER BELT ADJUSTMENT 61
GUILLOTINE BELT ADJUSTMENT 61

PREVENTATIVE MAINTENANCE **62**

ROUTINE MAINTENANCE 62
Daily Maintenance *62*
Weekly Maintenance *62*
Tri-Monthly Maintenance *62*

SPARE PARTS LIST **63**

MECHANICAL SPARE PARTS 63
ELECTRICAL SPARE PARTS 64
PNEUMATIC SPARE PARTS 64

SPARE PARTS ILLUSTRATIONS **65**

SPARE PARTS ILLUSTRATIONS **65**

CE MARK **66**

Introduction

Thank you for purchasing this equipment from Unifiller Systems Inc. We strive to manufacture the world's best food manufacturing equipment, using the latest technology and components available, and we are sure you will get years of trouble free use, and excellent productivity from your new investment.

Please take a few minutes to read this manual to become familiar with the layout of the controls, and the set up and operating procedure.

Please do not hesitate to contact us if you have any questions regarding the setup, maintenance or operation of your equipment.

Telephone: (604)-940-2233

Fax: (604)-940-2241

Unifiller Systems Inc.
7621 MacDonald Road
Riverpointe Business Park
Delta, BC
V4G 1N3

FME Food Machinery Engineering Ltd.
#8 19158 94th Ave
Surrey, BC
V4N 4X8
604-888-8686

OR,

Contact your local authorized Unifiller dealer.
Please see our website for dealer contact information @ www.unifiller.com
Please remember to supply your company name, telephone number, email and a contact name when ordering parts.

IMPORTANT SAFETY INFORMATION

All machines have a risk of personal injury wherever moving parts are involved in their operation. Unifiller Systems has taken all possible precautions to reduce and eliminate the dangers associated with moving parts. Having all users read and abide by the instructions in this manual will further reduce the risk of any personal injury. All users must familiarize themselves with the warning decals located around the machinery.

IMPORTANT: All Stainless Steel parts are coated with a protective coating at the factory and therefore any Stainless Steel parts that may come into contact with product must be washed first.

- **Operators must have been trained; either in person, by a video demonstration or having read the manual prior to operating machinery.**
- **Turn off and lock out the main electrical power and pneumatic disconnect sources from the equipment prior to cleaning, dismantling or adjusting the equipment.**
- **Always isolate and bleed pressure from air supply prior to disconnecting air lines.**
- **Operators should be familiar with all automated motions of machinery. No reaching or placement of hands within the utilized space at any time while the machine is in operation.**
- **Operators must ensure that dress attire is appropriate. Secure all loose clothing/hair and remove any personal jewelry.**
- **Safety guards or devices must not be removed or disabled by any personnel other than when locked out for service maintenance by a technician.**
- **Operators must not leave their workplace while machinery is still running.**
- **Caution - the air lines on this machine are under very high pressure. Severe injury could result if tampering or adjustments are made by non-qualified personnel.**
- **Stop machinery and report any unusual, noisy or erratic operation of equipment to your supervisor.**
- **Warning Shock Hazard - always connect this machine to a grounded power source.**
- **Control boxes are not to be opened, or washed with a high pressure hose directed at operator controls or control enclosures**
- **Operators to daily pre-check functional operation of the EMERGENCY STOP button at all locations around equipment.**

1. A) General Information

The documentation is an integral part of the product and it contains important information on operation and service. The documentation is written for all employees who operate, assemble, install, start up and service the SlabLine.

The documentation must be accessible and legible. Make sure that persons responsible for the system and its operation, as well as any person who works on the SlabLine have read through the documentation carefully and understand it fully. If you are unclear about any of the information in this documentation, or if you require further information, contact Unifiller Systems or FME Food Machinery.

1. B) SlabLine Designed Use

The Unifiller/FME SlabLine is designed to create a flat, uniform Slab of material which in turn will be cut into portions in the transverse and transaxle directions to create a consistent sized product with as little manual labour as possible.

Any other products and processes MUST be able to be carried out with all safety guards in place. Any and all adjustments, modifications and deviations to the machine that alter the SlabLine from the intended designed use will therefore result in an unsafe operating environment.

Guards to suit specific products that fall outside of the SlabLine intended designed use may be available – Always contact Unifiller/ FME for information.

2. General Operation

1. Read, understand, and follow all instructions on the SlabLine and in the instruction manual before starting.

2. Only allow responsible adults, who are familiar with the instructions, to operate this SlabLine.

3. Do not operate the SlabLine barefooted or while wearing sandals. Always wear substantial footwear.

4. Do not operate SlabLine without the Brush guard, Round Cutter guard, front Guillotine guard and rear Guillotine guard, or other safety protective devices in place and working. Periodically check all guards, sensors and safety protective devices to ensure they are in good working order and will operate properly and perform their intended function. Replace a damaged latch, guard, sensor or other safety device before further use.

5. Never leave the SlabLine unattended.

6. Operate SlabLine only in daylight or where good artificial light is available when objects in the path of the blades are clearly visible from the operating area of the SlabLine.

7. Do not operate SlabLine while under the influence of alcohol or drugs, or when you are tired or ill. Always stay alert, watch what you are doing, and use common sense.

8. Avoid dangerous environments. Never operate SlabLine when the floor is slippery. Always be sure of your footing; walk; never run.

9. If the SlabLine should start to vibrate abnormally, press the E-Stop immediately, wait for the Round Cutters and motors to stop, follow lock out procedures and then check for the cause. Vibration is generally a warning of trouble.

10. Always wear proper eye protection as well as hand/foot protection when operating the SlabLine.

11. The use of any accessory or attachment not recommended for use with this SlabLine could be hazardous. Only use accessories approved by Unifiller Systems or FME Food Machinery.

12. Never overreach while operating the SlabLine, you could fall into or onto the SlabLine and moving components thereof. Always be sure to keep proper footing and balance at all times while operating the SlabLine.

13. If you see another operator using the SlabLine outside of these safe practices, press the E-Stop immediately. Do not allow the SlabLine to be operated unsafely.

14. Never wear radio or music headphones while operating the SlabLine, operators should be able to hear the machine and be able to notice differences in machine operating noises and therefore, be able to stop the machine in the event of a malfunction.

3. A) Safety Guidelines Definitions

It is important for everyone to read and understand this manual. The information it contains relates to protecting YOUR SAFETY and PREVENTING DAMAGE AND INJURIES. The symbols below are used to help you recognize this information.

SIGNAL WORD	MEANING	CONSEQUENCES IF DISREGARDED
DANGER	IMMINENT DANGER	SEVERE OR FATAL INJURIES
WARNING	POSSIBLE DANGEROUS SITUATION	SEVERE OR FATAL INJURIES
CAUTION	POSSIBLE DANGEROUS SITUATION	MINOR INJURIES
NOTICE	POSSIBLE DAMAGE TO PROPERTY	DAMAGE TO MACHINERY OR ITS ENVIRONMENT

Structure of embedded safety notes:

SIGNAL WORD- Nature and source of Hazard

- Possible consequence(s) if disregarded
- Measure(s) to prevent the danger.

3. B) Important Safe Practices for SlabLine

DANGER	**Indicates a hazardous situation that, if not avoided, WILL result in death or serious injury.**
WARNING	**Indicates a hazardous situation that, if not avoided, COULD result in death or serious injury.**
CAUTION	**Indicates a hazardous situation that, if not avoided, COULD result in MINOR or MODERATE injury.**
NOTICE	**Indicates information considered important but not hazard related.**

A) Gauge Rollers

DANGER **Risk of crush, pinch, laceration and/or dismemberment injury from rotating Compression Rollers.**

- Hands, feet and/or other body parts can become entrapped, crushed or dismembered if caught in the rotating Compression Rollers.

- Never place hands, feet, other body parts or any device into the SlabLine or Compression Roller area.
- Always follow lock out procedures prior to removing a product jam or attempting to retrieve an object from the Compression roller area.

B) Round Cutter Blades

DANGER **Risk of amputation, pinch, laceration and/or dismemberment injury from rotating blade/cutting device.**

- Hands and fingers could be cut or severed by the blade or cutting device.

- Keep hands and fingers out of guarded Round Cutter area.
- Never operate the machine without the Round Cutter guard in place.
- Do not bypass safety sensor on Round Cutter guard.
- Always follow lock out procedures prior to removing guard if you need to access the Round Cutter cutting area.

C) Guillotine Knife

DANGER **Risk of amputation, pinch, laceration and/or dismemberment injury from knife blade/cutting device.**

- Hands and fingers could be cut or severed by the blade or cutting device.

- Keep hands and fingers out of guarded Guillotine Cutting area.
- Never operate the machine without both Guillotine Cutting guards in place.
- Do not bypass safety sensors on Guillotine Cutting guards.
- Always follow lock out procedures prior to removing guard if you need to access the Guillotine Cutter cutting area.

D) Conveyor Belt and Pulleys

WARNING **Risk of entrapment, dismemberment, or pinch from conveyor belt. If disregarded, COULD result in death or serious injury.**

- Fingers and hands can become entrapped, crushed, cut or severed in the moving conveyor belt and pulley

- Always keep hands and fingers out of the area where the conveyor belt meets the pulley at the end of the conveyor table
- Keep all loose clothing, jewelry and long hair tied back and secure when working around the conveyor belt.
- Always follow lock out procedures prior to removing the conveyor belt.

E) Rotating Brush

WARNING **Risk of entrapment, dismemberment, or pinch from rotating brush. If disregarded, COULD result in death or serious injury.**

- Fingers and hands can become entrapped, crushed, cut or severed in the moving rotating brush.

- Always keep hands and fingers out of the rotating brush area.
- Keep all loose clothing, jewelry and long hair tied back and secure when working around the rotating brush.
- Always follow lock out procedures prior to removing the rotating brush.

F) Closing Safety Guards

CAUTION **Risk of crush injury from Safety Guards, if disregarded, COULD result in MINOR or MODERATE injury.**

- Hands and/or fingers maybe crushed if Safety Guards are dropped onto fingers while being closed.

- Always use two (2) hands and attached handles to open and close the Safety Guards. Do not hold at any other location.
- Use handles to support hopper when closing.
- Keep all fingers and hands out of the path of the Safety Guards when returning the Safety Guards to the closed position.

4. Lock-Out Procedures

When working on the SlabLine beyond normal production operation, such as but not limited to: sanitation, repair, regular maintenance, removal of blocked materials, jams or other forms of maintenance ALWAYS lock out the SlabLine by:

1. Pressing the Emergency Stop button.
2. Turn the disconnect (ON/OFF) switch on the panel face to OFF.



3. Place a lock out padlock with tag, thru the switch handle and mark with your identification.



4. Disconnect power cord from power source.

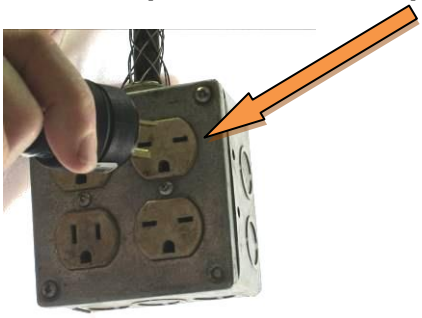

5. Disconnect air line from supply source

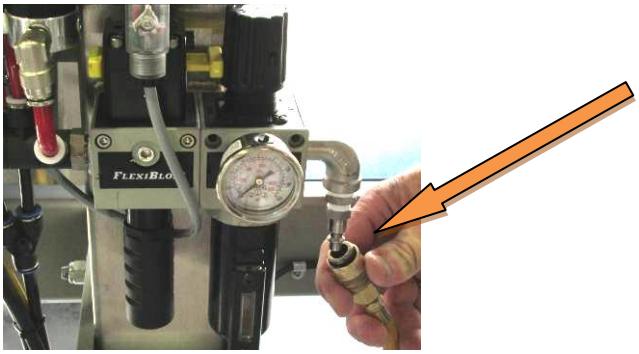

5. Children

Tragic accidents can occur if the operator is not alert to the presence of children.
1. Keep children out of the operating area and under the watchful care of a responsible adult other than the operator.
2. be alert and turn SlabLine off if a child enters the area.
3. Never allow children to operate the SlabLine.

6. General Service



1. Keep all nuts and bolts tight to be sure the equipment is in safe working condition.
2. Never tamper with safety devices. Check their proper operation regularly.
3. Keep SlabLine free of material build-up and other debris build-up.
4. If you strike a foreign object, press E-Stop to turn SlabLine off, wait for the blade to stop, and then inspect the SlabLine. Repair any damage, before starting and operating the SlabLine.
5. Never make any adjustments or repairs with the motor running
6. SlabLine cutting blades are sharp. Wrap the blade or wear gloves, and use extra caution when servicing them.
10. Maintain or replace safety and instruction labels, as necessary.

SAVE THESE INSTRUCTIONS

7. General safety warnings and instructions for the SlabLine



• **STORE SLABLINE INDOORS.** The SlabLine should be stored indoors in dry, secured area – out of reach of children.

• **DON'T FORCE THE SLABLINE.** It will do the job better and with less likelihood of a risk of injury at the rate for which it was designed.

• **USE RIGHT DEVICE.** Do not use the SlabLine for any job except that for which it is intended.

• **DRESS PROPERLY**. Do not wear loose clothing or jewelry. They can be caught in moving parts. Rubber gloves, long pants and substantial, non- skid footwear are recommended when operating.

• **USE SAFETY GLASSES AND OTHER SAFETY EQUIPMENT**. Use safety goggles or safety glasses with side shields, and or a face shield, complying with applicable safety standards. Also use face or dust mask if operation is dusty. This applies to all persons in the work area.

• **DON'T ABUSE CORD**. Never pull or move the SlabLine by the cord or yank it to disconnect from receptacle. Keep cord away from heat, oil, and sharp edges

• **MAINTAIN SLABLINE WITH CARE**. Keep cutting edge clean and sharp for best performance and to reduce the risk of injury. Follow instructions for lubricating and changing accessories. Inspect SlabLine cord periodically and if damaged, have it repaired by authorized service facility. Keep machine in optimal operating condition.

• **AVOID UNINTENTIONAL STARTING**. Always push in the safety E-Stop and turn the disconnect switch to OFF when not in use.

• **BEFORE USING**, always visually inspect to see that the guillotine blade, round cutter blades, cutter assembly, blade fasteners, gauge rollers, rotating brush, and gauge roller scrapers are not worn or damaged. Replace worn or damaged blades and fasteners. Inspect the SlabLine cord - ensure it is in good condition. Cord insulation must be intact with no cracks or deterioration.

8. Check for Damaged Parts.



Before further use of the SlabLine, a guard or other part that is damaged should be carefully checked to determine that it will operate properly and perform its intended function. Check for alignment of moving parts, binding of moving parts, breakage of parts, mounting, and any other conditions that may affect their operation. A guard or other part that is damaged should be properly repaired or replaced by an authorized service center unless otherwise indicated elsewhere in this manual.

• **REPAIRS AND SERVICE**. Repairs, maintenance and any adjustments not specified in this manual should be performed by Unifiller Systems or FME Food Machinery authorized agents or other qualified service organizations, always using genuine Unifiller/FME replacement parts.

9. Areas that require care and attention during operation

A) Gauge rollers

NOTICE

When the machine is operating be sure to pay attention to the Gauge Roller material build up. If the Gauge Rollers accumulate too much material on its surface, the slab may incur some surface finish discrepancies.

Make sure the Gauge Roller scrapers are installed correctly and are properly orientated. Also, be sure the Gauge Roller scrapers are making contact with the Gauge Roller.

When removing excess material off of the Gauge Rollers, be sure to use a plastic scraper and only scrape in the direction parallel to the direction of the conveyor belt. Do not scrape along the direction of the Gauge Roller shaft as this will damage the Gauge Roller surface which will create a rougher surface and allow material to accumulate on the Gauge Roller surface more frequently.

When the machine is operating, be sure to adjust the Gauge Rollers to the same height on both sides of the SlabLine to create a material with a uniform thickness across the width.

Never place body parts or tools in the Gauge Roller area when the machine is in operation.
If the operator needs to retrieve a tool, utensil, or relieve a buildup of material in the Gauge Roller area, follow lock out procedures, then remove tools/utensils and/or excess material build up.

B) Round Cutter Blades



When the machine is operating, be sure to pay attention to the Round Cutter blades material build up. If the Round Cutter blades accumulate too much material on their surface, the slab may incur some rough edges and surface finish discrepancies.

Be sure to monitor the height of the cutting blades as to not let them contact the conveyor belt. If disregarded, the conveyor belt will incur damage and become obsolete.
If the Round Cutter blades are not close enough to the conveyor belt, the Round Cutter blades will not penetrate the slab deep enough to fully cut the slap into desired portions.

When removing the Round Cutter blades for wash down or to change the cutting/scoring pattern, be sure to wear gloves as the Round Cutter blades are extremely sharp.

When adjusting the height of the Round Cutter blades, be sure the height of the Round Cutter blades are consistent on both sides of the Guillotine machine.

C) Guillotine Knife



When the machine is in operation, be sure to pay close attention to the Guillotine Knife assembly. Material may end up getting entrapped and held up inside of the outlet chute. This will cause a buildup of material which will prevent material to be cut properly.

When removing material buildup, be sure to follow lock out procedures before reaching into the Guillotine Knife area.

The slab cutting mechanism is protected by guards on both sides and has safety sensors attached so the machine cannot operate if one of the guards is not in place. If the operator needs to access the cutting mechanism, the machine must be locked out prior to removing the front guard. The intake and outlet guards are designed to allow standard size product through but will prevent hands from accessing the cutting mechanism. Do not pry or alter these guards to accommodate larger materials. Larger materials require alternate guarding. **Do not reach into the cutting area or attempt to circumvent the safety sensors.**

D) Tab Scrapers



When the machine is operating, be sure to pay attention to the position of all Tab Scrapers. The Tab Scrapers should never be in a position where contact to the conveyor belt is present. Damage to the belt conveyor and/or Tab Scrapers will occur.

All Tab Scrapers are adjusted independently. Be sure to position each Tab Scraper so that the Tab Scrapers do not contact the Round Cutter Blades. Failure to do so will cause damage to the Round Cutter blades.

When tightening the split collars on the Tab Scraper bar, be sure to tighten them enough so that you are not easily able to move them on the Tab Scraper bar. Failure to do so will result in the Tab Scrapers being pushed down into the conveyor belt or up into/against the Round Cutter blades which will cause damage to the machine.

E) Rotating Brush



When the machine is operating, be sure to pay close attention to the rotating brush components. The Rotating Brush is used to limit the feed rate to the first gauge roller. The brush should not be overloaded.

The operator should pay attention to the amount of material fed into the machine as to not overload the Rotating Brush. Be sure not to alter or bypass the safety sensors or the protective brush guard.

Never place body parts or tools in the Rotating Brush area when the machine is in operation.
If the operator needs to retrieve a tool, utensil, or relieve a build-up of material in the Rotating Brush area, follow lock out procedures, then remove tools/utensils and/or excess material build up.

F) Compression Roller Scrapers



When the machine is operating, be sure to pay close attention to the Compression Roller Scrapers and their components. The Compression Roller Scrapers are used to help remove the slab off of the Compression Rollers.

If the Scrapers are misaligned or have been damaged from maintenance/cleaning, DO NOT INSTALL THE SCRAPERS ONCE THEY HAVE BEEN DAMAGED. Failure to abide by this notice will cause significant damage to the Compression Roller surface.

Never place body parts or tools in the Compression Roller Scraper area or adjust the Compression Roller Scrapers when the machine is in operation.
If the operator needs to retrieve a tool, utensil, or relieve a build-up of material in the Compression Roller Scraper area, follow lock out procedures, then remove tools/utensils and/or excess material build up.

Power Requirements

Electrical

Minimum Electrical Connection Requirements:

System Voltage: 208 - 230 VAC 60 Hz 3 Phase.
Current: 20 Amps

Compressed Air

NOTICE

Important:

It is recommended that the compressed air supplied to the SlabLine be run through an air dryer before connecting to machine. Failure to comply will result in damage to the machine and the warranty will become void.
Please contact UNIFILLER for details.

Connect the main air supply hose (minimum 3/8” inside diameter) from your compressor and air dryer (not supplied) to the male quick connector that is located on the Guillotine just below the machines Air regulator / Water filter.

Air Pressure Adjustment

To adjust the machine air pressure:
Pull UP the black air regulator adjustment cap/knob on the top of the regulator assembly
- Turn CLOCKWISE to increase air pressure.
- Turn COUNTER-CLOCKWISE to decrease the air pressure.

Recommended Settings

Adjust the air pressure as follows:
Machine at Rest – Adjust to 80 P.S.I. (5.5 Bar)
Machine Cycling – Adjust to 70 P.S.I. (5 Bar) minimum
After the air pressure is set, depress the top cap to lock the setting.

This system requires one pneumatic connection with a Minimum Compressed Air Requirement of:

4 CFM @ 80 PSI (5.5 Bars)

CONTROLS LAYOUT

This machine is equipped with an electronic HMI controller with operator touch screen mounted inside a NEMA 4X enclosure. Most operator adjustments can be made from the HMI touch screen.

Control Box Layout

See Operating Instructions for details



Unitronics Operator Touch Screen

Start/Stop Buttons with Run Light

Machine is powered/energized Indicator light

Console E-Stop Button

Screen Hierarchy

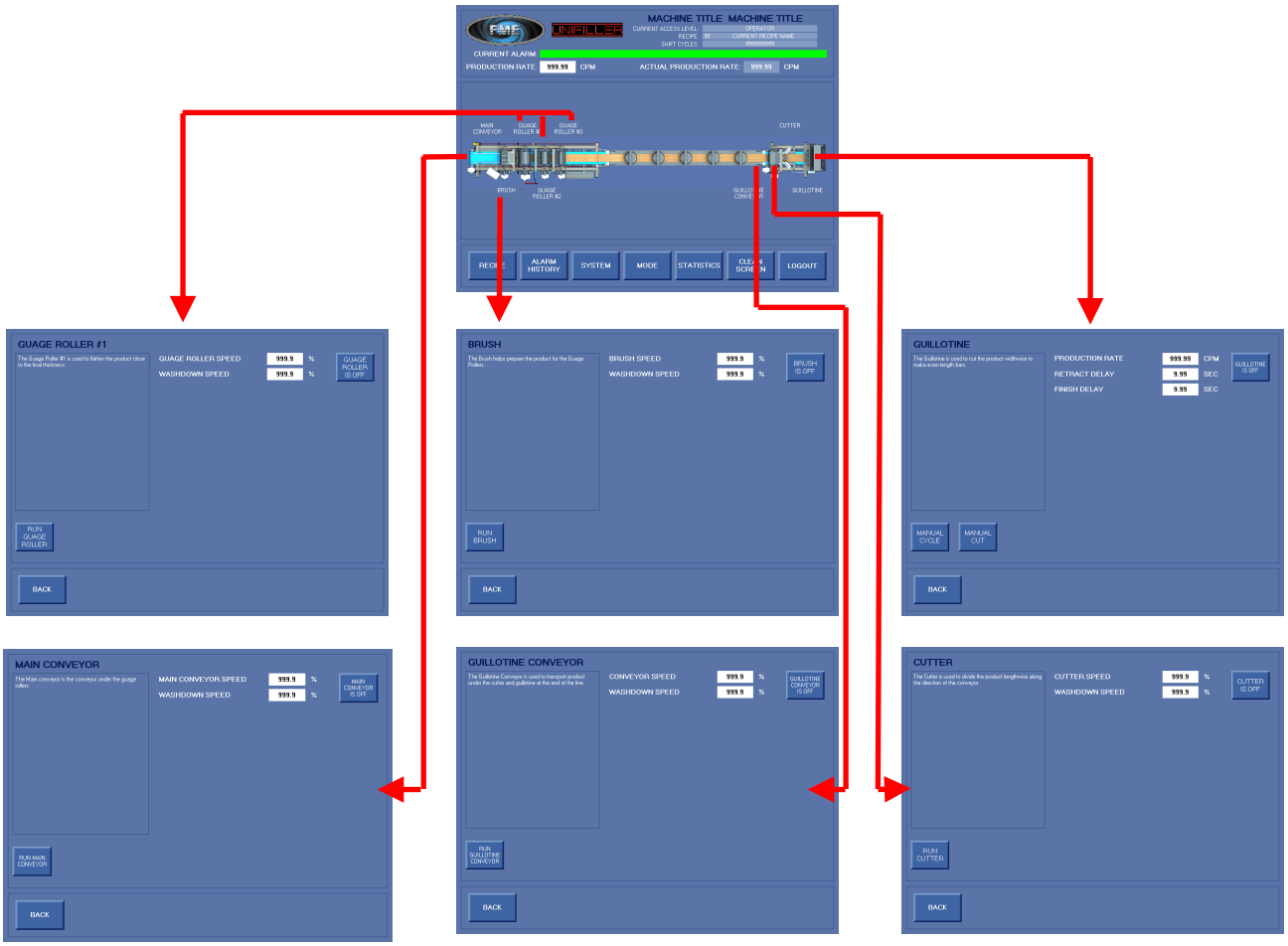

Screen Hierarchy (Continued)

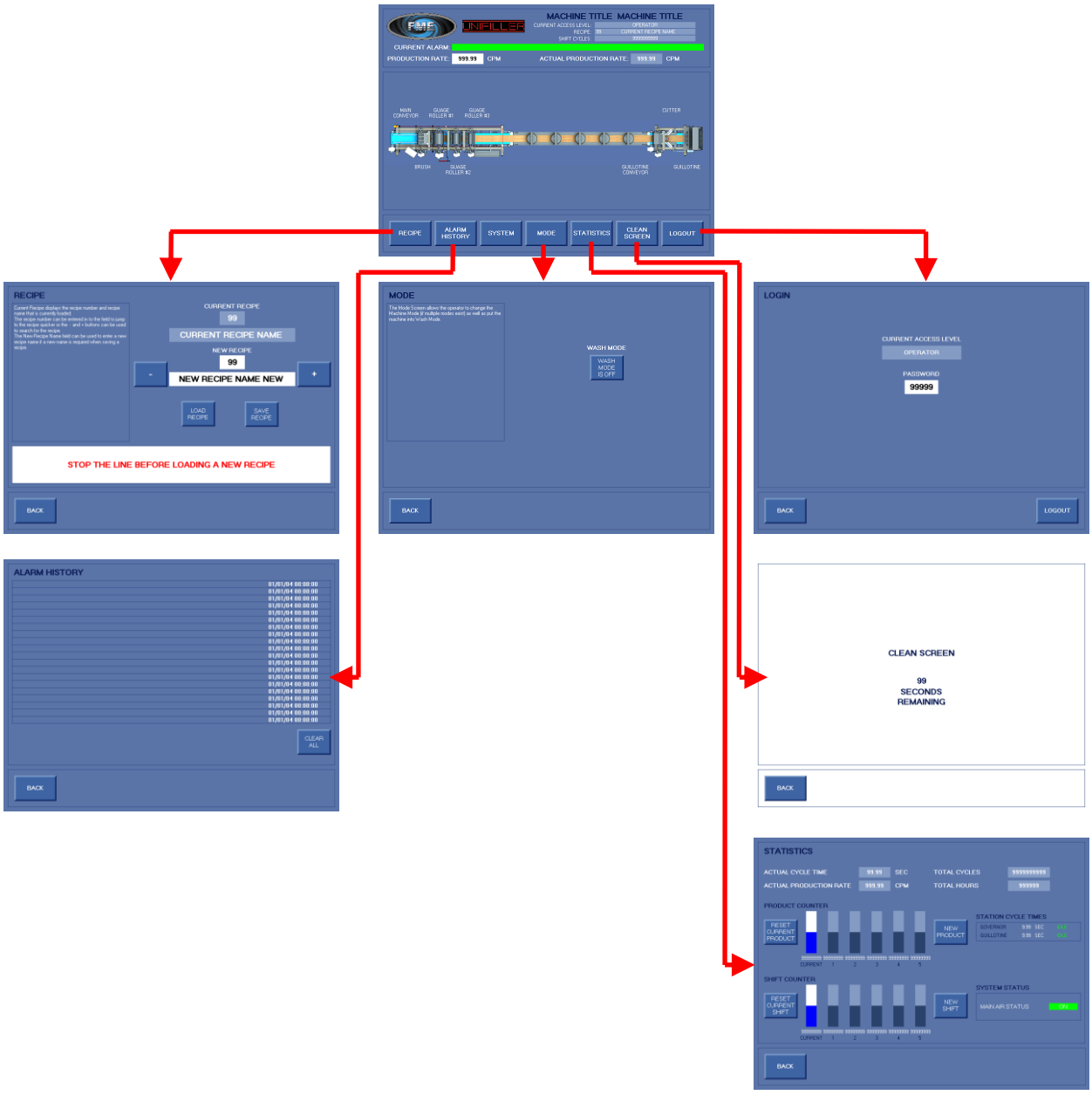

Screen Hierarchy (Continued)

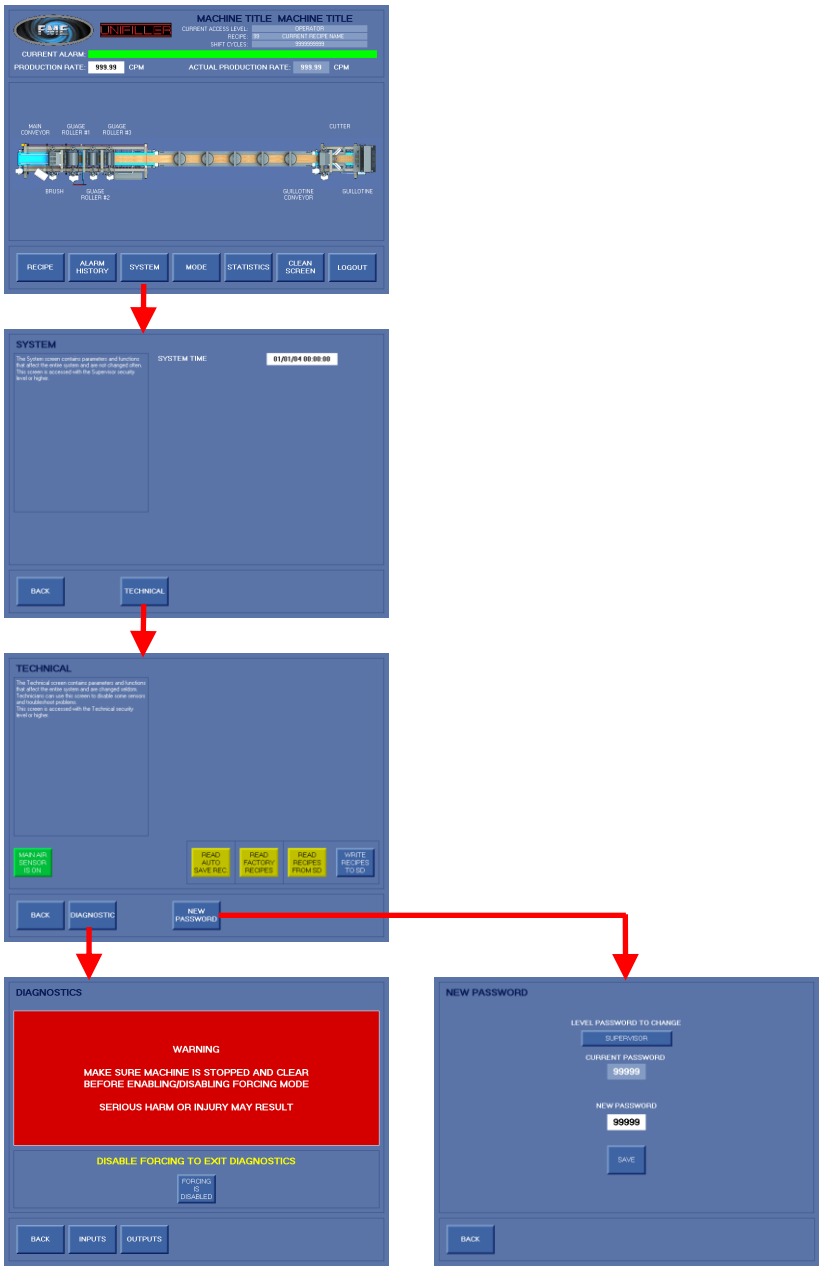

Screen Hierarchy (Continued)

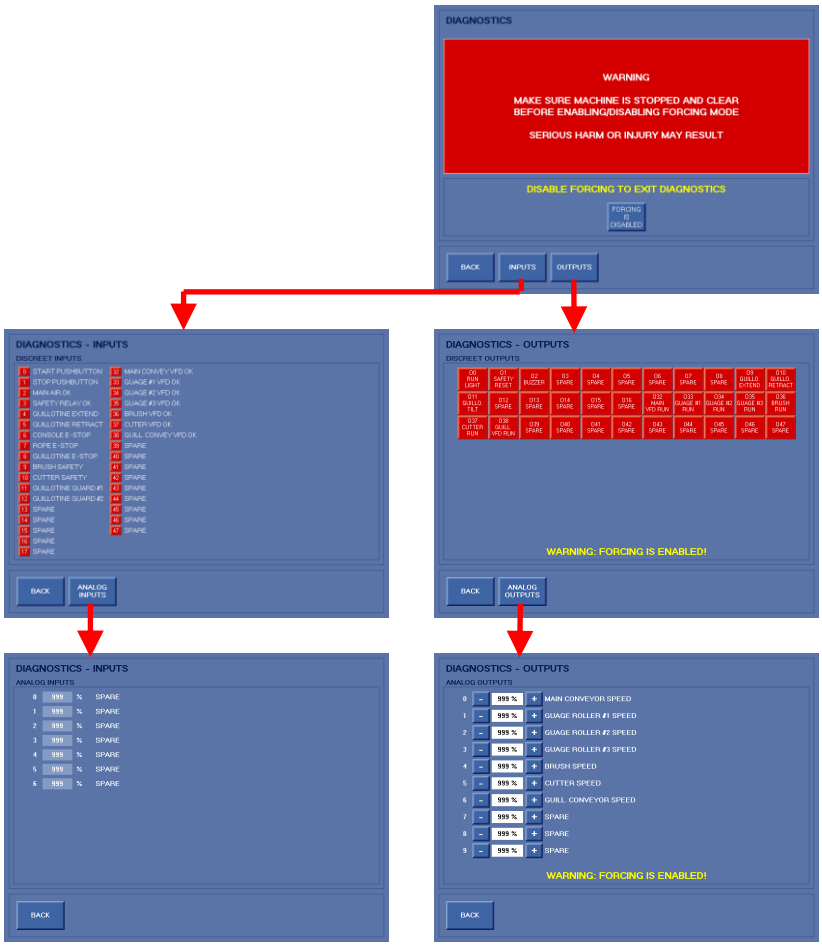

CONTROL SYSTEM DESCRIPTION

Help Pane

The Help Panes are on screens with parameters and change descriptions when a parameter name is touched. These panes allow the operator to get a brief explanation of the parameter they wish to view/edit. This is usually used as a reminder of what the parameter does without having to refer to this user manual.

This user manual must be read first before operating the machine as the Help Screens serve to only supplement the manual.

Note: Most parameters names (in white text) will link to the Help Pane.

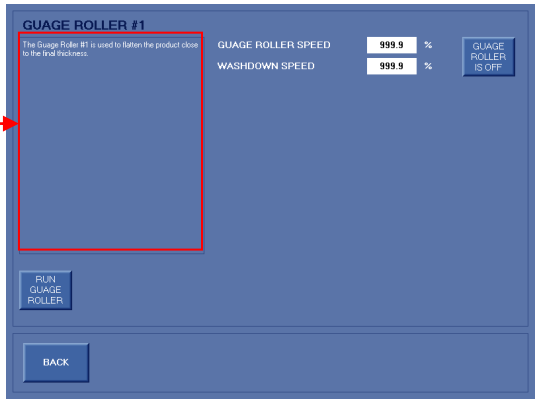

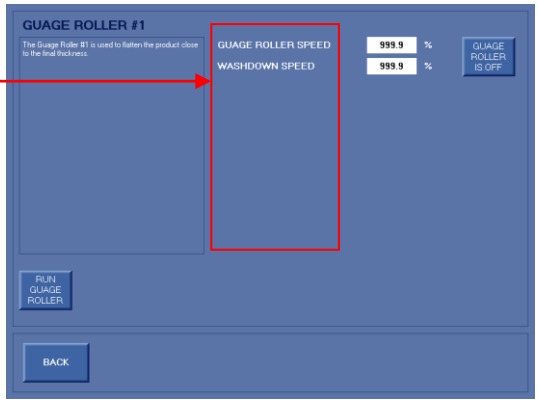

Main Startup Screen

The **Main Startup screen** is the primary operator screen and is shown when the machine is first powered up.

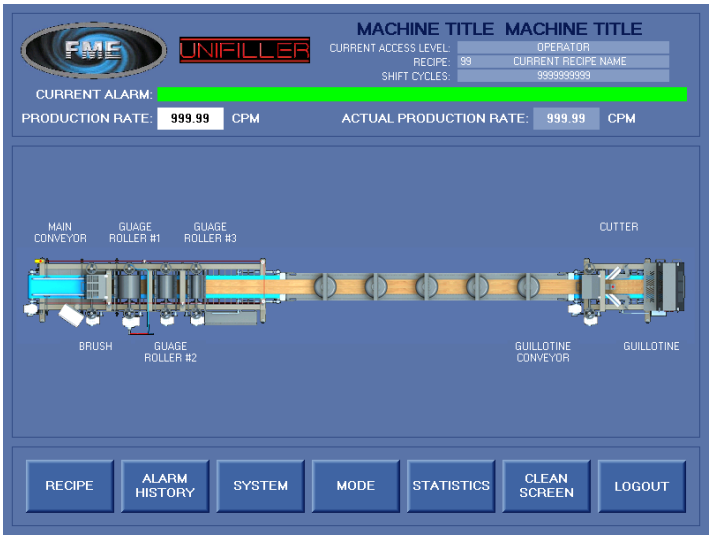

The Main Startup screen contains the following functions and displays:

Item	Function
UNIFILLER LOGO	Accesses the Unifiller screen which shows Unifiller contact information as well as the software revision.
CURRENT ALARM	Displays the current most critical alarm which is occurring on the line. The picture of the line is also used to show where the alarm is occurring. On any other screen the alarm will pop up in a full window and can be cleared by touch.
PRODUCTION RATE	Sets the desired Production Rate of the line in Cycles Per Minute (CPM). This is used as a governor and the Actual Production Rate may be different than the set Production Rate because the line may have to wait for the station to be done, etc.
ACTUAL PRODUCTION RATE	Displays how many cycles the machine is doing per minute at the current rate. This may be different than the set production rate because the line may have to wait for the guillotine feedback to be done, etc. If the Actual Production Rate is less than the set Production Rate, the text box will turn yellow indicating the machine is producing less than desired.
CURRENT ACCESS LEVEL	Displays the security access level which is currently logged in.
RECIPE	Displays the recipe number and recipe name that is currently loaded.
SHIFT CYCLES	Displays the current count of cycles that have been done since the last reset. This count can be reset using the Reset Current Shift button on the Statistics screen.
STATION Button	Each station in the picture of the line is a link to the station parameter screen which allows the operator to: change parameters which affect the function of the station, record adjustments, and cycle the station manually. These screens are described further on in this document.

Continued on the next page…

Main Startup Screen Continued…

The **Main Startup screen** is the primary operator screen and is shown when the machine is first powered up.

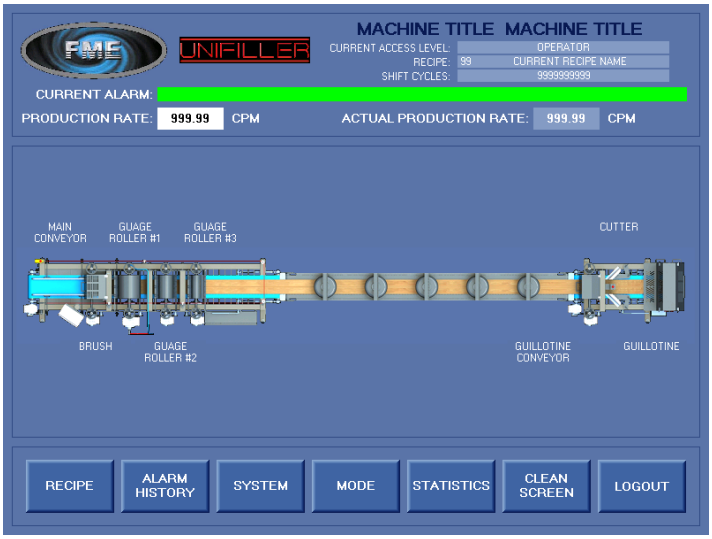

The Main Startup screen also contains the following functions and displays:

Item	Function
RECIPE	Accesses the Recipe screen which allows the operator to load a recipe when the machine is not running. It also allows a Supervisor or higher security level to save a recipe. This screen is described further on in this document.
ALARM HISTORY	Accesses the Alarm History screen which allows the operator to view the last 20 alarms that have occurred and when they happened.
SYSTEM	Accesses the System screen which allows the operator to: change parameters that affect the entire line, and access to the technical screen. This screen is described further on in this document.
MODE	Accesses the Mode screen which allows the operator to: change the machine mode (if applicable), turn on/off Wash Mode for cleaning, or turn on/off Test Mode for testing/troubleshooting. This screen is described further on in this document.
STATISTICS	Accesses the Statistics screen which allows the operator to view: the Actual Production Rate, Actual Cycle Time, Runtime hours, Total Cycles, and Shift Cycles. The Statistics screen also allows the operator to reset the Shift Cycles counter.
CLEAN SCREEN	Accesses the Clean screen, which is left blank, and allows the operator to wipe the screen without accidentally changing machine settings. This screen is described further on in this document.
LOGIN / LOGOUT BUTTON	Accesses the Login screen which allows the operator to enter a password for a higher security level. These levels include: Operator, Supervisor, and Technical. A higher security level has access to more features as well as all of the features lower levels have access to. These security levels are mentioned if they are required for certain screens. If a user is currently logged in, the button will show LOGOUT and can be pressed to logout a higher security level back to the Operator level. This screen is described further on in this document.

Gauge Roller station screen

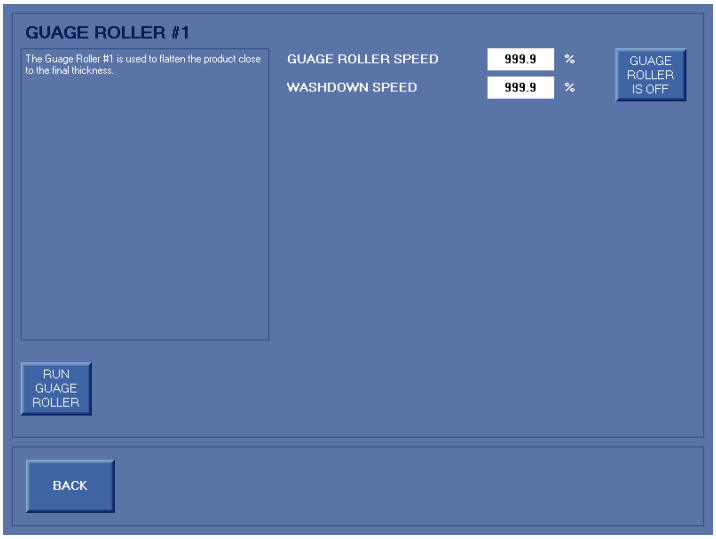

WARNING: MAKE SURE PEOPLE AND LOOSE PARTS ARE CLEAR OF MOVING PARTS AND GAUGE ROLLERS BEFORE MANUALLY RUNNING THE GAUGE ROLLER STATION.

OTHERWISE, SEVERE INJURY OR MACHINE DAMAGE WILL RESULT.

The **Gauge Roller** screens are accessed from the Main Startup screen by pressing the Gauge Roller station picture.

Each station has its own set of speed parameters. These screens allow the operator to change the station's parameters as well as turn the station on or off.

All Gauge Roller station screens are identical in operation.

The **Gauge Roller** station screen contains the following functions and displays:

Item	Function
STATION ON/OFF	The **GAUGE ROLLER IS OFF/ON** button enables or disables the selected Gauge Roller station from cycling.
RUN GAUGE ROLLER	**WARNING: MAKE SURE PEOPLE AND LOOSE PARTS ARE CLEAR OF MOVING PARTS AND GAUGE ROLLERS BEFORE MANUALLY CYCLING AND MANUALLY RUNNING THE GAUGE ROLLER STATION.** **OTHERWISE, SEVERE INJURY OR MACHINE DAMAGE WILL RESULT.** The **RUN GAUGE ROLLER** button allows the operator to manually run the selected Gauge Roller.
WASHDOWN SPEED	The **WASHDOWN SPEED** button adjusts the Gauge roller speed when wash down mode is selected.
GAUGE ROLLER SPEED	The **GAUGE ROLLER SPEED** button adjusts the speed of the Gauge roller when the machine is in operation.
BACK	The **BACK** button returns to the **Main Startup screen**.

Brush Station screen

WARNING

WARNING: MAKE SURE PEOPLE AND LOOSE PARTS ARE CLEAR OF MOVING PARTS AND BRUSH STATION BEFORE MANUALLY CYCLING AND MANUALLY RUNNING THE BRUSH STATION.

OTHERWISE, SEVERE INJURY OR MACHINE DAMAGE WILL RESULT.



The **Brush station screen** is accessed from the Main Startup screen by pressing the Brush station picture.

The Brush station screen enables the operator to control all parameters that control the brush station.

These screens allow the operator to change the station's parameters as well as turn the station ON or OFF.

The Brush station screen contains the following functions and displays:

Item	Function
RUN BRUSH	**WARNING: MAKE SURE PEOPLE AND LOOSE PARTS ARE CLEAR OF MOVING PARTS AND BRUSH STATION BEFORE MANUALLY CYCLING AND MANUALLY RUNNING THE BRUSH STATION.** **OTHERWISE, SEVERE INJURY OR MACHINE DAMAGE WILL RESULT.** The **RUN BRUSH** button allows the operator to manually run the brush. Independently from all other stations.
BRUSH IS OFF/ON	The **BRUSH IS OFF/ON** button allows the operator to turn the brush off or on when the machine is in operation. It also notifies the operator in which state the brush is in at that moment, off or on.
BRUSH SPEED	The **BRUSH SPEED** parameter selection allows the operator to change the speed of the Brush and choose which speed it will run at when the machine is in operation.
BRUSH WASHDOWN SPEED	The **BRUSH WASHDOWN SPEED** parameter selection allows the operator to adjust the speed of the brush when the machine is in wash down mode.
BACK	The **BACK** button allows the operator to return to the MAIN STARTUP SCREEN

Main Conveyor Station screen

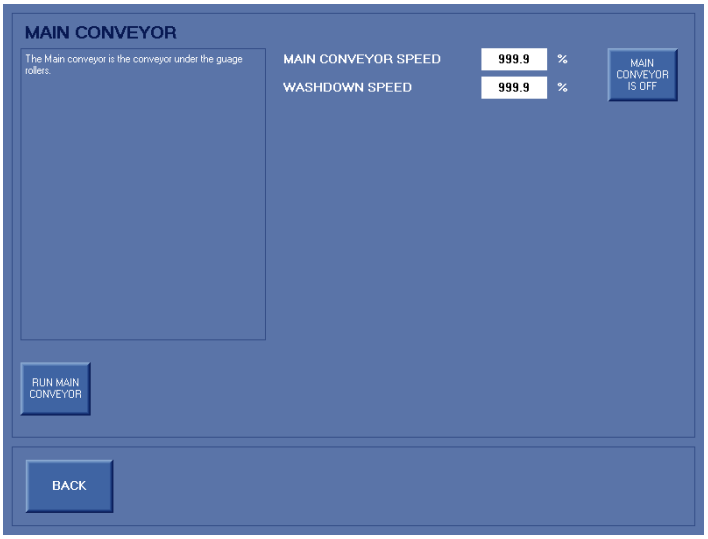

WARNING: MAKE SURE PEOPLE AND LOOSE PARTS ARE CLEAR OF MOVING PARTS AND MAIN CONVEYOR STATION BEFORE MANUALLY RUNNING THE MAIN CONVEYOR STATION.

OTHERWISE, SEVERE INJURY OR MACHINE DAMAGE WILL RESULT.

The Main Conveyor station screen is accessed from the Main Startup screen by pressing the Main Conveyor station picture.

This screen allows the operator to change the Main Conveyor station parameters as well as turn the station on or off.

The Main Conveyor station screen contains the following functions and displays:

Item	Function
RUN MAIN CONVEYOR	**WARNING: MAKE SURE PEOPLE AND LOOSE PARTS ARE CLEAR OF MOVING PARTS AND MAIN CONVEYOR STATION BEFORE MANUALLY CYCLING AND MANUALLY RUNNING THE MAIN CONVEYOR STATION.** **OTHERWISE, SEVERE INJURY OR MACHINE DAMAGE WILL RESULT.** The **MAIN CONVEYOR** button allows the operator to manually run the Main Conveyor independently from all other stations.
MAIN CONVEYOR IS OFF/ON	The **MAIN CONVEYOR IS OFF/ON** button allows the operator to turn the Main Conveyor off or on when the machine is in operation. It also notifies the operator in which state the Main Conveyor is in at that moment, off or on.
MAIN CONVEYOR SPEED	The **MAIN CONVEYOR SPEED** parameter selection allows the operator to change the speed of the Brush and choose which speed it will run at when the machine is in operation.
MAIN CONVEYOR WASHDOWN SPEED	The **MAIN CONVEYOR WASHDOWN SPEED** parameter selection allows the operator to adjust the speed of the Main conveyor when the machine is in wash down mode.
BACK	The **BACK** button allows the operator to return to the **MAIN STARTUP SCREEN.**

Guillotine Conveyor Station Screen

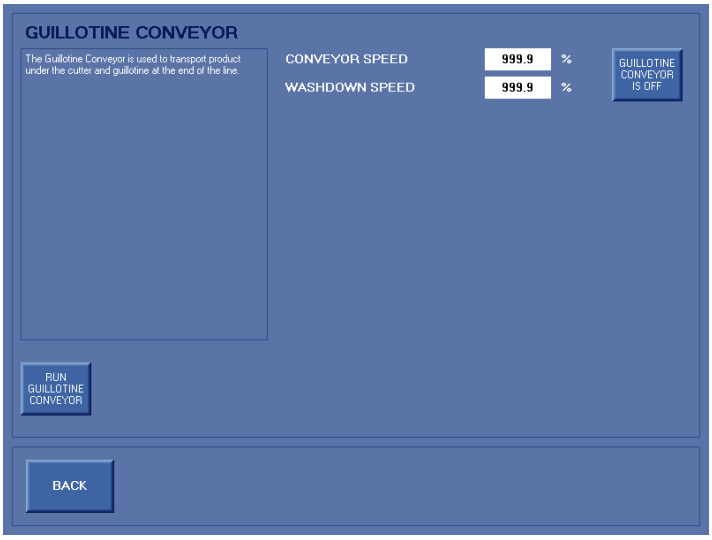

WARNING: MAKE SURE PEOPLE AND LOOSE PARTS ARE CLEAR OF MOVING PARTS AND MAIN CONVEYOR STATION BEFORE MANUALLY RUNNING THE MAIN CONVEYOR STATION.

OTHERWISE, SEVERE INJURY OR MACHINE DAMAGE WILL RESULT.

The **Guillotine Conveyor Station** screen is accessed from the Main Startup screen by pressing the Guillotine Conveyor station button.

This screen allows the operator to change the Guillotine Conveyor station parameters as well as turn the station on or off.

The Guillotine Conveyor Station screen contains the following functions and displays:

Item	Function
RUN GUILLOTINE CONVEYOR	**WARNING: MAKE SURE PEOPLE AND LOOSE PARTS ARE CLEAR OF MOVING PARTS AND MAIN CONVEYOR STATION BEFORE MANUALLY RUNNING THE MAIN CONVEYOR STATION.** **OTHERWISE, SEVERE INJURY OR MACHINE DAMAGE WILL RESULT** The **GUILLOTINE CONVEYOR** button allows the operator to manually run the guillotine Conveyor independently from all other stations.
MAIN CONVEYOR IS OFF/ON	The **GUILLOTINE CONVEYOR IS OFF/ON** button allows the operator to turn the Guillotine Conveyor off or on when the machine is in operation. It also notifies the operator in which state the Guillotine Conveyor is in at that moment, off or on.
GUILLOTINE CONVEYOR SPEED	The **GUILLOTINE CONVEYOR SPEED** parameter selection allows the operator to change the speed of the Guillotine Conveyor and choose which speed it will run at when the machine is in operation.
GUILLOTINE CONVEYOR WASHDOWN SPEED	The **GUILLOTINE CONVEYOR WASHDOWN SPEED** parameter selection allows the operator to adjust the speed of the Guillotine conveyor when the machine is in wash down mode.
BACK	The **BACK** button allows the operator to return to the **MAIN STARTUP SCREEN**

Guillotine Station Screens

WARNING: MAKE SURE PEOPLE AND LOOSE PARTS ARE CLEAR OF MOVING PARTS AND CUTTING BLADES BEFORE MANUALLY CYCLING AND MANUALLY CUTTING GUILLOTINE STATION. SEVERE INJURY OR MACHINE DAMAGE WILL RESULT.

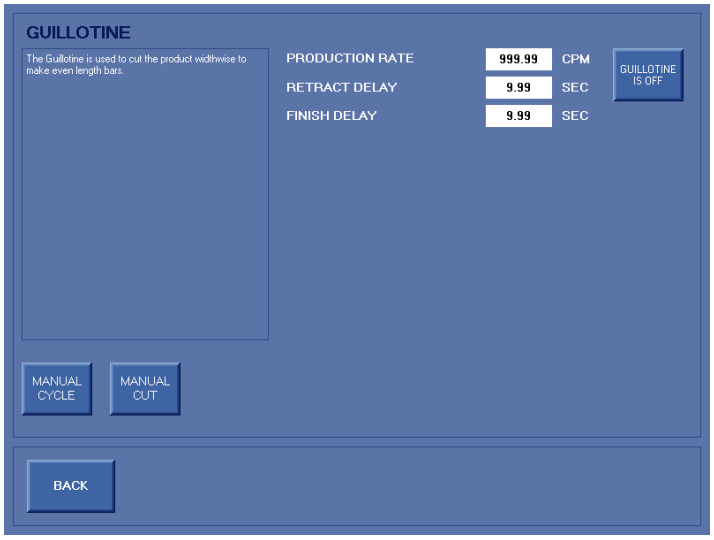

The **Guillotine Conveyor Station** screen is accessed from the Main Startup screen by pressing the Guillotine Conveyor station button. This screen allows the operator to change the Guillotine Conveyor station parameters as well as turn the station on or off.

The Guillotine Conveyor Station screen contains the following functions and displays:

Item	Function
MANUAL CYCLE	**WARNING: MAKE SURE PEOPLE AND LOOSE PARTS ARE CLEAR OF MOVING PARTS AND CUTTING BLADES BEFORE MANUALLY CYCLING GUILLOTINE STATION.** The **MANUAL CYCLE** button allows the operator to manually cycle the Guillotine Station. One cycle would be of the Guillotine knife extending and then retracting (One full Cycle).
MANUAL CUT	**WARNING: MAKE SURE PEOPLE AND LOOSE PARTS ARE CLEAR OF MOVING PARTS AND CUTTING BLADES BEFORE MANUALLY CUTTING GUILLOTINE STATION.** The **MANUAL CUT** button allows the operator to manually control the Guillotine. Once the button is pressed, the Guillotine will extend and hold that position until the button is released. Once released, the Guillotine will retract to its original position.
GUILLOTINE IS OFF/ON	The **GUILLOTINE IS OFF/ON** button allows the operator to turn the Guillotine off or on when the machine is in operation. It also notifies the operator in which state the Guillotine is in at that moment, off or on.
PRODUCTION RATE (CPM)	The **PRODUCTION RATE** Parameter will allow the operator to set the frequency of how often the Guillotine knife will cycle. This parameter is independent from the rest of the machine. This parameter determines the distance between each cut.
RETRACT DELAY (SECONDS)	The **RETRACT DELAY** Button sets how long the knife will wait once it has fully extended to ensure the knife is cutting through all the material before the knife retracts.
FINISH DELAY (SECONDS)	The **FINISH DELAY** Button is used to keep the knife cycle active after the knife is done. It is used to allow anything else to finish before allowing another knife cycle. In this case (SLAB LINE) there is nothing else to finish. Therefore, this parameter should be set to “0”.
BACK	The **BACK** button allows the operator to return to the **MAIN STARTUP SCREEN**

Cutter Station Screen

WARNING: MAKE SURE PEOPLE AND LOOSE PARTS ARE CLEAR OF MOVING PARTS AND CUTTING BLADES BEFORE MANUALLY RUNNING THE CUTTER STATION.

OTHERWISE, SEVERE INJURY OR MACHINE DAMAGE WILL RESULT.

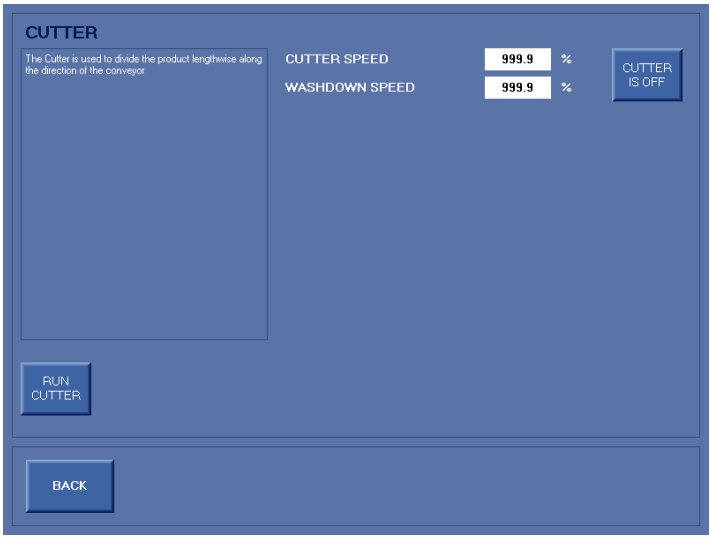

The **Cutter Station screen** is accessed from the Main Startup screen by pressing the Cutter station button.

This screen allows the operator to change the Cutter station parameters as well as turn the station on or off.

The Cutter Station screen contains the following functions and displays:

Item	Function
RUN CUTTER	**WARNING: MAKE SURE PEOPLE AND LOOSE PARTS ARE CLEAR OF MOVING PARTS AND CUTTING BLADES BEFORE MANUALLY RUNNING THE CUTTER STATION.** **OTHERWISE, SEVERE INJURY OR MACHINE DAMAGE WILL RESULT.** The **RUN CUTTER** button allows the operator to manually run the Cutter independently from all other stations.
CUTTER IS OFF/ON	The **CUTTER IS OFF/ON** button allows the operator to turn the Cutter off or on when the machine is in operation. It also notifies the operator in which state the Cutter is in at that moment, off or on.
CUTTER SPEED	The **CUTTER SPEED** parameter selection allows the operator to change the speed of the Cutter and choose which speed it will run at when the machine is in operation.
CUTTER STATION WASHDOWN SPEED	The **WASHDOWN SPEED** parameter selection allows the operator to adjust the speed of the Cutter when the machine is in wash down mode.
BACK	The **BACK** button allows the operator to return to the **MAIN STARTUP SCREEN.**

Recipe Selection Screen



The **Recipe Selection screen** is accessed from the Main screen by pressing the RECIPE button.

This screen allows the operator to load recipes when the machine is not running. The operator can also save recipes if logged in at the Supervisor security level or higher.

Note: The recipe cannot be saved over the Default Recipe # 0. The default recipe is used for troubleshooting the machine and as a base point for creating new recipes.

The Recipe Selection Screen contains the following functions and displays:

Item	Function
CURRENT RECIPE	The **CURRENT RECIPE** refers to the recipe number and name that is currently loaded.
+ Button	This button allows the operator to scroll through the recipes by increasing the recipe number. The number and name of the recipe will appear in the New Recipe dialog boxes.
- Button	This button allows the operator to scroll through the recipes by decreasing the recipe number. The number and name of the recipe will appear in the New Recipe dialog boxes.
NEW RECIPE NUMBER	This shows the number of the recipe that is currently selected by the **–** and **+** buttons. This field can also be pressed in order to enter the number by keypad.
NEW RECIPE NAME	This shows the name of the recipe that is currently selected by the **–** and **+** buttons. This field can also be pressed in order to enter a new name for the recipe. This name will only be kept when the Save Recipe button is pressed.
LOAD RECIPE	The **LOAD RECIPE** button allows the operator to load the recipe that is currently selected in the New Recipe field.
SAVE RECIPE	The **SAVE RECIPE** button allows a supervisor or higher security level to save the recipe that is currently selected in the New Recipe field. This will also save the name of the New Recipe if it has been changed by the operator. A warning will appear and the button will become yellow while saving. If the SD card is present, the recipes will also be automatically saved to the SD card for backup purposes. This process takes a little longer. The backed up recipes can be recalled from the Technical screen.
BACK	The **BACK** button returns the operator to the **Main Startup screen**.

Alarm History Screen

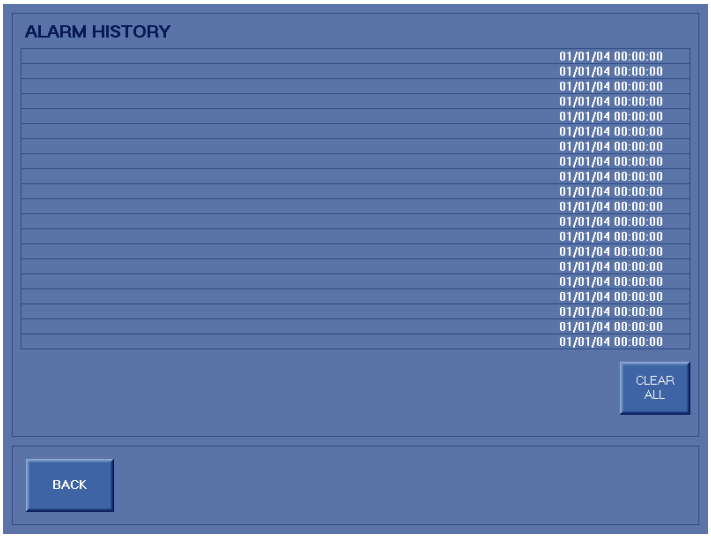

The **Alarm History screen** is accessed from the Main Startup screen by pressing the ALARM HISTORY button.

This screen allows the operator to view the previous 20 alarms and when they occurred.

The Alarm History Screen contains the following functions and displays:

Item	Function
Alarm Banner	Displays the alarms that have occurred in the past. The top banner is the most recent alarm and proceeds in chronological order as you move down the screen.
Alarm Date/Time Stamp	Displays the date and time when the alarm occurred. In the DD/MM/YYYY HH:MM:SS format
CLEAR ALL	The **CLEAR ALL** button is available to the Supervisor or higher security level and will erase all 20 historical alarms.
BACK	The **BACK** button returns to the **MAIN STARTUP SCREEN.**

Mode Screen

WARNING

WARNING: MAKE SURE PEOPLE AND LOOSE PARTS ARE CLEAR OF MOVING PARTS AND ALL OTHER STATIONS BEFORE RUNNING THE MACHINE IN TEST MODE.

OTHERWISE, SEVERE INJURY OR MACHINE DAMAGE WILL RESULT.

The **Mode screen** is accessed from the Main Startup screen by pressing the MODE button.

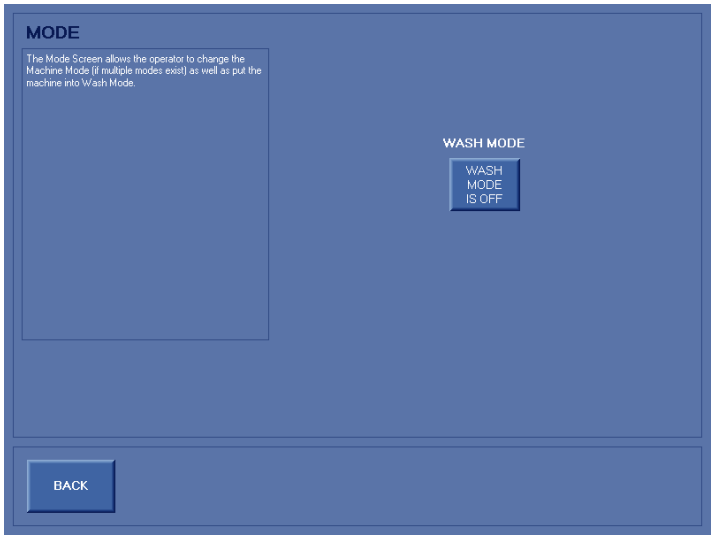

This screen allows the operator to put the machine into Wash Mode or Test Mode and also change conveyor modes (if available).

The Mode Screen contains the following functions and displays:

Item	Function
WASH MODE Button	The **WASH MODE** button turns on the Wash Mode. This mode will run the conveyors continuously for cleaning at the Washdown Speed but will disable the machine from cycling.
TEST MODE Button	**WARNING: MAKE SURE PEOPLE AND LOOSE PARTS ARE CLEAR OF MOVING PARTS AND ALL OTHER STATIONS BEFORE RUNNING THE MACHINE IN TEST MODE.** **OTHERWISE, SEVERE INJURY OR MACHINE DAMAGE WILL RESULT.** The **TEST MODE** button turns on Test Mode. This mode will run all functions continuously to test the endurance and reliability of the machine. It can also be used to diagnose problems on the machine. **This button is hidden until logged in at the Technician security level.**
BACK	The **BACK** button returns the operator to the **Main Startup screen.**

Statistics Screen

The **Statistics screen** is accessed from the Main screen by pressing the STATISTICS button.

This screen allows the operator to view statistical information and reset the Shift Cycles counter and the Product Cycle counter.

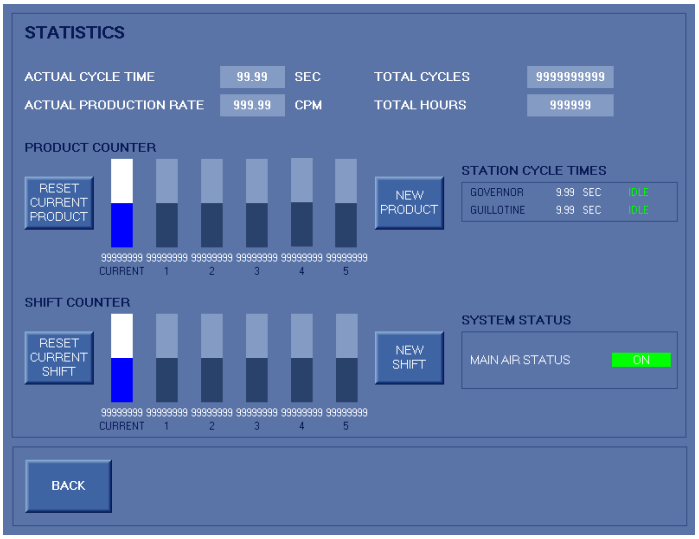

The Statistics screen contains the following functions and displays:

Item	Function
ACTUAL CYCLE TIME	Displays how long a cycle takes in seconds at the current Actual Production Rate.
ACTUAL PRODUCTION RATE	Displays how many cycles the line is doing per minute, at the current rate.
TOTAL CYCLES	This is the total amount of cycles the machine has completed in its lifetime. This counter cannot be reset.
TOTAL HOURS	This is the total amount of hours the machine has been operating in its lifetime. This counter cannot be reset.
STATION CYCLE TIMES	This section displays the governor (Production Rate timer) as well as the cycle times of each individual station. A Status of each station is also displayed: Green indicates Idle operation, Yellow is a warning that the station is Active, and Red indicates the station is delaying the machine from cycling again at the current set production rate. This can be used to determine bottlenecks in the line and allow the operator to identify where they may be able to increase the Production Rate.
MAIN AIR STATUS	Displays whether the Main Air sensor is enabled or not. The button to turn the Main Air sensor off/on is located on the Technical screen. This is usually **ON** unless the pressure sensor has failed.
BACK	The **BACK** button returns the operator to the **Main Startup screen.**

Continued on the next page…

Statistics Screen Continued…

These are the Counters, Bar Graphs and associated buttons contained within the Statistics screen which were not covered on the previous page.



The Statistics screen contains the following functions and displays:

Item	Function
PRODUCT COUNTERS	This shows the counts for the Current Product Cycles run (Current in Light Blue) as well as historical product runs (1-5 in Dark Blue). The graphs are all shown compared to the greatest run in the set of 6.
SHIFT COUNTERS	This shows the counts for the Current Shift Cycles (Current in Light Blue) as well as historical shifts (1-5 in Dark Blue). The graphs are all shown compared to the greatest shift cycle count in the set of 6.
RESET PRODUCT CYCLES Button	This button is used to zero the Current Product Cycles count. This is usually used to reset the Current Product Cycles count after a predetermined amount of time (after a product run, etc.)
NEW PRODUCT Button	This button moves all Product counts over 1 historical position. The last Product count (5) is lost and the Current Product Cycles count is reset for a new count. This is usually used when a new product run is started.
RESET SHIFT CYCLES Button	This button is used to zero the Current Shift Cycles count. This is usually used to reset the Current Shift Cycles count after a predetermined amount of time (after a day shift, etc.)
NEW SHIFT Button	This button moves all Shift counts over 1 historical position. The last Shift (5) is lost and the Current Shift Cycles count is reset for a new count. This is usually used when a new shift (day) is started.

Clean Screen

The **Clean screen** is accessed from the Main Startup screen by pressing the CLEAN SCREEN button. This screen allows the operator wipe the screen without accidentally changing parameters or pressing buttons.

The screen will count down from 10 Seconds for cleaning and then the Back button will appear to exit.



The Clean Screen contains the following functions and displays:

Item	Function
BACK	The **BACK** button returns the operator to the **Main Startup screen.**

Login Screen

The **Login Screen** pops up when the LOGIN button is pressed on the Main Startup Screen or when a higher security level is required to enter a specific screen.

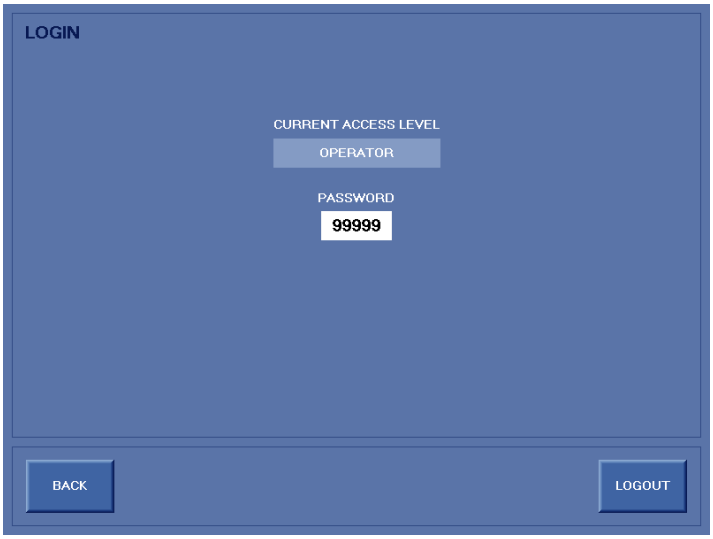

The Login screen contains the following functions and displays:

Item	Function
CURRENT ACCESS LEVEL	This dialog box shows the current access level logged in. These levels include: Operator, Supervisor, and Technical. A higher security level has access to more features as well as all of the features lower levels have access to. These security levels are mentioned if they are required for certain screens.
PASSWORD	The Password dialog box allows the operator to type the password in from the numeric keypad. The logged in security level will change if the password is correct. The default password for the Supervisor level is: 2 The default password for the Technician level is: 2233
LOGOUT Button	If logged in at the Supervisor or Technical level, the Logout Button will appear and give the operator the ability to logout to the lowest level; Operator.
BACK Button	The **BACK** button returns the operator to the **Main Startup Screen.**

System Screen

The **System screen** is accessed from the Main Startup screen by pressing the SYSTEM button.

This screen allows only the Supervisor or Technician security level to change parameters that are not changed often and affects the entire machine.

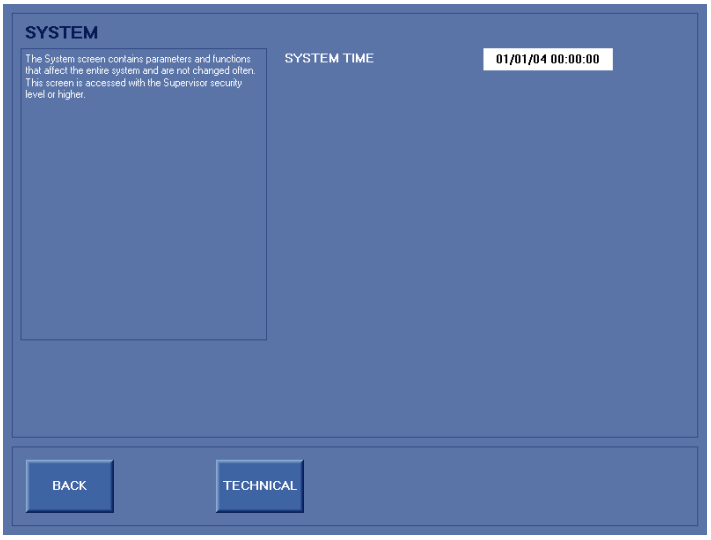

The System screen contains the following functions and displays:

Item	Function
SYSTEM TIME	System Time sets the Date and Time of the clock in the machine. This is used in the Alarm History screen for recording when Alarms take place.
TECHNICAL Button	This button lets a technician or higher security level access the Technical screen which contains rarely used machine settings and access to the New Password and Diagnostics screens. This screen is described on the next page.
BACK Button	The **BACK** button returns the operator to the **Main Startup Screen.**

Technical Screen

The **Technical screen** is accessed from the System Screen by pressing the TECHNICAL button.

This screen allows only the Technician security level to change parameters that are changed rarely and affect the entire machine.

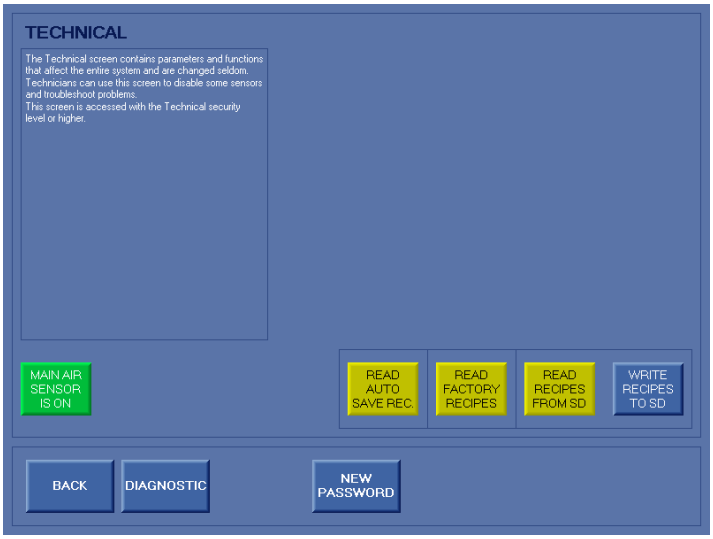

The Technical screen contains the following functions and displays:

Item	Function
MAIN AIR SENSOR OFF/ON Button	The **MAIN AIR SENSOR OFF/ON** button is used to enable and disable the Main Air sensor in the case that the sensor has failed.
DIAGNOSTIC Button	The **DIAGNOSTIC** button accesses the Diagnostics screens which can be used to check inputs and outputs and to force outputs for troubleshooting. These screens are described further on in this document.
NEW PASSWORD Button	The **NEW PASSWORD** button accesses the New Password screen which allows the Technician to change the Supervisor and Technician passwords. This screen is described further on in this document.
READ AUTO SAVE REC.	*Note: Every time a recipe is saved, all of the recipes are Auto Saved onto the SD card if it is installed.* This button allows the Technician to recall the last Auto Saved recipes from the SD and put them onto the PLC. This is usually used if the PLC fails and is replaced with a new PLC. The latest recipes can be recalled from the SD card with this button. This button appears when the SD card is inserted into the back of the PLC. This button will be disabled (grey) if the SD card is locked. Warning: Pressing this button will overwrite ALL recipes currently in the PLC with the recipes from the SD card.
READ FACTORY RECIPES	This button allows the Technician to recall the recipes from the SD card that came with the machine from Unifiller and put them onto the PLC. This is usually used if a fresh start is needed or for troubleshooting. This button appears when the SD card is inserted into the back of the PLC. This button will be disabled (grey) if the SD card is locked. Warning: Pressing this button will overwrite ALL recipes currently in the PLC with the recipes from the SD card.

Continued on the next page…

Technical Screen Continued…

These are the Recipe buttons of the Technical screen which were not covered on the previous page.

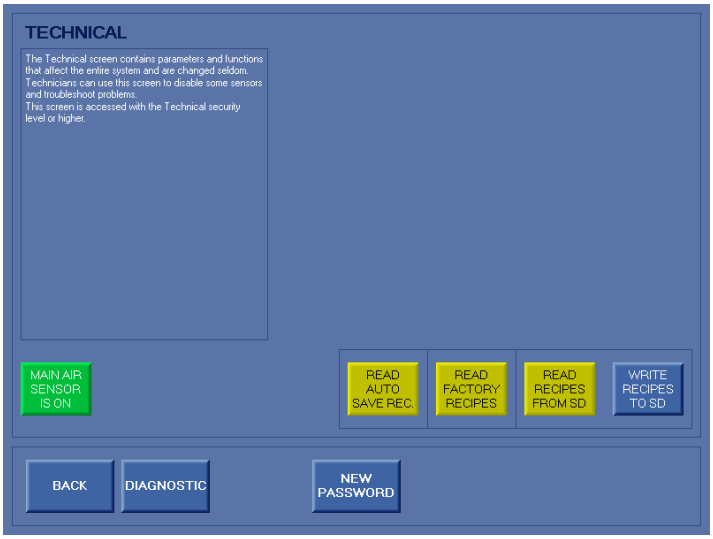

The Technical screen also contains the following functions and displays:

Item	Function
READ RECIPES FROM SD	The **READ RECIPES FROM SD** button allows the Technician to recall the recipes from the SD card that were saved the last time the Write Recipes to SD button was pushed and put them onto the PLC. This is usually used for backup, troubleshooting, or maintenance (PLC change). This button appears when the SD card is inserted into the back of the PLC. This button will be disabled (grey) if the SD card is locked. Warning: Pressing this button will overwrite ALL recipes currently in the PLC with the recipes from the SD card.
WRITE RECIPES TO SD	The **WRITE RECIPES TO SD** button allows the Technician to save the recipes from the PLC onto the SD card whenever it is required. This can be done at regular intervals (backup) or for whenever it is needed for maintenance or troubleshooting. This button appears when the SD card is inserted into the back of the PLC. This button will be disabled (grey) if the SD card is locked.
BACK	The **BACK** button returns the operator to the **System Screen.**

New Password Screen

The **New Password screen** is accessed from the Technical screen by pressing the NEW PASSWORD button.

This screen allows only the Technician security level to change the Supervisor and Technician security level passwords.

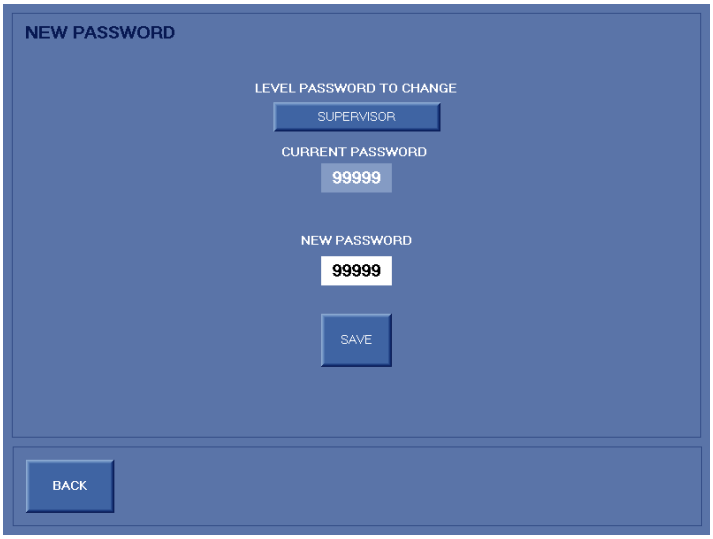

The New Password screen contains the following functions and displays:

Item	Function
LEVEL PASSWORD TO CHANGE	This button allows the operator to select either the Supervisor or Technician security level password to be changed.
CURRENT PASSWORD	Current Password displays the numerical password that currently exists for the selected security level.
NEW PASSWORD	New Password lets the operator enter a new numerical password for the selected security level. Press the New Password field to enter a new password.
SAVE Button	This button allows the operator to set and save the new password. Once the new password has been entered using the numeric keypad, pressing this button will store the new password.
BACK	The **BACK** button returns the operator to the **Technical Screen.**

Diagnostics Screen

⚠WARNING

Warning: The machine must be stopped before entering Forcing Mode.
Injury or damage may occur when forcing outputs.
Make sure people and parts are clear of moving components before activating outputs.

The **Diagnostics screen** is accessed from the Technical screen by pressing the DIAGNOSTIC button.

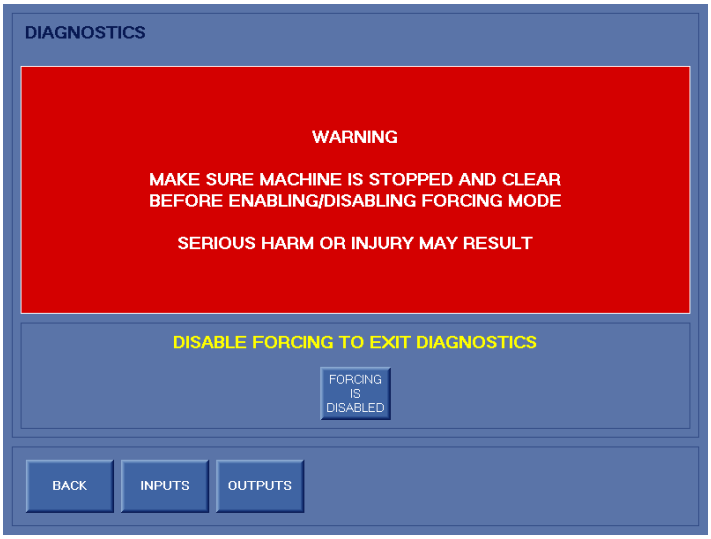

This screen warns the technician to make sure the line is clear and to stop the line before proceeding.

The Diagnostics screen contains the following functions and displays:

Item	Function
FORCING IS DISABLED/ENABLED	**Warning: The machine must be stopped before entering Forcing Mode. Damage may occur when forcing outputs.** **Make sure people and parts are clear of moving components before activating outputs.** The **FORCING IS DISABLED/ENABLED** button turns Forcing OFF or ON. Forcing is used to turn outputs OFF or ON regardless of what the program is doing. This is usually used for troubleshooting. Forcing must be turned OFF before exiting the Diagnostics screen.
INPUTS Button	The **INPUTS** button accesses the Diagnostics Inputs screen. This screen is used to monitor the inputs. This screen is described further on in this document.
OUTPUTS Button	The **OUTPUTS** button accesses the Diagnostics Outputs screen. This screen is used to monitor the outputs when Forcing is Disabled and to control the outputs when Forcing is Enabled. This screen is described on the next page.
BACK	The **BACK** Button returns the operator to the Technical screen. This button will be disabled (grey) when Forcing is Enabled. Forcing must be shut off before exiting the Diagnostics screens.

Diagnostics Outputs (Discreet) Screen

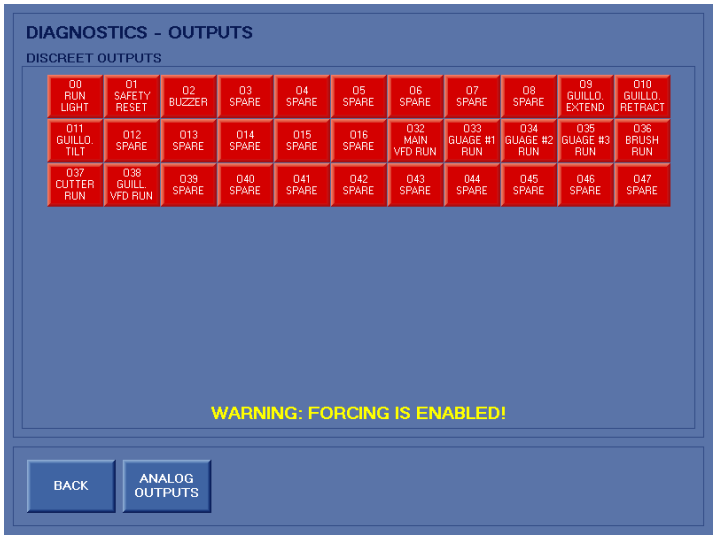

WARNING

Warning: The machine must be stopped before entering Forcing Mode. Injury or damage may occur when forcing outputs. Make sure people and parts are clear of moving components before activating outputs.

The **Diagnostics Outputs (Discreet) screen** is accessed from the Diagnostics screen by pressing the **OUTPUTS** button. This screen allows the technician to monitor and force Discreet Outputs that are connected to the PLC.

The Diagnostics Outputs (Discreet) screen contains the following functions and displays:

Item	Function
DISCREET OUTPUTS	**Warning: Make sure people and parts are clear of moving components before forcing outputs. Severe injury or machine damage may result.** Discreet Outputs are shown as RED buttons when OFF and GREEN buttons when ON. When in Forcing Mode, a warning will appear and these buttons can be pressed to force each output ON or OFF.
ANALOG OUTPUTS Button	The **ANALOG OUTPUTS** button accesses the Diagnostics Analog Outputs screen which allows the Technician to monitor and control the Analog Outputs. This screen is described on the next page.
BACK	The **BACK** button returns the operator to the Diagnostics screen.

Diagnostics Outputs (Analog) Screen



WARNING

Warning: The machine must be stopped before entering Forcing Mode. Injury or damage may occur when forcing outputs. Make sure people and parts are clear of moving components before activating outputs.

The **Diagnostics Outputs (Analog) screen** is accessed from the Diagnostics screen by pressing the ANALOG OUTPUTS button. This screen allows the technician to monitor and force Analog Outputs that are connected to the PLC.

The Diagnostics Outputs (Analog) screen contains the following functions and displays:

ANALOG OUTPUTS	**Warning: Make sure people and parts are clear of moving components before forcing outputs. Severe injury or machine damage may result.** **Analog Outputs** are shown as 0-100% values. The analog outputs will be read-only (grey) when Forcing is Disabled. These analog outputs can be changed when Forcing is Enabled by either the +/- buttons or by entering the value in the value field.
ANALOG OUTPUT - Button	The **–** button will be disabled (grey) when Forcing is Disabled. Decreases the value of the analog output by 1%. This button can be tapped for 1 digit changed or held to change the value rapidly.
ANALOG OUTPUT + Button	The **+** button will be disabled (grey) when Forcing is Disabled. Increases the value of the analog output by 1%. This button can be tapped for 1 digit changed or held to change the value rapidly.
BACK	The **BACK** button returns to the Diagnostics Outputs screen.

Diagnostics Inputs (Discreet) Screen

The **Diagnostics Inputs (Discreet) screen** is accessed from the Diagnostics screen by pressing the INPUTS button.

This screen allows the technician to monitor Discreet Inputs that are connected to the PLC.



The Diagnostics Inputs (Discreet) screen contains the following functions and displays:

Item	Function
DISCREET INPUTS	**DISCREET INPUTS** are shown as RED indicators when OFF. The red indicator will turn GREEN when the input is ON. The name of the device is shown beside each indicator.
ANALOG INPUTS Button	This button accesses the Diagnostics Analog Inputs screen which allows the Technician to monitor the Analog Inputs. This screen is described on the next page.
BACK	The **BACK** Button returns to the Diagnostics screen.

Diagnostics Inputs (Analog) Screen

The **Diagnostics Inputs (Analog) screen** is accessed from the Diagnostics screen by pressing the ANALOG INPUTS button.

This screen allows the technician to monitor Analog Inputs that are connected to the PLC.

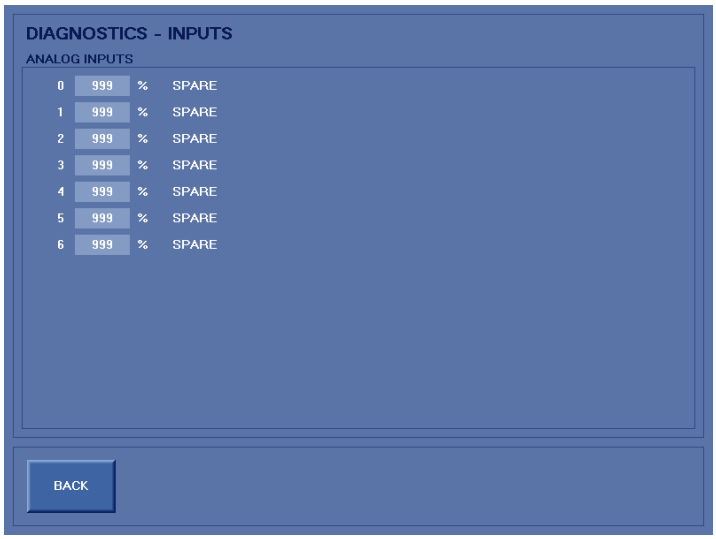

The Diagnostics Inputs (Analog) screen contains the following functions and displays:

Item	Function
ANALOG INPUTS	Analog Inputs are shown as 0-100% values. The analog inputs are read-only.
BACK	The **BACK** Button returns to the Diagnostics Inputs (Discreet) screen.

Warnings, Alarms, and Diagnostics

No Air Pressure

- Check that the air supply is connected and the red switch by the air supply is turned on.
- Check that the pressure is at 80 PSI.
- Make sure the E-Stop dump valve is on by the regulator (orange light should be lit).
- If all conditions above are true, then the main air sensor may need to be adjusted or replaced. In the meantime, shut off the air sensor on the technical screen to continue production



Console/Rope/Pushbutton/E-Stop Condition

- Check that all E-Stop buttons are pulled out and that the blue switches on all E-Stop ropes are reset. The screen will usually indicate which E-Stop is activated.
- Wait for all drives to shut down before resetting the E-Stop condition.
- Press the Red Flashing Reset button on the front panel to reset the E-Stop condition.

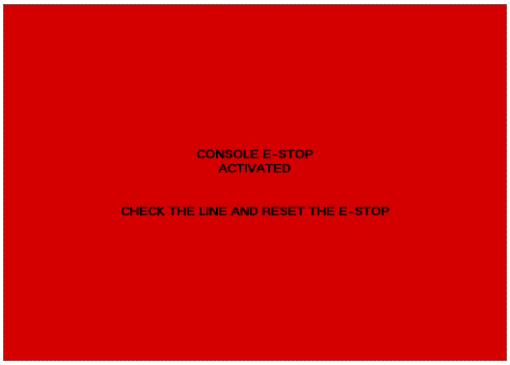

Main Conveyor Drive Fault

- Check the error message on the drive and refer to the drive's User Manual.
- Try resetting the drive by cycling the power. If the problem persists, the drive may need to be replaced.

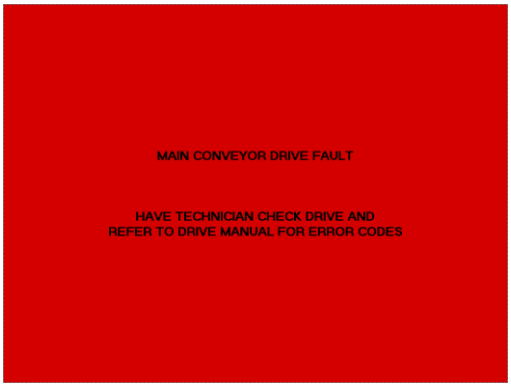

Guillotine Conveyor Drive Fault

- Check the error message on the drive and refer to the drive's User Manual.
- Try resetting the drive by cycling the power.
- If the problem persists, the drive may need to be replaced.

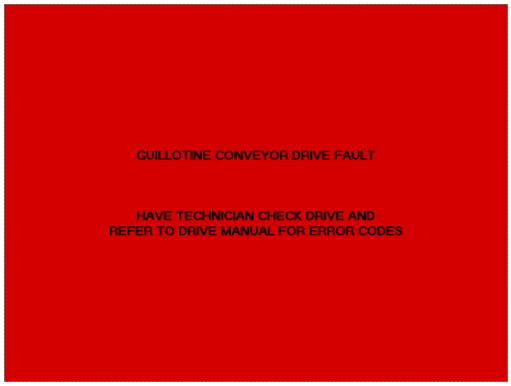

Brush Guard out of place

- Check to make sure the Brush Guard is fully seated in the down position
- Make sure nothing is interfering with the Brush Guard Sensor such as food material
- Make sure the Brush Guard sensor cable is connected and is not damaged
- If the problem persists, the sensor may need to be replaced



Brush Drive Fault

- Check the error message on the drive and refer to the drive's User Manual.
- Try resetting the drive by cycling the power.
- If the problem persists, the drive may need to be replaced.

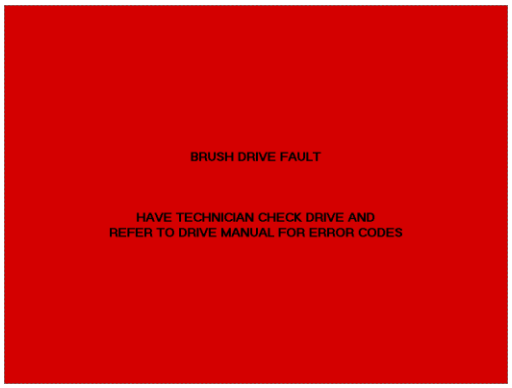

Cutter Guard out of place

- Check to make sure the Cutter Guard is fully seated in the down position
- Make sure nothing is interfering with the Cutter Guard Sensor such as food material
- Make sure the Cutter Guard sensor cable is connected and is not damaged
- If the problem persists, the sensor may need to be replaced



Cutter Drive Fault

- Check the error message on the drive and refer to the drive's User Manual.
- Try resetting the drive by cycling the power.
- If the problem persists, the drive may need to be replaced.

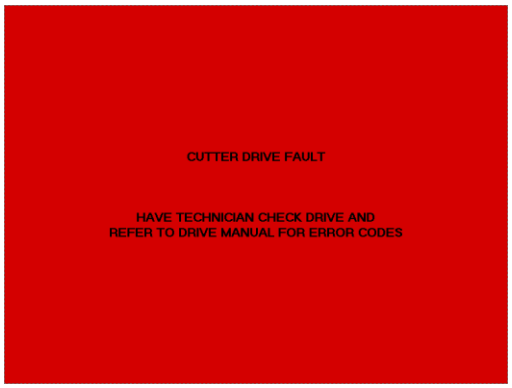

Gauge Roller #1, #2, and #3 Drive Fault

- Check the error message on the drive and refer to the drive's User Manual.
- Try resetting the drive by cycling the power.
- If the problem persists, the drive may need to be replaced.

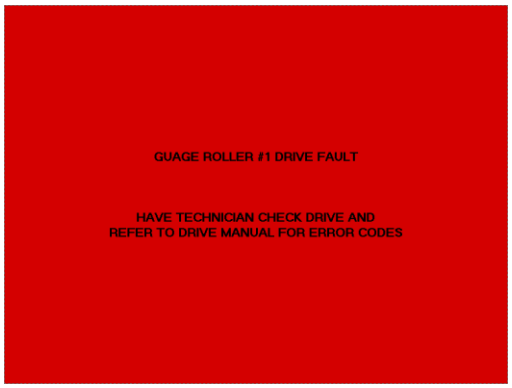

Guillotine did not Extend condition

- Check to make sure nothing is interfering with the guillotine knife and or air cylinder
- Make sure you have sufficient air pressure to run the Guillotine (80 PSI / 5.5 Bars)
- Make sure all pneumatic hoses are connected and not damaged
- Check to make sure air cylinder extend sensor located on the air cylinder housing is not damaged or loose



Guillotine Guard #1 out of place condition

- Check to make sure the Guillotine #1 Guard is fully seated in the down position
- Make sure nothing is interfering with the Guillotine #1 Guard Sensor such as food material
- Make sure the Guillotine #1 Guard sensor cable is connected and is not damaged
- If the problem persists, the Guillotine Guard #1 sensor may need to be replaced

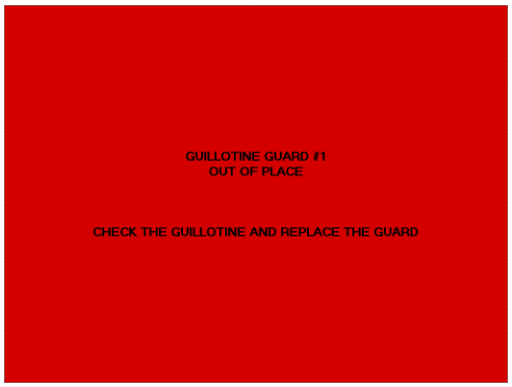

Guillotine Guard #2 out of place condition

- Check to make sure the Guillotine #2 Guard is fully seated in the down position
- Make sure nothing is interfering with the Guillotine #2 Guard Sensor such as food material
- Make sure the Guillotine #2 Guard sensor cable is connected and is not damaged
- If the problem persists, the Guillotine Guard #1 sensor may need to be replaced

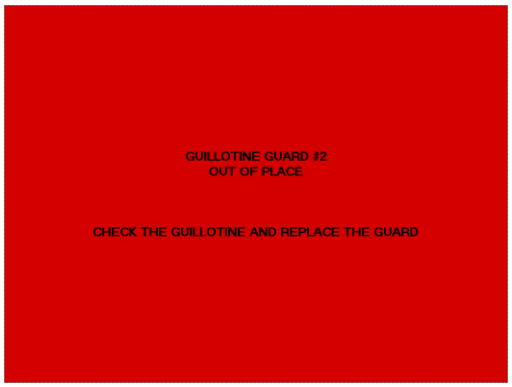

Guillotine did not retract condition

- Check to make sure nothing is interfering with the guillotine knife and or air cylinder
- Make sure you have sufficient air pressure to run the Guillotine (80 PSI / 5.5 Bars)
- Make sure all pneumatic hoses are connected and not damaged
- Check to make sure air cylinder extend sensor located on the air cylinder housing is not damaged or loose



Safety System Reset required condition

- An E-Stop, safety cord, or a safety device (sensor, guard sensor) has been triggered and reset
- The machine requires a safety system reset
- The operator is required to press the red stop button on the main control panel to complete the safety system reset and to restore power to the machine

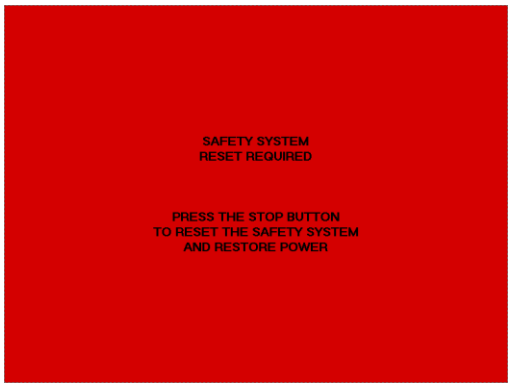

Guillotine is taking longer than the set production rate condition

- The Guillotine cannot keep up with the desired production rate set by the operator
- The operator is required to either increase the Guillotine cuts per minute parameter or, decrease the set production rate

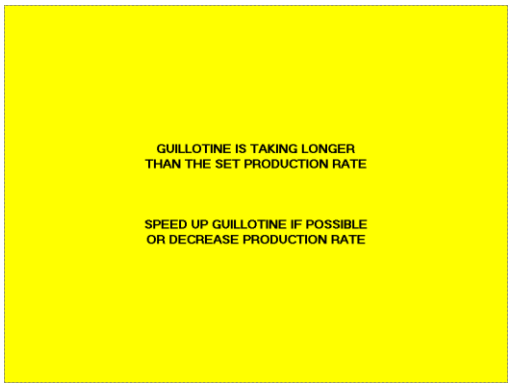

Mitsubishi VFD Settings

Parameter	Description	Factory Setting	Unifiller Setting
7	Acceleration Time	5.0 (s)	0.1 (s)
8	Deceleration Time	5.0 (s)	0.1 (s)
73	Input Voltage Selection	1 (0-5V)	0 (0-10V)
79	Operating Mode **DO THIS LAST**	0 (PU/EXT Button)	2 (External Only)
192	ABC Relay Output	99 (Alarm Output)	199 (Inverse Alarm Output)

All other settings are factory default.

Cleaning and Disassembly

In this section, detailed explanations are accompanied by assembly illustrations to demonstrate how different components are assembled. This information is used for reassembling components and assemblies on the SlabLine.

Empty Product from Machine

1. Run the SlabLine until material on the Compressor Conveyor belt and Guillotine Conveyor Belt area has completely run through the SlabLine.
2. Turn power switch to OFF.
3. Turn the air supply OFF.



Abrasive materials may damage the finish on this equipment.

Use of the following types of cleaning agents is not acceptable and may cause damage to the Machinery that the manufacturer cannot be held responsible for.

Check specifications and warnings on labels of all cleaning products prior to use. If unsure of the product, test the product in an inconspicuous spot on the machine where the result of the products effect on the machine will not be easily noticed.

- Cleaning agents containing chlorine or chlorides may cause spotting.
- Abrasive cleaning pads (SOS pad, ScotchBrite, etc…) will cause damage to the machines finish.
- Acidic or alkaline solutions can cause corrosive reactions between dissimilar metals as are found in this machine such as bearing housings and electrical conduit.
- Solvent, Aromatic or chemically reacting solutions may cause damage to synthetic Materials such as rubber contained in the electrical seals or seals of mechanical drive components.

Removing the SlabLine Conveyor belts

1. Compressor Roller Conveyor Belt

To remove the Compressor Roller Conveyor Belt, the operator must follow proper lock out procedures as described above in this document.

a. Remove E-STOP cable assembly arms (3 cable arms, 9 Bolts).

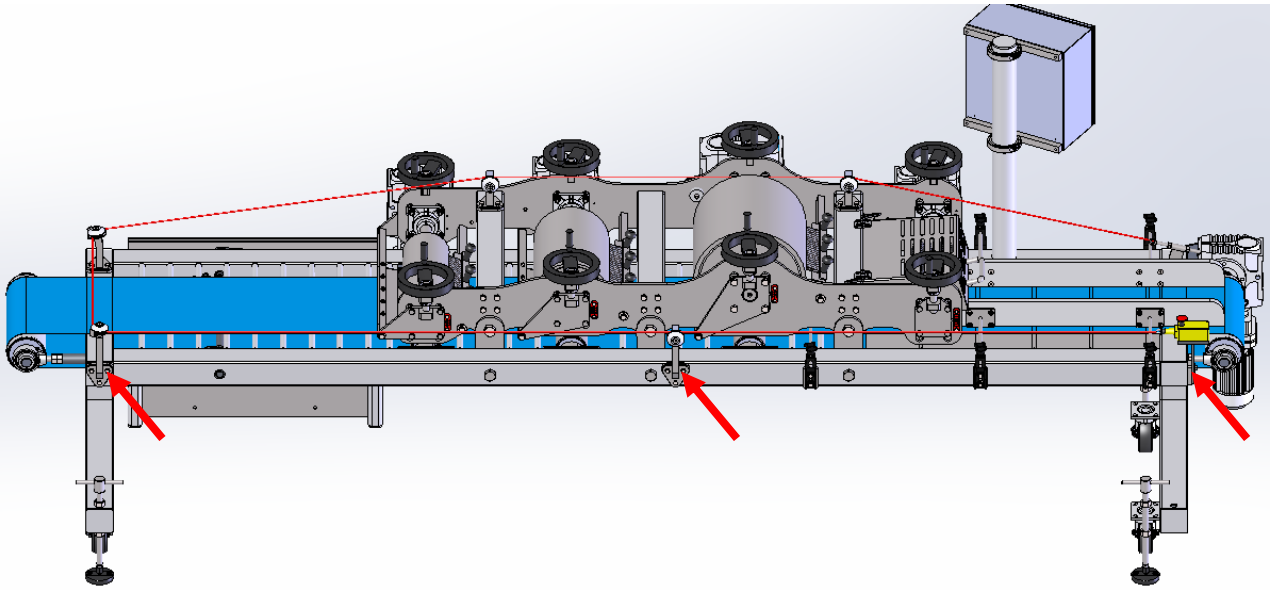

b. Remove cantilever support plates (3 plates, 6 Bolts).

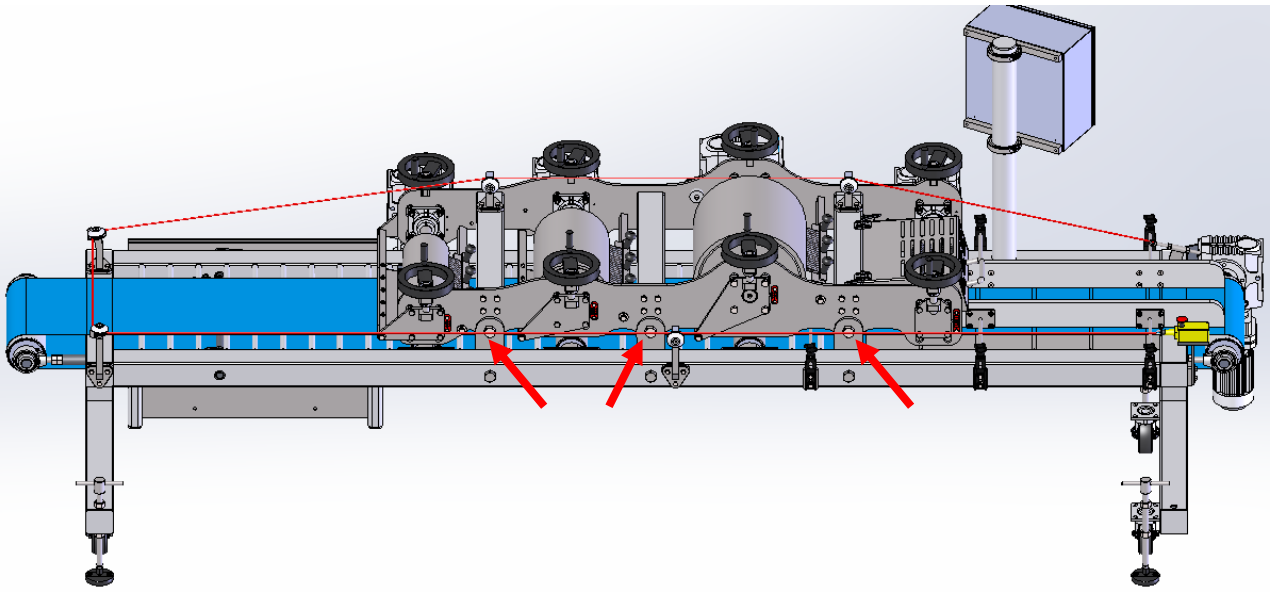

Compressor Roller Conveyor Belt Removal Continued…

c. Remove adjustable UHMW guides (2 UHMW Guides) and backside Guide mounting brackets (3 Mounting Brackets).

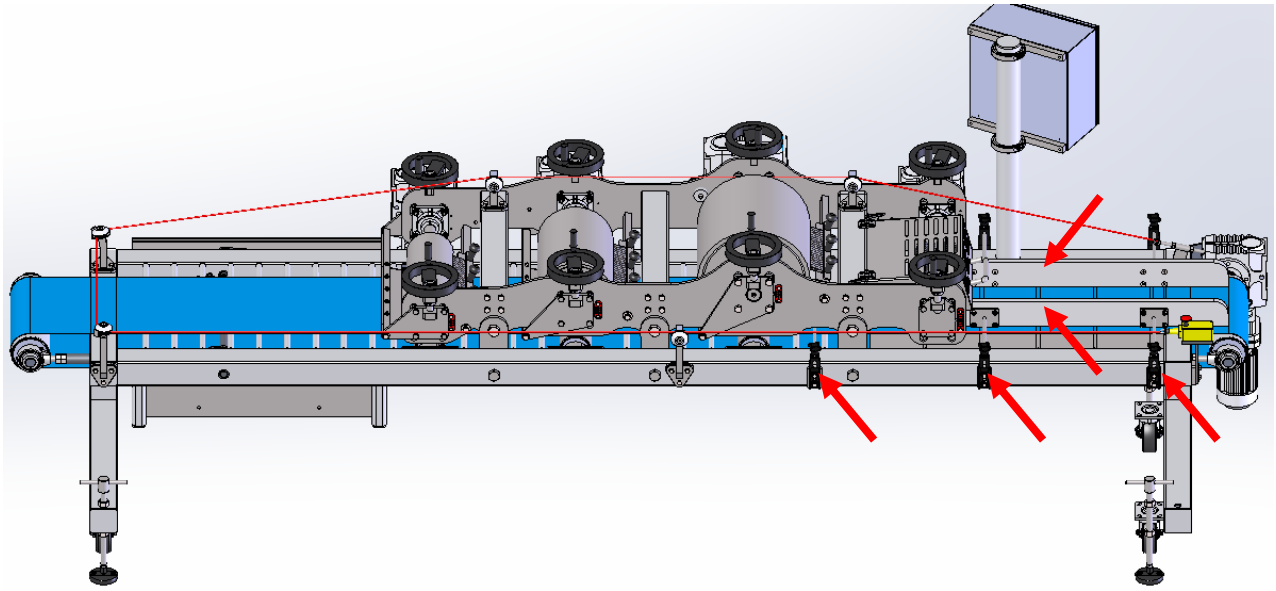

d. Remove index pin and lift belt release arm on front side of machine. Once the lever is raised and belt tension is released, the technician may continue to slide the belt off from the conveyor bed for cleaning and maintenance.

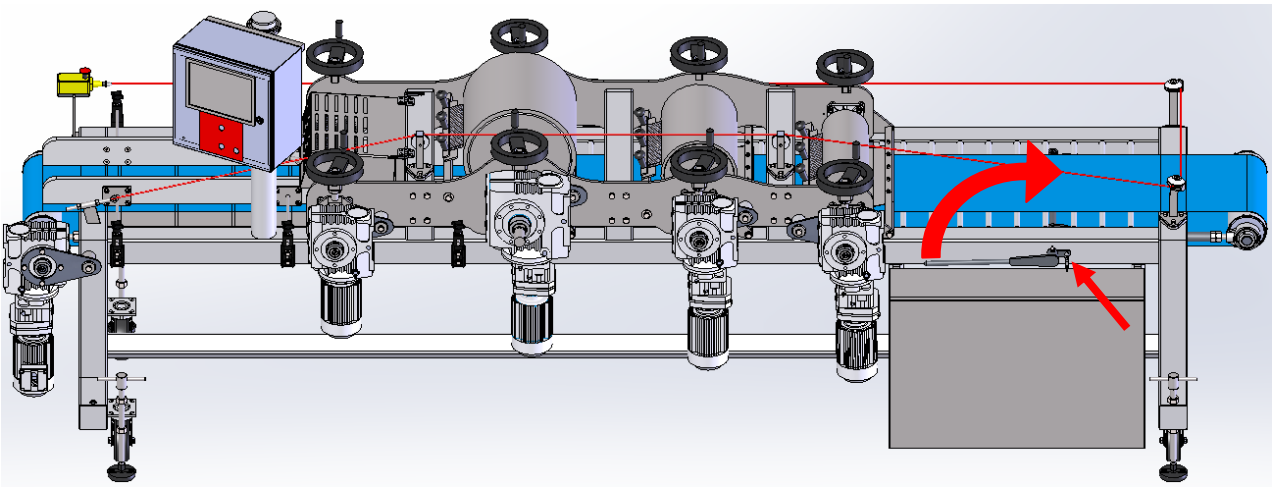

e. To reassemble the Compressor Roller Conveyor Belt, Follow these instructions in reverse.

2. Guillotine Conveyor Belt

To remove the Compressor Roller Conveyor Belt, the operator must follow proper lock out procedures as described previously in this document.
Be sure to raise the Round Cutter Blades all the way up before attempting to remove the belt.

a) First, lift up Guillotine Knife Guard
b) Remove the rear UHMW plow assembly

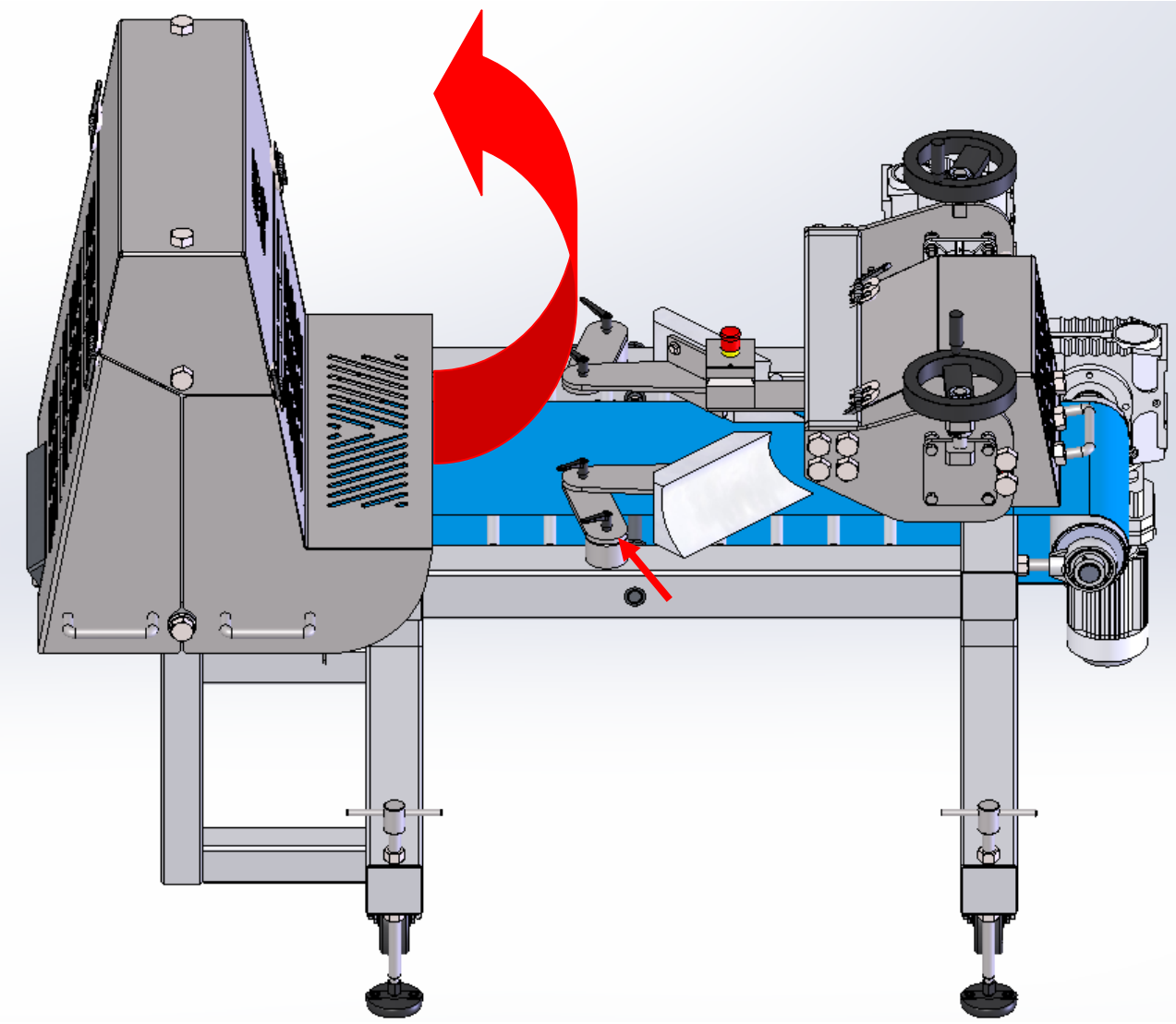

Guillotine Conveyor Belt Removal Continued…

c) Remove index pin and lower the belt release arm located on the front side of machine. Once the lever is raised and belt tension is released, the technician may continue to slide the belt off from the conveyor bed for cleaning and maintenance

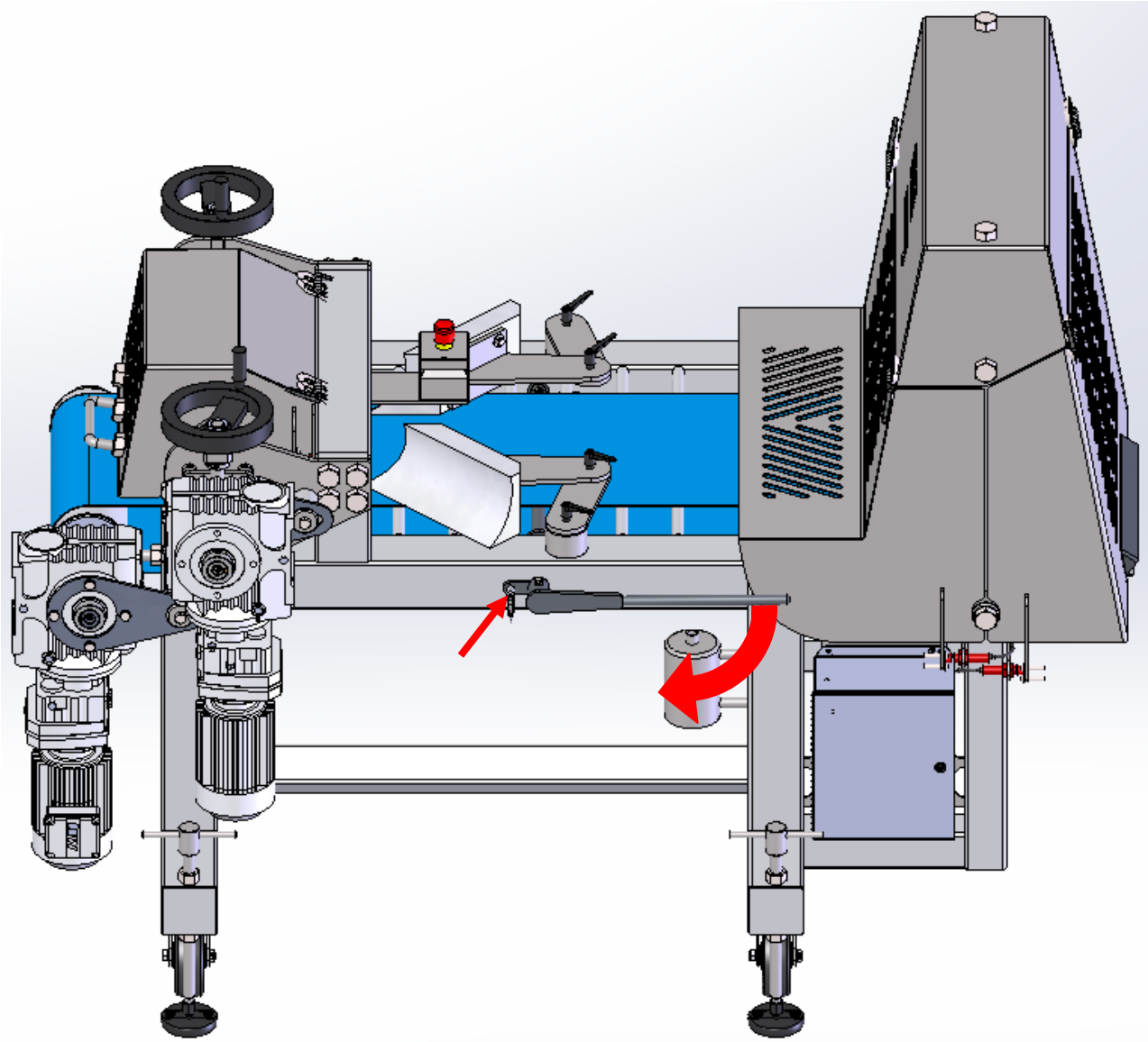

d) To reassemble the Guillotine Conveyor Belt, Follow these instructions in reverse.

Guillotine Round Cutter Blade Removal

To remove the Round Cutter Blades, the operator must follow proper lock out procedures as described above in this document before attempting to remove the Round Cutter Blades.

a. First, lift Round Cutter Blade guard up out of the way

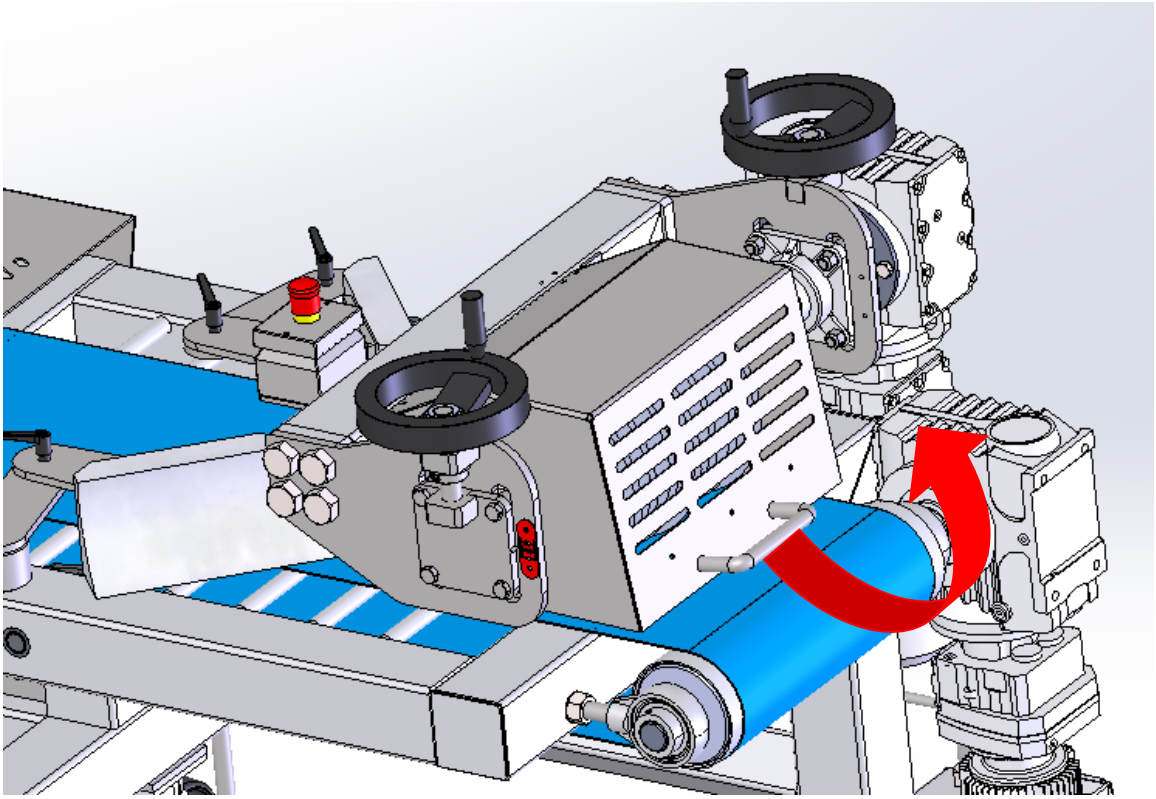

Round Cutter Blades Removal Continued…

b. Remove all 4 bolts from the support plate on the back side of the machine. **Also, do not forget to loosen off both set screws on the shaft bearing or components may bind and damage to the machine may occur.**

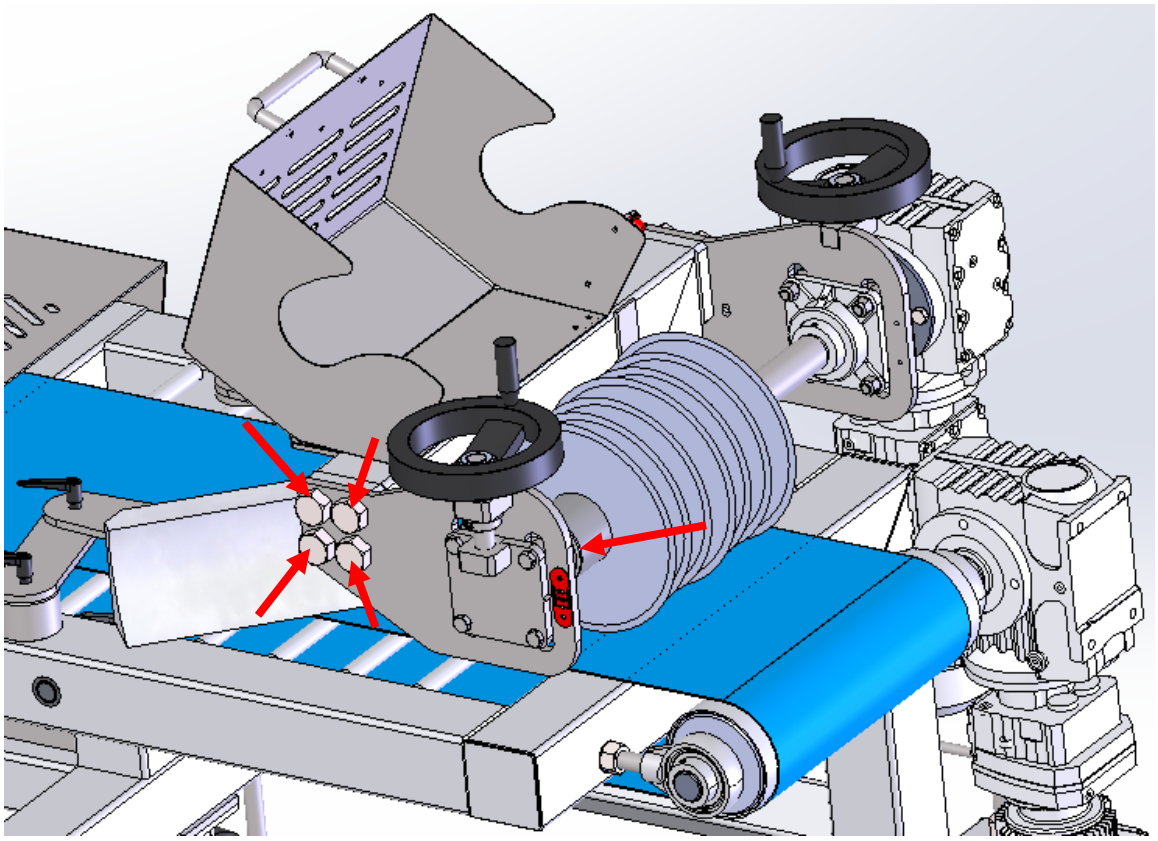

Round Cutter Blades Removal Continued…

c. Once the support plate is removed, remove the large hex nut, compression washer, UHMW spacers, and Round Cutter Blades. Be sure to take extra care when removing the Round Cutter Blades as they are sharp and easily prone to damage.

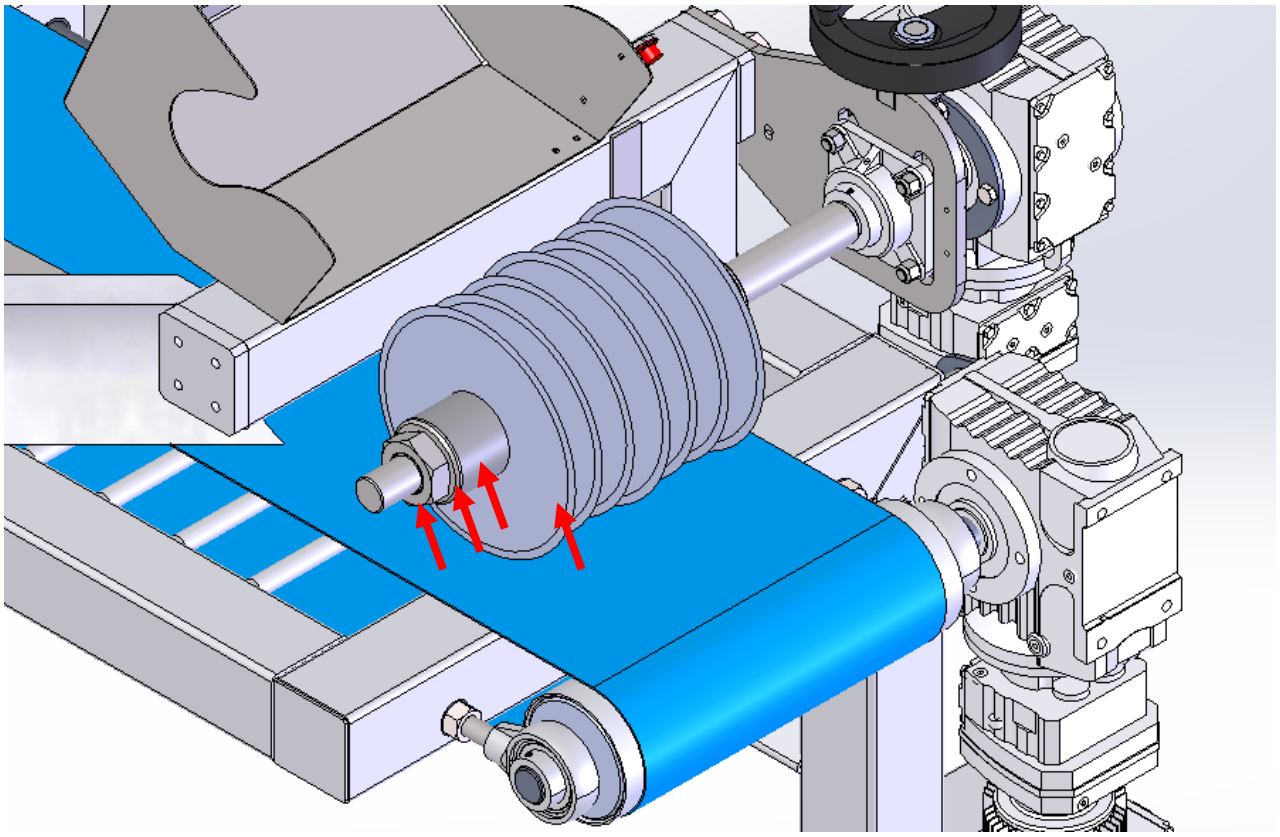

d. To reassemble the Round Cutter Blades, follow these instructions in reverse.

Conveyor Belt Tracking and Tightening

The Conveyor belt is designed to run in the center of the conveyor bed.

If the belt moves excessively to one side, loosen off the Stainless Steel nuts inside the frame and then turn the Stainless Steel nut on the outside of the frame to tighten the “high” side to steer the belt back to center.

If the conveyor belt is slipping, loosen off the Stainless Steel nuts inside the frame and then turn both Stainless Steel nuts on the outside of the frame to increase the tension of the conveyor belt consistently for each side of the conveyor belt.

Compressor Roller Belt Adjustment

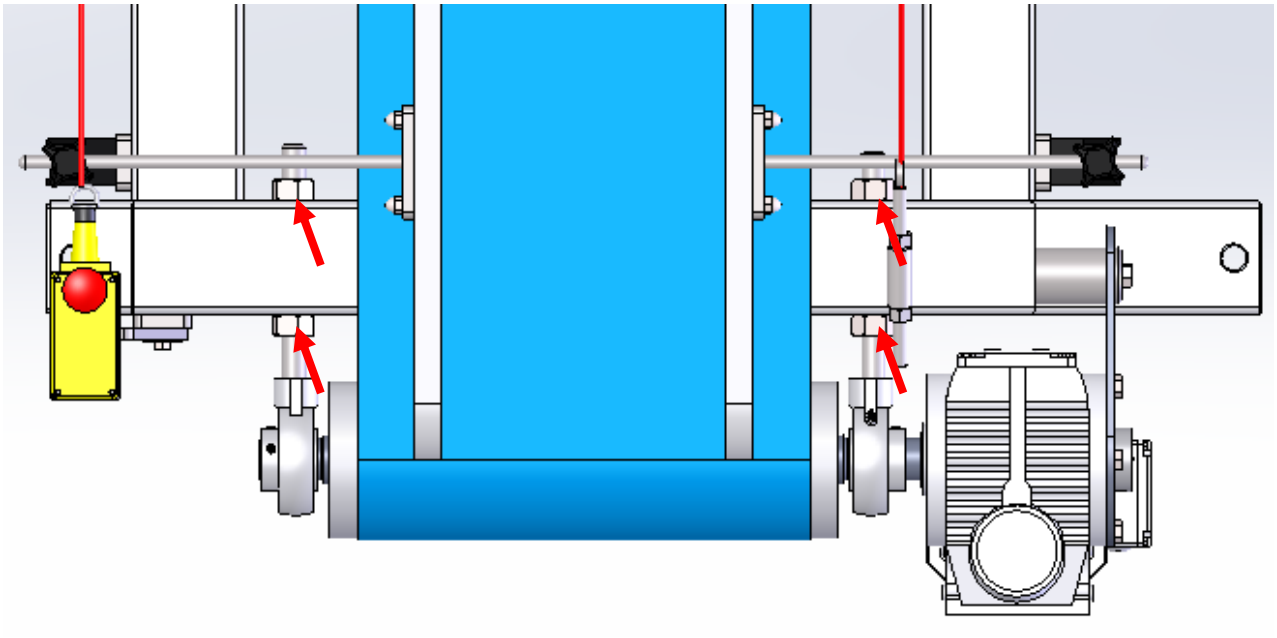

Guillotine Belt Adjustment

Note: Components have been made transparent to better portray where the components to tighten the belt are located.

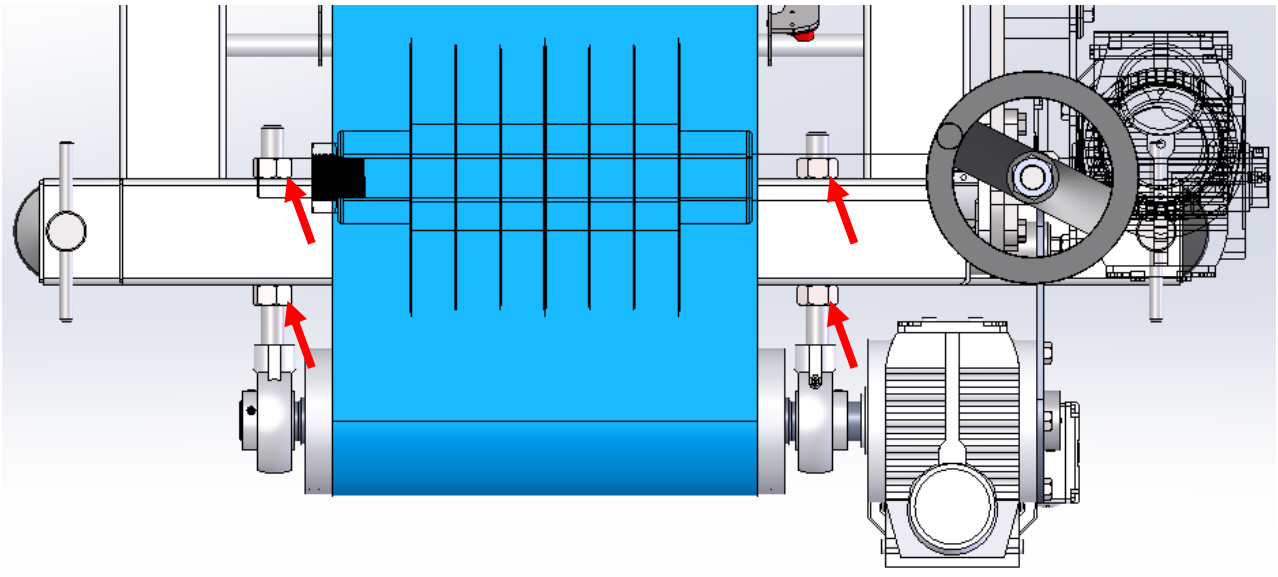

Preventative Maintenance

Routine Maintenance

Daily Maintenance

- After parts have been cleaned, lubricate all seals and moving parts with food grade grease, shortening, or food grade anti seize to prevent seals and surfaces from wearing prematurely.
- Check Teflon coated surfaces for wear and replace or re-coat as necessary.
- Check all shaft bearings and all other bearings for wear. All bearings should turn easily by hand.
- Check to make sure Compression Roller Scrapers are installed properly and are tight against the surface of the Compression Rollers.
- Check to make sure Tab Scrapers are not interfering with the Round Cutter Blades or the Guillotine Conveyor Belt.
- Check to make sure that the belt is not tracking to either side of the Compression Roller machine or the Guillotine machine.
- Check to make sure that the UHMW Transfer plate is installed properly and is not rubbing against the conveyor roller.

Weekly Maintenance

- With the air supply turned off or disconnected, check the air filter/regulator bowl and if necessary clean the bowl and empty any accumulated water.
- All moving parts are required to be inspected for wear (such as bushings, bearings, guide rods, air cylinder, Rotating Cutter Blades, Compression Roller Scrapers, Guillotine Knife, Compression Rollers)

Tri-Monthly Maintenance

- With the air supply turned off, check the condition of the sintered Bronze filter in the air regulator/water filter and replace if contaminated.
- Check and/or replace the Guide Bearings on the Guillotine Knife.
- Grease all grease nipples (Shafts, Bearings, Compression Rollers, Dead Rollers underneath the Compression Rollers, Drive shafts, Conveyor drive rollers, Rotating Cutter Blade shaft)

Sew Eurodrive Manual for motors

Sew Eurodrive Manual for Gearboxes

Spare Parts List

Mechanical Spare Parts

Category	Part Description	FME Part #	Recom.
MEC	Lever Lock Hinge	SL-M-001	2
MEC	3/8" Push Button Belt Tensioner Release Pin	SL-M-002	1
MEC	Guillotine Knife Guide Bushing	SL-M-003	4
MEC	SEW Gear Motor 2.4 RPM - 67 Gearbox w/ Gear Reducer	SL-M-004	1
MEC	SEW Gear Motor 4.0 RPM - 67 Gearbox w/ Gear Reducer	SL-M-005	1
MEC	SEW Gear Motor 5.3 RPM - 67 Gearbox w/ Gear Reducer	SL-M-006	1
MEC	SEW Gear Motor 83 RPM - 67 Gearbox w/ Gear Reducer	SL-M-007	1
MEC	SEW Gear Motor 1.8 RPM - 77 Gearbox w/ Gear Reducer	SL-M-008	1
MEC	Guillotine Conveyor Belt	SL-M-009	1
MEC	Compressor Roller Conveyor Belt	SL-M-010	1
MEC	Safety E-Stop Cable	SL-M-011	1
MEC	Round Cutter Blade	SL-M-012	3
MEC	Round Scoring Blade	SL-M-013	4
MEC	UHMW Guillotine Knife Transfer Plate	SL-M-014	1
MEC	Brass .375" x 1.5" Square Keyway for shafts	SL-M-015	1
MEC	Guillotine Knife - Teflon Coated	SL-M-016	1
MEC	Air Cylinder Pressure Dissipater Washer	SL-M-017	1
MEC	Brass .5" x 3.250" Square Keyway for shafts	SL-M-018	1
MEC	UHMW Material Loading Guide (Right Side)	SL-M-019	1
MEC	UHMW Material Loading Guide (Left Side)	SL-M-020	1
MEC	Compressor Roller Scraper	SL-M-021	3
MEC	Rotary Brush	SL-M-022	1
MEC	UHMW Conveyor Transfer Plate	SL-M-023	2

Electrical Spare Parts

Category	Part Description	FME PART #	Recom.
ELE	Mitsubishi 1 HP VFD	SL-E-001	1
ELE	Pneumatic Pressure Switch	SL-E-002	1
ELE	Weidmuller Relay SPDT 24VDC TB Style	SL-E-003	1
ELE	Leviton 20A 250V Wash-down Plug	SL-E-004	1
ELE	Leviton Cap For 20A 250V Wash-down Plug	SL-E-005	1
ELE	Techna 2A DPST Breaker	SL-E-010	1
ELE	Techna 5A SPST Breaker	SL-E-011	1
ELE	S&S Motor Protector	SL-E-012	1
ELE	S&S Motor Contactor	SL-E-013	1
ELE	S&S Front Mount Auxiliary Contact (1 NO, 1 NC)	SL-E-017	1
ELE	Main Fuses	SL-E-019	3
ELE	Idec 120W 24V Power Supply	SL-E-022	1
ELE	Techna 24V Blue Pilot Light	SL-E-023	1
ELE	Button Start/Stop Switch	SL-E-029	1
ELE	Button Contact Element 1 NO	SL-E-030	1
ELE	Button Contact Element 1 NC	SL-E-031	1
ELE	Button LED Element Green 24VDC	SL-E-032	1
ELE	Button Emergency Stop Red	SL-E-033	1
ELE	AB Safety Relay MSR127RP	SL-E-037	1
ELE	AB Pull Stop	SL-E-038	1
ELE	AB Cord set for Sensaguard Sensor	SL-E-039	1
ELE	AB Sensaguard Plastic Sensor	SL-E-040	1

Pneumatic Spare Parts

Category	Part Description	FME PART #	Recom.
PNE	2.5" Bore x 5" Stroke Pneumatic Cylinder	SL-P-002	1
PNE	3.5" AIR PISTON	F20750-00	1
PNE	HALL EFFECT SWITCH	PNKIT002	1
PNE	Quick CONNECT CABLE	PNKIT003	1
PNE	3/8 NPT-3/8 TUBE ELBOW	PNKIT004	1
PNE	SOLENOID VALVE	PNKIT007	1
PNE	SOLENOID PLUG	PNKIT008	1
PNE	REGULATOR LRG LIQ FILLED	PNKIT010	1
PNE	SLOW START VALVE	PNKIT011	1
PNE	DRY GAUGE 160PSI 1/8" BACK MOUNT	PNKIT013	1
PNE	3/8 NPT-3/8 TUBE STRAIGHT	PNKIT014	1
PNE	1/4 BRONZE MUFFLER, brass NPT	PNKIT025	1
PNE	PLASTIC 1/2 MUFFLER	PNKIT026	1
PNE	SS BULK HEAD FITTING3/8 AIR-1/4 NPT	PNKIT027	1
PNE	3/8 AIR CONNECTOR	PNKIT039	1

Spare Parts Illustrations

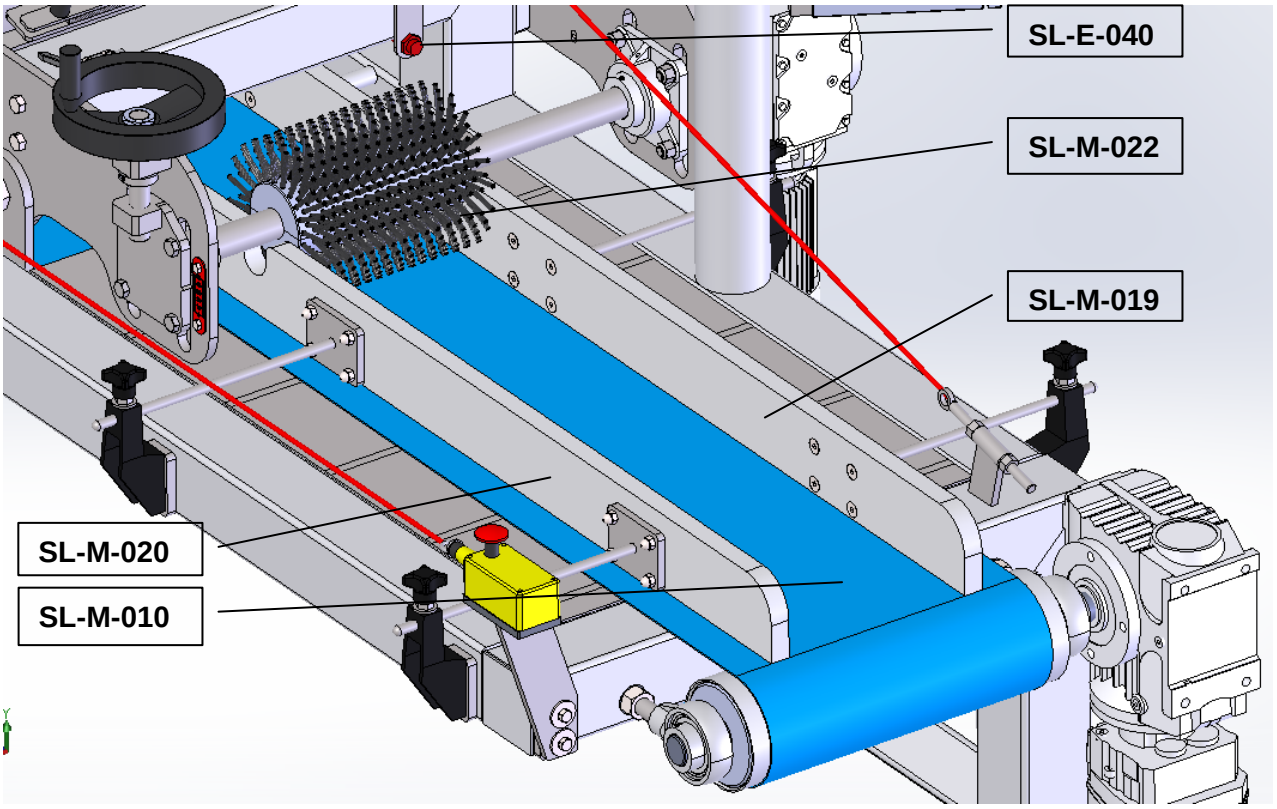

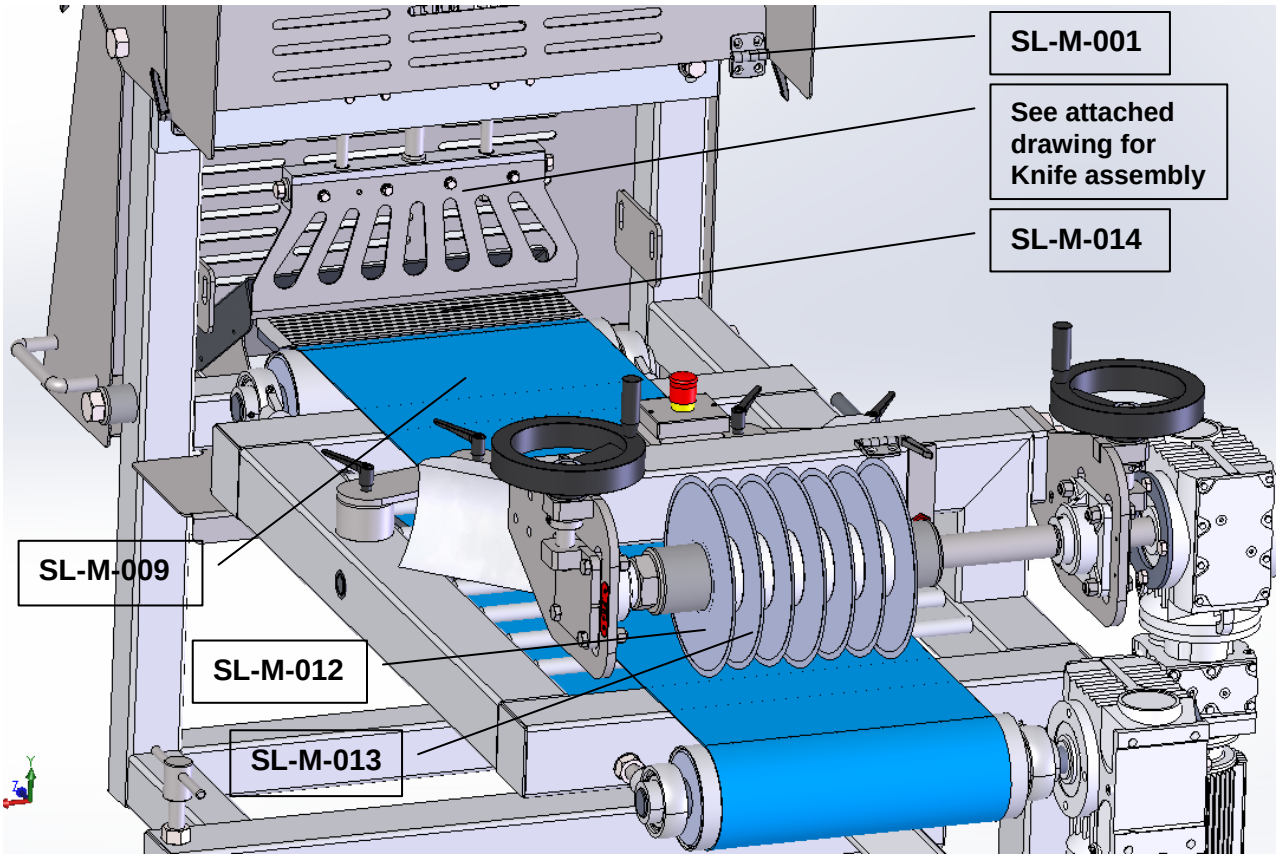

Spare Parts Illustrations

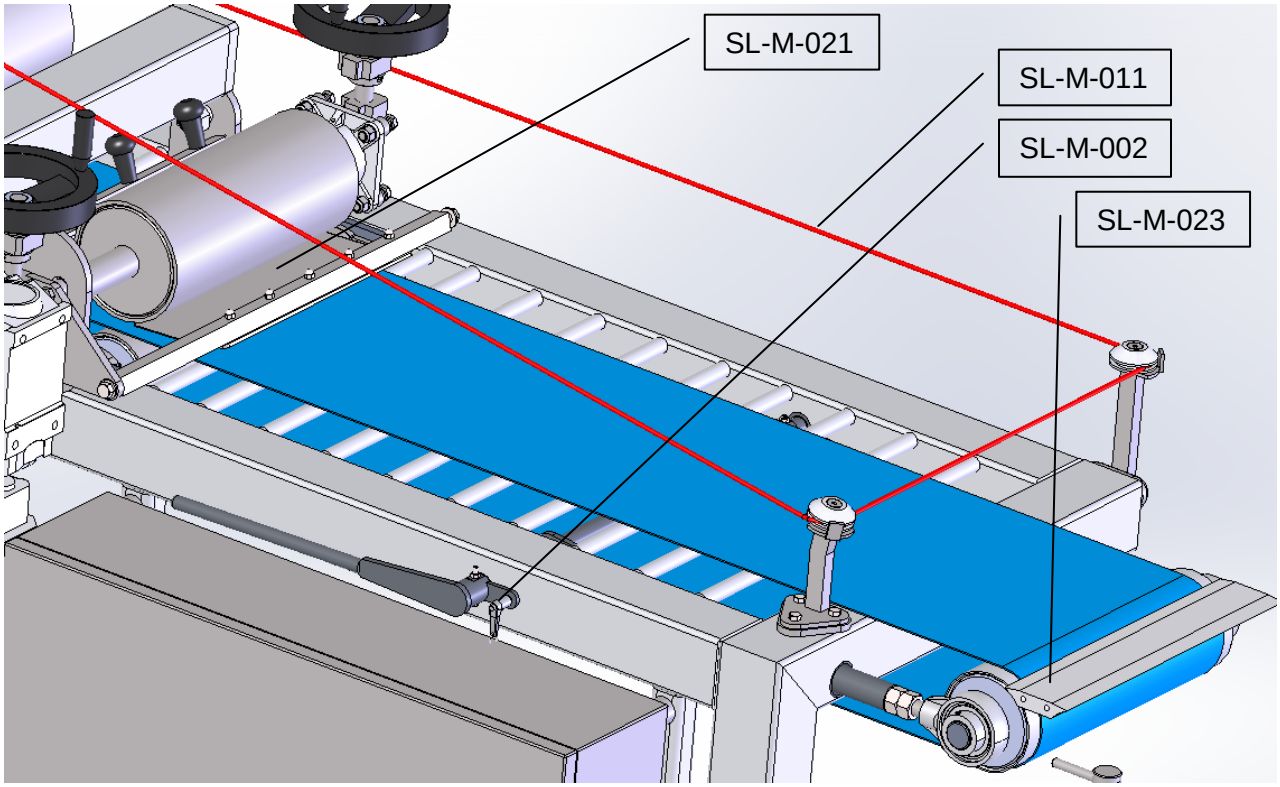

CE Mark

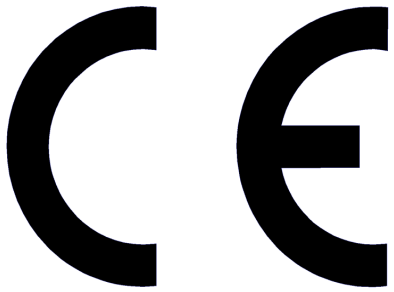

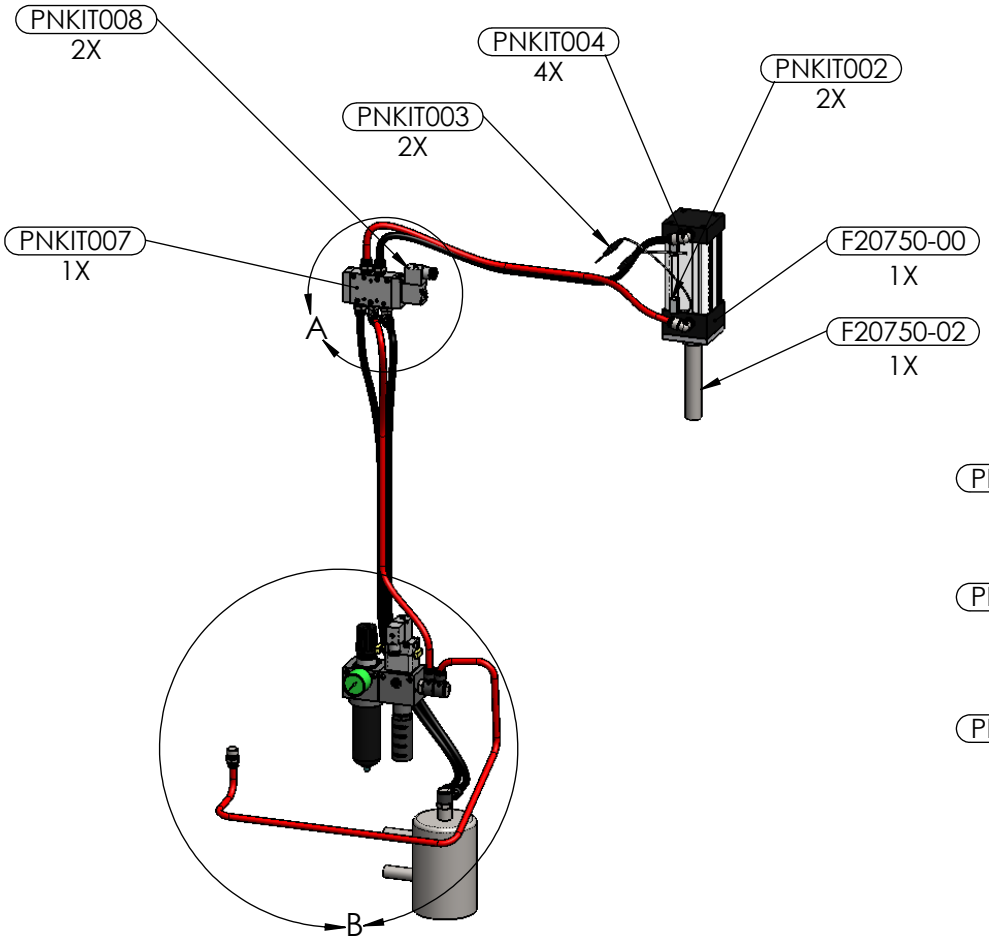

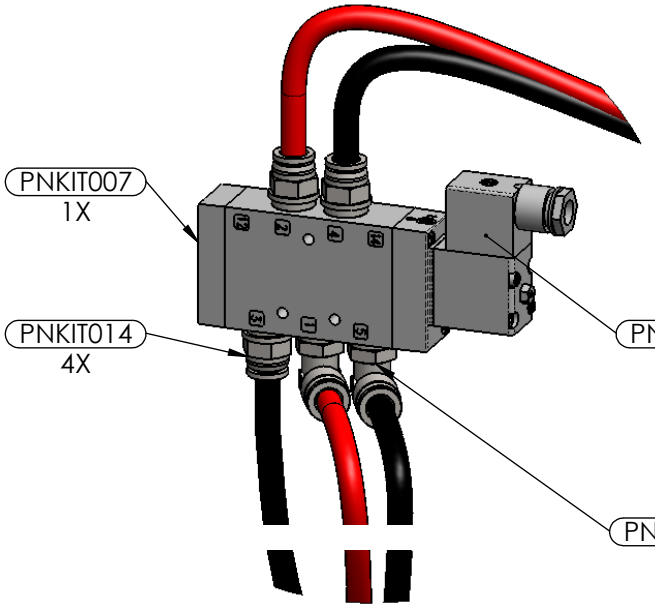

DETAIL A
SCALE 1 : 3

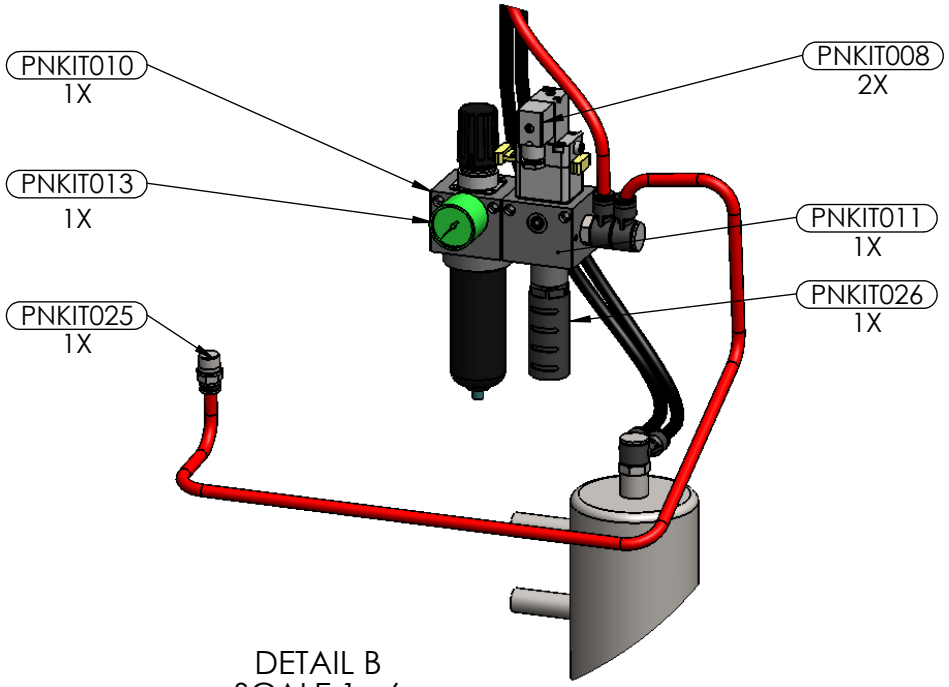

DETAIL B
SCALE 1 : 6

SLABLINE	PNEUMATICS SPARE PARTS DIAGRAM

PARENT FILE - SLABLINE PNEUMATICS DIAGRAM

ITEM NO.	PART NUMBER	DESCRIPTION	QTY.
1	KNIFE ROTATOR BAR	FME-SLAB-041-ASM	1
2	KNIFE MOUNT BAR ASSEMBLY	FME-SLAB-042-ASM	1
3	cutter mount bar_wide	FME-SLAB-083-PRT	1
4	pro snack bar cutter blade	FME-SLAB-084-PRT	1
5	AIR CYLINDER PRESSURE DISIPATOR WASHER	FME-SLAB-085-PRT	1
6	PLUG WASHER	FME-SLAB-086-PRT	2
7	KNIFE GUIDE ROD	FME-SLAB-087-PRT	2
8	AIR CYLINDER 2.5 INCH BORE X 5 INCH STROKE	SL-P-002	1
9	2639T26	GUIDE BUSHING PTFE	4
10	flat washer type a narrow_ai	1/2" WASHER	4
11	flat washer type a narrow_ai	1/4" WASHER	4
12	lock washer spring regular_ai	1/4" Lock Washer	4
13	lock washer spring regular_ai	5/8" Lock Washer	2
14	FINE THREAD SS BOLT	HEX BOLT (FINE THREAD) 1/2"-20 X 3" LONG	1
15	hex bolt_ai	HEX BOLT 1/4"-20 X 3/4" LONG	4
16	hex bolt_ai	HEX BOLT 5/8"-11 X 2.5" LONG	2
17	hex bolt_ai	HEX BOLT 1/2"-13 X 5" LONG	4

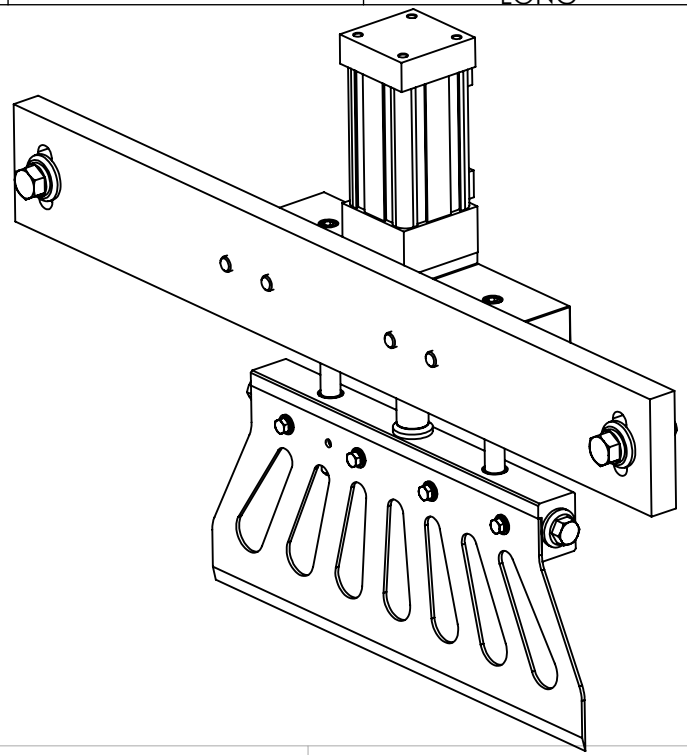

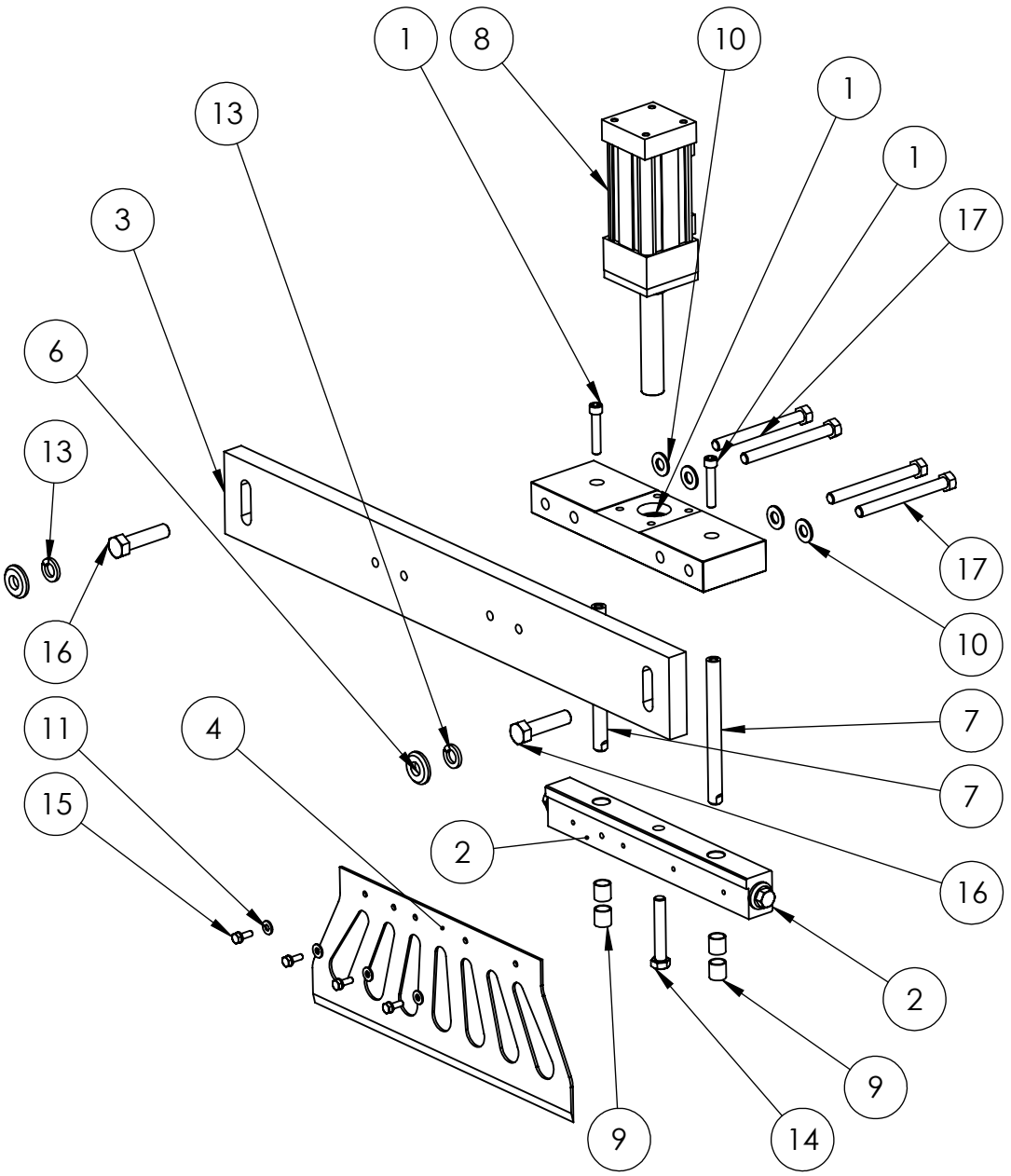

BAR GUILLOTINE CUTTER ASSEMBLY
FME-SLAB-013-ASM

5 4 3 2 1

SLAB LINE

UNIFILLER
SYSTEMS INC

CUSTOMER	PRO SNACK				
WORK ORDER:	N/A				
TITLE	SLAB LINE				
DRAWN ADK	APP ADK	SCALE NTS	DATE JAN-06-2015		
PAGE NO.	TITLE PAGE				
DWG. NO.	EL00-00000-PB			REV. A	

220VAC/3PH/20AMP/60HZ

80273-00
80274-00

POWER CORD 4 X AWG12 600V
81275-00

GRN/YEL

EARTH GROUND

ENSURE PROPER GROUNDING

FIELD ENCLOSURE

SPG

ENCLOSURE 36X24X10

L1 BLK L2 RED L3 BLU

PSW105

POWER DISCONNECT SWITCH
81645-00
81647-00
81649-00

USE A DEDICATED CONDUCTOR SIZED NOT LESS THAN THE POWER CONDUCTORS FROM THE EARTH GROUND TO THIS MAIN PANEL'S SINGLE POINT GROUND TERMINATION POINT LOCATED AT THE BOTTOM OF THE ENCLOSURE

BLK BLK BLK

CLASS J FUSES
20AMP
TIME DELAY

110 111 112

#12 BLK TEW

#12 BLK TEW

#12 BLK TEW

ALL 230V WIRE FOR 110, 111, AND 112 12 AWG. ALL OTHER 230V 14 AWG.

110 111 112

BLK BLK BLK

MSP111
CIRCUIT BREAKER/OL
6.3-10AMP

C416

110 BLK 1 T1 2 L1 T1 BLK 113 R
111 BLK 3 T2 4 L2 T2 BLK 114 S
112 BLK 5 T3 6 L3 T3 BLK 115 T
SPG GRN/YEL PE

SINK SOURCE

MOVE JUMPER TO SOURCE

MAIN CONVEYOR VFD
MITSUBISHI 1 HP
VFD111

V I

MOVE SWITCH TO VOLTAGE

2 SIGNAL 0-10V
5 ANALOG COM
SC SAFETY COMMON
S1 SAFETY IN 1
S2 SAFETY IN 2
STF START FORWARD
SD SIGNAL REFERENCE
C ALARM RELAY COMMON
A ALARM RELAY OUTPUT

U M111 T1
V M111 T2
W M111 T3
PE

CBL111

M111
MAIN CONVEYOR MOTOR
0.34 HP

GROUND TO SCREW ON DRIVE CHASSIS

610 AO0 BRN CBL ALG1 BRN
608 AOC BLK BLK

LEAVE DRAIN WIRE PRESENT AND NOT TERMINATED

SPG

ORG SC 418
ORG S1 418
ORG S2 420

O32 936

BLUE 24C
BROWN 24V

I32 913

MSP122
CIRCUIT BREAKER/OL
6.3-10AMP

C418

110 BLK 1 T1 2 L1 T1 BLK 125 R
111 BLK 3 T2 4 L2 T2 BLK 126 S
112 BLK 5 T3 6 L3 T3 BLK 127 T
SPG GRN/YEL PE

SINK SOURCE

MOVE JUMPER TO SOURCE

GAUGE ROLLER #1 VFD
MITSUBISHI 1 HP
VFD122

V I

MOVE SWITCH TO VOLTAGE

2 SIGNAL 0-10V
5 ANALOG COM
SC SAFETY COMMON
S1 SAFETY IN 1
S2 SAFETY IN 2
STF START FORWARD
SD SIGNAL REFERENCE
C ALARM RELAY COMMON
A ALARM RELAY OUTPUT

U M122 T1
V M122 T2
W M122 T3
PE

CBL122

M122
GAUGE ROLLER #1 MOTOR
0.34 HP

GROUND TO SCREW ON DRIVE CHASSIS

616 AO1 BLU CBL ALG1 BLU
608 AOC BLK BLK

LEAVE DRAIN WIRE PRESENT AND NOT TERMINATED

SPG

ORG SC 418
ORG S1 418
ORG S2 420

O33 937

BLUE 24C
BROWN 24V

I33 914

MSP122
CIRCUIT BREAKER/OL
6.3-10AMP

C420

110 BLK T1 2 L1 T1 BLK 146 R
111 BLK T2 4 L2 T2 BLK 147 S
112 BLK T3 6 L3 T3 BLK 148 T
SPG GRN/YEL PE

SINK SOURCE

MOVE JUMPER TO SOURCE

GAUGE ROLLER #2 VFD
MITSUBISHI 1 HP
VFD133

V I

MOVE SWITCH TO VOLTAGE

2 SIGNAL 0-10V
5 ANALOG COM
SC SAFETY COMMON
S1 SAFETY IN 1
S2 SAFETY IN 2
STF START FORWARD
SD SIGNAL REFERENCE
C ALARM RELAY COMMON
A ALARM RELAY OUTPUT

U M133 T1
V M133 T2
W M133 T3
PE

CBL133

M133
GAUGE ROLLER #2 MOTOR
0.245 HP

GROUND TO SCREW ON DRIVE CHASSIS

622 AO2 RED CBL ALG1 RED
608 AOC BLK BLK

LEAVE DRAIN WIRE PRESENT AND NOT TERMINATED

SPG

ORG SC 418
ORG S1 418
ORG S2 420

O34 938

BLUE 24C
BROWN 24V

I34 915

BLK BLK BLK

110 111 112

201 202 203

UNIFILLER SYSTEMS INC

CUSTOMER	PRO SNACK				
WORK ORDER:	N/A				
TITLE	SLAB LINE				
DRAWN ADK	APP ADK	SCALE NTS	DATE JAN-06-2015		
PAGE NO. 1 OF 10					
DWG. NO. EL00-00000-PB				REV. A	

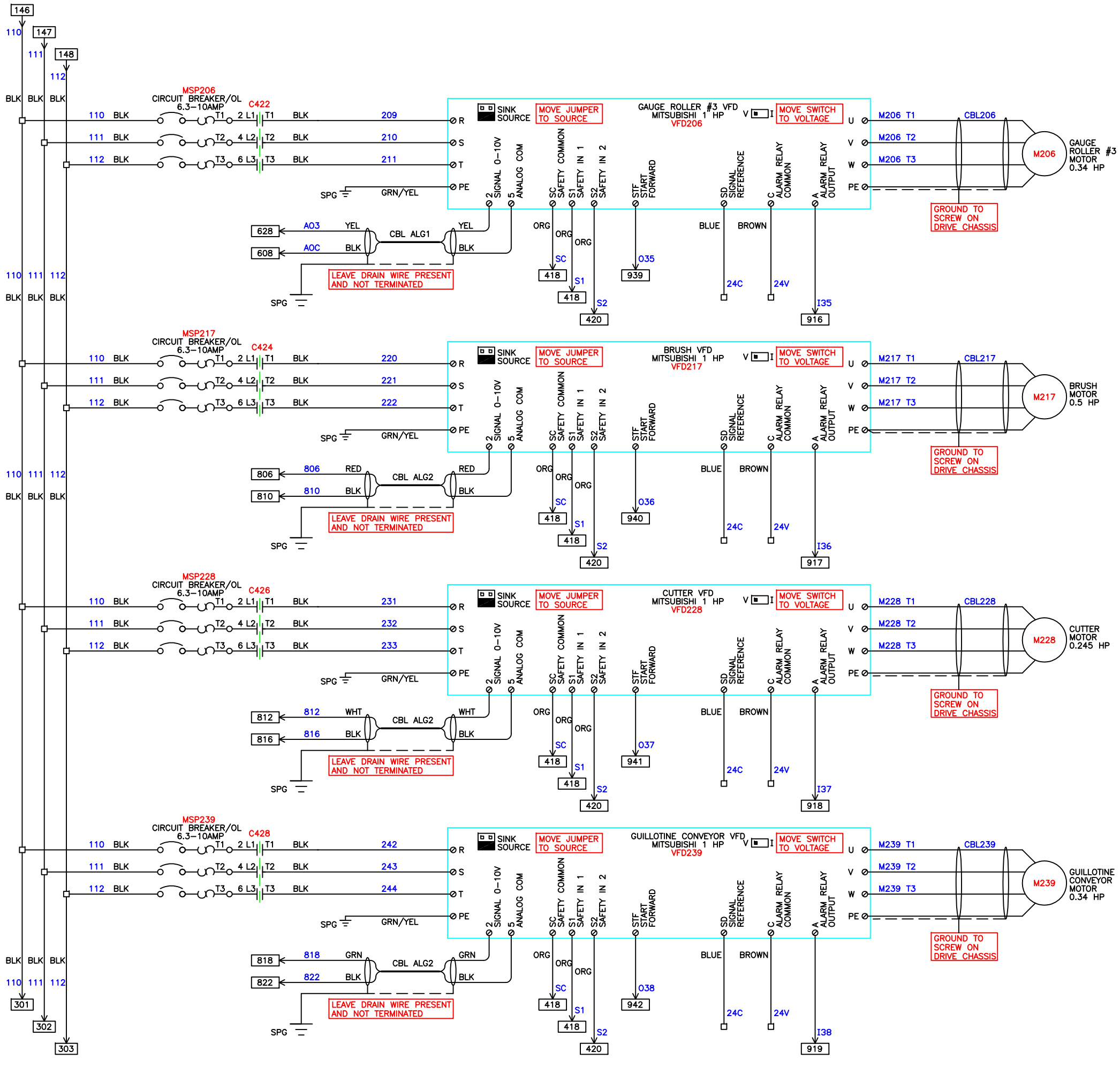

UNIFILLER SYSTEMS INC

CUSTOMER	PRO SNACK
WORK ORDER:	N/A
TITLE	SLAB LINE
DRAWN ADK APP ADK SCALE NTS DATE	JAN–06–2015
PAGE NO.	2 OF 10
DWG. NO.	EL00–00000–PB REV. A

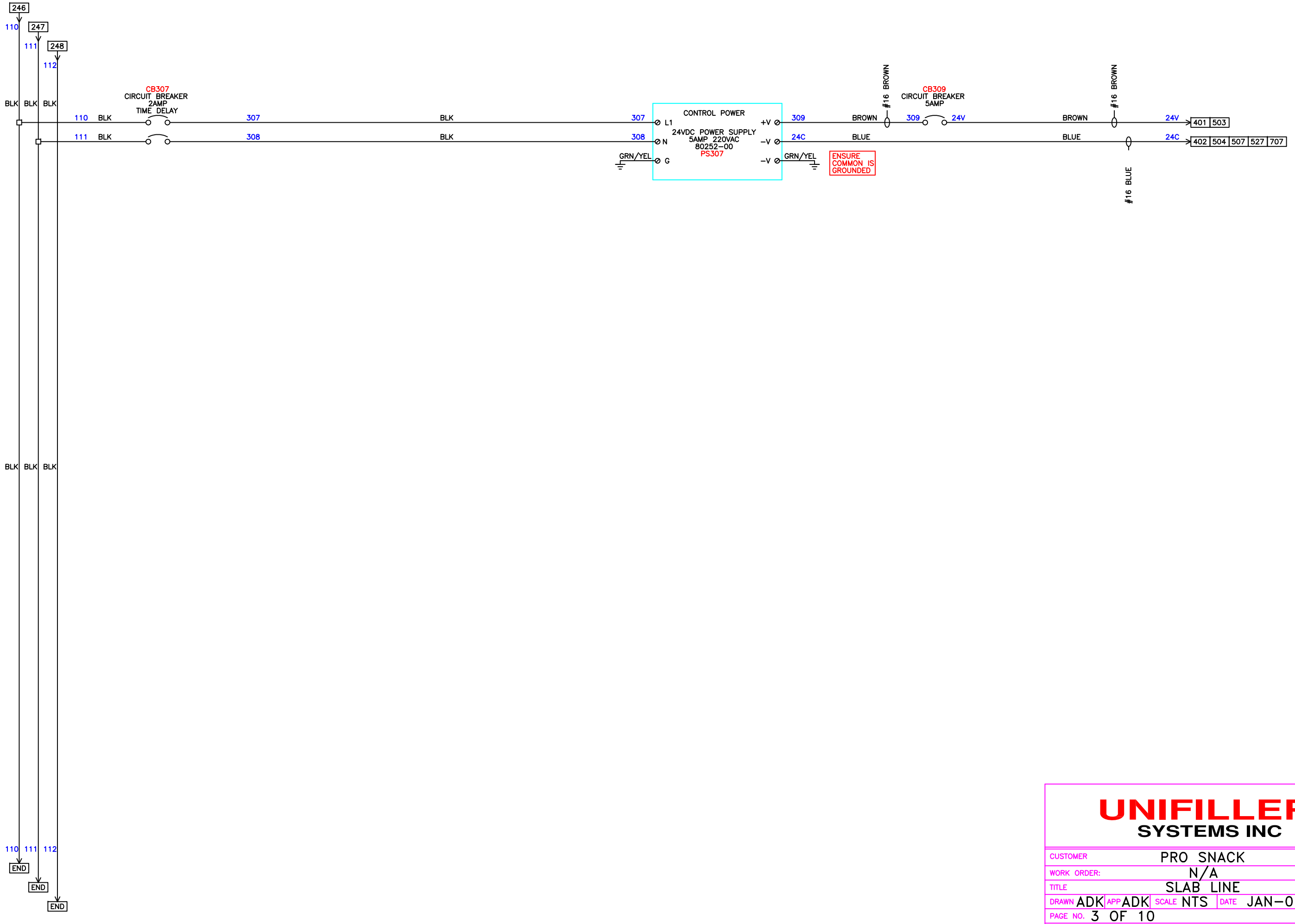

	UNIFILLER SYSTEMS INC
CUSTOMER	PRO SNACK
WORK ORDER:	N/A
TITLE	SLAB LINE
DRAWN ADK / APP ADK / SCALE NTS / DATE	JAN-06-2015
PAGE NO.	3 OF 10
DWG. NO.	EL00-00000-PB
REV.	A

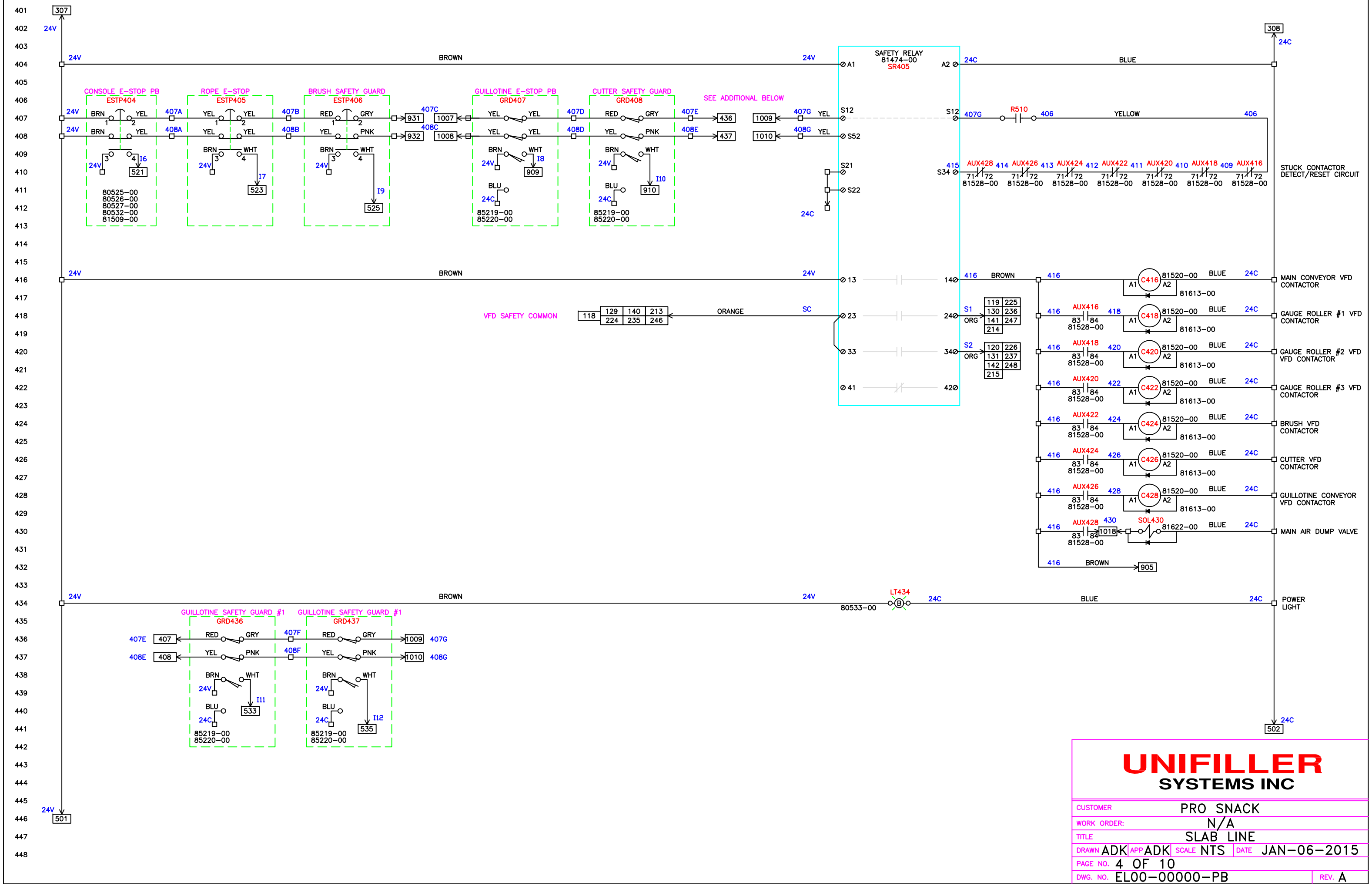

UNIFILLER SYSTEMS INC

CUSTOMER	PRO SNACK				
WORK ORDER:	N/A				
TITLE	SLAB LINE				
DRAWN ADK	APP ADK	SCALE NTS	DATE JAN-06-2015		
PAGE NO. 4 OF 10					
DWG. NO. EL00-00000-PB				REV. A	

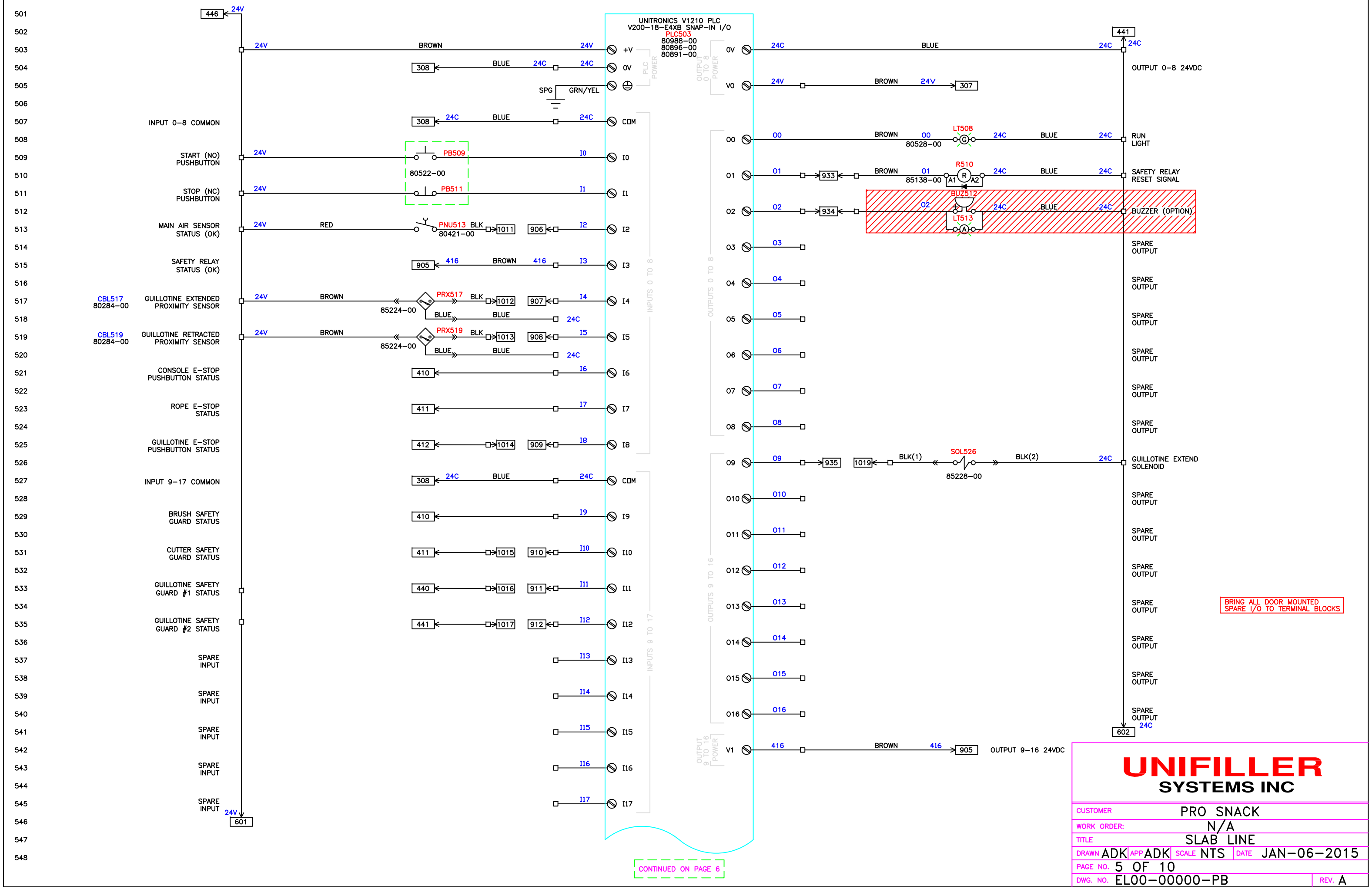

UNIFILLER SYSTEMS INC

CUSTOMER	PRO SNACK
WORK ORDER:	N/A
TITLE	SLAB LINE
DRAWN ADK / APP ADK / SCALE NTS / DATE	JAN-06-2015
PAGE NO.	5 OF 10
DWG. NO.	EL00-00000-PB
REV.	A

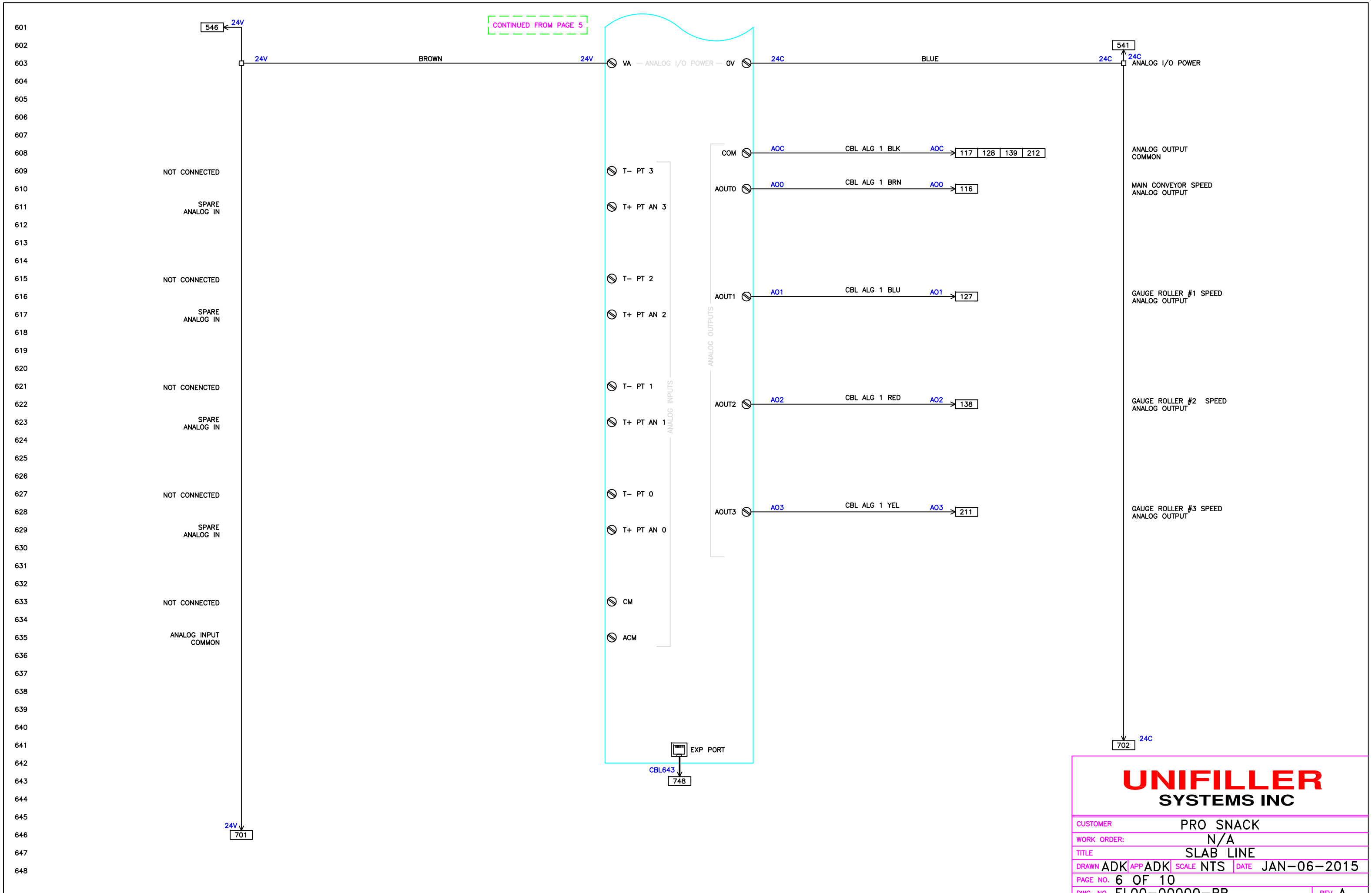

UNIFILLER SYSTEMS INC

CUSTOMER	PRO SNACK
WORK ORDER:	N/A
TITLE	SLAB LINE
DRAWN ADK	APP ADK
SCALE NTS	DATE JAN-06-2015
PAGE NO. 6 OF 10	
DWG. NO. EL00-00000-PB	REV. A

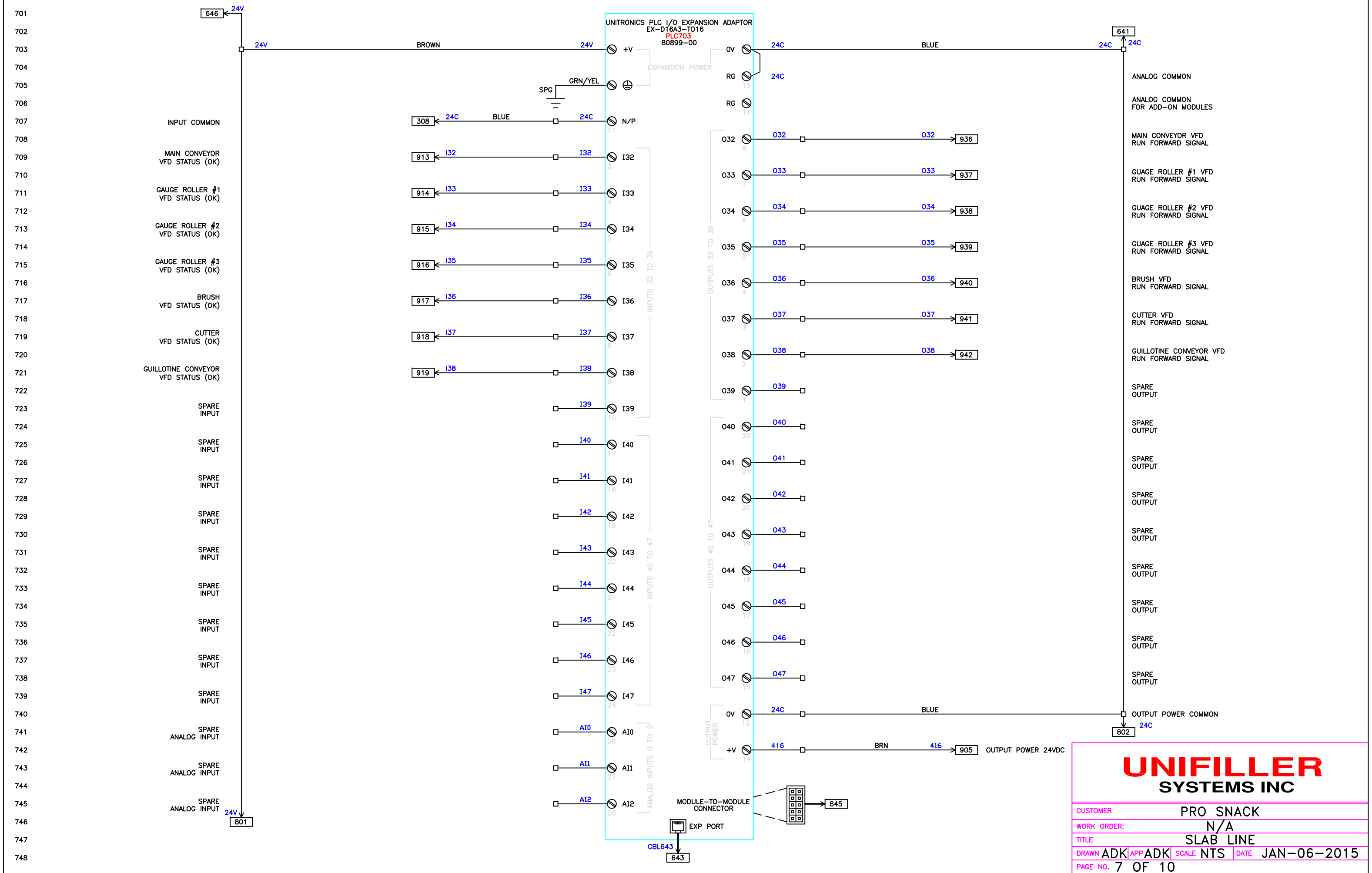

UNIFILLER SYSTEMS INC

CUSTOMER	PRO SNACK
WORK ORDER:	N/A
TITLE	SLAB LINE
DRAWN ADK / APP ADK / SCALE NTS / DATE	JAN-06-2015
PAGE NO.	7 OF 10
DWG. NO.	EL00-00000-PB
REV.	A

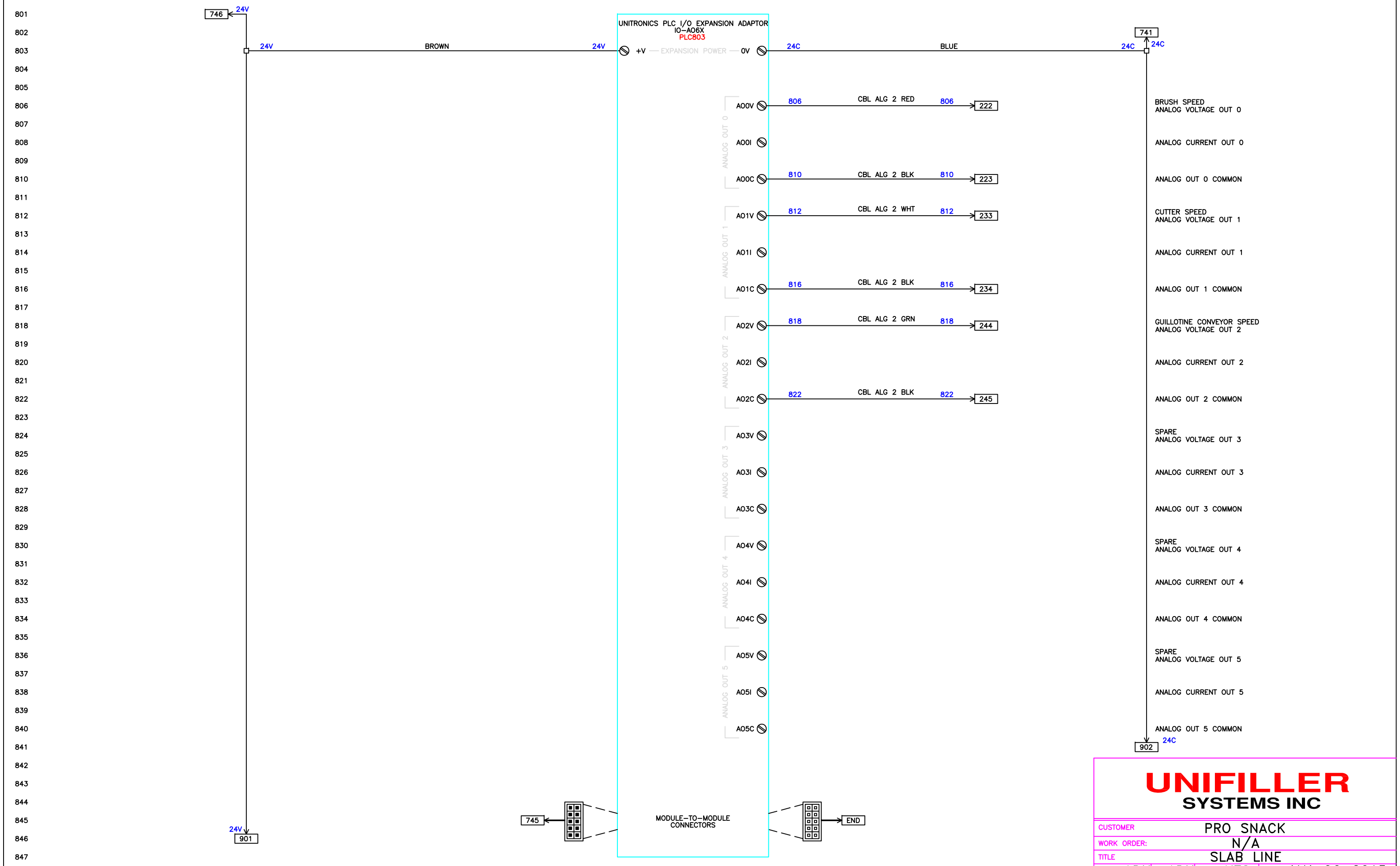

UNIFILLER
SYSTEMS INC

CUSTOMER	PRO SNACK				
WORK ORDER:	N/A				
TITLE	SLAB LINE				
DRAWN ADK	APP ADK	SCALE NTS	DATE JAN-06-2015		
PAGE NO. 8 OF 10					
DWG. NO. EL00-00000-PB				REV. A	

846

24V

841

24C

19 WIRE #18 AWG CABLE PLC1
PIN/WIRE/DESCRIPTION TABLE

PIN #	WIRE LABEL	WIRE COLOUR	FUNCTION DESCRIPTION
1	416/I:03	RED	E STOP CCT OK/V1 OUTPUT POWER
2	I:02	BLACK	MAIN AIR OK
3	I:04	BLUE	GUILLOTINE EXTENDED
4	I:05	ORANGE	GUILLOTINE RETRACTED
5	I:08	WHITE	GUILLOTINE E STOP PB
6	I:10	GREEN	CUTTER SAFETY
7	I:11	RED/BLACK	GUILLOTINE SAFETY 1
8	I:12	BLACK/RED	GUILLOTINE SAFETY 2
9	I:32	BLUE/BLACK	MAIN CONVEYOR VFD OK
10	I:33	ORANGE/BLACK	GAUGE ROLLER 1 VFD OK
11	I:34	WHITE/BLACK	GAUGE ROLLER 2 VFD OK
12	I:35	GREEN/BLACK	GAUGE ROLLER 3 VFD OK
13	I:36	RED/WHITE	BRUSH VFD OK
14	I:37	BLACK/WHITE	CUTTER VFD OK
15	I:38	BLUE/WHITE	GUILLOTINE CONV. VFD OK
16		WHITE/RED	SPARE
17		GREEN/WHITE	SPARE
18		BLUE/RED	SPARE
19		ORANGE/RED	SPARE

332 | 515 | 542 | 742
513 | 1011
517 | 1012
519 | 1013
525 | 1014
531 | 1015
533 | 1016
535 | 1017
120 | 709
131 | 711
142 | 713
215 | 715
226 | 717
237 | 719
248 | 721

19 WIRE #18 AWG CABLE PLC2
PIN/WIRE/DESCRIPTION TABLE

PIN #	WIRE LABEL	WIRE COLOUR	FUNCTION DESCRIPTION
1	24V	RED	24VDC
2	24C	BLACK	24V COMMON
3	407C	BLUE	E-STOP CHANNEL A
4	408C	ORANGE	E-STOP CHANNEL B
5	O:01	WHITE	SAFETY RELAY RESET
6	O:02	GREEN	BEACON (OPTION)
7	O:09	RED/BLACK	GUILLOTINE EXTEND SOLENOID
8	O:32	BLACK/RED	MAIN CONVEYOR RUN SIGNAL
9	O:33	BLUE/BLACK	GUAGE ROLLER 1 RUN SIGNAL
10	O:34	ORANGE/BLACK	GAUGE ROLLER 2 RUN SIGNAL
11	O:35	WHITE/BLACK	GAUGE ROLLER 3 RUN SIGNAL
12	O:36	GREEN/BLACK	BRUSH RUN SIGNAL
13	O:37	RED/WHITE	CUTTER RUN SIGNAL
14	O:38	BLACK/WHITE	GUILLOTINE CONVEYOR RUN SIGNAL
15		BLUE/WHITE	SPARE
16		WHITE/RED	SPARE
17		GREEN/WHITE	SPARE
18		BLUE/RED	SPARE
19		ORANGE/RED	SPARE

407 | 1007
408 | 1008
510
512
526 | 1019
118 | 708
129 | 710
140 | 712
213 | 714
224 | 716
235 | 718
246 | 720

24V

RED

BLACK

24C

24V

1001

24C

1002

UNIFILLER
SYSTEMS INC

CUSTOMER	PRO SNACK				
WORK ORDER:	N/A				
TITLE	SLAB LINE				
DRAWN ADK	APP ADK	SCALE NTS	DATE JAN-06-2015		
PAGE NO. 9 OF 10					
DWG. NO. EL00-00000-PB				REV. A	

948

24V

24V

20 WIRE #16 AWG ARMOURED CABLE GUILLOTINE 1
PIN/WIRE/DESCRIPTION TABLE

PIN #	WIRE LABEL	WIRE COLOUR	FUNCTION DESCRIPTION
1	24V	BLACK/WHITE	24VDC
2	24C	BLACK/WHITE	24V COMMON
3	407C	BLACK/WHITE	E STOP CHANNEL A
4	408C	BLACK/WHITE	E STOP CHANNEL B
5	407G	BLACK/WHITE	E STOP CHANNEL A
6	408G	BLACK/WHITE	E STOP CHANNEL B
7	I:02	BLACK/WHITE	MAIN AIR OK
8	I:04	BLACK/WHITE	GUILLOTINE EXTENDED
9	I:05	BLACK/WHITE	GUILLOTINE RETRACTED
10	I:08	BLACK/WHITE	GUILLOTINE E STOP PB
11	I:10	BLACK/WHITE	CUTTER SAFETY
12	I:11	BLACK/WHITE	GUILLOTINE SAFETY 1
13	I:12	BLACK/WHITE	GUILLOTINE SAFETY 2
14	430	BLACK/WHITE	MAIN AIR DUMP VALVE SOLENOID
15	O:09	BLACK/WHITE	GUILLOTINE EXTEND SOLENOID
16	SPARE	BLACK/WHITE	SPARE
17	SPARE	BLACK/WHITE	SPARE
18	SPARE	BLACK/WHITE	SPARE
19	SPARE	BLACK/WHITE	SPARE
20	SPARE	BLACK/WHITE	SPARE

931 | 407

932 | 408

407 | 436

408 | 437

906 | 513

907 | 517

908 | 519

909 | 525

910 | 531

911 | 533

912 | 535

430

935 | 526

BLACK

941

24C

24C

END

24V

END

UNIFILLER
SYSTEMS INC

CUSTOMER	PRO SNACK				
WORK ORDER:	N/A				
TITLE	SLAB LINE				
DRAWN ADK	APP ADK	SCALE NTS	DATE JAN-06-2015		
PAGE NO. 10 OF 10					
DWG. NO. EL00-00000-PB				REV. A	

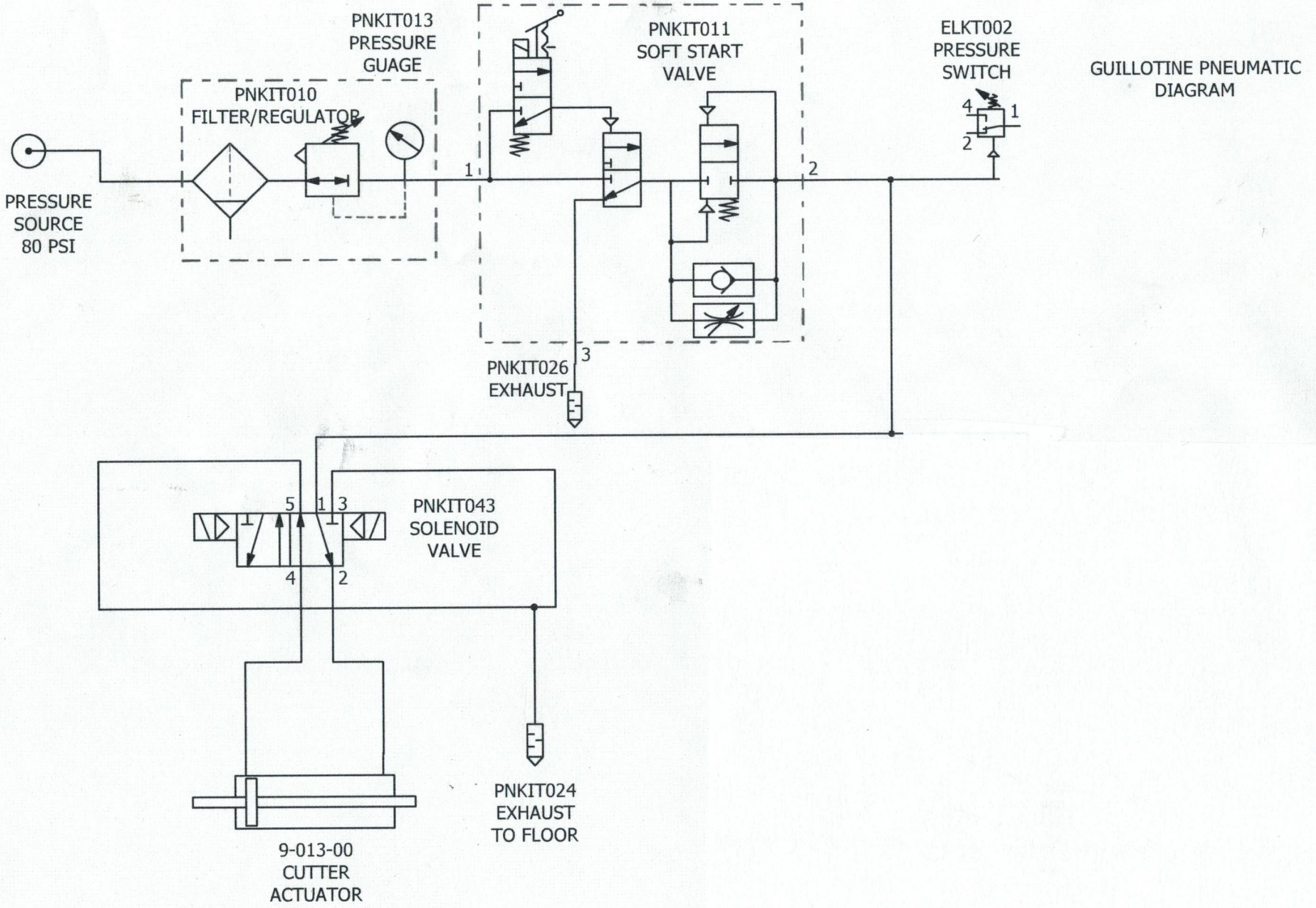
PNKIT013
PRESSURE
GUAGE
PNKIT010
FILTER/REGULATOR
PNKIT011
SOFT START
VALVE
ELKT002
PRESSURE
SWITCH
GUILLOTINE PNEUMATIC
DIAGRAM
PRESSURE
SOURCE
80 PSI
1
2
3
4
1
2
PNKIT026
EXHAUST
5
1
3
4
2
PNKIT043
SOLENOID
VALVE
PNKIT024
EXHAUST
TO FLOOR
9-013-00
CUTTER
ACTUATOR