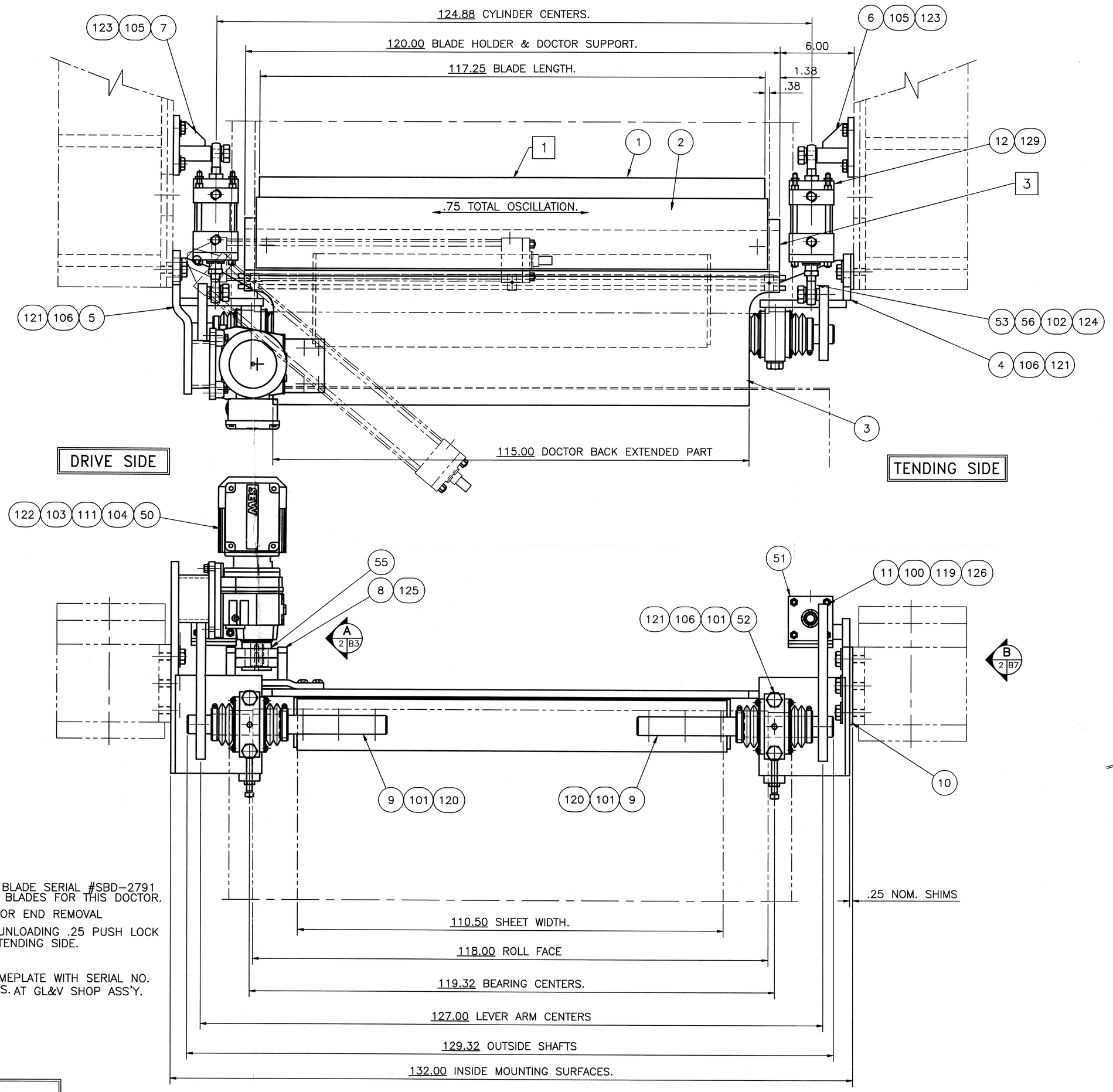

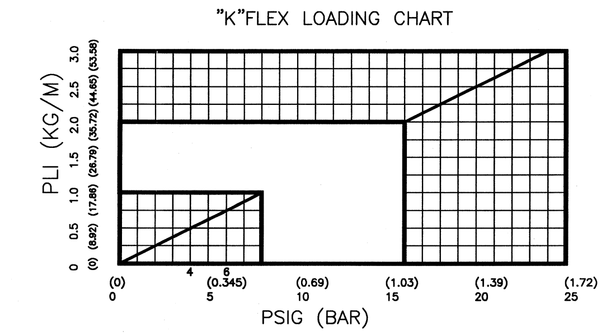

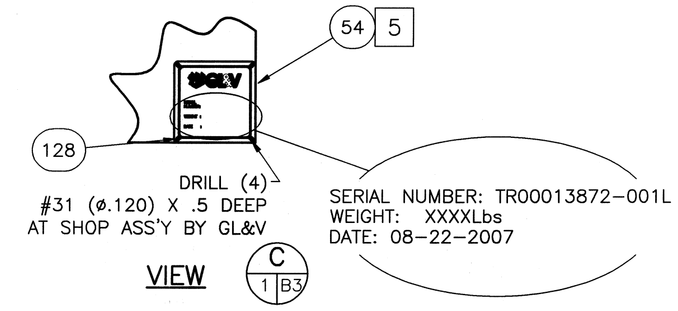

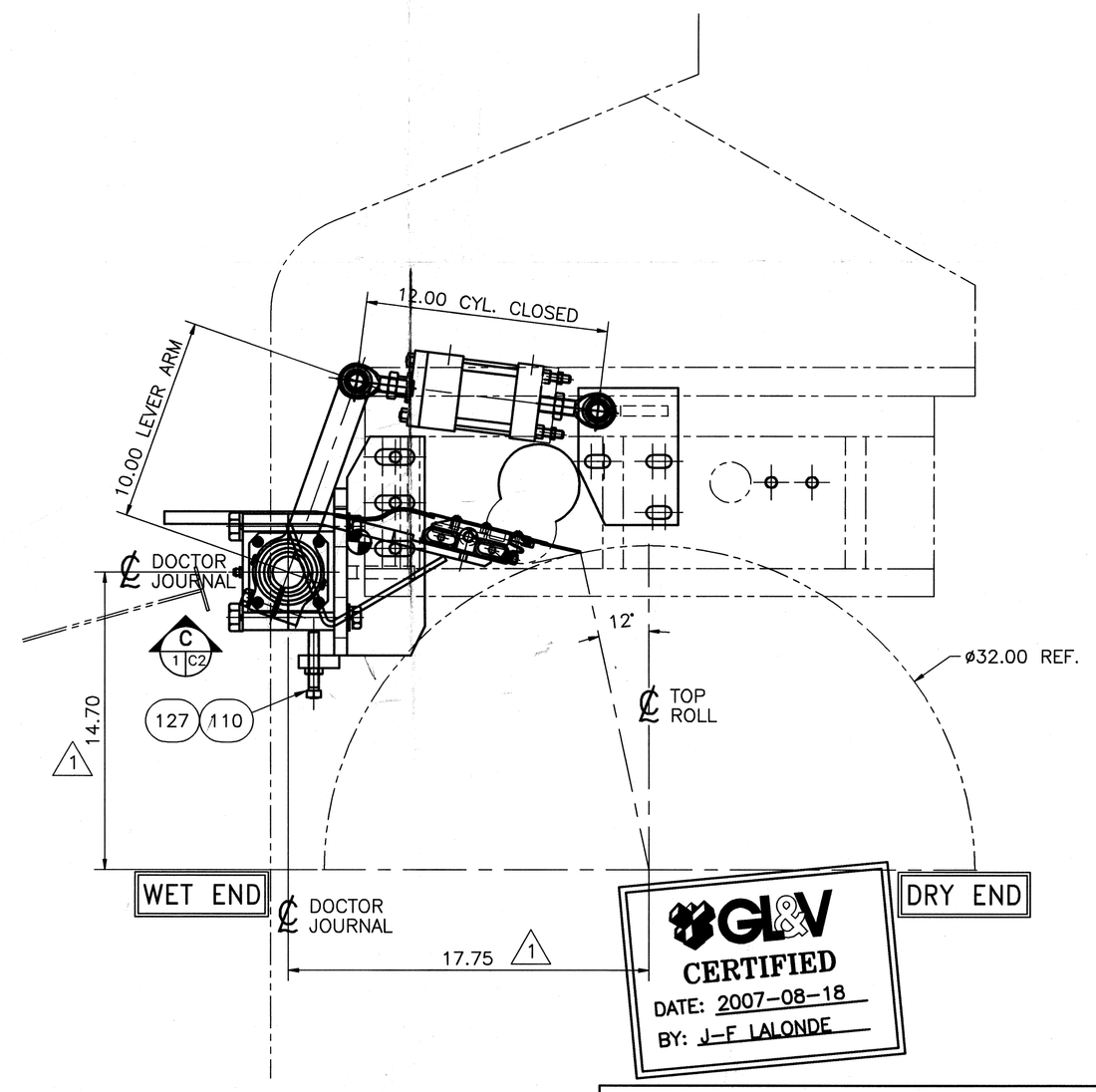

NOTES:

1. ALWAYS QUOTE GL&V BLADE SERIAL #SBD-2791 WHEN ORDERING NEW BLADES FOR THIS DOCTOR.
2. POSITION OF BLADE FOR END REMOVAL
3. BLADE LOADING AND UNLOADING .25 PUSH LOCK AIR CONNECTION ON TENDING SIDE.
5. DOCTOR SUPPORT NAMEPLATE WITH SERIAL NO. TO BE RIVETED ON T.S. AT GL&V SHOP ASS'Y.

DESIGN CRITERIA	
SPEED	1250 FPM
COVER MATERIAL:	RUBBER 1 P&J
ROLL FACE:	118.00"
ROLL DIAMETER:	32.00"

DATE	NAME	APPR.	INIT.	REVISION	ECO	ZONE	NO. REV.
2007-06-20	STELEC	JEALAL		NOTE 4 REMOVED,IT,. 57,58,59 ADDED,NOTE 15 REVISED & NOTE 16 ADDED		PG2	3
08-06-07	JEALAL	JEALAL		BILL OF MATERIAL ADDED			2
05-06-2007	JEALAL	JEALAL		DOCTOR SUPPORT MODIFIED & BEARINGS RELOCATED			1

THIS DRAWING, PROPERTY OF: GL&V Inc. MAY NOT BE COPIED OR DISTRIBUTED WITHOUT AUTHORIZATION.

DATE	APPR DATE	WEIGHT	UNITS
29-05-2007	11.06-2007		☒ INCHES ☐ METRIC

DRAWN	CHECKED	INIT.	APPR.
JEALAL	STELEC		J-F. LALONDE

SIMILAR TO | REF. DOC.

GL&V Pulp and Paper Div.

TITLE: K-FLEX DOCTOR 2ND PRESS TOP ROLL

CATEGORY	SCALE	MACH. NO.	PAGE
PRESS	1:5	#	1 OF 2

JOB NUMBER: TR00013872-001L | DWG NO. A3065-00-0024D 3

\\PTRFS\DESIGNS\dwains\ARCHIVE_TR\GLV_TROIS_RIVIERES\CURRENT_SYSTEM\30\3065\A3065-00-0024D.DWG, 2007-08-15 13:12:27, Stephane.Lecuyer