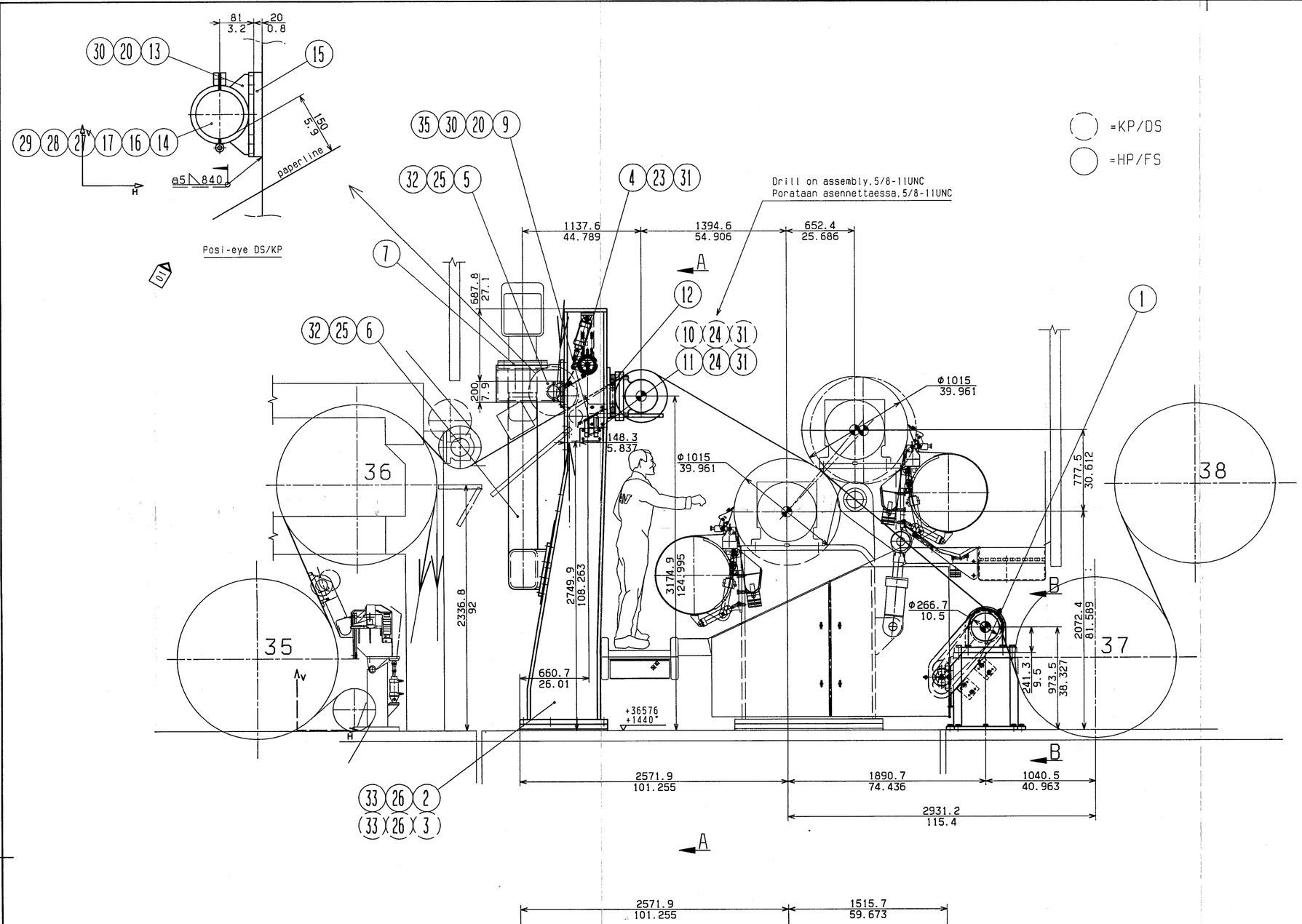

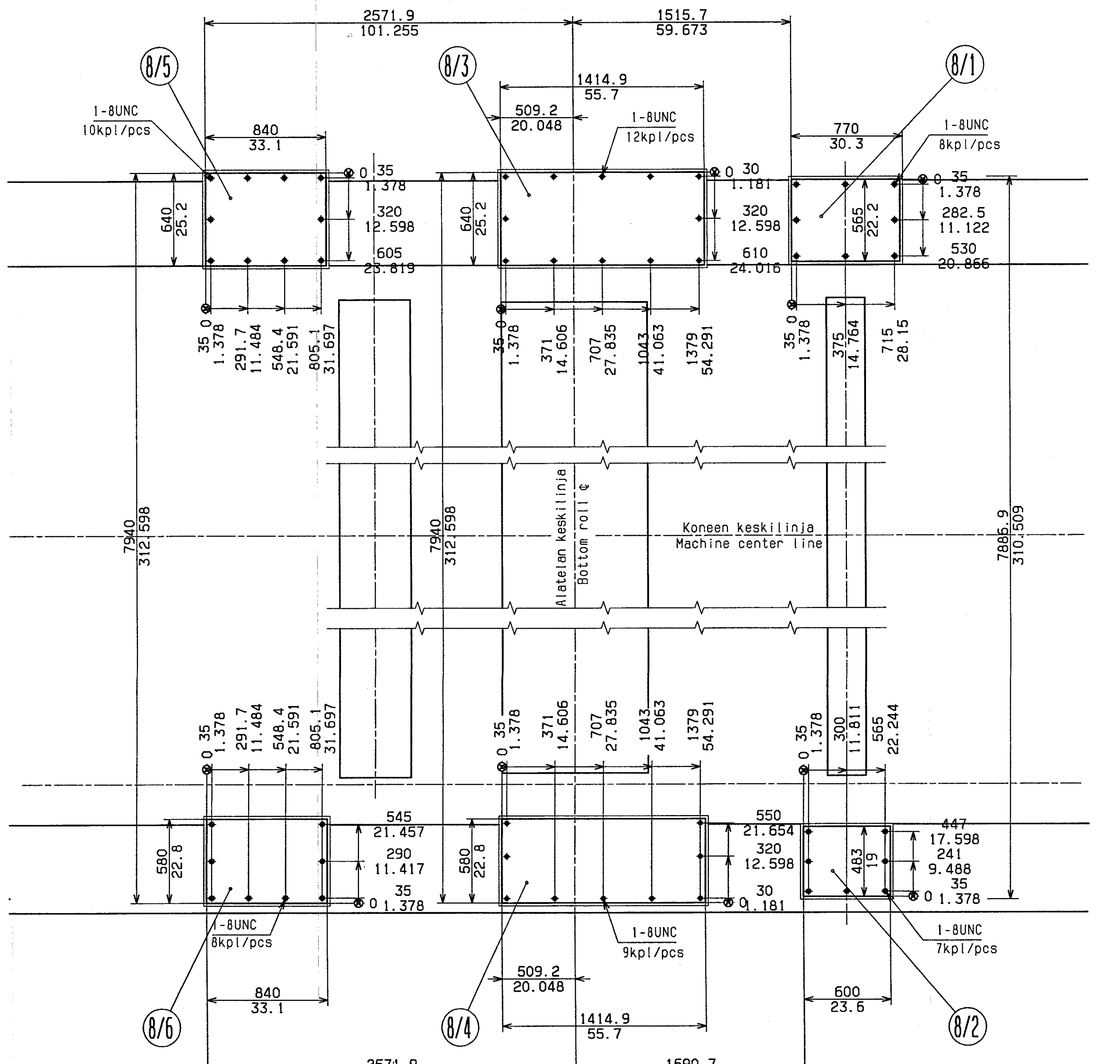

VIEW A-A
SUUNTA A-A

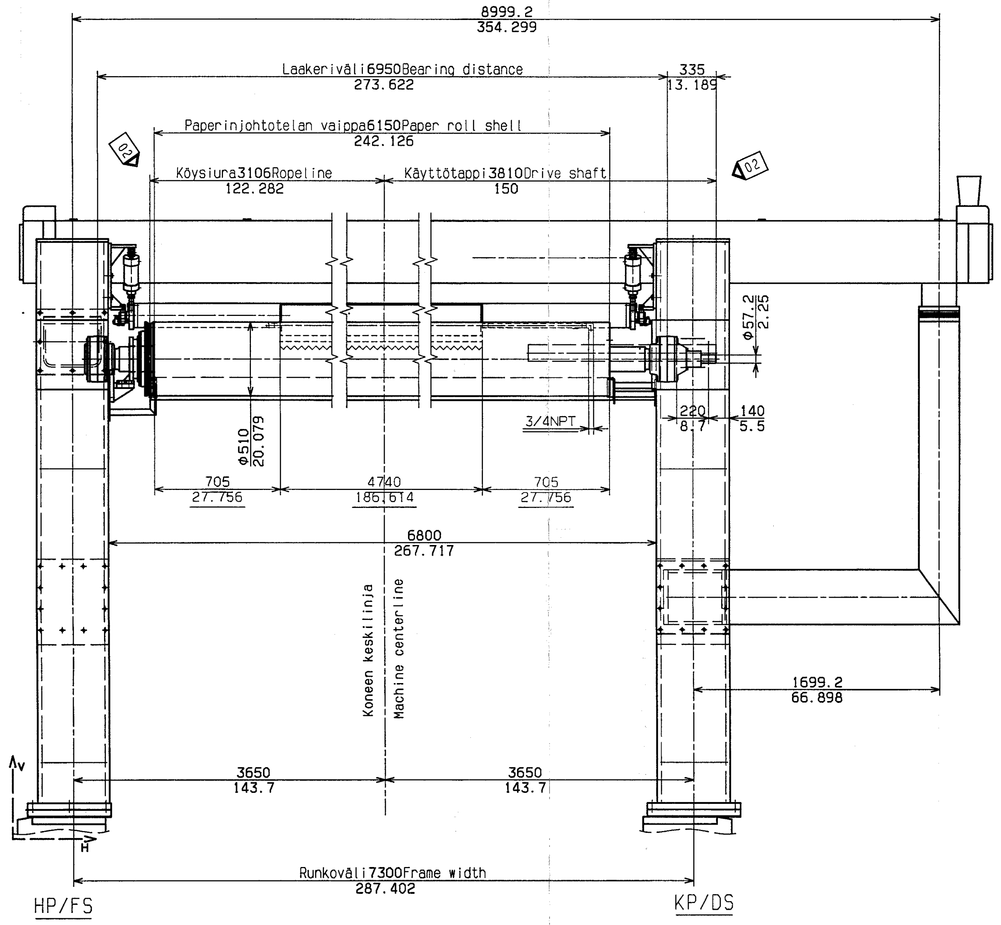

VIEW B-B
SUUNTA B-B

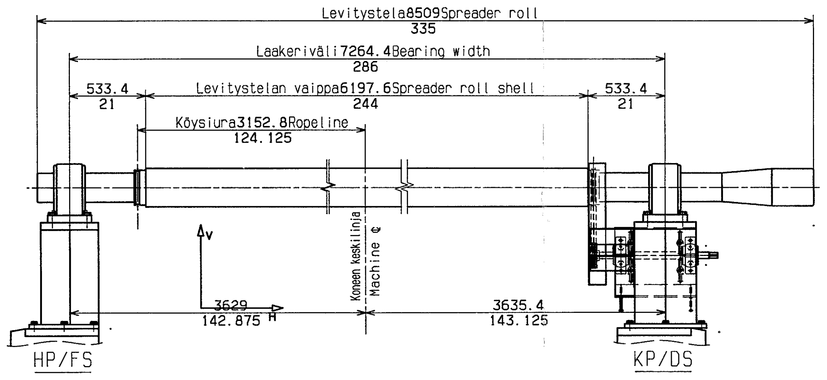

KIRISTYSMOMENTIT

Teräsruuvit ja mutterit
ANSI 18.2.1, ANSI B 18.3

Kierre	8.8 Zne 1)		A4-80 2)		A4-70 2)	
	Nm	Ft-lbs	Nm	Ft-lbs	Nm	Ft-lbs
1/4 UNC	10	8	10	7		
5/16 UNC	23	17	22	15		
3/8 UNC	42	30	38	28		
1/2 UNC	100	73	89	65		
5/8 UNC	200	145	175	130		
3/4 UNC	350	260	315	230		
7/8 UNC	560	410	500	365		
1 UNC	825	610	730	540		
1 1/8 UNC	1640	1210			1210	895
1 1/4 UNC	2850	2100			1680	1240

1) kuiva
2) Ensisijaisesti Molykote 1000/ Molykote HSC Plus
Korvaavana esim. Chesterton 785, Loctite 8155
Hirange (liikkuvoroin aina pienempi kuin 0,20)
KALIBROITU KIRISTYSTYÖKALU

TIGHTENING TORQUES

Steel bolts and nuts
ANSI 18.2.1, ANSI B 18.3

Nominal size	8.8 Zne 1)		A4-80 2)		A4-70 2)	
	Nm	Ft-lbs	Nm	Ft-lbs	Nm	Ft-lbs
1/4 UNC	10	8	10	7		
5/16 UNC	23	17	22	15		
3/8 UNC	42	30	38	28		
1/2 UNC	100	73	89	65		
5/8 UNC	200	145	175	130		
3/4 UNC	350	260	315	230		
7/8 UNC	560	410	500	365		
1 UNC	825	610	730	540		
1 1/8 UNC	1640	1210			1210	895
1 1/4 UNC	2850	2100			1680	1240

1) Non-lubricated threads
2) Primarily Molykote 1000 and Molykote HSC Plus
Alternatively Chesterton 785, Hirange, Loctite 8155 (coefficient of friction smaller than 0.20)
CALIBRATED TORQUE WRENCHES

VALMET CERTIFIED 19 10 DATE

642-020-010

PART	DESCRIPTION	DIMENSIONS	MATERIAL	DRAWING	REV'D	NOTES

GENERAL TOLERANCES, DIMENSIONS WITHOUT INDIVIDUAL TOLERANCE INDICATIONS
MACHINING: ISO 2768-mK (SFS-EN 22768-1, SFS-EN 22768-2)
WELDING: EN 8675-06 (EN 25817), (EN 4570 13)
GRADE OF WELDING: C (EN 25817, ISO 5817)
WELDING QUALITY LEVEL C: (SFS-EN 25817, ISO 5817)

GPAS61 FI EN

GEORGIA-PACIFIC CORP.
ASHDOWN, ARKANSAS, USA

VALMET | PROJECTION | SCALE 1:20 | WEIGHT kg 7950

PRODUCT: SymSizer

98-10-14	T.Laingella	Marking plate added	03	DRAWN J.Suhonen(EM)	DATE 98-09-04
98-10-06	J.Suhonen	Paper guide roll moved 1,97"(50mm) to drive side.	02	CHECKED T.Piirainen(EM)	DATE 98-09-10
98-09-29	J.Suhonen	Added parts 13,14,15,16,17,27,28,29.	01	APPD	DATE
DATE	NAME	DWG	REVISION	CHSKY	

ACCESSORIES ASSEMBLY DRAWING

REF. 603534 | FILE | NAME | SIZE A0 | CATIA | DRAWING ID RAU9500267.03 | SHEET

THE INFORMATION CONTAINED HEREIN IS PROPRIETARY TO VALMET AND IS NOT TO BE REPRODUCED OR USED WITHOUT THE EXPRESS WRITTEN PERMISSION OF VALMET